VIN PLATE DECODING INFORMATION

1	2	3	4	5	6	7	8	9	10	11	12 thru 17
WMI	**WMI**	**WMI**	**Other**	**Model**	**Model**	**Engine, Brake**	**Engine, Brake**	**Check Digit**	**Model Year**	**Assy. Plant**	**Sequence No.**

The following table interprets the VIN Plate position shown above.

Position	Interpretation	Codes = Description
1	World Manfacturer Identification	W = DaimlerChrysler AG
2	World Manufacturer Identification	D = Sprinter
3	World Manufacturer Identification	1 = Sprinter Chassis-Cab 2 = Sprinter Truck 5 = Sprinter Multipurpose Passenger Vehicle
4	Chassis Configuration	B = 4X4 - Canada P = 4X2 - U.S.
5	Model, Wheelbase, GVWR	D = Combine with position 6
6	Model, Wheelbase, GVWR	1 = 2500C/C2500/P2500 3000 mm 15 in. wheel 8,001 - 9,000 lbs. Class G 2 = 2500C/C2500/P2500 3550 mm 15 in. wheel 8,001 - 9,000 lbs. Class G 3 = 2500C/C2500/P2500 4025 mm 15 in. wheel 8,001 - 9,000 lbs. Class G 4 = 3500C/C3500 3550 mm 15 in. wheel 9,001 - 10,000 lbs. Class H 5 = 3500C/C3500 4025 mm 15 in. wheel 9,001 - 10,000 lbs. Class H 6 = 2500C/C2500/P2500 3567 mm 16in. wheel 8,001 - 9,000 lbs. Class G 7 = 2500C/C2500/P2500 4042 mm 16in. wheel 8,001 - 9,000 lbs. Class G
7	Engine, Brake	4 = Combine with position 8
8	Engine, Brake	3 = 2.7L 45 State Diesel, Hydraulic Brakes 4 = 2.7L 50 State Diesel, Hydraulic Brakes
9	Check Digit	0 = Check Digit 0 = Check Digit 0 = Check Digit
10	Model Year	4 = 2004 5 = 2005
11	Assembly Plant	5 = Dusseldorf
12 thru 17	Vehicle Build Sequence	Model Year Assembly Sequence

Group - 2

Front Suspension & Drive

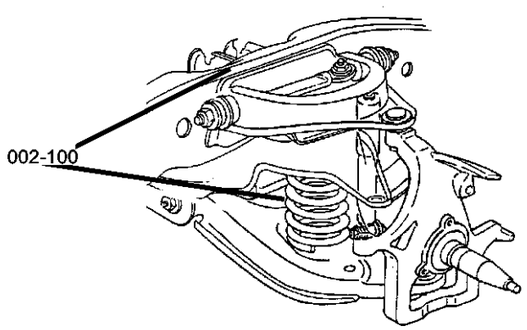

002-100 Front Suspension 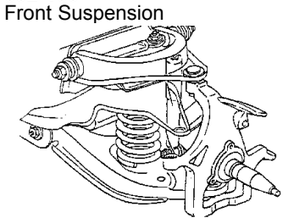			

Group - 2 Front Suspension & Drive

Illustration Title — Group-Fig. No.

Front Suspension

Front Control Arms, Knuckles, Bearings and Hubs ..... Fig. 2 - 110
Front Shocks ..... Fig. 2 - 120
Front Stabilzer Bar ..... Fig. 2 - 130
Front Spring ..... Fig. 2 - 140

Front Control Arms, Knuckles, Bearings and Hubs
Figure 2-110

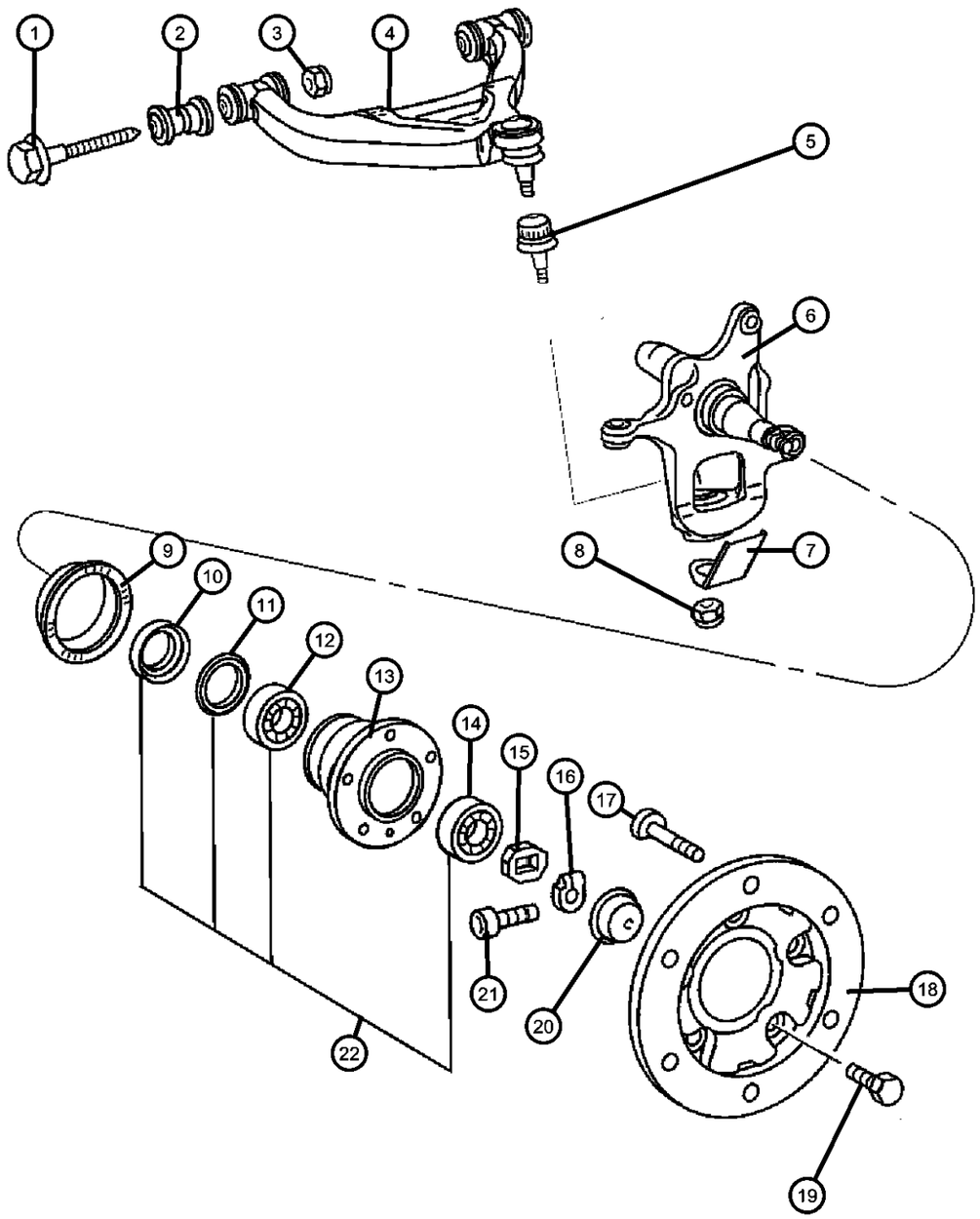

ITEM	PART NUMBER	QTY	LINE	SERIES	BODY	ENGINE	TRANS	TRIM	DESCRIPTION
Note: Sales Codes									
Note:On Up To and From parts, you will have to refer to the Vehicle Data Card.									
[DGJ]=TRANSMISSION - 5-SPD AUTO, W5A3									
[BGK]= 4-WHEEL ANTI-LOCK									
1	05133819AA	4							BOLT, Hex Head
2	05133818AA	2	2, 3, 6, 7						BUSHING, Control Arm
3									NUT
	06104719AA	2	2, 6	L	51, 52, 54, 55, 56				
		2	3, 7	L	12, 15, 16				
		2	2, 6	L	01, 02, 06				
		2	2, 6	L	11, 12, 14, 15, 16				
4									ARM, Lower Control, Front
	05104578AA	1	2, 3, 6, 7						Left
	05136057AA	1	2, 3, 6, 7						Right
	05137552AA	1	2, 3, 6, 7	L					Right
	05137632AA	1	2, 3, 6, 7	L					Left
5	05139559AA	2							BALL JOINT, Lower Control Arm
6									KNUCKLE, Front
	05135233AA	1	2, 6	L	51, 52, 54, 55, 56				Left
	05104579AA	1	3, 7						For Wabco and Bosch Calipers, Left
	05135232AA	1	2, 6	L	11, 12, 14, 15, 16				Right
		1	2, 6	L	51, 52, 54, 55, 56				Right
		1	2, 6	L	01, 02, 06				Right
		1	3, 7	L	02, 06				With Special Version [504032 / 10], Right
		1	2, 6	L	11, 12, 14, 15, 16				Left
		1	2, 6	L	01, 02, 06				Left

SPRINTER (VA)

SERIES	LINE	BODY	ENGINE	TRANSMISSION
L = LOWLINE	3 = HD DODGE 2WD 6 = Lt. Duty DODGE 4WD 2 = Med. Duty DODGE 2WD 7 = Med. Duty DODGE 4WD	55 = Wagon 140" 54 = Wagon 118" 52 = Wagon 140" 51 = Wagon 118" 12 = Van 140" 11 = Van 118" 06 = Front Section 158" 14 = Van 118" 15 = Van 140" 16 = Van 158" 56 = Wagon 158" 01 = Chassis Forward Control 118" 02 = Chassis Forward Control 140"	EX8 = Engine-2.7L I5 Mercedes Turbo Diesel	DGJ = Transmission-5-Spd. Automatic,W5A580

Front Control Arms, Knuckles, Bearings and Hubs
Figure 2-110

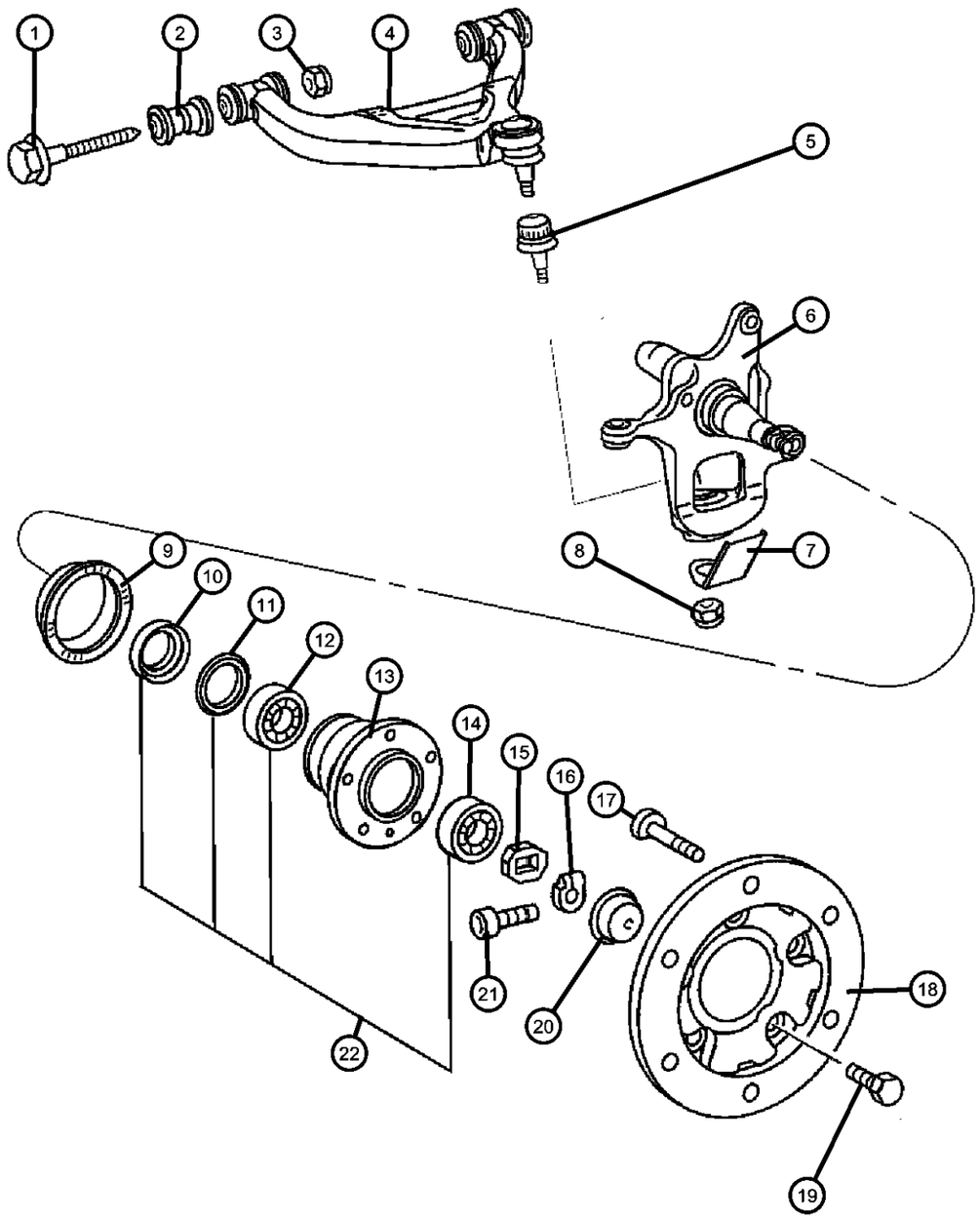

ITEM	PART NUMBER	QTY	LINE	SERIES	BODY	ENGINE	TRANS	TRIM	DESCRIPTION
		1	3, 7	L	02, 06				With Special Version [504032 / 09], Left
	05139492AA	1	3, 7						For Wabco and Bosch Calipers, Right
7	05136122AA	2							PLATE, Control Arm
8	05136123AA	1	2, 3, 6, 7						NUT, Ball Joint
9	05139358AA	2							RING, Tone
10	05103901AA	2							SEAL, Hub
11	05139359AA	2							SEAL, Wheel Hub
12	05103779AA	2							BEARING, AxleInner
13									HUB, Front Wheel
	05139360AA	2							From Front Axle S482214/Y422060
	05104556AA	2							Up To Front Axle S482213/Y422059
14	05103869AA	2							BEARING, AxleOuter
15	05103956AA	2							WASHER, Thrust, Front
16	05097843AA	2							NUT
17	05139905AA	12	3, 7						BOLT
18	05139903AA	2	3, 7						FLANGE, Axle Output
19	06104258AA	12	3, 7	L	12, 15, 16				SCREW, Hex Flange Head
20	05103914AA	2							CAP, Wheel Hub Grease
21	05104617AA	2							SCREW
22									HUB AND BEARING PACKAGE, Kit
	05103579AA	1							From Front Axle S231916/Y245977
	05139357AA	1							Up To Front Axle 231915/Y245976

SPRINTER (VA)

SERIES	LINE	BODY	ENGINE	TRANSMISSION
L = LOWLINE	3 = HD DODGE 2WD 6 = Lt. Duty DODGE 4WD 2 = Med. Duty DODGE 2WD 7 = Med. Duty DODGE 4WD	55 = Wagon 140" 54 = Wagon 118" 52 = Wagon 140" 51 = Wagon 118" 12 = Van 140" 11 = Van 118" 06 = Front Section 158" 14 = Van 118" 15 = Van 140" 16 = Van 158" 56 = Wagon 158" 01 = Chassis Forward Control 118" 02 = Chassis Forward Control 140"	EX8 = Engine-2.7L I5 Mercedes Turbo Diesel	DGJ = Transmission-5-Spd. Automatic,W5A580

Front Shocks
Figure 2-120

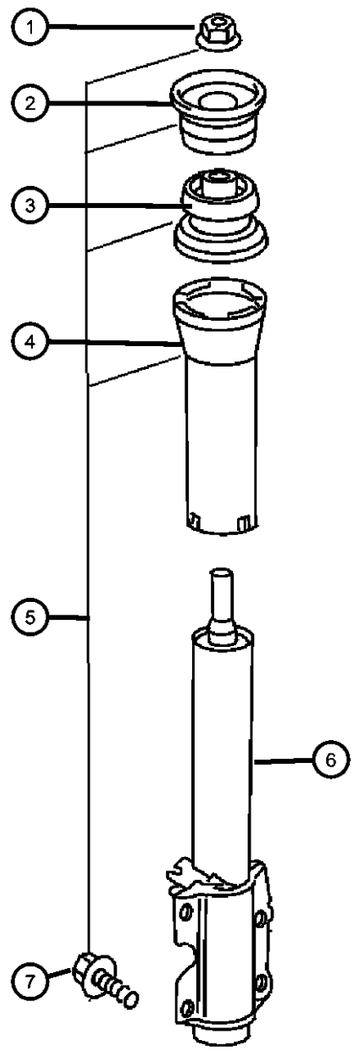

ITEM	PART NUMBER	QTY	LINE	SERIES	BODY	ENGINE	TRANS	TRIM	DESCRIPTION
Note: Sales Codes: [SHA]=Stabilizer Bar - Front [3AT]=Rear Springs Weight 3.88T									
1									NUT
	05125762AA	2	2, 6	L	01, 02, 06				
		2	2, 6	L	11, 12, 14, 15, 16				
		2	2, 6	L	51, 52, 54, 55, 56				
		2	3, 7	L	12, 15, 16				
2									BUSHING, Shock Absorber
	05118718AA	2	2, 6	L	01, 02, 06				
		2	2, 6	L	11, 12, 14, 15, 16				
		2	2, 6	L	51, 52, 54, 55, 56				
		2	3, 7	L	12, 15, 16				
3									BUSHING, Shock Absorber
	05118722AA	2	2, 6	L	01, 02, 06				
		2	2, 6	L	11, 12, 14, 15, 16				
		2	2, 6	L	51, 52, 54, 55, 56				
		2	3, 7	L	12, 15, 16				
4									SHIELD, Shock Absorber Dust
	05118728AA	2	2, 6	L	01, 02, 06				
		2	2, 6	L	11, 12, 14, 15, 16				
		2	2, 6	L	51, 52, 54, 55, 56				
		2	3, 7	L	02, 06				
		2	3, 7	L	12, 15, 16				
5									PARTS KIT, Shock
	05133869AA	2	2, 6	L	01, 02, 06				

SPRINTER (VA)

SERIES	LINE	BODY	ENGINE	TRANSMISSION
L = LOWLINE	3 = HD DODGE 2WD 6 = Lt. Duty DODGE 4WD 2 = Med. Duty DODGE 2WD 7 = Med. Duty DODGE 4WD	55 = Wagon 140" 54 = Wagon 118" 52 = Wagon 140" 51 = Wagon 118" 12 = Van 140" 11 = Van 118" 06 = Front Section 158" 14 = Van 118" 15 = Van 140" 16 = Van 158" 56 = Wagon 158" 01 = Chassis Forward Control 118" 02 = Chassis Forward Control 140"	EX8 = Engine-2.7L I5 Mercedes Turbo Diesel	DGJ = Transmission-5-Spd. Automatic,W5A580

Front Shocks
Figure 2-120

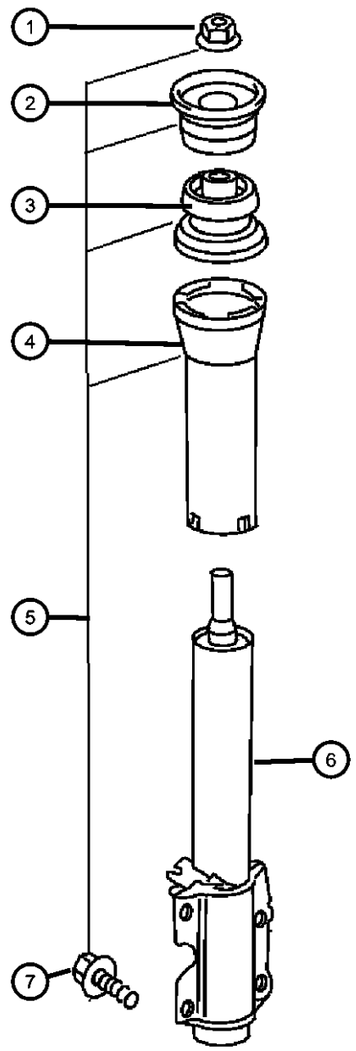

ITEM	PART NUMBER	QTY	LINE	SERIES	BODY	ENGINE	TRANS	TRIM	DESCRIPTION
		2	2, 6	L	11, 12, 14, 15, 16				Includes Items 1,2,3,4,7
		2	2, 6	L	51, 52, 54, 55, 56				Includes Items 1,2,3,4,7
		2	3, 7	L	12, 15, 16				Includes Items 1,2,3,4,7
6									ABSORBER, Shock
	05104063AA	2	2, 6	L					Shock Only
	05128502AA	1	3, 7	L	12, 15, 16				Shock Only
	05139548AA	2	2, 6						Shock Only [3AT,SHA]
7	05125699AA	8							SCREW, Strut to Knuckle, Mounting

SPRINTER (VA)

SERIES	LINE	BODY	ENGINE	TRANSMISSION
L = LOWLINE	3 = HD DODGE 2WD 6 = Lt. Duty DODGE 4WD 2 = Med. Duty DODGE 2WD 7 = Med. Duty DODGE 4WD	55 = Wagon 140" 54 = Wagon 118" 52 = Wagon 140" 51 = Wagon 118" 12 = Van 140" 11 = Van 118" 06 = Front Section 158" 14 = Van 118" 15 = Van 140" 16 = Van 158" 56 = Wagon 158" 01 = Chassis Forward Control 118" 02 = Chassis Forward Control 140"	EX8 = Engine-2.7L I5 Mercedes Turbo Diesel	DGJ = Transmission-5-Spd. Automatic,W5A580

AR = use ase required - = Non illustrrated part

Front Stabilzer Bar
Figure 2-130

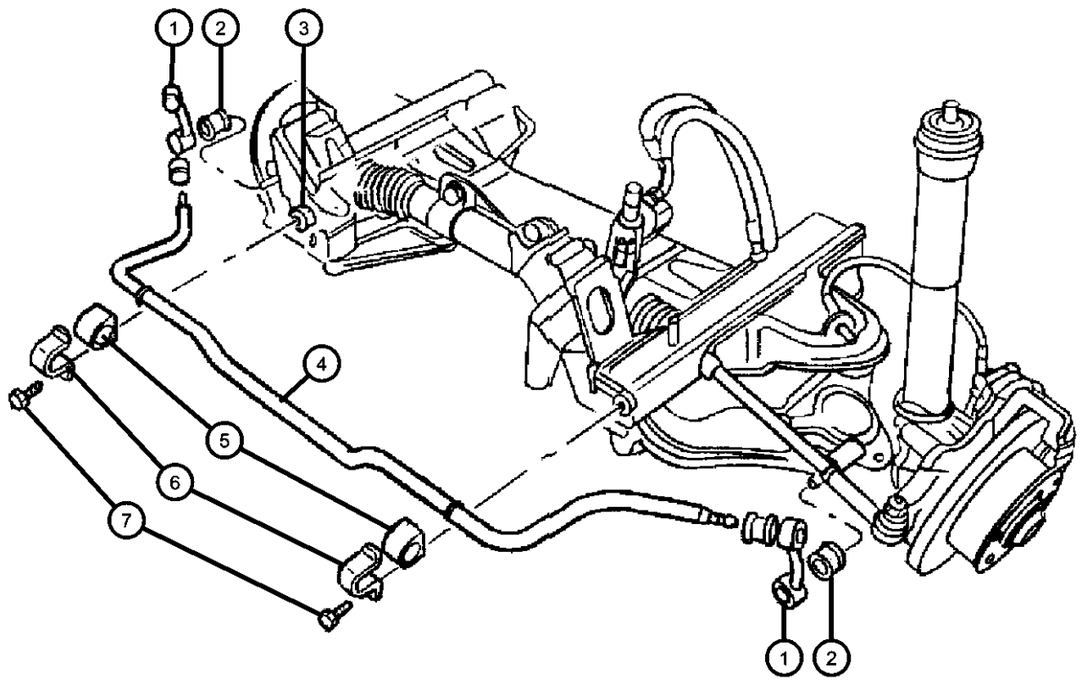

ITEM	PART NUMBER	QTY	LINE	SERIES	BODY	ENGINE	TRANS	TRIM	DESCRIPTION
1									LINK, Stabilizer Bar
	05104059AA	1	2, 6	L	01, 02, 06				Left
		1	2, 6	L	11, 12, 14, 15, 16				Left
		1	2, 6	L	51, 52, 54, 55, 56				Left
	05104060AA	1	2, 6	L	01, 02, 06				Right
		1	2, 6	L	11, 12, 14, 15, 16				Right
		1	2, 6	L	51, 52, 54, 55, 56				Right
2									BUSHING
	05104066AA	4	2, 6	L	01, 02, 06				Torsion Bar to Control Arm
		4	2, 6	L	11, 12, 14, 15, 16				Torsion Bar to Control Arm
		4	2, 6	L	51, 52, 54, 55, 56				Torsion Bar to Control Arm
3									NUT
	05104677AA	2	2, 6	L	01, 02, 06				
		2	2, 6	L	11, 12, 14, 15, 16				
		2	2, 6	L	51, 52, 54, 55, 56				
4									BAR, Front Sway
	05104576AA	1	2, 6	L	01, 02, 06				
		1	2, 6	L	11, 12, 14, 15, 16				
		1	2, 6	L	51, 52, 54, 55, 56				
5									BUSHING, Stabilizer Bar
	05104577AA	2	2, 6	L	01, 02, 06				Torsion Bar to Front Axle
		2	2, 6	L	11, 12, 14, 15, 16				Torsion Bar to Front Axle
		2	2, 6	L	51, 52, 54, 55, 56				Torsion Bar to Front Axle

SPRINTER (VA)

SERIES	LINE	BODY	ENGINE	TRANSMISSION
L = LOWLINE	3 = HD DODGE 2WD 6 = Lt. Duty DODGE 4WD 2 = Med. Duty DODGE 2WD 7 = Med. Duty DODGE 4WD	55 = Wagon 140" 54 = Wagon 118" 52 = Wagon 140" 51 = Wagon 118" 12 = Van 140" 11 = Van 118" 06 = Front Section 158" 14 = Van 118" 15 = Van 140" 16 = Van 158" 56 = Wagon 158" 01 = Chassis Forward Control 118" 02 = Chassis Forward Control 140"	EX8 = Engine-2.7L I5 Mercedes Turbo Diesel	DGJ = Transmission-5-Spd. Automatic,W5A580

Front Stabilzer Bar
Figure 2-130

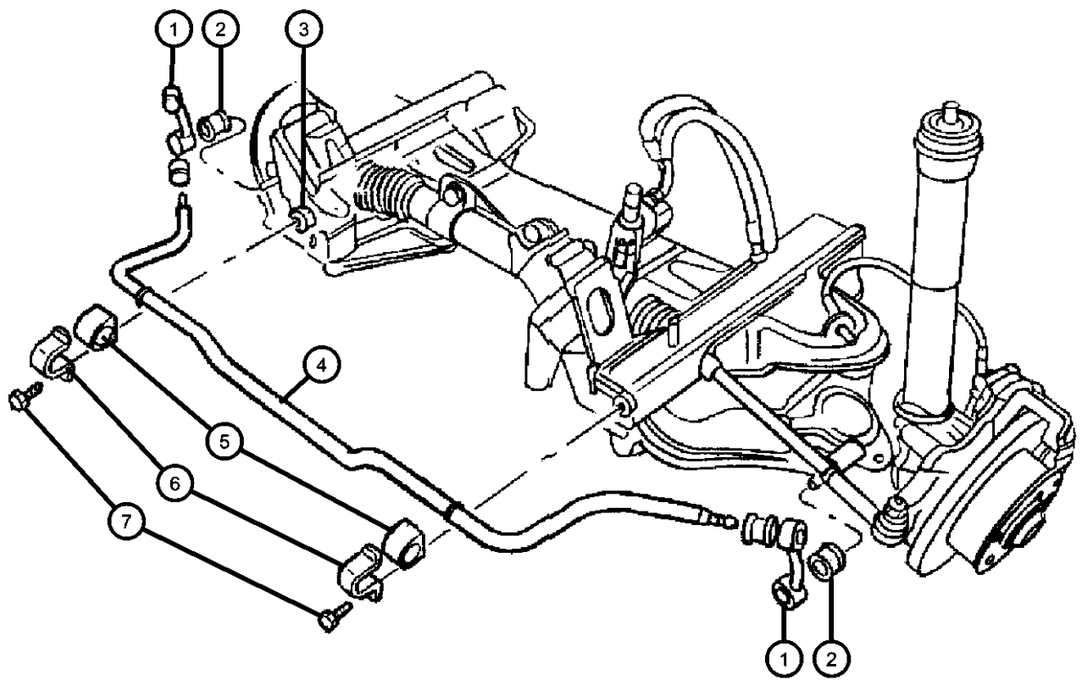

ITEM	PART NUMBER	QTY	LINE	SERIES	BODY	ENGINE	TRANS	TRIM	DESCRIPTION
6									RETAINER, Stabilizer Bar Grommet
	05104067AA	2	2, 6	L	01, 02, 06				
		2	2, 6	L	11, 12, 14, 15, 16				
		2	2, 6	L	51, 52, 54, 55, 56				
7									BOLT
	05104656AA	2	2, 6	L	01, 02, 06				
		2	2, 6	L	11, 12, 14, 15, 16				
		2	2, 6	L	51, 52, 54, 55, 56				

SPRINTER (VA)

SERIES	LINE	BODY	ENGINE	TRANSMISSION
L = LOWLINE	3 = HD DODGE 2WD 6 = Lt. Duty DODGE 4WD 2 = Med. Duty DODGE 2WD 7 = Med. Duty DODGE 4WD	55 = Wagon 140" 54 = Wagon 118" 52 = Wagon 140" 51 = Wagon 118" 12 = Van 140" 11 = Van 118" 06 = Front Section 158" 14 = Van 118" 15 = Van 140" 16 = Van 158" 56 = Wagon 158" 01 = Chassis Forward Control 118" 02 = Chassis Forward Control 140"	EX8 = Engine-2.7L I5 Mercedes Turbo Diesel	DGJ = Transmission-5-Spd. Automatic,W5A580

Front Spring
Figure 2-140

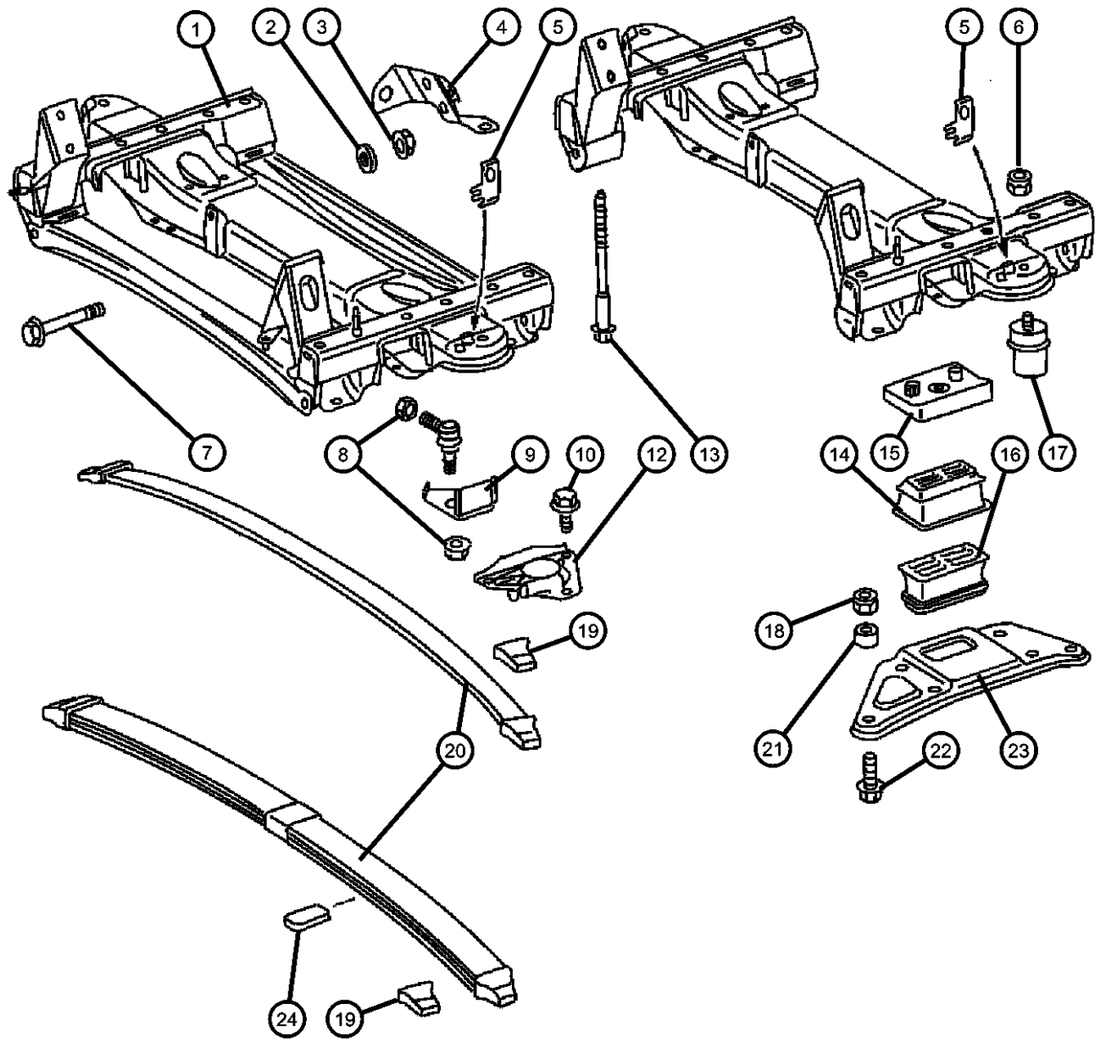

ITEM	PART NUMBER	QTY	LINE	SERIES	BODY	ENGINE	TRANS	TRIM	DESCRIPTION
Note: Sales Codes									
Note:On Up To and From parts, you will have to refer to the Vehicle Data Card.									
Note:On SV#'s [Special Version codes], refer to the Vehicle Data Card.									
1									CROSSMEMBER, Front Axle
	05139740AA	1							
	05104074AA	1	2, 6						
2	05104074AA	1							WASHER, (NOT SERVICED)
3									NUT
	06104718AA	2	2, 6	L	01, 02, 06				
		2	2, 6	L	11, 12, 14, 15, 16				
		2	2, 6	L	51, 52, 54, 55, 56				
4	05119553AA	1							BRACKET, Steering Gear
5	05119553AA	1							BRACKET, (NOT SERVICED)
6									NUT
	05132896AA	6	2, 6	L	11, 12, 14, 15, 16				
		6	2, 6	L	51, 52, 54, 55, 56				
7	05125714AA	4							SCREW
8									NUT
	05125761AA	2	2, 6	L	01, 02, 06				
		2	2, 6	L	51, 52, 54, 55, 56				
	05132896AA	6	2, 6	L	11, 12, 14, 15, 16				
		6	2, 6	L	51, 52, 54, 55, 56				
		2	2, 6	L	11, 12, 14, 15, 16				
9									PLATE, Backing
	05119249AA	2	2, 6	L	51, 52, 54, 55, 56				

SPRINTER (VA)

SERIES	LINE	BODY	ENGINE	TRANSMISSION
L = LOWLINE	3 = HD DODGE 2WD 6 = Lt. Duty DODGE 4WD 2 = Med. Duty DODGE 2WD 7 = Med. Duty DODGE 4WD	55 = Wagon 140" 54 = Wagon 118" 52 = Wagon 140" 51 = Wagon 118" 12 = Van 140" 11 = Van 118" 06 = Front Section 158" 14 = Van 118" 15 = Van 140" 16 = Van 158" 56 = Wagon 158" 01 = Chassis Forward Control 118" 02 = Chassis Forward Control 140"	EX8 = Engine-2.7L I5 Mercedes Turbo Diesel	DGJ = Transmission-5-Spd. Automatic,W5A580

Front Spring
Figure 2-140

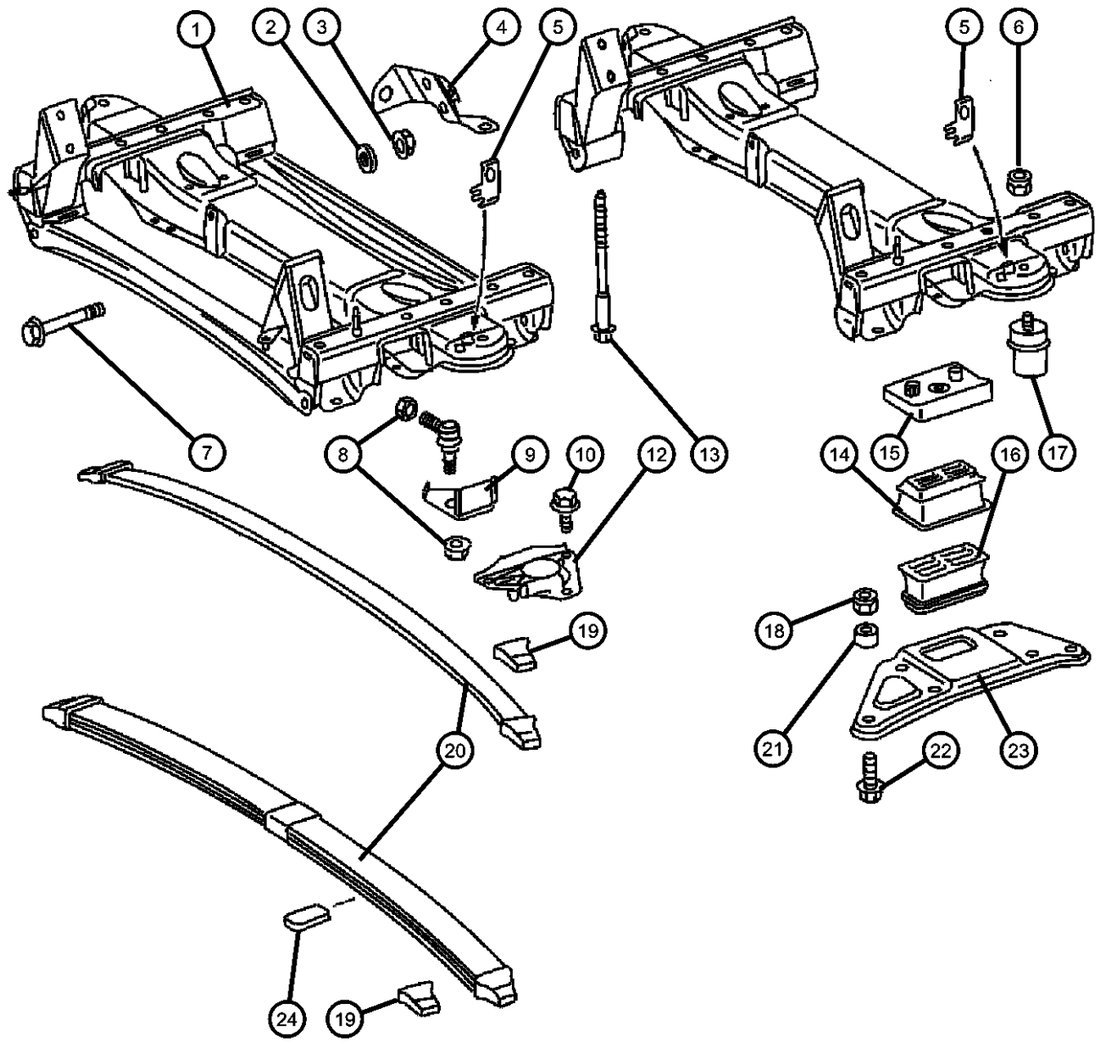

ITEM	PART NUMBER	QTY	LINE	SERIES	BODY	ENGINE	TRANS	TRIM	DESCRIPTION
		2	2, 6	L	01, 02, 06				
		2	2, 6	L	11, 12, 14, 15, 16				
10									BOLT
	05126233AA	6	2, 6	L	51, 52, 54, 55, 56				Without [WDG]
		6	2, 6	L	01, 02, 06				Without [WDG]
		6	2, 6	L	11, 12, 14, 15, 16				Without [WDG]
	06104049AA	6	2, 6	L	11, 12, 14, 15, 16				With [WDG]
		6	2, 6	L	51, 52, 54, 55, 56				With [WDG]
-11									NUT
	05132896AA	6	2, 6	L	11, 12, 14, 15, 16				For Item 10-With [WDG] Only
		6	2, 6	L	51, 52, 54, 55, 56				For Item 10-With [WDG] Only
12									PLATE, Stabilizer Bar
	05104064AA	1	2, 6	L	01, 02, 06				Right
		1	2, 6	L	11, 12, 14, 15, 16				Right
		1	2, 6	L	51, 52, 54, 55, 56				Right
	05118707AA	1	2, 6	L	11, 12, 14, 15, 16				Left
		1	2, 6	L	51, 52, 54, 55, 56				Left
	05118705AA	2	3, 7						Right or Left
		1	2, 6	L	01, 02, 06				Left
13									SCREW AND WASHER, Hex
	05125725AA	8	2, 6	L	01, 02, 06				
		8	2, 6	L	11, 12, 14, 15, 16				

SPRINTER (VA)

SERIES	LINE	BODY	ENGINE	TRANSMISSION
L = LOWLINE	3 = HD DODGE 2WD 6 = Lt. Duty DODGE 4WD 2 = Med. Duty DODGE 2WD 7 = Med. Duty DODGE 4WD	55 = Wagon 140" 54 = Wagon 118" 52 = Wagon 140" 51 = Wagon 118" 12 = Van 140" 11 = Van 118" 06 = Front Section 158" 14 = Van 118" 15 = Van 140" 16 = Van 158" 56 = Wagon 158" 01 = Chassis Forward Control 118" 02 = Chassis Forward Control 140"	EX8 = Engine-2.7L I5 Mercedes Turbo Diesel	DGJ = Transmission-5-Spd. Automatic,W5A580

Front Spring
Figure 2-140

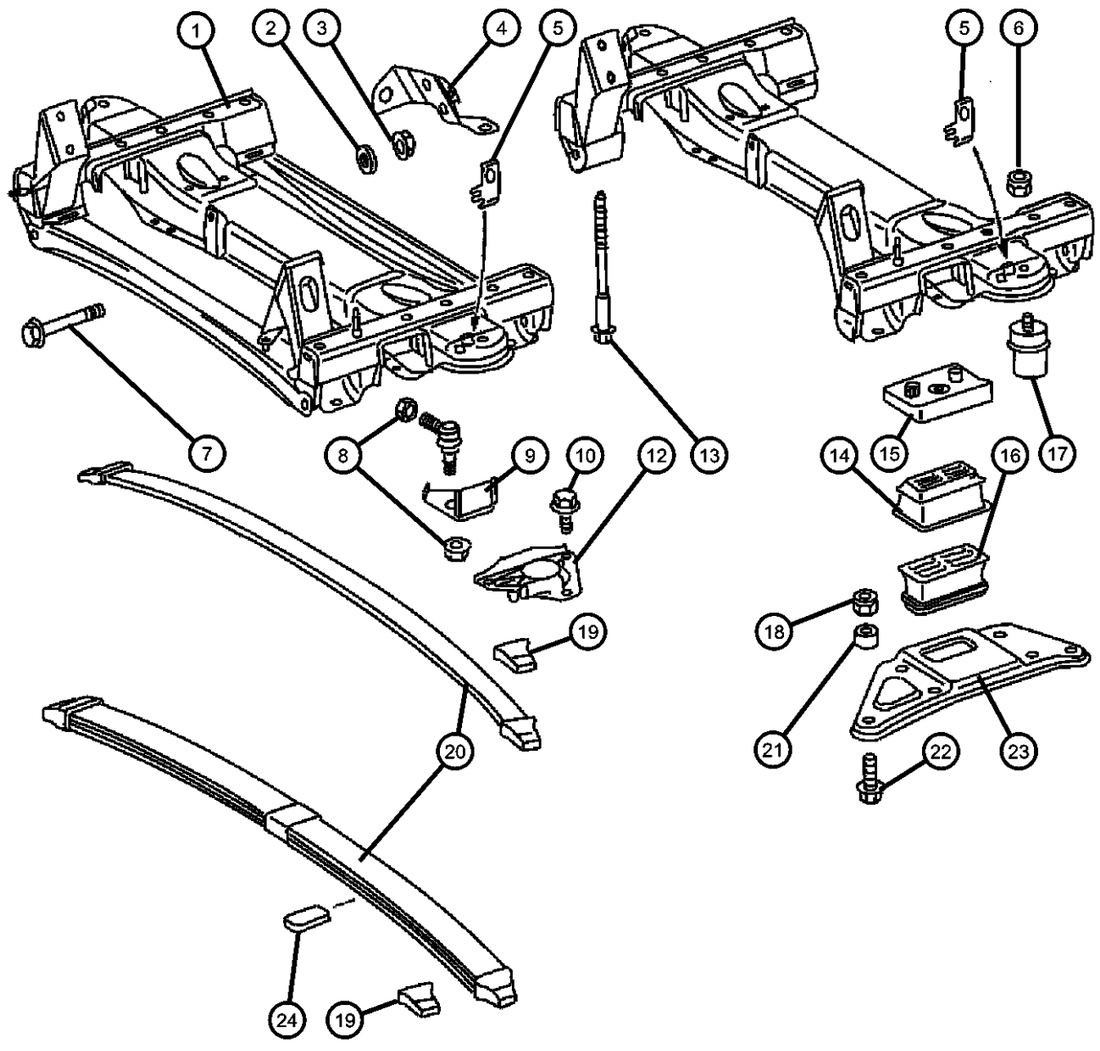

ITEM	PART NUMBER	QTY	LINE	SERIES	BODY	ENGINE	TRANS	TRIM	DESCRIPTION
		8	2, 6	L	51, 52, 54, 55, 56				
14									SEAT, Spring
	05139558AA	2							To Frame With SV#500323/02
	05139190AA	2							To Frame With SV#500323/03
15									SHIM, Spring Seat
	05139554AA	1							Right
	05139552AA	1							Left
16									SEAT, Spring
	05139188AA	1							Left
	05139189AA	1							Right
17	05139555AA	2							BUMPER, Suspension Jounce
18									NUT
	06104717AA	8	2, 6	L	01, 02, 06				M10 x 1.5
		2	2, 6	L	11, 12, 14, 15, 16				M10 x 1.5
		2	2, 6	L	51, 52, 54, 55, 56				M10 x 1.5
		1	3, 7	L	12, 15, 16				M10 x 1.5
	06104718AA	2	2, 6	L	01, 02, 06				M12 x 1.5
		2	2, 6	L	11, 12, 14, 15, 16				M12 x 1.5
		2	2, 6	L	51, 52, 54, 55, 56				M12 x 1.5
		2	3, 7	L	12, 15, 16				M12 x 1.5
19	05139556AA	2							SEAT, Spring
20	05139112AA	1							SPRING, Front Leaf
21	05139737AA	4							BUSHING, Spring
22	06104233AA	4							BOLT, Hex Head, M12 x 1.5 x 25.00
23									PLATE, Suspension
	05139186AA	1							Left

SPRINTER (VA)

SERIES	LINE	BODY	ENGINE	TRANSMISSION
L = LOWLINE	3 = HD DODGE 2WD 6 = Lt. Duty DODGE 4WD 2 = Med. Duty DODGE 2WD 7 = Med. Duty DODGE 4WD	55 = Wagon 140" 54 = Wagon 118" 52 = Wagon 140" 51 = Wagon 118" 12 = Van 140" 11 = Van 118" 06 = Front Section 158" 14 = Van 118" 15 = Van 140" 16 = Van 158" 56 = Wagon 158" 01 = Chassis Forward Control 118" 02 = Chassis Forward Control 140"	EX8 = Engine-2.7L I5 Mercedes Turbo Diesel	DGJ = Transmission-5-Spd. Automatic,W5A580

Front Spring
Figure 2-140

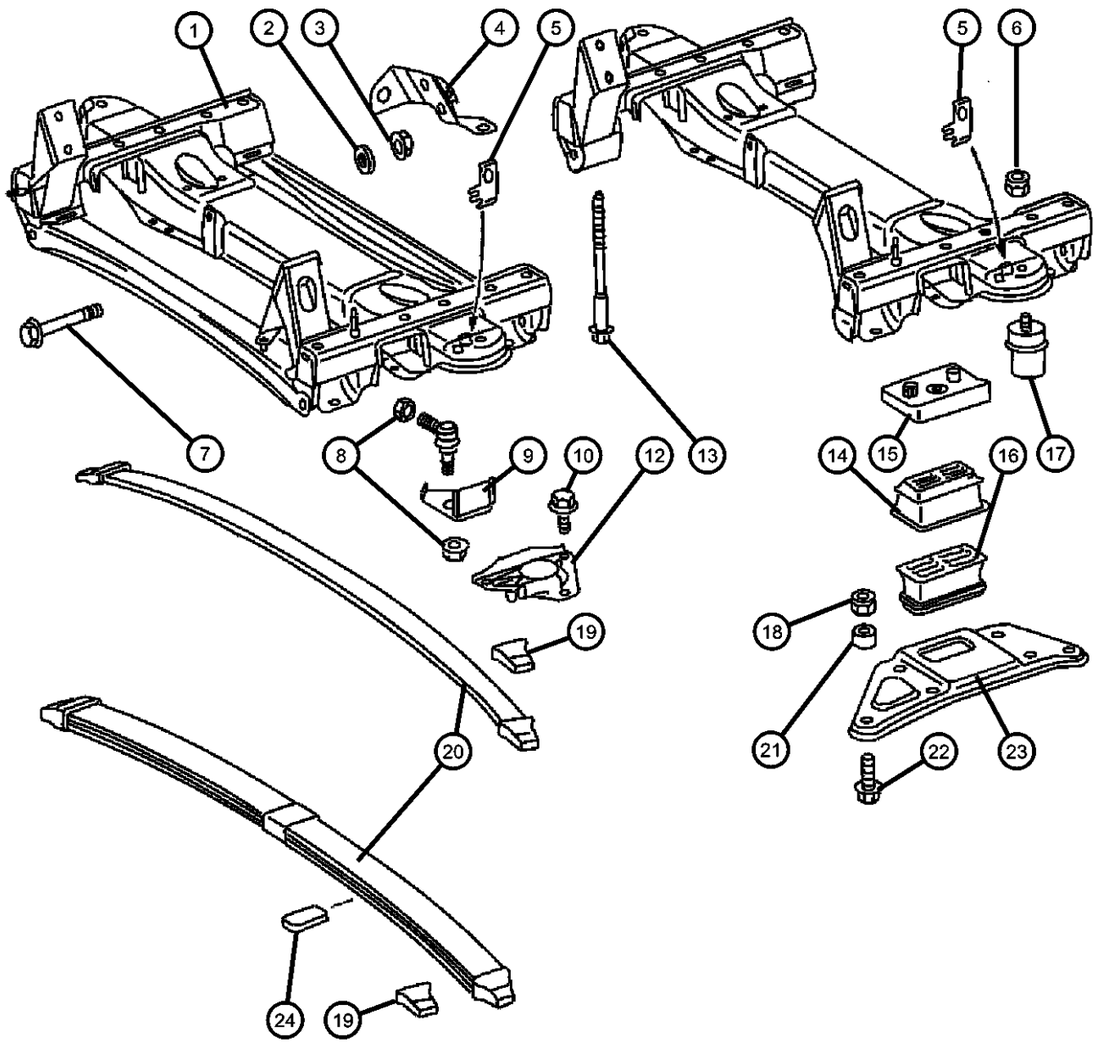

ITEM	PART NUMBER	QTY	LINE	SERIES	BODY	ENGINE	TRANS	TRIM	DESCRIPTION
	05139187AA	1							Right
24	05139187AA	1							SHIM, (NOT SERVICED)

SPRINTER (VA)

SERIES	LINE	BODY	ENGINE	TRANSMISSION
L = LOWLINE	3 = HD DODGE 2WD 6 = Lt. Duty DODGE 4WD 2 = Med. Duty DODGE 2WD 7 = Med. Duty DODGE 4WD	55 = Wagon 140" 54 = Wagon 118" 52 = Wagon 140" 51 = Wagon 118" 12 = Van 140" 11 = Van 118" 06 = Front Section 158" 14 = Van 118" 15 = Van 140" 16 = Van 158" 56 = Wagon 158" 01 = Chassis Forward Control 118" 02 = Chassis Forward Control 140"	EX8 = Engine-2.7L I5 Mercedes Turbo Diesel	DGJ = Transmission-5-Spd. Automatic,W5A580

Group - 3

Rear Axle

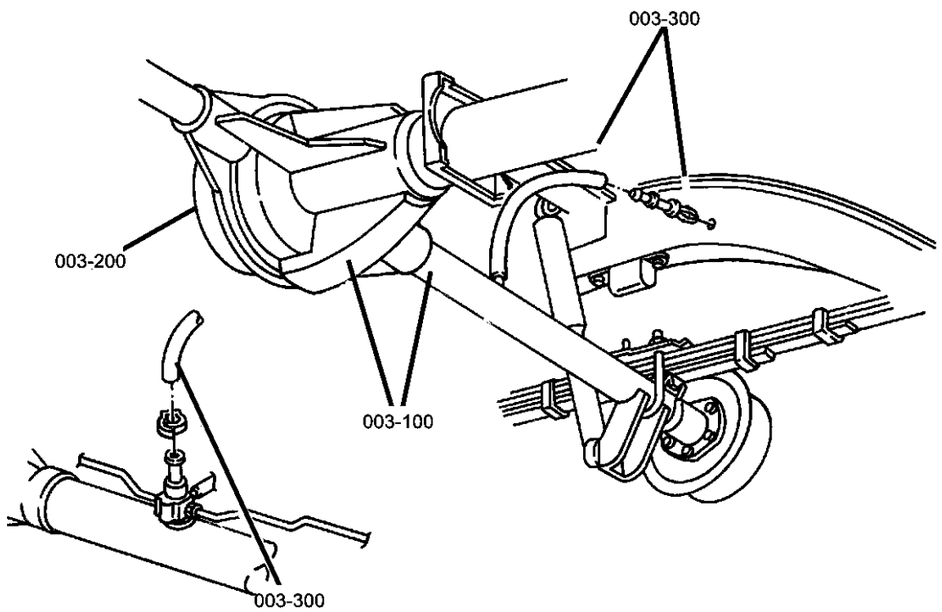

003-100 Rear Axle	003-200 Differential and Housing	003-300 Rear Axle Vent	
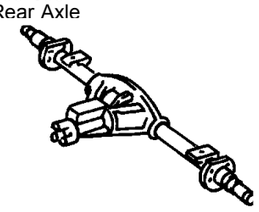	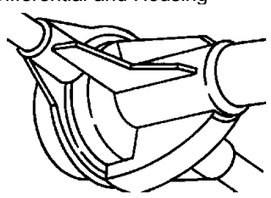	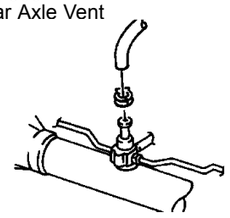	

Group - 3 Rear Axle

Illustration Title — Group-Fig. No.

Rear Axle

Differential Assembly,Rear ..... Fig. 3 - 110

Differential and Housing

Internal Differential Parts,Rear ..... Fig. 3 - 210
Differential Housing,Rear ..... Fig. 3 - 220
Axle Shaft and Wheel Bearings,Single Rear Wheels ..... Fig. 3 - 230
Axle Shaft and Wheel Bearings,Dual Rear Wheels ..... Fig. 3 - 240

Rear Axle Vent

Vent,Rear Axle ..... Fig. 3 - 310

Differential Assembly,Rear
Figure 3-110

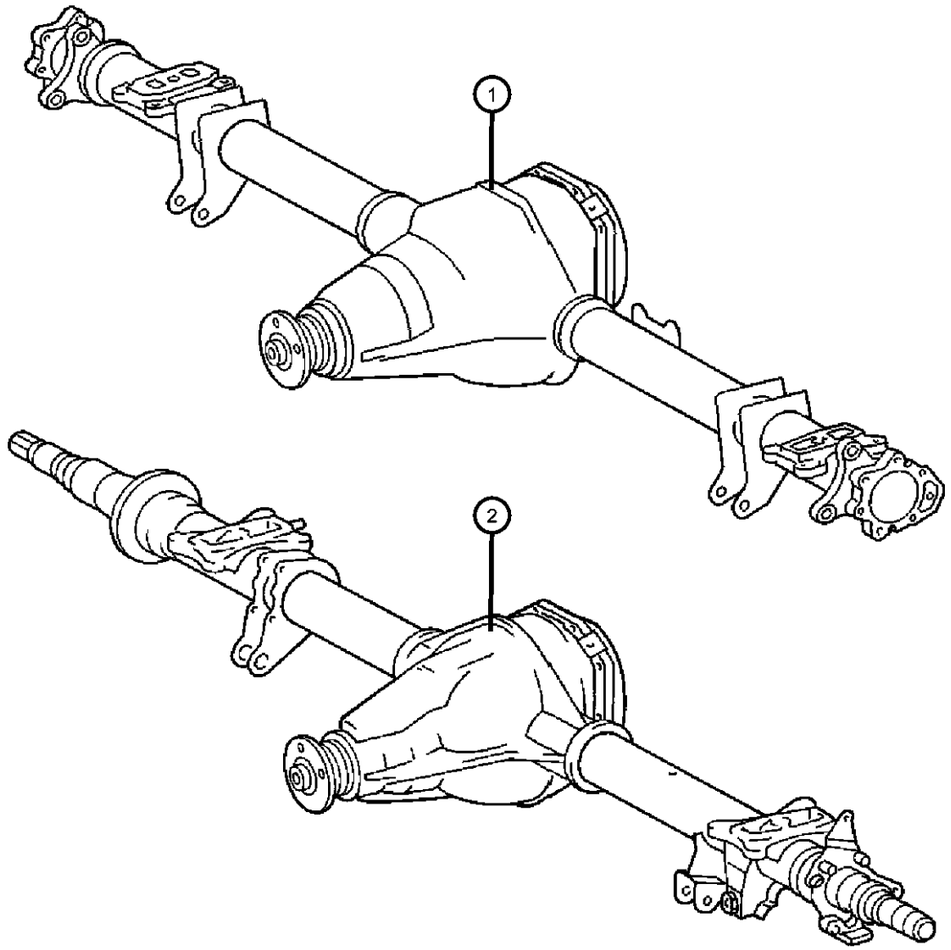

ITEM	PART NUMBER	QTY	LINE	SERIES	BODY	ENGINE	TRANS	TRIM	DESCRIPTION
Note: Sales Codes:									
DRW means Dual Rear Wheels									
SRW means Single Rear Wheels									
[DME]=Axle Ratio - 3.72									
[DMF]=Axle Ratio - 4.11									
1									AXLE, Service Rear
	05137591AA	1	2, 6						[DMF] SRW
	05136033AA								Mopar SAE 90 Gear Lube Quart for Sprinter Axles
	05137755AA	1	2, 6	L					[DME] SRW
	05136033AA								Mopar SAE 90 Gear Lube Quart for Sprinter Axles
2									AXLE, Service Rear
	05135823AA	1	3, 7	L	12, 15, 16				[DME] DRW
	05136033AA								Mopar SAE 90 Gear Lube Quart for Sprinter Axles
	05135928AA	1	3, 7	L					[DMF] DRW
	05136033AA								Mopar SAE 90 Gear Lube Quart for Sprinter Axles

SPRINTER (VA)

SERIES	LINE	BODY	ENGINE	TRANSMISSION
L = LOWLINE	3 = HD DODGE 2WD 6 = Lt. Duty DODGE 4WD 2 = Med. Duty DODGE 2WD 7 = Med. Duty DODGE 4WD	55 = Wagon 140" 54 = Wagon 118" 52 = Wagon 140" 51 = Wagon 118" 12 = Van 140" 11 = Van 118" 06 = Front Section 158" 14 = Van 118" 15 = Van 140" 16 = Van 158" 56 = Wagon 158" 01 = Chassis Forward Control 118" 02 = Chassis Forward Control 140"	EX8 = Engine-2.7L I5 Mercedes Turbo Diesel	DGJ = Transmission-5-Spd. Automatic,W5A580

Internal Differential Parts,Rear
Figure 3-210

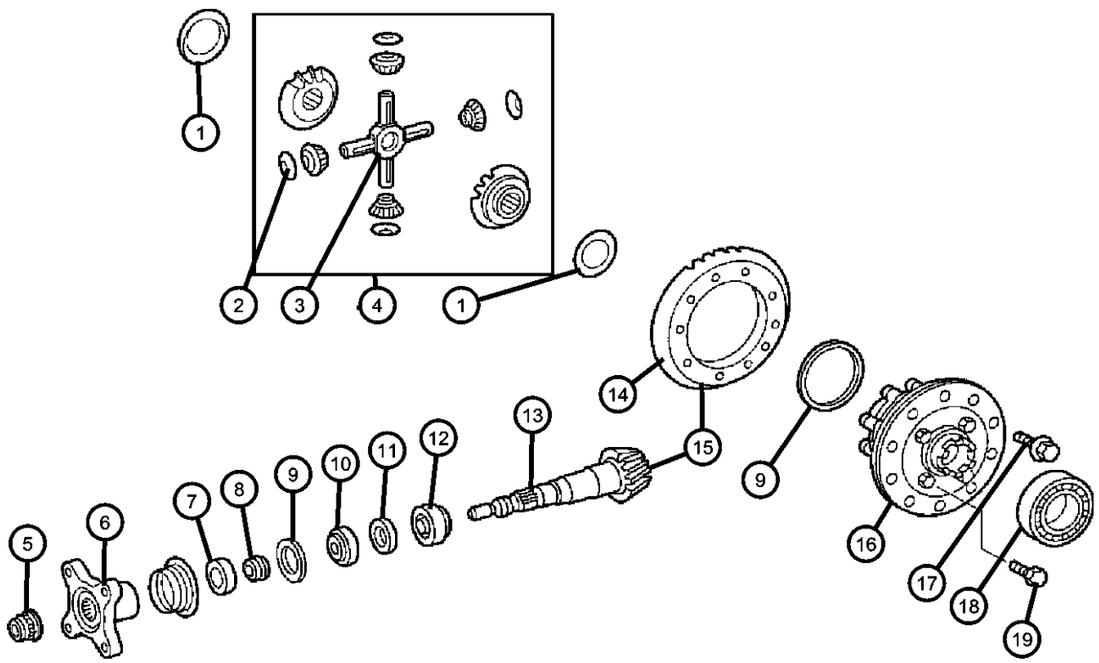

ITEM	PART NUMBER	QTY	LINE	SERIES	BODY	ENGINE	TRANS	TRIM	DESCRIPTION
1									WASHER, Side Gear Thrust
	05136792AA	AR	3, 7	L					1.30 MM Steel
	05136810AA	AR	3, 7	L					1.30 MM Brass
	05136819AA	AR	2, 3, 6, 7	L					1.40 MM Brass
	05136820AA	AR	3, 7	L					1.40 MM Steel
	05136822AA	AR	3, 7	L					1.50 MM Steel
	05136823AA	AR	3, 7	L					1.50 MM Brass
	05136826AA	AR	3, 7	L					1.60 MM Steel
	05136841AA	AR	3, 7	L					1.90 MM Steel
	05136827AA	AR	3, 7	L					1.60 MM Brass
	05136829AA	AR	3, 7	L					1.70 MM Steel
	05136830AA	AR	3, 7	L					1.70 MM Brass
	05136834AA	AR	3, 7	L					1.80 MM Steel
	05136835AA	AR	3, 7	L					1.80 MM Brass
2									WASHER, Pinion Gear
	05136148AA	4	3, 7						
		4	2, 6						
3	05136150AA	1	7, 3						SHAFT, Differential Pinion
4	05137602AA	1	2, 3, 6, 7						GEAR PACKAGE, Differential
5									NUT, Pinion Yoke
	05103957AA	1							Up To Axle L538154 or X004694
	05103958AA	1							From Axle L538155 or X004695
6	05134541AA	1		L					FLANGE, Driveshaft Yoke
7	05103966AA	1		L					RING, Pinion flange
8									SPACER, Drive Pinion Bearing
	05134540AA	1		L					Up To [02/2004]
	68000011AA	1		L					After [02/2004]
9									SHIM, Axle

SPRINTER (VA)

SERIES	LINE	BODY	ENGINE	TRANSMISSION
L = LOWLINE	3 = HD DODGE 2WD 6 = Lt. Duty DODGE 4WD 2 = Med. Duty DODGE 2WD 7 = Med. Duty DODGE 4WD	55 = Wagon 140" 54 = Wagon 118" 52 = Wagon 140" 51 = Wagon 118" 12 = Van 140" 11 = Van 118" 06 = Front Section 158" 14 = Van 118" 15 = Van 140" 16 = Van 158" 56 = Wagon 158" 01 = Chassis Forward Control 118" 02 = Chassis Forward Control 140"	EX8 = Engine-2.7L I5 Mercedes Turbo Diesel	DGJ = Transmission-5-Spd. Automatic,W5A580

AR = use ase required - = Non illustrrated part

Internal Differential Parts,Rear
Figure 3-210

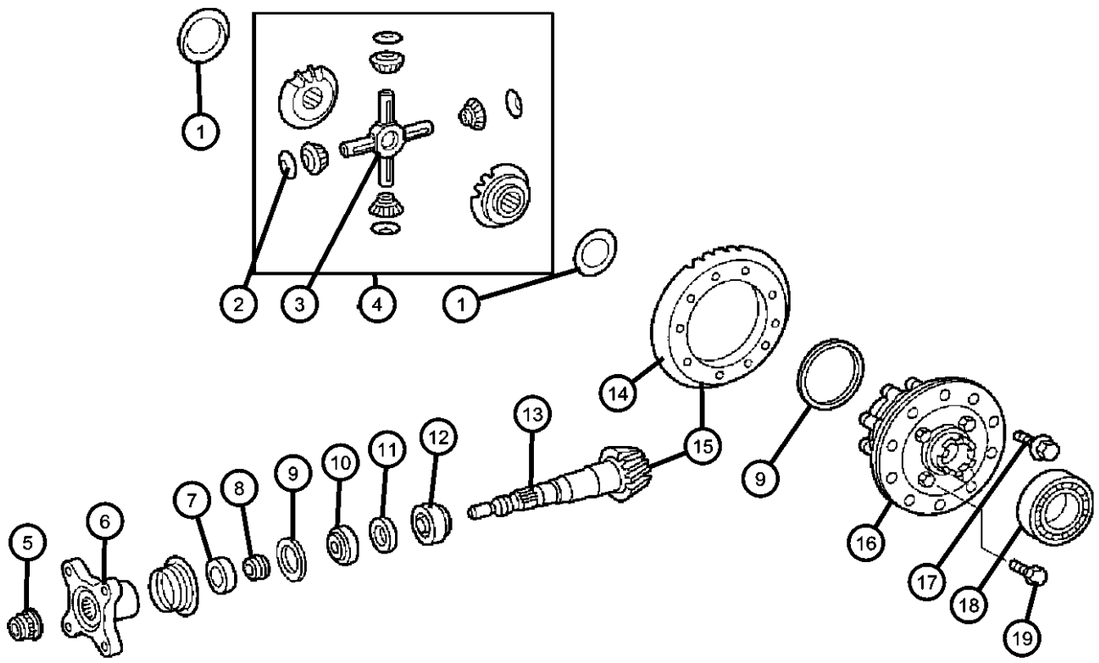

ITEM	PART NUMBER	QTY	LINE	SERIES	BODY	ENGINE	TRANS	TRIM	DESCRIPTION
	05134415AA	1	2, 3, 6, 7						[4.90 MM]
	05134416AA	1	2, 3, 6, 7						[4.92 MM]
	05134417AA	1	2, 3, 6, 7						[4.94 MM]
	05134418AB	1	2, 3, 6, 7						[4.96 MM]
	05134420AA	1	2, 3, 6, 7						[5.02 MM]
	05134421AA	1	2, 3, 6, 7						[5.04 MM]
	05134422AB	1	2, 3, 6, 7						[5.06 MM]
	05134423AA	1	2, 3, 6, 7						[5.12 MM]
	05134425AA	1	2, 3, 6, 7	L					[5.20 MM]
	05134427AA	1	2, 3, 6, 7	L					[5.24 MM]
	05134419AA	1	2, 3, 6, 7						[5.00 MM]
	05134432AA	1	2, 3, 6, 7	L					[5.50 MM]
	05134433AA	1	2, 3, 6, 7	L					[5.60 MM]
	05134434AA	1	2, 3, 6, 7	L					[5.72 MM]
	05134435AA	1	2, 3, 6, 7	L					[5.76 MM]
	05134436AA	1	2, 3, 6, 7	L					[5.80 MM]
	05134437AA	1	2, 3, 6, 7	L					[5.84 MM]
	05134438AA	1	2, 3, 6, 7	L					[5.88 MM]
	05134439AA	1	2, 3, 6, 7	L					[5.92 MM]
	05134440AA	1	2, 3, 6, 7						[5.96 MM]
	05134428AA	1	2, 3, 6, 7	L					[5.28 MM]
	05134429AA	1	2, 3, 6, 7	L					[5.32 MM]
	05134430AA	1	2, 3, 6, 7	L					[5.36 MM]
	05134431AA	1	2, 3, 6, 7	L					[5.40 MM]
	05134469AA	1	2, 3, 6, 7	L					[6.38 MM]
	05134441AA	1	2, 3, 6, 7	L					[6.00 MM]
	05134466AA	1	2, 3, 6, 7	L					[6.10 MM]
	05134467AA	1	2, 3, 6, 7	L					[6.20 MM]

SPRINTER (VA)

SERIES	LINE	BODY	ENGINE	TRANSMISSION
L = LOWLINE	3 = HD DODGE 2WD 6 = Lt. Duty DODGE 4WD 2 = Med. Duty DODGE 2WD 7 = Med. Duty DODGE 4WD	55 = Wagon 140" 54 = Wagon 118" 52 = Wagon 140" 51 = Wagon 118" 12 = Van 140" 11 = Van 118" 06 = Front Section 158" 14 = Van 118" 15 = Van 140" 16 = Van 158" 56 = Wagon 158" 01 = Chassis Forward Control 118" 02 = Chassis Forward Control 140"	EX8 = Engine-2.7L I5 Mercedes Turbo Diesel	DGJ = Transmission-5-Spd. Automatic,W5A580

Internal Differential Parts,Rear
Figure 3-210

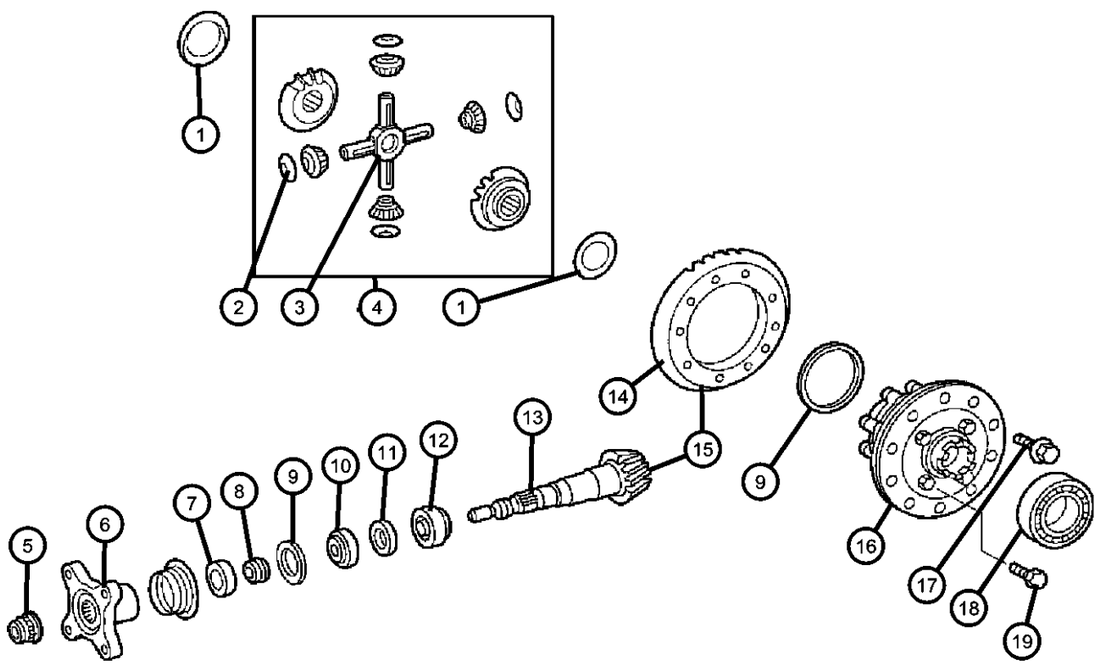

ITEM	PART NUMBER	QTY	LINE	SERIES	BODY	ENGINE	TRANS	TRIM	DESCRIPTION
	05134468AB	1	2, 3, 6, 7	L					[6.30 MM]
10	05136772AA	1		L					BEARINGFront
11	05103900AA	1		L					SEAL, Drive Pinion
12	05134442AA	1		L					BEARING, Drive PinionRear
13	05136773AA	1	2, 3, 6, 7	L					PINION, Differential, [DME]
14	05136774AA	1		L					GEAR, Differential Ring, [DME]
15									GEAR KIT, Ring And Pinion
	05136156AA	1	2, 3, 6, 7	L	11, 12, 14, 15, 16				[DMF]
		1	2, 3, 6, 7	L	51, 52, 54, 55, 56				[DMF]
16									CASE, Differential
	05136172AA	1	3, 7		11, 12, 14, 15, 16				[DMF]
	05137618AA	1	2, 3, 6, 7						[DME]
17	05103849AA	10	2, 3, 6, 7	L					BOLT, Ring Gear, Mounting
18	05097700AA	1	2, 3, 6, 7						BEARING, Differential
19	05136178AA	8							SCREW, Differential, Differential Case Half, Mounting

SPRINTER (VA)

SERIES	LINE	BODY	ENGINE	TRANSMISSION
L = LOWLINE	3 = HD DODGE 2WD 6 = Lt. Duty DODGE 4WD 2 = Med. Duty DODGE 2WD 7 = Med. Duty DODGE 4WD	55 = Wagon 140" 54 = Wagon 118" 52 = Wagon 140" 51 = Wagon 118" 12 = Van 140" 11 = Van 118" 06 = Front Section 158" 14 = Van 118" 15 = Van 140" 16 = Van 158" 56 = Wagon 158" 01 = Chassis Forward Control 118" 02 = Chassis Forward Control 140"	EX8 = Engine-2.7L I5 Mercedes Turbo Diesel	DGJ = Transmission-5-Spd. Automatic,W5A580

Differential Housing,Rear
Figure 3-220

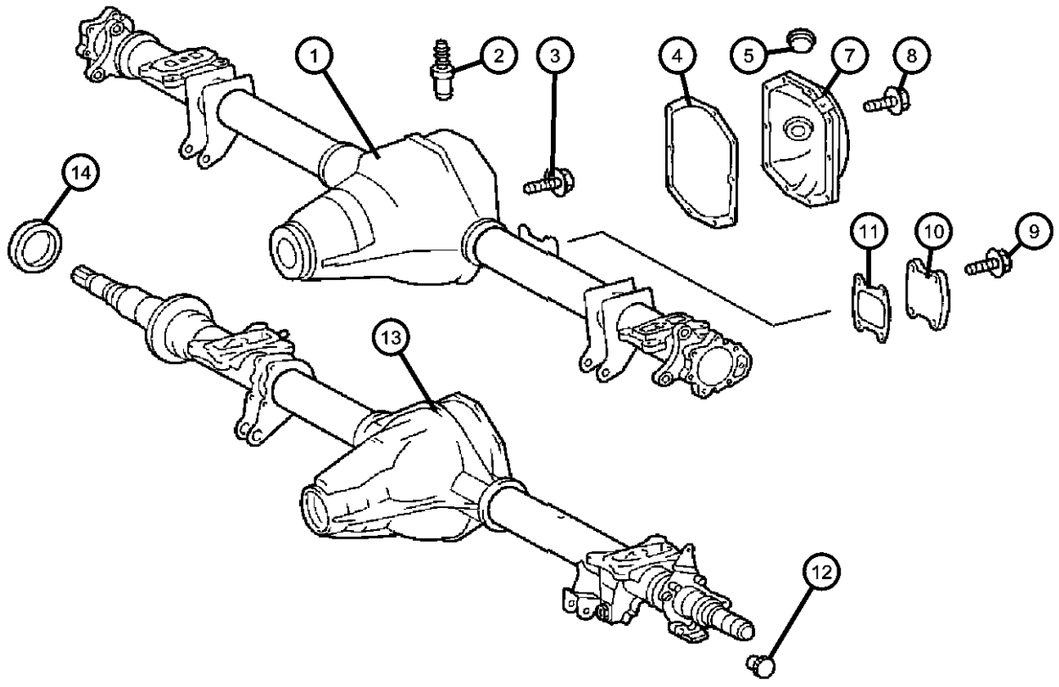

ITEM	PART NUMBER	QTY	LINE	SERIES	BODY	ENGINE	TRANS	TRIM	DESCRIPTION
1	05139133AA	1	3, 7	L	12, 15, 16				HOUSING, Rear Axle
2									VENT, Axle
	05103948AA	1	3, 7	L	12, 15, 16				
		1	2, 6	L	11, 12, 14, 15, 16				
		1	2, 6	L	51, 52, 54, 55, 56				
		1	2, 6	L	01, 02, 06				
3									BOLT, Hex Head
	06104225AA	4	3, 7	L	12, 15, 16				Carrier Bearing Cap, Mounting
		4	2, 6	L	11, 12, 14, 15, 16				Carrier Bearing Cap, Mounting
		4	2, 6	L	51, 52, 54, 55, 56				Carrier Bearing Cap, Mounting
		4	2, 6	L	01, 02, 06				Carrier Bearing Cap, Mounting
4	05103574AA	1	2, 3, 6, 7						GASKET, Differential CoverMounting
5	05097712AA	1	2, 3, 6, 7						PLUG, Oil Drain, Oil Filling and Drain
-6	05134372AA	1	2, 3, 6, 7						GASKET, Oil Filling and Drain Plug, Mounting
7									COVER, Differential
	05103953AA	1	3, 7	L	12, 15, 16				
		1	2, 6	L	11, 12, 14, 15, 16				
		1	2, 6	L	51, 52, 54, 55, 56				
		1	2, 6	L	01, 02, 06				
8	05134371AA	10	2, 3, 6, 7						SCREW AND WASHER, Differential Cover, Mounting
9									SCREW
	06104195AA	4	2, 6	L	01, 02, 06				Axle Housing Cover, Mounting
		4	2, 6	L	11, 12, 14, 15, 16				Axle Housing Cover, Mounting

SPRINTER (VA)

SERIES	LINE	BODY	ENGINE	TRANSMISSION
L = LOWLINE	3 = HD DODGE 2WD 6 = Lt. Duty DODGE 4WD 2 = Med. Duty DODGE 2WD 7 = Med. Duty DODGE 4WD	55 = Wagon 140" 54 = Wagon 118" 52 = Wagon 140" 51 = Wagon 118" 12 = Van 140" 11 = Van 118" 06 = Front Section 158" 14 = Van 118" 15 = Van 140" 16 = Van 158" 56 = Wagon 158" 01 = Chassis Forward Control 118" 02 = Chassis Forward Control 140"	EX8 = Engine-2.7L I5 Mercedes Turbo Diesel	DGJ = Transmission-5-Spd. Automatic,W5A580

Differential Housing,Rear
Figure 3-220

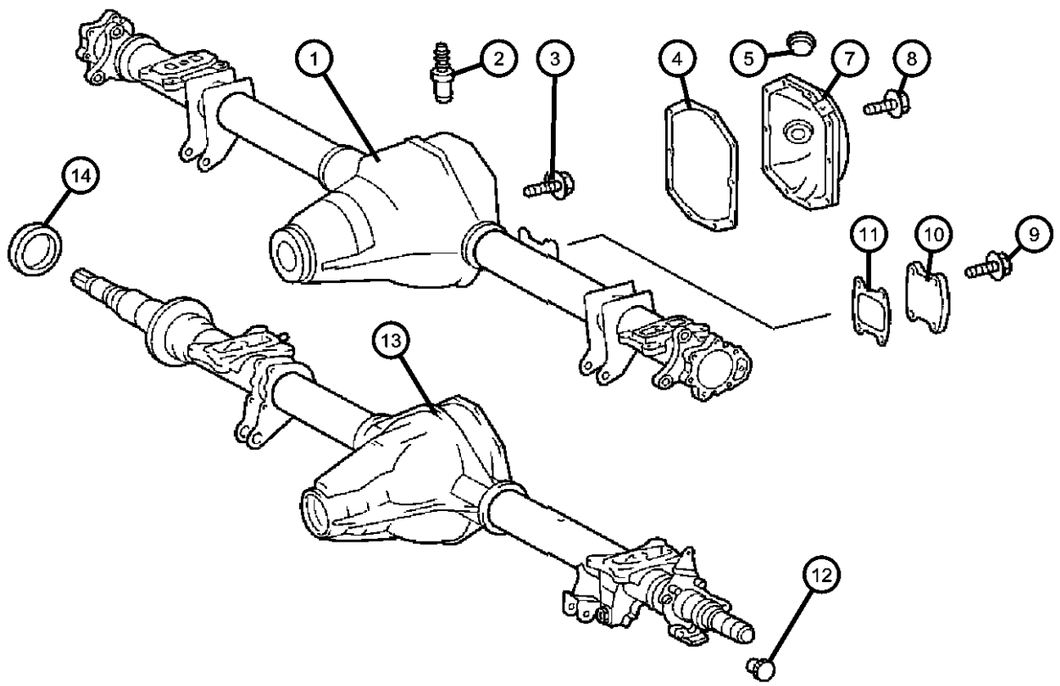

ITEM	PART NUMBER	QTY	LINE	SERIES	BODY	ENGINE	TRANS	TRIM	DESCRIPTION
		4	2, 6	L	51, 52, 54, 55, 56				Axle Housing Cover, Mounting
10									COVER
	05134668AA	1	2, 6	L	11, 12, 14, 15, 16				Axle Housing
		1	2, 6	L	51, 52, 54, 55, 56				Axle Housing
		1	2, 6	L	01, 02, 06				Axle Housing
11									GASKET
	05134669AA	1	2, 6	L	11, 12, 14, 15, 16				Axle Housing Cover, Mounting
		1	2, 6	L	51, 52, 54, 55, 56				Axle Housing Cover, Mounting
		1	2, 6	L	01, 02, 06				Axle Housing Cover, Mounting
12	05134667AA	2	3, 7	L	12, 15, 16				PLUG, To Lock Holes for ABS
13	05139133AA	1	3, 7	L	12, 15, 16				HOUSING, Rear Axle, For Dual Rear Wheels
14									THRUST RING
	05104027AA	1	3, 7	L	12, 15, 16				Right
	05134665AA	1	3, 7	L	12, 15, 16				Left

SPRINTER (VA)

SERIES	LINE	BODY	ENGINE	TRANSMISSION
L = LOWLINE	3 = HD DODGE 2WD 6 = Lt. Duty DODGE 4WD 2 = Med. Duty DODGE 2WD 7 = Med. Duty DODGE 4WD	55 = Wagon 140" 54 = Wagon 118" 52 = Wagon 140" 51 = Wagon 118" 12 = Van 140" 11 = Van 118" 06 = Front Section 158" 14 = Van 118" 15 = Van 140" 16 = Van 158" 56 = Wagon 158" 01 = Chassis Forward Control 118" 02 = Chassis Forward Control 140"	EX8 = Engine-2.7L I5 Mercedes Turbo Diesel	DGJ = Transmission-5-Spd. Automatic,W5A580

Axle Shaft and Wheel Bearings,Single Rear Wheels
Figure 3-230

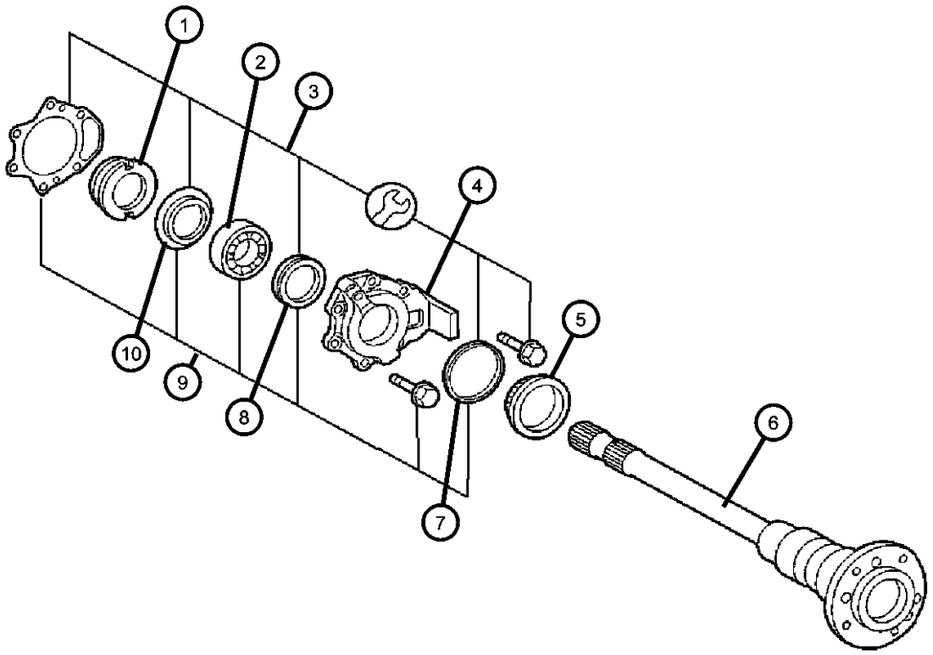

ITEM	PART NUMBER	QTY	LINE	SERIES	BODY	ENGINE	TRANS	TRIM	DESCRIPTION
1									NUT, Axle shaft
	05134634AA	1	2, 6	L					Right
	05134635AA	1	2, 6	L					Left
2	05103883AA	2	2, 6	L					BEARING, WheelRight or Left
3	05104559AA	2	2, 6	L					SEAL KIT, Axle shaft
4									COVER, Axle bearing
	05134638AA	1	2, 6	L					Right
	05134639AA	1	2, 6	L					Left
5	05134641AA	2	2, 6	L					TONE RING, SensorRight or Left
6									SHAFT, Axle
	05134660AA	1	2, 6	L					Right
	05134661AA	1	2, 6	L					Left
7	05104566AA	2	2, 6						SEAL, Rear Axle Flange
8	05139760AA	2	2, 6						SEAL, Rear Axle Flange
9	05103601AA	2	2, 6	L					BEARING KIT, Axle shaft
10	05139738AA	2	2, 6						LOCK, Hub Nut

SPRINTER (VA)

SERIES	LINE	BODY	ENGINE	TRANSMISSION
L = LOWLINE	3 = HD DODGE 2WD 6 = Lt. Duty DODGE 4WD 2 = Med. Duty DODGE 2WD 7 = Med. Duty DODGE 4WD	55 = Wagon 140" 54 = Wagon 118" 52 = Wagon 140" 51 = Wagon 118" 12 = Van 140" 11 = Van 118" 06 = Front Section 158" 14 = Van 118" 15 = Van 140" 16 = Van 158" 56 = Wagon 158" 01 = Chassis Forward Control 118" 02 = Chassis Forward Control 140"	EX8 = Engine-2.7L I5 Mercedes Turbo Diesel	DGJ = Transmission-5-Spd. Automatic,W5A580

Axle Shaft and Wheel Bearings,Dual Rear Wheels
Figure 3-240

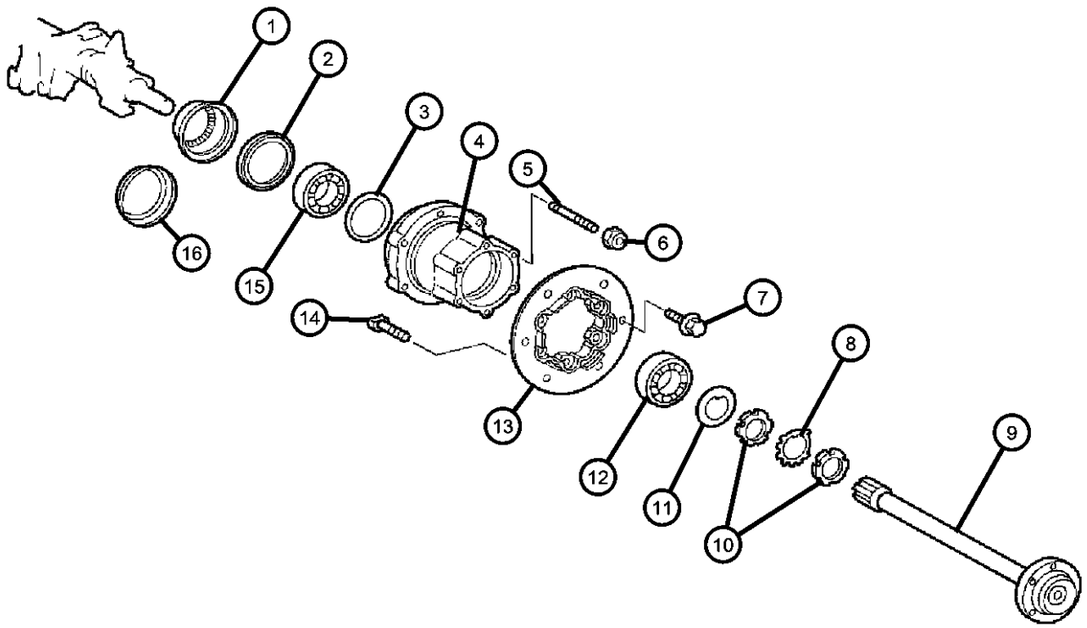

ITEM	PART NUMBER	QTY	LINE	SERIES	BODY	ENGINE	TRANS	TRIM	DESCRIPTION
1	05161914AA	2	3, 7	L					TONE RING, Sensor, ABS
2	05103566AA	2	3, 7	L	12, 15, 16				SEAL, Wheel Bearing
3	05134706AA	2	3, 7	L					SPACER
4	05104580AA	2	3, 7	L					HUB, WheelRight or Left
5	05134714AA	12	3, 7	L					STUD, Hub, Axle, Mounting
6	05134715AA	12	3, 7	L					NUT, Hex Lock, Axle, Mounting
7	06104258AA	12	3, 7	L	12, 15, 16				SCREW, Hex Flange Head
8	05103578AA	2	3, 7	L					LOCK, Bearing Adjusting Nut
9	05166553AA	2	3, 7	L					SHAFT, Axle
10	05134720AA	2	3, 7	L					NUT, Bearing Adjusting
11	05134719AA	2	3, 7						SPACER
12	05103547AA	2	3, 7	L					BEARING, WheelOuter
13	05134718AA	2	3, 7	L					FLANGE, Axle OutputRight or Left
14	05103938AA	12	3, 7	L					STUD, Wheel
15	05103562AA	2	3, 7	L					BEARING, WheelInner
16	05134709AA	2	3, 7	L					SLINGER, Oil

SPRINTER (VA)

SERIES	LINE	BODY	ENGINE	TRANSMISSION
L = LOWLINE	3 = HD DODGE 2WD 6 = Lt. Duty DODGE 4WD 2 = Med. Duty DODGE 2WD 7 = Med. Duty DODGE 4WD	55 = Wagon 140" 54 = Wagon 118" 52 = Wagon 140" 51 = Wagon 118" 12 = Van 140" 11 = Van 118" 06 = Front Section 158" 14 = Van 118" 15 = Van 140" 16 = Van 158" 56 = Wagon 158" 01 = Chassis Forward Control 118" 02 = Chassis Forward Control 140"	EX8 = Engine-2.7L I5 Mercedes Turbo Diesel	DGJ = Transmission-5-Spd. Automatic,W5A580

Vent,Rear Axle
Figure 3-310

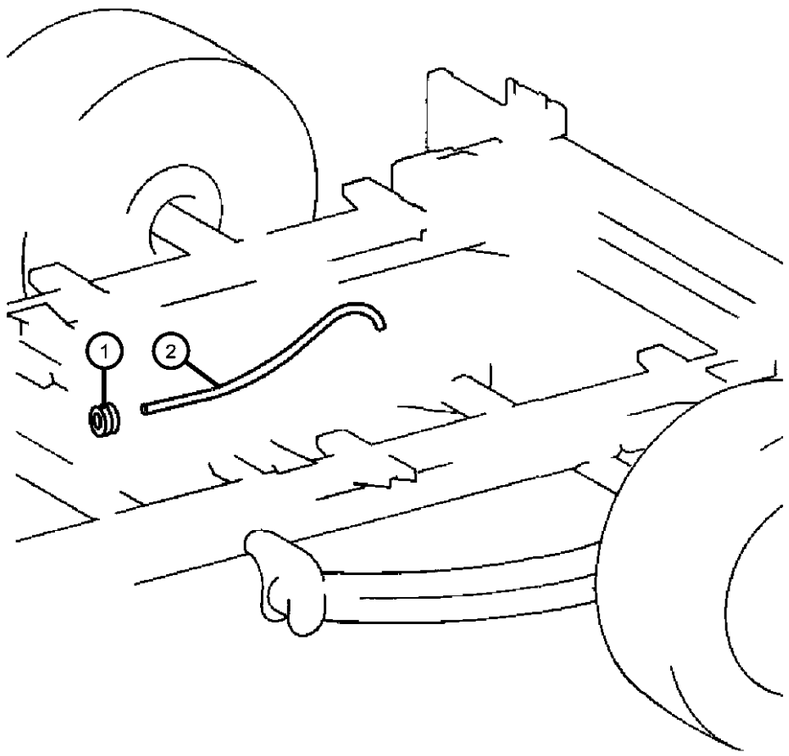

ITEM	PART NUMBER	QTY	LINE	SERIES	BODY	ENGINE	TRANS	TRIM	DESCRIPTION
1									GROMMET
	05125930AA	1	2, 6	L	11, 12, 14, 15, 16				
		1	2, 6	L	51, 52, 54, 55, 56				
		1	3, 7	L	12, 15, 16				
2									HOSE, Axle Vent
	05104076AA	1	2, 6	L	11, 12, 14, 15, 16				
		1	2, 6	L	51, 52, 54, 55, 56				
		1	3, 7	L	12, 15, 16				

SPRINTER (VA)

SERIES	LINE	BODY	ENGINE	TRANSMISSION
L = LOWLINE	3 = HD DODGE 2WD 6 = Lt. Duty DODGE 4WD 2 = Med. Duty DODGE 2WD 7 = Med. Duty DODGE 4WD	55 = Wagon 140" 54 = Wagon 118" 52 = Wagon 140" 51 = Wagon 118" 12 = Van 140" 11 = Van 118" 06 = Front Section 158" 14 = Van 118" 15 = Van 140" 16 = Van 158" 56 = Wagon 158" 01 = Chassis Forward Control 118" 02 = Chassis Forward Control 140"	EX8 = Engine-2.7L I5 Mercedes Turbo Diesel	DGJ = Transmission-5-Spd. Automatic,W5A580

Group - 4

Parking Brake

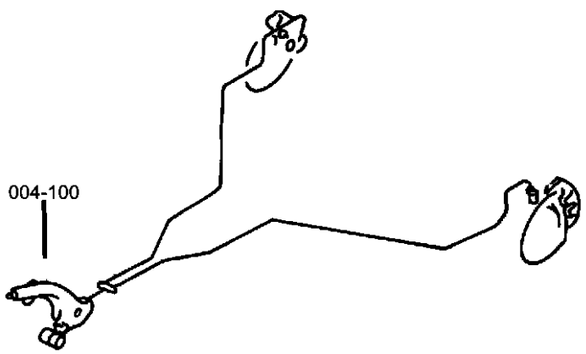

004-100 Parking Brake Lever and Cables 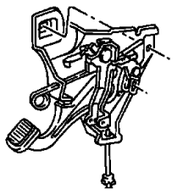			

Group - 4 Parking Brake

Illustration Title — Group-Fig. No.

Parking Brake Lever and Cables
Parking Brake Lever Assembly ..... Fig. 4 - 110
Parking Brake Assembly..... Fig. 4 - 120

Parking Brake Lever Assembly
Figure 4-110

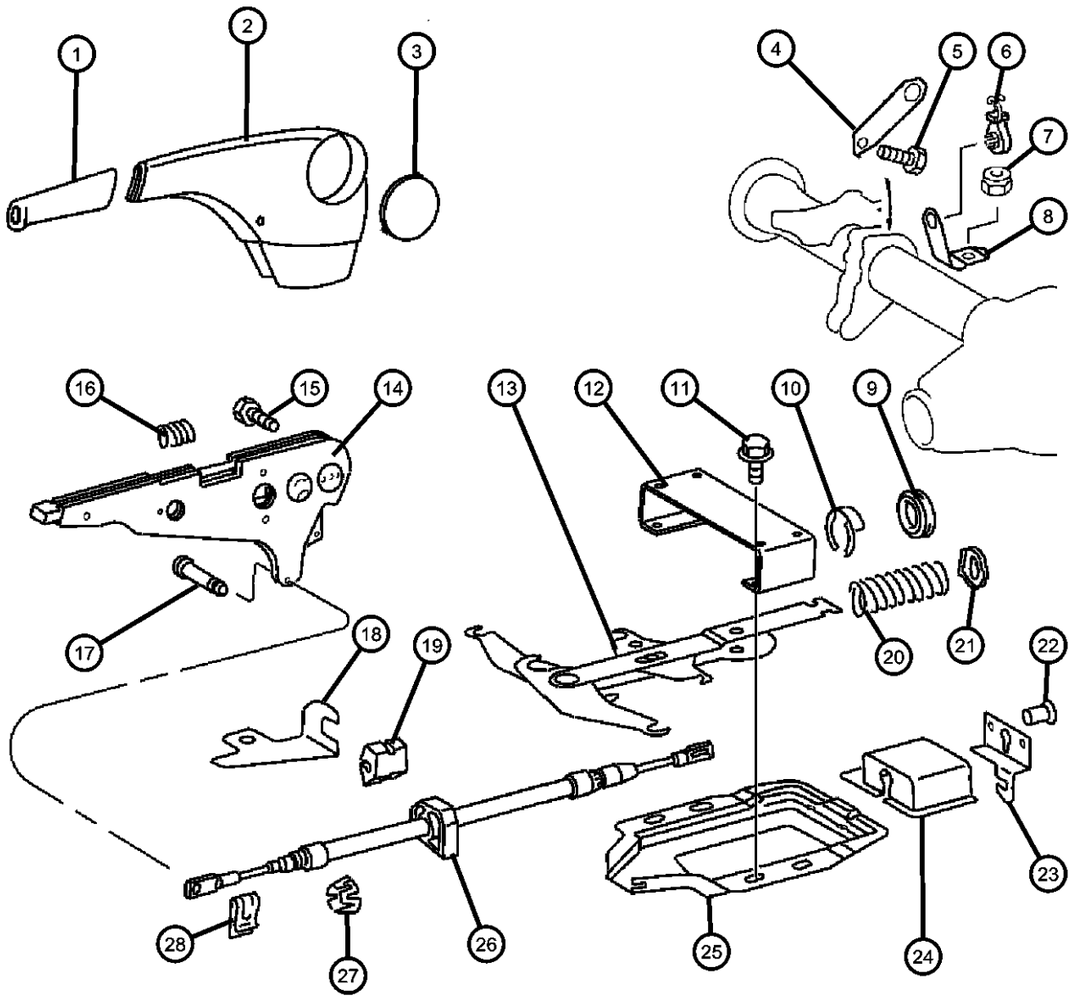

ITEM	PART NUMBER	QTY	LINE	SERIES	BODY	ENGINE	TRANS	TRIM	DESCRIPTION
1									HANDLE, Parking Brake
	05119259AA	1	2, 6						
		1	3, 7		12, 15, 16				
2									COVER, Parking Brake Housing
	05119264AA	1	2, 6						
		1	3, 7		12, 15, 16				
3									COVER, Parking Brake
	05104086AA	1	2, 6		01, 02, 06				
		1	2, 6		11, 12, 14, 15, 16				
		1	2, 6		51, 52, 54, 55, 56				
		1	3, 7		12, 15, 16				
4									BRACKET
	05119277AA	1	2, 6		01, 02, 06				Right
		1	2, 6		11, 12, 14, 15, 16				Right
		1	2, 6		51, 52, 54, 55, 56				Right
	05119274AA	1	2, 6		01, 02, 06				Left
		1	2, 6		11, 12, 14, 15, 16				Left
		1	2, 6		51, 52, 54, 55, 56				Left
	05136070AA	1	3, 7		12, 15, 16				Left
	05136069AA	1	3, 7		12, 15, 16				Right
5									BOLT
	05104655AA	2	2, 6		01, 02, 06				
		2	2, 6		11, 12, 14, 15, 16				
		2	2, 6		51, 52, 54, 55, 56				
		2	3, 7		12, 15, 16				

SPRINTER (VA)

SERIES	LINE	BODY	ENGINE	TRANSMISSION
L = LOWLINE	3 = HD DODGE 2WD 6 = Lt. Duty DODGE 4WD 2 = Med. Duty DODGE 2WD 7 = Med. Duty DODGE 4WD	55 = Wagon 140" 54 = Wagon 118" 52 = Wagon 140" 51 = Wagon 118" 12 = Van 140" 11 = Van 118" 06 = Front Section 158" 14 = Van 118" 15 = Van 140" 16 = Van 158" 56 = Wagon 158" 01 = Chassis Forward Control 118" 02 = Chassis Forward Control 140"	EX8 = Engine-2.7L I5 Mercedes Turbo Diesel	DGJ = Transmission-5-Spd. Automatic,W5A580

AR = use ase required - = Non illustrrated part

Parking Brake Lever Assembly
Figure 4-110

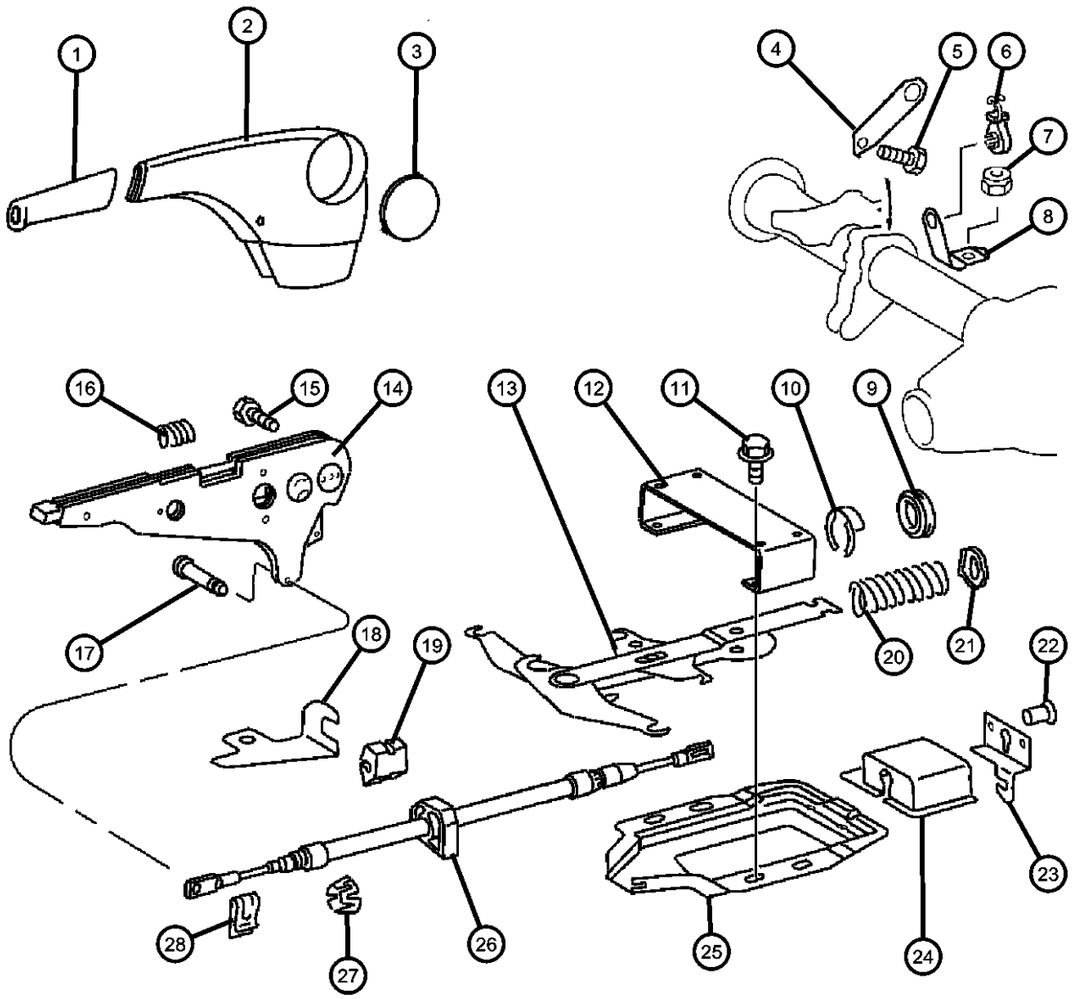

ITEM	PART NUMBER	QTY	LINE	SERIES	BODY	ENGINE	TRANS	TRIM	DESCRIPTION
6									CLIP, Parking Brake Cable
	05119283AA	6	2, 6		51, 52, 54, 55, 56				
		6	3, 7		12, 15, 16				
		4	2, 6		01, 02, 06				
		6	2, 6		11, 12, 14, 15, 16				
7									NUT, M6x1.00
	05127449AA	1	2, 6		01, 02, 06				
		2	2, 6		11, 12, 14, 15, 16				
		2	2, 6		51, 52, 54, 55, 56				
		2	3, 7		12, 15, 16				
8									BRACKET, Parking Brake Cable Guide
	05119270AA	1	2, 6		11, 12, 14, 15, 16				Left
		1	2, 6		01, 02, 06				Left
	05119273AA	1	2, 6		51, 52, 54, 55, 56				Right
		1	2, 6		51, 52, 54, 55, 56				Left
		1	2, 6		01, 02, 06				Right
		1	2, 6		11, 12, 14, 15, 16				Right
9									GROMMET, Parking Brake Cable
	05125927AA	1	2, 6		01, 02, 06				
		1	2, 6		11, 12, 14, 15, 16				
		1	2, 6		51, 52, 54, 55, 56				
		1	3, 7		12, 15, 16				
10									CLIP, Spring

SPRINTER (VA)

SERIES	LINE	BODY	ENGINE	TRANSMISSION
L = LOWLINE	3 = HD DODGE 2WD 6 = Lt. Duty DODGE 4WD 2 = Med. Duty DODGE 2WD 7 = Med. Duty DODGE 4WD	55 = Wagon 140" 54 = Wagon 118" 52 = Wagon 140" 51 = Wagon 118" 12 = Van 140" 11 = Van 118" 06 = Front Section 158" 14 = Van 118" 15 = Van 140" 16 = Van 158" 56 = Wagon 158" 01 = Chassis Forward Control 118" 02 = Chassis Forward Control 140"	EX8 = Engine-2.7L I5 Mercedes Turbo Diesel	DGJ = Transmission-5-Spd. Automatic,W5A580

Parking Brake Lever Assembly
Figure 4-110

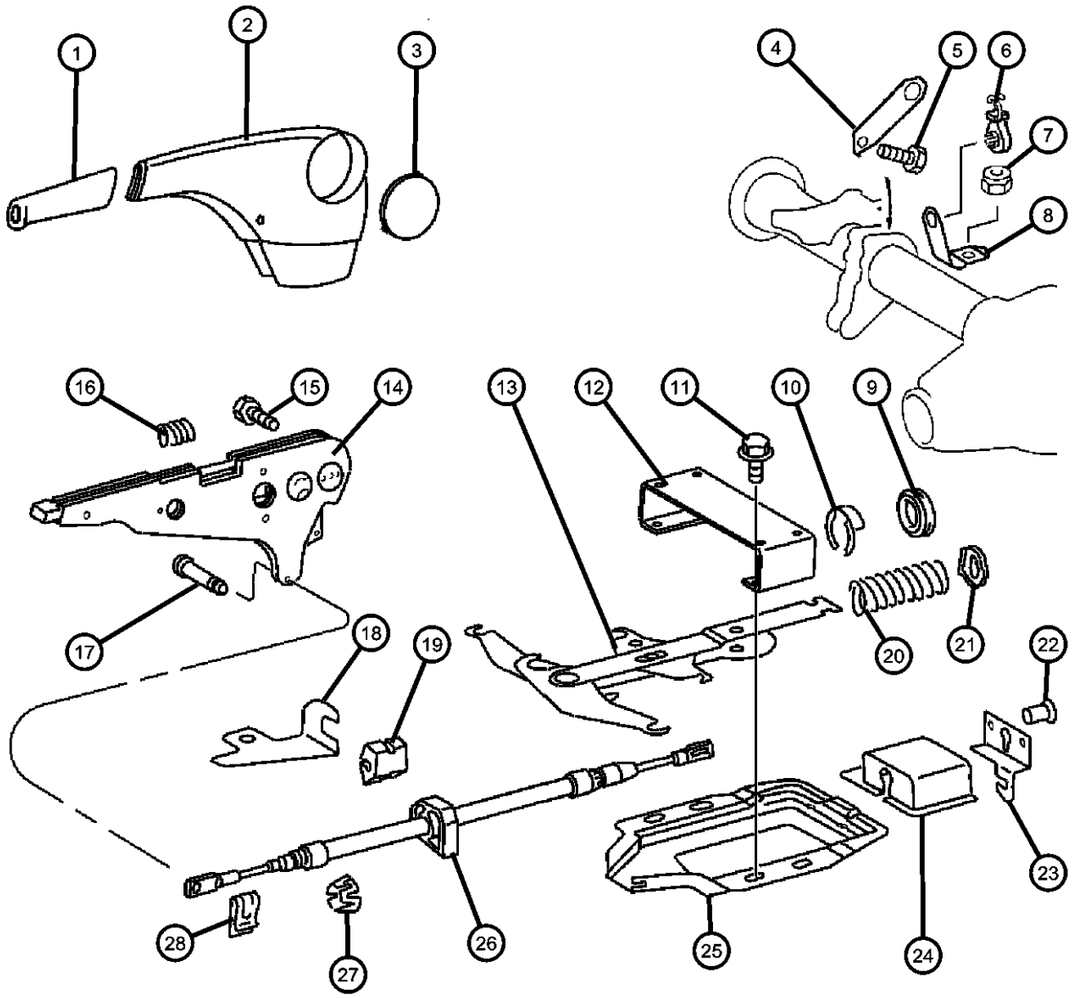

ITEM	PART NUMBER	QTY	LINE	SERIES	BODY	ENGINE	TRANS	TRIM	DESCRIPTION
	05125586AA	1	2, 6		01, 02, 06				
		1	2, 6		11, 12, 14, 15, 16				
		1	2, 6		51, 52, 54, 55, 56				
		1	3, 7		12, 15, 16				
11									SCREW
	05126264AA	4	2, 6		11, 12, 14, 15, 16				
		4	2, 6		51, 52, 54, 55, 56				
		4	2, 6		01, 02, 06				
		4	3, 7		12, 15, 16				
12	05133901AA	1	3, 7		12, 15, 16				BRACKET
13									EQUALIZER, Parking Brake Cable
	05119231AA	1	2, 6		01, 02, 06				
		1	2, 6		11, 12, 14, 15, 16				
	05140766AA	1	3, 7		02, 06				
		1	2, 6		51, 52, 54, 55, 56				
	05119232AA	1	3, 7		12, 15, 16				
14									LEVER, Park Brake
	05119146AA	1	2, 6						
		1	3, 7		12, 15, 16				
15	05097692AA	2	2, 3, 6, 7						SCREW, M8x20
16	05125844AA	1	3, 7		12, 15, 16				SPRING
17									PIN, Parking Brake Handle
	05119284AA	1	2, 6		01, 02, 06				
		1	2, 6		11, 12, 14, 15, 16				
		1	3, 7		12, 15, 16				

SPRINTER (VA)

SERIES	LINE	BODY	ENGINE	TRANSMISSION
L = LOWLINE	3 = HD DODGE 2WD 6 = Lt. Duty DODGE 4WD 2 = Med. Duty DODGE 2WD 7 = Med. Duty DODGE 4WD	55 = Wagon 140" 54 = Wagon 118" 52 = Wagon 140" 51 = Wagon 118" 12 = Van 140" 11 = Van 118" 06 = Front Section 158" 14 = Van 118" 15 = Van 140" 16 = Van 158" 56 = Wagon 158" 01 = Chassis Forward Control 118" 02 = Chassis Forward Control 140"	EX8 = Engine-2.7L I5 Mercedes Turbo Diesel	DGJ = Transmission-5-Spd. Automatic,W5A580

AR = use ase required - = Non illustrrated part

Parking Brake Lever Assembly
Figure 4-110

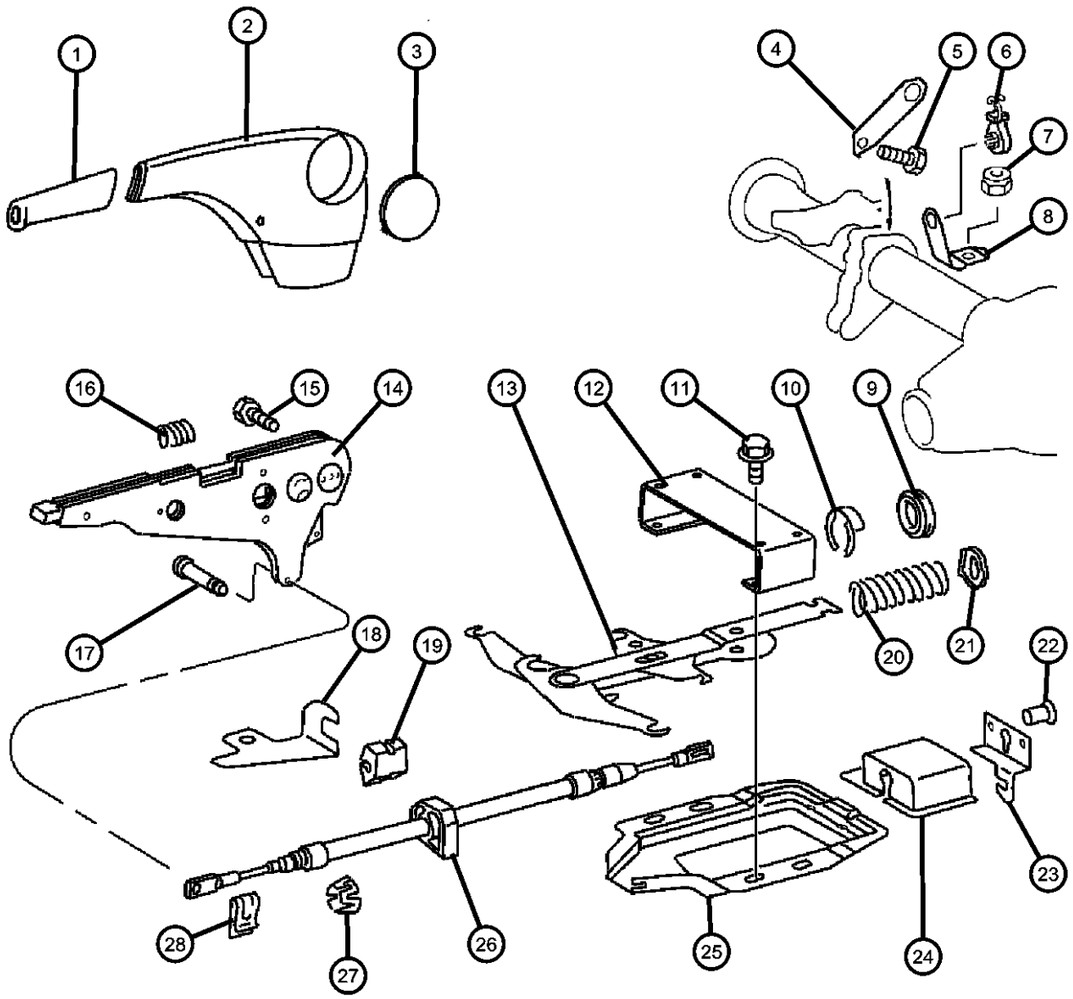

ITEM	PART NUMBER	QTY	LINE	SERIES	BODY	ENGINE	TRANS	TRIM	DESCRIPTION
		1	2, 6		51, 52, 54, 55, 56				
18									BRACKET, Hand Brake
	05119275AA	1	2, 6						
		1	3, 7		12, 15				
19									GROMMET, Parking Brake Cable
	05119295AA	1	3, 7						
		1	2, 6						
20									SPRING, Parking Brake Release
	05119260AA	1	2, 6		01, 02, 06				
		1	2, 6		11, 12, 14, 15, 16				
		1	3, 7		12, 15, 16				
		1	2, 6		51, 52, 54, 55, 56				
21									WASHER
	05119287AA	1	2, 6		01, 02, 06				
		1	2, 6		51, 52, 54, 55, 56				
		1	3, 7		12, 15, 16				
		1	2, 6		11, 12, 14, 15, 16				
22									RIVET, Blind Bulb
	05133417AA	3	2, 6		51, 52, 54, 55, 56				
		3	2, 6		01, 02, 06				
		3	2, 6		11, 12, 14, 15, 16				
		3	3, 7		12, 15, 16				
23									REINFORCEMENT, Park Brake Mounting
	05118455AA	1	2, 6						

SPRINTER (VA)

SERIES	LINE	BODY	ENGINE	TRANSMISSION
L = LOWLINE	3 = HD DODGE 2WD 6 = Lt. Duty DODGE 4WD 2 = Med. Duty DODGE 2WD 7 = Med. Duty DODGE 4WD	55 = Wagon 140" 54 = Wagon 118" 52 = Wagon 140" 51 = Wagon 118" 12 = Van 140" 11 = Van 118" 06 = Front Section 158" 14 = Van 118" 15 = Van 140" 16 = Van 158" 56 = Wagon 158" 01 = Chassis Forward Control 118" 02 = Chassis Forward Control 140"	EX8 = Engine-2.7L I5 Mercedes Turbo Diesel	DGJ = Transmission-5-Spd. Automatic,W5A580

AR = use ase required - = Non illustrrated part

Parking Brake Lever Assembly
Figure 4-110

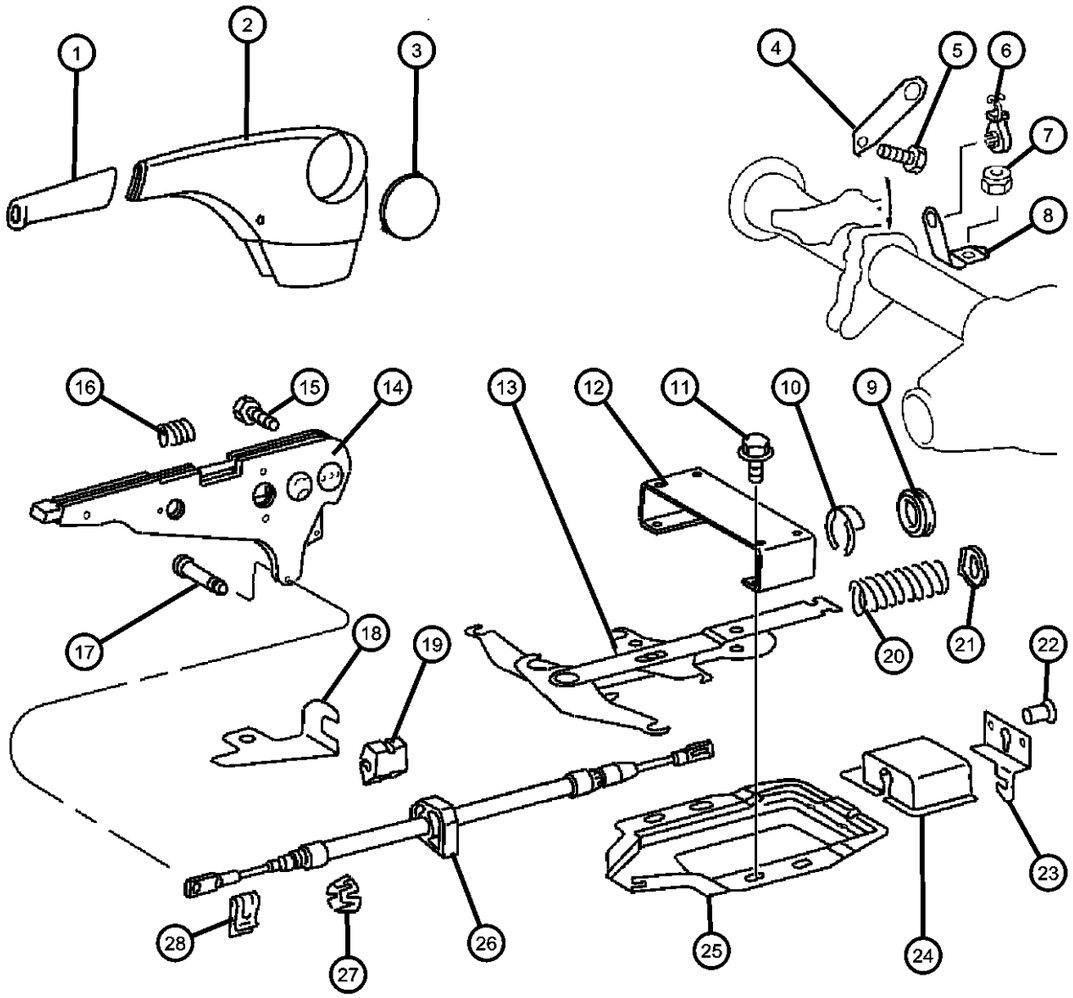

ITEM	PART NUMBER	QTY	LINE	SERIES	BODY	ENGINE	TRANS	TRIM	DESCRIPTION
		1	3, 7		12, 15, 16				
24									COVER, Parking Brake Cable
	05118469AA	1	2, 6		01, 02, 06				
		1	2, 6		11, 12, 14, 15, 16				
		1	2, 6		51, 52, 54, 55, 56				
		1	3, 7		12, 15, 16				
25									COVER, Equalizer
	05119224AA	1	2, 6		01, 02, 06				
		1	2, 6		11, 12, 14, 15, 16				
		1	2, 6		51, 52, 54, 55, 56				
		1	3, 7		12, 15, 16				
26									CABLE, Parking Brake
	05119245AA	1	2, 6		02				[5AE]
		1	2, 6		11, 12, 14, 15, 16				[5AE]
		1	2, 6		51, 52, 54, 55, 56				[5AE]
		1	3, 7		02				[5AE]
		1	3, 7		12, 15				[5AE]
	05119247AA	1	2, 6		16				[5AF]
		1	2, 6		56				[5AF]
		1	3, 7		16				[5AF]
	05129192AA	1	2, 6		01				[5AC]
		1	2, 6		11, 14				[5AC]
27									CLIP, Cable
	05119298AA	1	2, 6		01, 02, 06				
		1	2, 6		11, 12, 14, 15, 16				

SPRINTER (VA)

SERIES	LINE	BODY	ENGINE	TRANSMISSION
L = LOWLINE	3 = HD DODGE 2WD 6 = Lt. Duty DODGE 4WD 2 = Med. Duty DODGE 2WD 7 = Med. Duty DODGE 4WD	55 = Wagon 140" 54 = Wagon 118" 52 = Wagon 140" 51 = Wagon 118" 12 = Van 140" 11 = Van 118" 06 = Front Section 158" 14 = Van 118" 15 = Van 140" 16 = Van 158" 56 = Wagon 158" 01 = Chassis Forward Control 118" 02 = Chassis Forward Control 140"	EX8 = Engine-2.7L I5 Mercedes Turbo Diesel	DGJ = Transmission-5-Spd. Automatic,W5A580

Parking Brake Lever Assembly
Figure 4-110

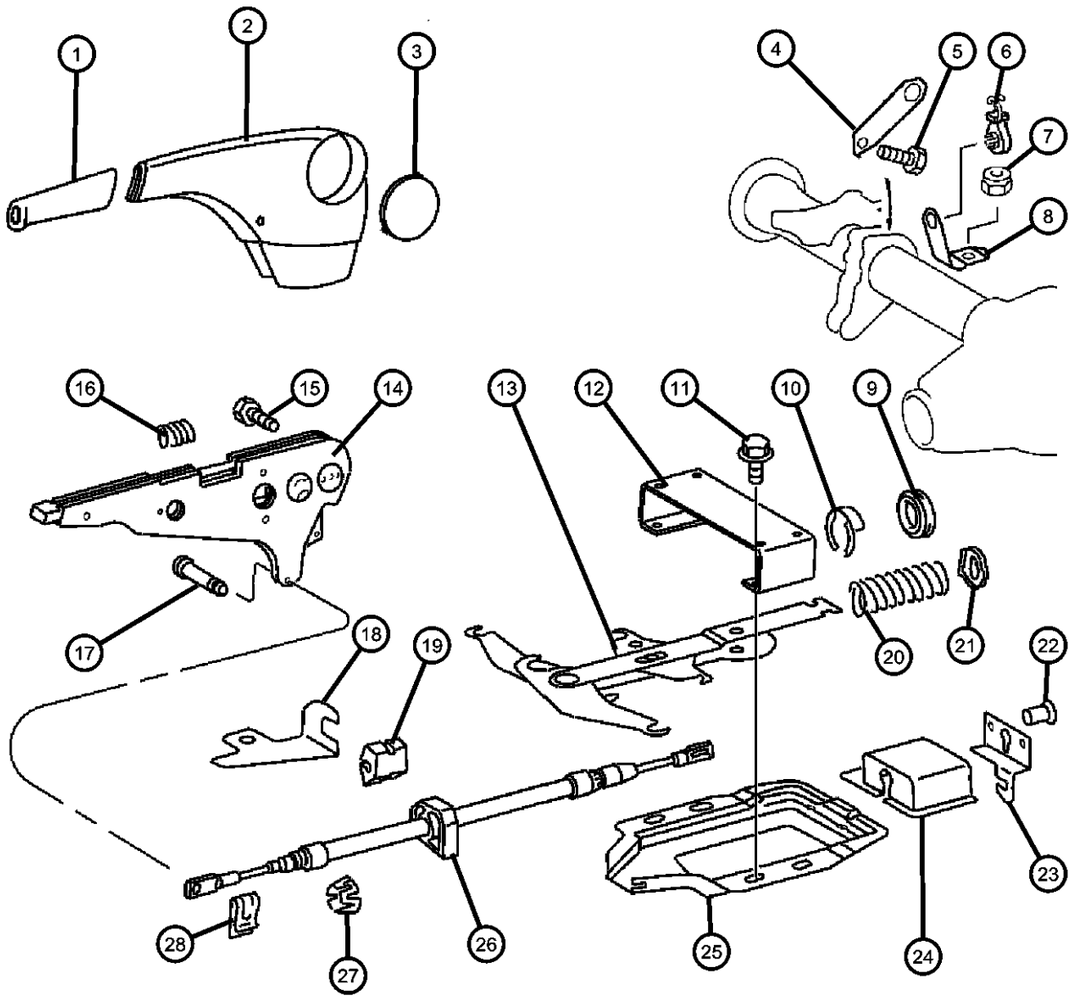

ITEM	PART NUMBER	QTY	LINE	SERIES	BODY	ENGINE	TRANS	TRIM	DESCRIPTION
		1	2, 6		51, 52, 54, 55, 56				
		1	3, 7		12, 15, 16				
28									CLIP, Retaining
	05126243AA	1	2, 6		01, 02, 06				
		1	2, 6		11, 12, 14, 15, 16				
		1	2, 6		51, 52, 54, 55, 56				
		1	3, 7		12, 15, 16				

SPRINTER (VA)

SERIES	LINE	BODY	ENGINE	TRANSMISSION
L = LOWLINE	3 = HD DODGE 2WD 6 = Lt. Duty DODGE 4WD 2 = Med. Duty DODGE 2WD 7 = Med. Duty DODGE 4WD	55 = Wagon 140" 54 = Wagon 118" 52 = Wagon 140" 51 = Wagon 118" 12 = Van 140" 11 = Van 118" 06 = Front Section 158" 14 = Van 118" 15 = Van 140" 16 = Van 158" 56 = Wagon 158" 01 = Chassis Forward Control 118" 02 = Chassis Forward Control 140"	EX8 = Engine-2.7L I5 Mercedes Turbo Diesel	DGJ = Transmission-5-Spd. Automatic,W5A580

AR = use ase required - = Non illustrrated part

Parking Brake Assembly
Figure 4-120

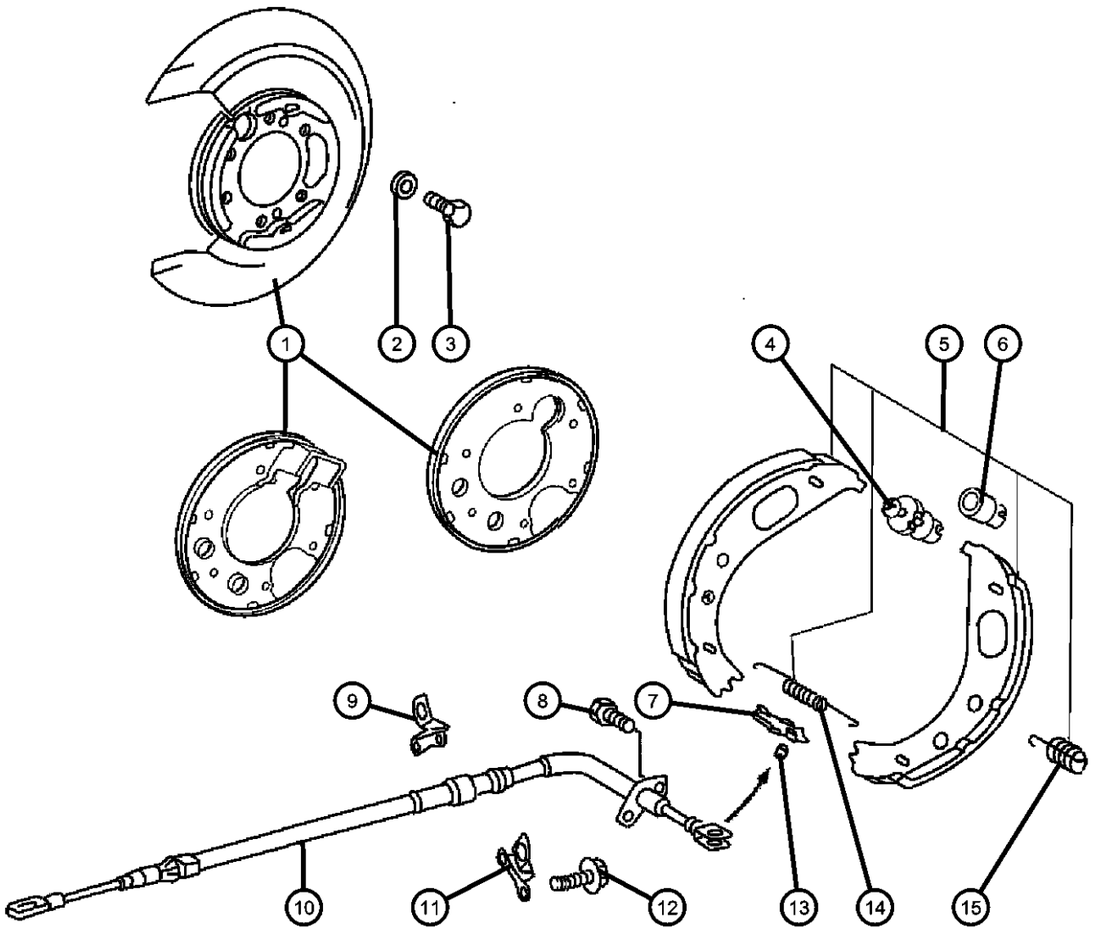

ITEM	PART NUMBER	QTY	LINE	SERIES	BODY	ENGINE	TRANS	TRIM	DESCRIPTION
1									PLATE, Brake Backing
	05103952AA	1	2, 6						Left
	05139222AA	1	2, 6						Right
	05139223AA	1	3, 7						Left
	05139224AA	1	3, 7						Right
2	05139232AA	4	3, 7						WASHER
3	05139231AA	4							SCREW
4	05139234AA	2	2, 3, 6, 7						ADJUSTER, Parking Brake
5									SHOE AND LINING, Parking Brake
	05103792AA	1	2, 6						
	05103793AA	1	3, 7						
6	05139233AA	2	2, 3, 6, 7						BUSHING
7	05101691AA	2							PLATE, Brake Shoe Guide
8	05098124AA	2							SCREW
9	05139229AA	1	3, 7						BRACKET, Parking BrakeRight Rear
10									CABLE, Parking Brake
	05139225AA	2	2, 6						Right or Left
	05139226AA	1	3, 7						Left
	05139227AA	1	3, 7						Right
11	05139228AA	1	3, 7						BRACKET, Parking BrakeLeft Rear
12	05134371AA	10	2, 3, 6, 7						SCREW AND WASHER
13	05098414AA	2							PIN
14									SPRING, Brake Shoe to Shoe
	05139480AA	2							
	05139736AA	2	2, 6						
15	05139479AA	4	2, 6						SPRING, Brake Shoe Hold Down
-16	05104655AA	4	2, 6		01, 02, 06				BOLT, Cable to Shock

SPRINTER (VA)

SERIES	LINE	BODY	ENGINE	TRANSMISSION
L = LOWLINE	3 = HD DODGE 2WD 6 = Lt. Duty DODGE 4WD 2 = Med. Duty DODGE 2WD 7 = Med. Duty DODGE 4WD	55 = Wagon 140" 54 = Wagon 118" 52 = Wagon 140" 51 = Wagon 118" 12 = Van 140" 11 = Van 118" 06 = Front Section 158" 14 = Van 118" 15 = Van 140" 16 = Van 158" 56 = Wagon 158" 01 = Chassis Forward Control 118" 02 = Chassis Forward Control 140"	EX8 = Engine-2.7L I5 Mercedes Turbo Diesel	DGJ = Transmission-5-Spd. Automatic,W5A580

AR = use ase required - = Non illustrrated part

Group - 5

Service Brakes

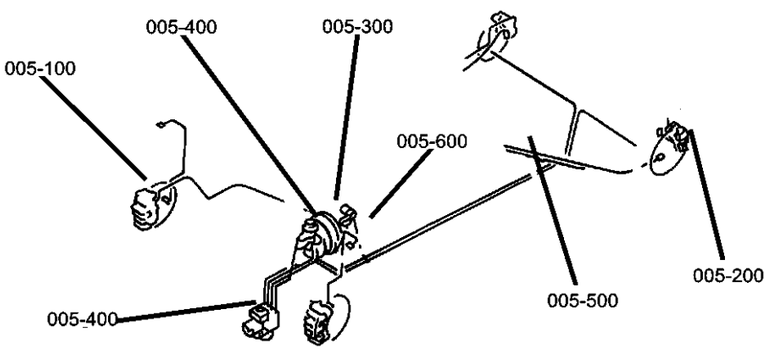

005-100 Front Brakes 	**005-200** Rear Brakes 	**005-300** Power Brake Booster 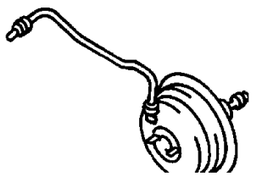	**005-400** Brake Master Cylinder 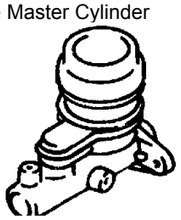
005-500 Brake Lines and Hoses 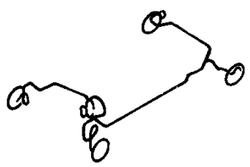	**005-600** Brake Pedals 		

Group - 5 Service Brakes

Illustration Title — Group-Fig. No.

Front Brakes
Brakes, Front ..... Fig. 5 - 110

Rear Brakes
Brakes,Rear,272MM ..... Fig. 5 - 210
Brakes,Rear,285MM ..... Fig. 5 - 220

Power Brake Booster
Booster ..... Fig. 5 - 310
Vacuum Lines ..... Fig. 5 - 320
Vacuum Reservoir ..... Fig. 5 - 330

Brake Master Cylinder
Master Cylinder ..... Fig. 5 - 410
Hydraulic Control Unit and ABS Module ..... Fig. 5 - 420

Brake Lines and Hoses
Lines,Brake,With ABS,2500/3500 Series ..... Fig. 5 - 510
Brake, Power Regulator ..... Fig. 5 - 520

Brake Pedals
Pedal Brake ..... Fig. 5 - 610

Brakes, Front
Figure 5-110

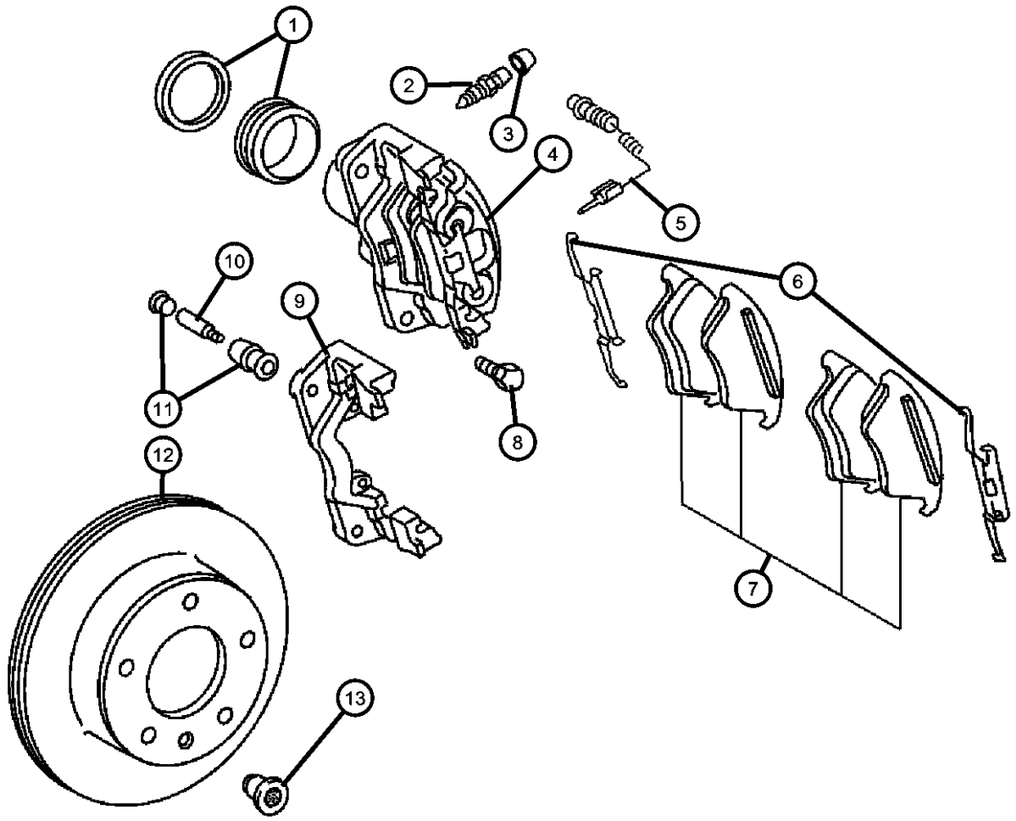

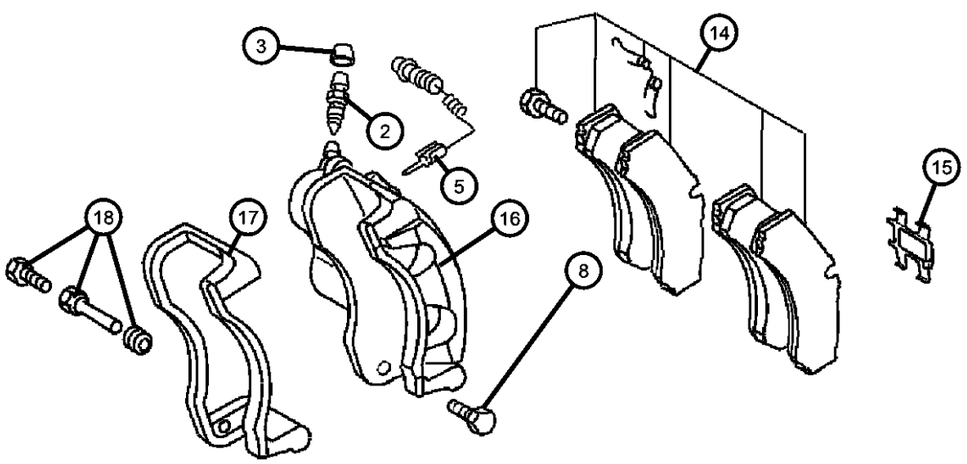

ITEM	PART NUMBER	QTY	LINE	SERIES	BODY	ENGINE	TRANS	TRIM	DESCRIPTION
Note: You must check the brand name on the old caliper to determine which one to order.									
1	05139261AA	1							SEAL, Caliper Piston
2	05139258AA	1	2, 6						BLEEDER SCREW, Brake
3	05126309AA	1	2, 3, 6, 7						CAP, Bleeder
4									CALIPER, Disc Brake
	05127482AA	1							With Bosch Linings-without Pads, Right
	05127483AA	1							With Bosch Linings-without Pads, Left
	05127486AA	1							With Wabco/Perrot Linings-without Pads, Right
	05135215AA	1							With Wabco/Perrot Linings-without Pads, Left
	05135642AA	1							With Teves/Jurid Linings-without Pads, Right
	05135643AA	1							With Teves/Jurid Linings-without Pads, Left
5	05103583AB	2	2, 3, 6, 7						SENSOR, Brake wearRight or Left
6	05139906AA	2	2, 6						SPRING, Brake Pad Retraction
7									PAD KIT, Disc Brake
	05103794AA	1							
	05135895AA	1							Teves/Jurid
8	05139464AA	4							SCREW, Galfer
9	05103631AA	1							ADAPTER, Disc Brake Caliper, Teves/Jurid, Right or Left
10	05103632AA	1							PIN KIT, Disc Brake, Teves, Right or Left
11	05114556AA	1							BUSHING, Caliper, Teves
12									ROTOR, Brake
	05103602AA	1							With 15 Inch Wheels-From Front Axle S 482214/Y422060, Right or Left
	05104561AA	1							With 15 Inch Wheels-Up to Front Axle S 482213/Y422059, Right or Left

SPRINTER (VA)

SERIES	LINE	BODY	ENGINE	TRANSMISSION
L = LOWLINE	3 = HD DODGE 2WD 6 = Lt. Duty DODGE 4WD 2 = Med. Duty DODGE 2WD 7 = Med. Duty DODGE 4WD	55 = Wagon 140" 54 = Wagon 118" 52 = Wagon 140" 51 = Wagon 118" 12 = Van 140" 11 = Van 118" 06 = Front Section 158" 14 = Van 118" 15 = Van 140" 16 = Van 158" 56 = Wagon 158" 01 = Chassis Forward Control 118" 02 = Chassis Forward Control 140"	EX8 = Engine-2.7L I5 Mercedes Turbo Diesel	DGJ = Transmission-5-Spd. Automatic,W5A580

Brakes, Front
Figure 5-110

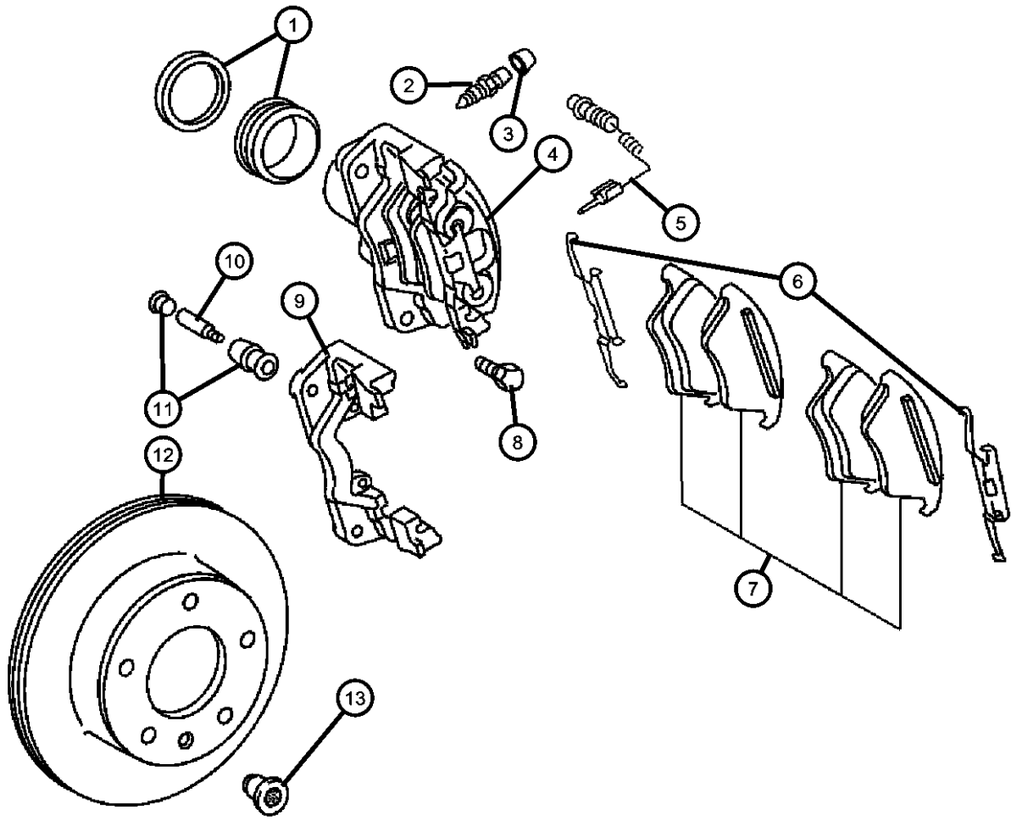

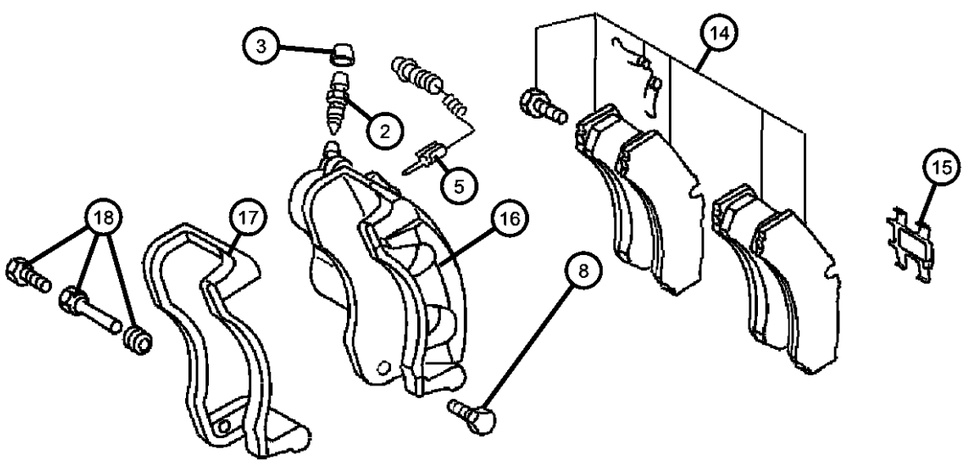

ITEM	PART NUMBER	QTY	LINE	SERIES	BODY	ENGINE	TRANS	TRIM	DESCRIPTION
	05114479AA	1							With 16 Inch Wheels, Right or Left
13									SCREW
	05104621AA	2							Up to Front Axle S 482213/Y422059
	05139361AA	2							From Front Axle S 482214/Y422060
14									PAD KIT, Disc Brake
	05103556AB	1							Bosch/Textar
	VP101790								Mopar V-Line Alternative Part
	05103790AA	1							Perrot,Textar
	VP101790								Mopar V-Line Alternative Part
15	05103635AA	2							RETAINER, Brake Hold Down SpringRight or Left
16									CALIPER, Disc Brake
	05135214AA	1							Wabco/Perrot-Without Items 7,13, Right
	05135215AA	1							Wabco/Perrot-Without Items 7,13, Left
17									ADAPTER, Disc Brake Caliper
	05135915AA	1							Bosch, Right or Left
	05135916AA	1							Wabco/Perrot, Right or Left
18									PIN KIT, Disc Brake
	05103630AA	1							Wabco/Perrot
	05103729AA	1							Bosch

SPRINTER (VA)

SERIES	LINE	BODY	ENGINE	TRANSMISSION
L = LOWLINE	3 = HD DODGE 2WD 6 = Lt. Duty DODGE 4WD 2 = Med. Duty DODGE 2WD 7 = Med. Duty DODGE 4WD	55 = Wagon 140" 54 = Wagon 118" 52 = Wagon 140" 51 = Wagon 118" 12 = Van 140" 11 = Van 118" 06 = Front Section 158" 14 = Van 118" 15 = Van 140" 16 = Van 158" 56 = Wagon 158" 01 = Chassis Forward Control 118" 02 = Chassis Forward Control 140"	EX8 = Engine-2.7L I5 Mercedes Turbo Diesel	DGJ = Transmission-5-Spd. Automatic,W5A580

AR = use ase required - = Non illustrrated part

Brakes,Rear,272MM
Figure 5-210

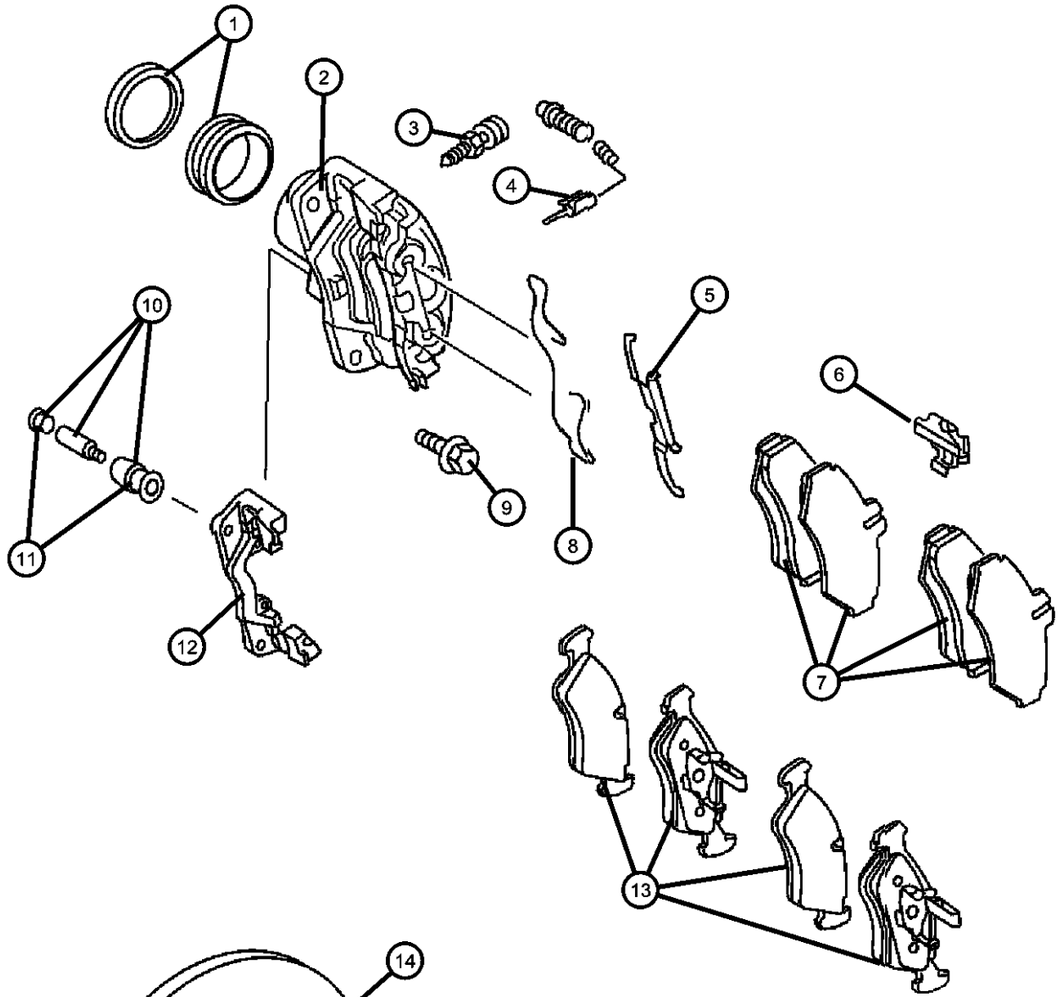

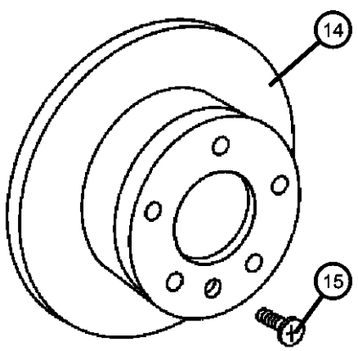

ITEM	PART NUMBER	QTY	LINE	SERIES	BODY	ENGINE	TRANS	TRIM	DESCRIPTION
Note: You must check the brand name on the old caliper to determine which one to order.									
1									SEAL, Caliper Piston
	05139263AA	1	6, 2						Teves
	05139264AA	1	2, 6						Bosch
2									CALIPER, Disc Brake
	05103741AA	1	2, 6						Bosch-Without Item 7, Left
	05103742AA	1	2, 6						Bosch-Without Item 7, Right
	05135897AA	1	2, 6						Teves-Without Item 13, Right
	05135898AA	1	2, 6						Teves-Without Item 13, Left
3									BLEEDER SCREW, Brake
	05139245AA	1	2, 6						Teves
	05139258AA	1	2, 6						Bosch
4	05103583AB	2	2, 3, 6, 7						SENSOR, Brake wear
5	05139265AA	1	2, 3, 6, 7						SPRING, Retainer, Teves/Jurid
6	05103634AA	1	2, 6						CLIP, Brake Anti-Rattle
7									PAD KIT, Disc Brake
	05103557AA	1	2, 6						Bosch/Ferodo-With Hardware
	05139260AA	1	2, 6						Bosch/Jurid-Without Hardware
8	05139266AA	1	2, 6						SPRING, Retainer, Teves/Textar
9	06104234AA	2							SCREW
10									PIN KIT, Disc Brake
	05103632AA	1							Teves
	05103729AA	1							Bosch
11	05114556AA	1							BUSHING, Caliper
12									ADAPTER, Disc Brake Caliper
	05103633AA	1							Bosch
	05135747AA	1							Teves
13	05103550AA	1	2, 3, 6, 7						PAD KIT, Disc Brake, Teves/Jurid

SPRINTER (VA)

SERIES	LINE	BODY	ENGINE	TRANSMISSION
L = LOWLINE	3 = HD DODGE 2WD 6 = Lt. Duty DODGE 4WD 2 = Med. Duty DODGE 2WD 7 = Med. Duty DODGE 4WD	55 = Wagon 140" 54 = Wagon 118" 52 = Wagon 140" 51 = Wagon 118" 12 = Van 140" 11 = Van 118" 06 = Front Section 158" 14 = Van 118" 15 = Van 140" 16 = Van 158" 56 = Wagon 158" 01 = Chassis Forward Control 118" 02 = Chassis Forward Control 140"	EX8 = Engine-2.7L I5 Mercedes Turbo Diesel	DGJ = Transmission-5-Spd. Automatic,W5A580

Brakes,Rear,272MM
Figure 5-210

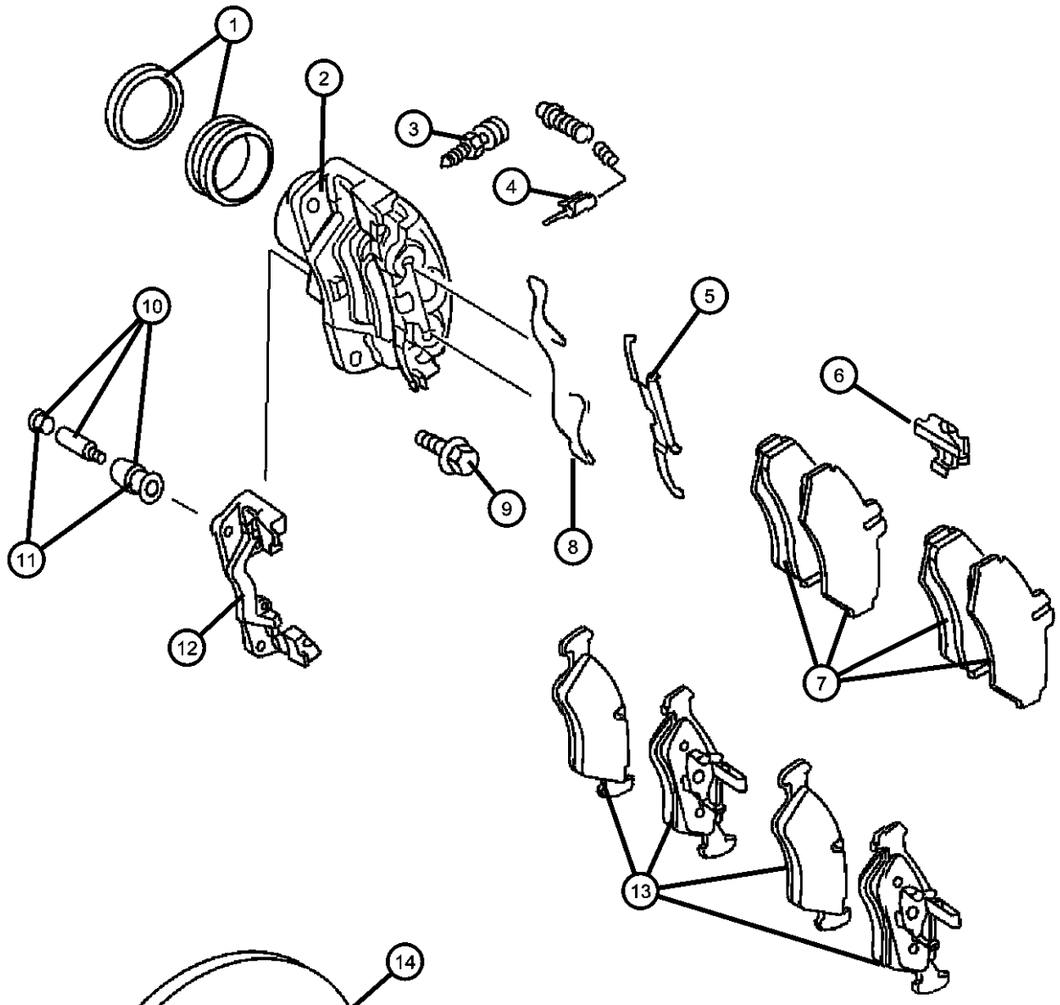

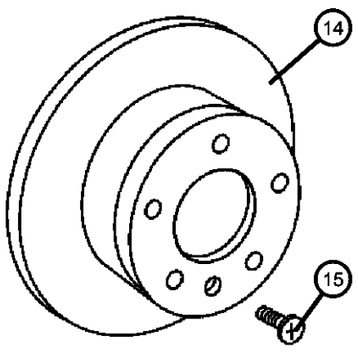

ITEM	PART NUMBER	QTY	LINE	SERIES	BODY	ENGINE	TRANS	TRIM	DESCRIPTION
14									ROTOR, Brake
	05103603AA	2	2, 6		51, 52, 54, 55, 56				
		2	2, 6		11, 12, 14, 15, 16				
15	05139361AA	2							SCREW

SPRINTER (VA)

SERIES	LINE	BODY	ENGINE	TRANSMISSION
L = LOWLINE	3 = HD DODGE 2WD 6 = Lt. Duty DODGE 4WD 2 = Med. Duty DODGE 2WD 7 = Med. Duty DODGE 4WD	55 = Wagon 140" 54 = Wagon 118" 52 = Wagon 140" 51 = Wagon 118" 12 = Van 140" 11 = Van 118" 06 = Front Section 158" 14 = Van 118" 15 = Van 140" 16 = Van 158" 56 = Wagon 158" 01 = Chassis Forward Control 118" 02 = Chassis Forward Control 140"	EX8 = Engine-2.7L I5 Mercedes Turbo Diesel	DGJ = Transmission-5-Spd. Automatic,W5A580

AR = use ase required - = Non illustrrated part

Brakes,Rear,285MM
Figure 5-220

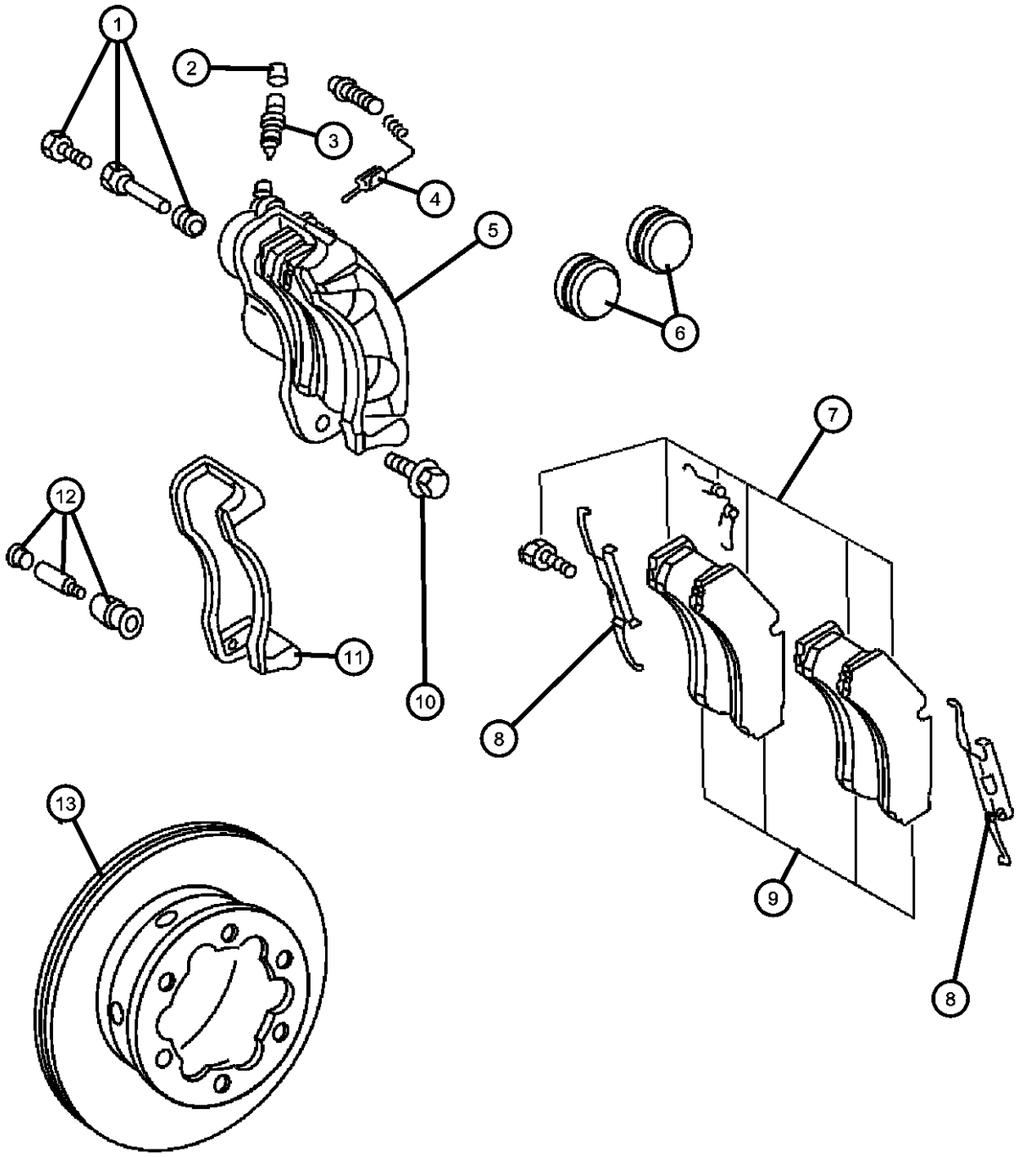

ITEM	PART NUMBER	QTY	LINE	SERIES	BODY	ENGINE	TRANS	TRIM	DESCRIPTION
Note: You must check the brand name on the old caliper to determine which one to order.									
1	05103630AA	1							PIN KIT, Disc Brake, Perrot/Wabco,Textar, Right or Left
2	05126309AA	1	7, 2, 3, 6						CAP, Bleeder
3									BLEEDER SCREW, Brake
	05139258AA	1	2, 6						Bosch
	05139259AA	1							Wabco/Perrott
4	05103583AB	2	2, 3, 6, 7						SENSOR, Brake wearRight or Left
5									CALIPER, Disc Brake
	05135212AA	1							Wabco-Without Items 7,11, Left
	05135213AA	1							Wabco-Without Items 7,11, Right
	05135917AA	1	3, 7						Bosch, Right
	05135918AA	1	3, 7						Bosch, Left
6	05139261AA	1							SEAL, Caliper Piston, Bosch, Right or Left
7	05103790AA	1							PAD KIT, Disc Brake, Wabco/Perrott, Right or Left
	VP101790								Mopar V-Line Alternative Part
8	05103635AA	2							RETAINER, Brake Hold Down Spring, Bosch, Right or Left
9	05103556AB	1							PAD KIT, Disc Brake, Bosch
	VP101790								Mopar V-Line Alternative Part
10	05139464AA	4							SCREW
11									ADAPTER, Disc Brake Caliper
	05135915AA	1							Bosch, Right or Left
	05135916AA	1							Wabco, Right or Left
12	05103729AA	1							PIN KIT, Disc Brake, Bosch, Right or Left
13	05103606AA	2	3, 7						ROTOR, BrakeRight or Left

SPRINTER (VA)

SERIES	LINE	BODY	ENGINE	TRANSMISSION
L = LOWLINE	3 = HD DODGE 2WD 6 = Lt. Duty DODGE 4WD 2 = Med. Duty DODGE 2WD 7 = Med. Duty DODGE 4WD	55 = Wagon 140" 54 = Wagon 118" 52 = Wagon 140" 51 = Wagon 118" 12 = Van 140" 11 = Van 118" 06 = Front Section 158" 14 = Van 118" 15 = Van 140" 16 = Van 158" 56 = Wagon 158" 01 = Chassis Forward Control 118" 02 = Chassis Forward Control 140"	EX8 = Engine-2.7L I5 Mercedes Turbo Diesel	DGJ = Transmission-5-Spd. Automatic,W5A580

Booster
Figure 5-310

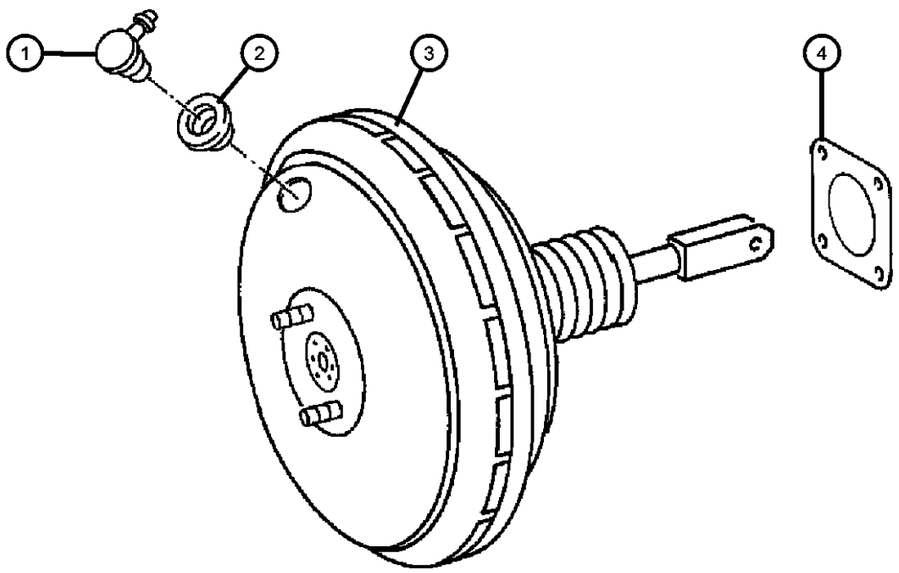

ITEM	PART NUMBER	QTY	LINE	SERIES	BODY	ENGINE	TRANS	TRIM	DESCRIPTION
1									VALVE, Brake Booster Check
	05119360AA	1	3, 7		12, 15, 16				
		1	2, 6		11, 12, 14, 15, 16				Up To Ident. No. R 400726
		1	2, 6		51, 52, 54, 55, 56				Up To Ident. No. R 400726
	05119362AA	1							
2									GASKET, Vacuum Line to Booster
	05133696AA	1	2, 6		11, 12, 14, 15, 16				
		1	2, 6		51, 52, 54, 55, 56				
		1	3, 7		12, 15, 16				
3									BOOSTER, Power Brake
	05119372AA	1	2, 6		11, 12, 14, 15, 16				Up To Ident.No. A 905511/R 400726
		1	2, 6		51, 52, 54, 55, 56				Up To Ident.No. A 905511/R 400726
		1	3, 7		12, 15, 16				Up To Ident.No. A 905511/R 400726
	05129285AA	1	2, 6		11, 12, 14, 15, 16				From Ident.No. A 905511/R 400726
		1	2, 6		51, 52, 54, 55, 56				From Ident.No. A 905511/R 400726
		1	3, 7		12, 15, 16				From Ident.No. A 905511/R 400726
4									GASKET, Booster To Dash
	05119386AA	1	2, 6		11, 12, 14, 15, 16				
		1	2, 6		51, 52, 54, 55, 56				
		1	3, 7		12, 15, 16				

SPRINTER (VA)

SERIES	LINE	BODY	ENGINE	TRANSMISSION
L = LOWLINE	3 = HD DODGE 2WD 6 = Lt. Duty DODGE 4WD 2 = Med. Duty DODGE 2WD 7 = Med. Duty DODGE 4WD	55 = Wagon 140" 54 = Wagon 118" 52 = Wagon 140" 51 = Wagon 118" 12 = Van 140" 11 = Van 118" 06 = Front Section 158" 14 = Van 118" 15 = Van 140" 16 = Van 158" 56 = Wagon 158" 01 = Chassis Forward Control 118" 02 = Chassis Forward Control 140"	EX8 = Engine-2.7L I5 Mercedes Turbo Diesel	DGJ = Transmission-5-Spd. Automatic,W5A580

Vacuum Lines
Figure 5-320

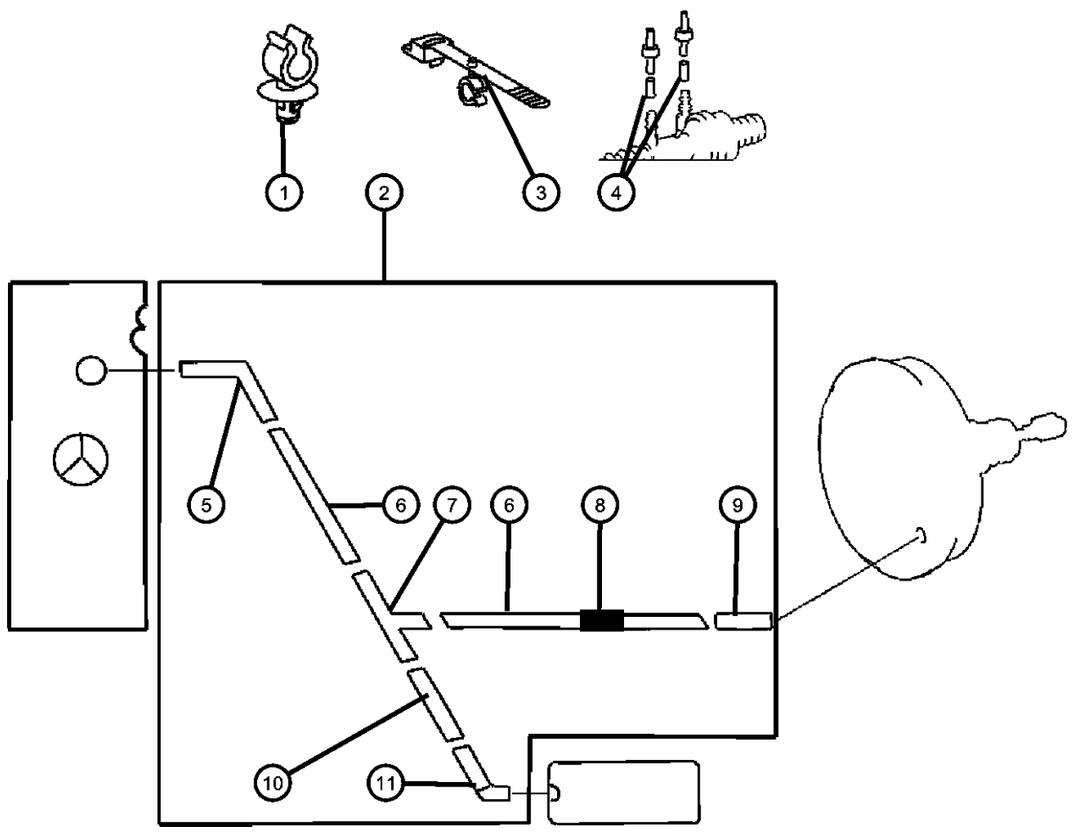

ITEM	PART NUMBER	QTY	LINE	SERIES	BODY	ENGINE	TRANS	TRIM	DESCRIPTION
1	05125578AA	2	3, 7		12, 15, 16				CLIP, Brake Line
2									HARNESS, Vacuum
	05119349AA	1	3, 7		12, 15, 16				
	05129239AA	1	2, 6		01, 02, 06				
		1	2, 6		11, 12, 14, 15, 16				
		1	2, 6		51, 52, 54, 55, 56				
3									STRAP
	06104770AA	1	2, 6		01, 02, 06				
		1	2, 6		11, 12, 14, 15, 16				
		1	2, 6		51, 52, 54, 55, 56				
		1	3, 7		12, 15, 16				
4									HOSE
	05080390AB	1	2, 6		01, 02, 06				
		1	2, 6		11, 12, 14, 15, 16				
		1	2, 6		51, 52, 54, 55, 56				
		1	3, 7		12, 15, 16				
5									CONNECTOR
	05126007AA	1	2, 6		51, 52, 54, 55, 56				
		1	2, 6		01, 02, 06				
		1	2, 6		11, 12, 14, 15, 16				
		1	3, 7		12, 15, 16				
6									HOSE, Vacuum
	05119395AA	1	3, 7		12, 15, 16				
		1	2, 6		01, 02, 06				
		1	2, 6		11, 12, 14, 15, 16				

SPRINTER (VA)

SERIES	LINE	BODY	ENGINE	TRANSMISSION
L = LOWLINE	3 = HD DODGE 2WD 6 = Lt. Duty DODGE 4WD 2 = Med. Duty DODGE 2WD 7 = Med. Duty DODGE 4WD	55 = Wagon 140" 54 = Wagon 118" 52 = Wagon 140" 51 = Wagon 118" 12 = Van 140" 11 = Van 118" 06 = Front Section 158" 14 = Van 118" 15 = Van 140" 16 = Van 158" 56 = Wagon 158" 01 = Chassis Forward Control 118" 02 = Chassis Forward Control 140"	EX8 = Engine-2.7L I5 Mercedes Turbo Diesel	DGJ = Transmission-5-Spd. Automatic,W5A580

Vacuum Lines
Figure 5-320

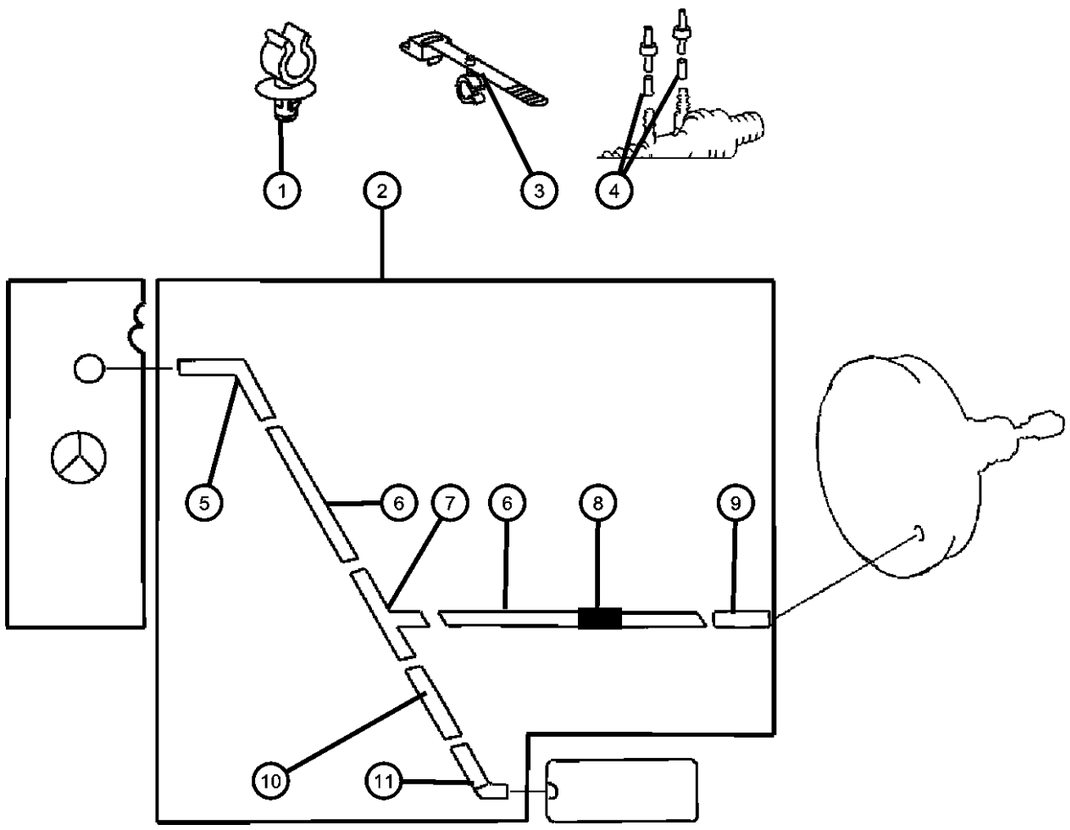

ITEM	PART NUMBER	QTY	LINE	SERIES	BODY	ENGINE	TRANS	TRIM	DESCRIPTION
		1	2, 6		51, 52, 54, 55, 56				
7	05119363AA	1	3, 7		12, 15, 16				TEE, Vacuum hose
8									WASHER
	05125507AB	2	2, 6		01, 02, 06				5 Meters Long
		2	2, 6		11, 12, 14, 15, 16				5 Meters Long
		2	2, 6		51, 52, 54, 55, 56				5 Meters Long
		2	3, 7		12, 15, 16				5 Meters Long
9									VALVE, Brake Booster Check
	05119360AA	1	2, 6		11, 12, 14, 15, 16				
		1	2, 6		51, 52, 54, 55, 56				
	05119362AA	1	2, 6		01, 02, 06				
		1	3, 7		12, 15, 16				
10									HOSE, Vacuum
	05119392AA	1							
	05119397AA	1	3, 7		12, 15, 16				
11	05125804AA	1	3, 7		12, 15, 16				COUPLING, Male
-12	05098383AA	1	2, 3, 6, 7						CAP, Nut

SPRINTER (VA)

SERIES	LINE	BODY	ENGINE	TRANSMISSION
L = LOWLINE	3 = HD DODGE 2WD 6 = Lt. Duty DODGE 4WD 2 = Med. Duty DODGE 2WD 7 = Med. Duty DODGE 4WD	55 = Wagon 140" 54 = Wagon 118" 52 = Wagon 140" 51 = Wagon 118" 12 = Van 140" 11 = Van 118" 06 = Front Section 158" 14 = Van 118" 15 = Van 140" 16 = Van 158" 56 = Wagon 158" 01 = Chassis Forward Control 118" 02 = Chassis Forward Control 140"	EX8 = Engine-2.7L I5 Mercedes Turbo Diesel	DGJ = Transmission-5-Spd. Automatic,W5A580

Vacuum Reservoir
Figure 5-330

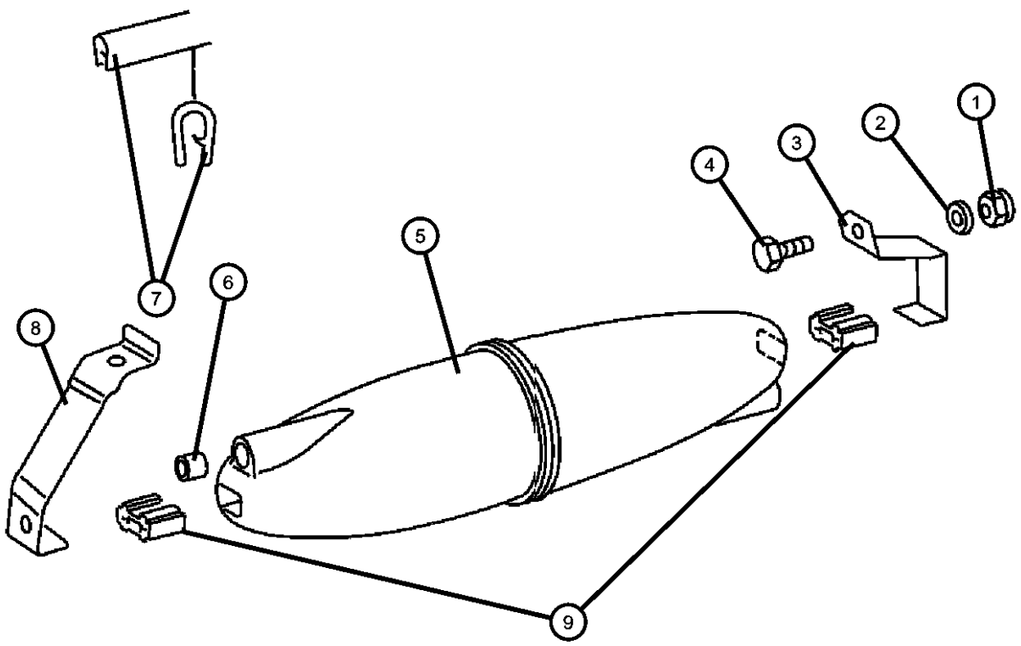

ITEM	PART NUMBER	QTY	LINE	SERIES	BODY	ENGINE	TRANS	TRIM	DESCRIPTION
1	05126237AA	1	3, 7		12, 15, 16				NUT, Hex
2	05126237AA	1							WASHER, Flat, M8, (NOT SERVICED)
3	05119388AA	1	3, 7		12, 15, 16				BRACKET, Vacuum Reservoir
4	05104655AA	1	3, 7		12, 15, 16				BOLT
5	05119357AA	1	3, 7		12, 15, 16				RESERVOIR, Vacuum
6	05119400AA	1	3, 7		12, 15, 16				SEAL, Vacuum Line
7	05132721AA	100	3, 7		12, 15, 16				GUARD, Edge, 10 Meters Long
8	05119388AA	1	3, 7		12, 15, 16				BRACKET, Vacuum Reservoir
9	05125498AA	2	3, 7		12, 15, 16				ISOLATOR

SPRINTER (VA)

SERIES	LINE	BODY	ENGINE	TRANSMISSION
L = LOWLINE	3 = HD DODGE 2WD 6 = Lt. Duty DODGE 4WD 2 = Med. Duty DODGE 2WD 7 = Med. Duty DODGE 4WD	55 = Wagon 140" 54 = Wagon 118" 52 = Wagon 140" 51 = Wagon 118" 12 = Van 140" 11 = Van 118" 06 = Front Section 158" 14 = Van 118" 15 = Van 140" 16 = Van 158" 56 = Wagon 158" 01 = Chassis Forward Control 118" 02 = Chassis Forward Control 140"	EX8 = Engine-2.7L I5 Mercedes Turbo Diesel	DGJ = Transmission-5-Spd. Automatic,W5A580

Master Cylinder
Figure 5-410

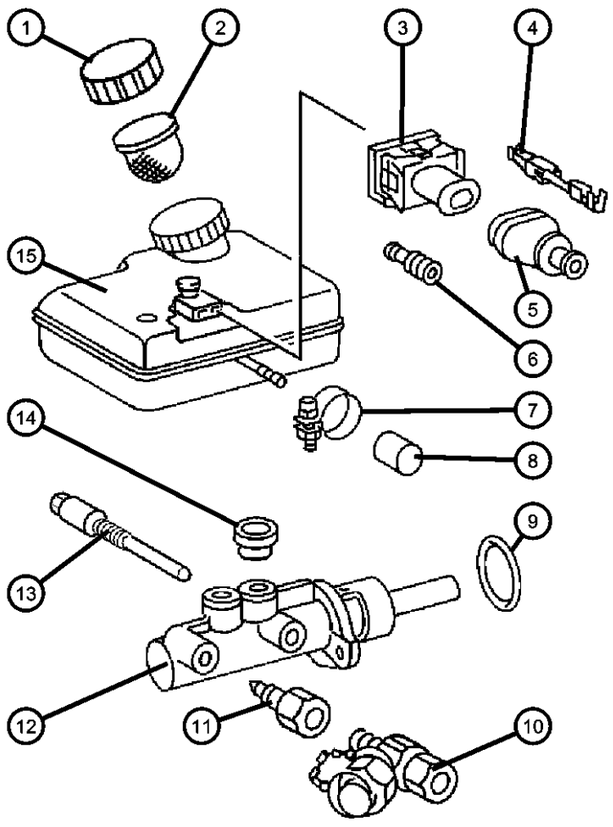

ITEM	PART NUMBER	QTY	LINE	SERIES	BODY	ENGINE	TRANS	TRIM	DESCRIPTION
Note: Sales Codes: [4DR]=Weight Variant 3.88T									
1									CAP, Master Cylinder Reservoir
	05098710AA	1	2, 6		01, 02, 06				
		1	2, 6		11, 12, 14, 15, 16				
		1	2, 6		51, 52, 54, 55, 56				
		1	3, 7		02, 06				
		1	3, 7		12, 15, 16				
2									FILTER, Brake Master Cylinder
	05119374AA	1	2, 6		01, 02, 06				
		1	2, 6		11, 12, 14, 15, 16				
		1	2, 6		51, 52, 54, 55, 56				
		1	3, 7		12, 15, 16				
3									CONNECTOR
	05120749AA	1	2, 6		01, 02, 06				
		1	2, 6		11, 12, 14, 15, 16				
		1	2, 6		51, 52, 54, 55, 56				
		1	3, 7		12, 15, 16				
4									TERMINAL
	05103880AA	99	2, 6		01, 02, 06				
		99	2, 6		11, 12, 14, 15, 16				
		99	2, 6		51, 52, 54, 55, 56				
		99	3, 7		12, 15, 16				
5									BOOT
	05120881AA	1	2, 6		01, 02, 06				

SPRINTER (VA)

SERIES	LINE	BODY	ENGINE	TRANSMISSION
L = LOWLINE	3 = HD DODGE 2WD 6 = Lt. Duty DODGE 4WD 2 = Med. Duty DODGE 2WD 7 = Med. Duty DODGE 4WD	55 = Wagon 140" 54 = Wagon 118" 52 = Wagon 140" 51 = Wagon 118" 12 = Van 140" 11 = Van 118" 06 = Front Section 158" 14 = Van 118" 15 = Van 140" 16 = Van 158" 56 = Wagon 158" 01 = Chassis Forward Control 118" 02 = Chassis Forward Control 140"	EX8 = Engine-2.7L I5 Mercedes Turbo Diesel	DGJ = Transmission-5-Spd. Automatic,W5A580

Master Cylinder
Figure 5-410

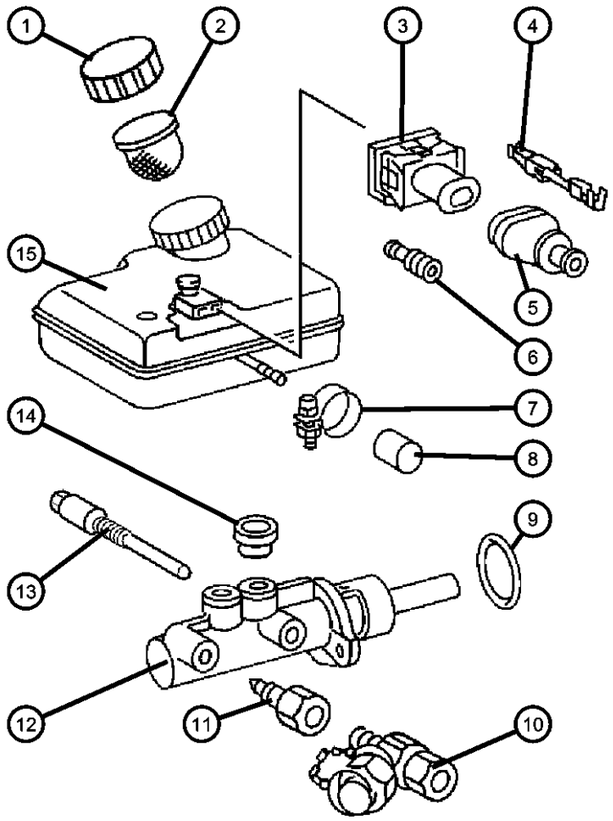

ITEM	PART NUMBER	QTY	LINE	SERIES	BODY	ENGINE	TRANS	TRIM	DESCRIPTION
		1	2, 6		11, 12, 14, 15, 16				
		1	2, 6		51, 52, 54, 55, 56				
		1	3, 7		12, 15, 16				
6									GASKET
	05103661AA	1	2, 6		01, 02, 06				
		1	2, 6		11, 12, 14, 15, 16				
		1	2, 6		51, 52, 54, 55, 56				
		1	3, 7		12, 15, 16				
7									CLAMP
	05080440AB	1	2, 6		01, 02, 06				
		1	2, 6		11, 12, 14, 15, 16				
		1	2, 6		51, 52, 54, 55, 56				
		1	3, 7		12, 15, 16				
8									CAP
	05119387AA	1	2, 6		01, 02, 06				
		1	2, 6		11, 12, 14, 15, 16				
		1	2, 6		51, 52, 54, 55, 56				
		1	3, 7		12, 15, 16				
9	05133695AA	1							GASKET
10									TEST CONNECTION, Master Cylinder
	05103640AA	2	2, 6		01, 02, 06				
		2	2, 6		11, 12, 14, 15, 16				
		2	2, 6		51, 52, 54, 55, 56				

SPRINTER (VA)

SERIES	LINE	BODY	ENGINE	TRANSMISSION
L = LOWLINE	3 = HD DODGE 2WD 6 = Lt. Duty DODGE 4WD 2 = Med. Duty DODGE 2WD 7 = Med. Duty DODGE 4WD	55 = Wagon 140" 54 = Wagon 118" 52 = Wagon 140" 51 = Wagon 118" 12 = Van 140" 11 = Van 118" 06 = Front Section 158" 14 = Van 118" 15 = Van 140" 16 = Van 158" 56 = Wagon 158" 01 = Chassis Forward Control 118" 02 = Chassis Forward Control 140"	EX8 = Engine-2.7L I5 Mercedes Turbo Diesel	DGJ = Transmission-5-Spd. Automatic,W5A580

Master Cylinder
Figure 5-410

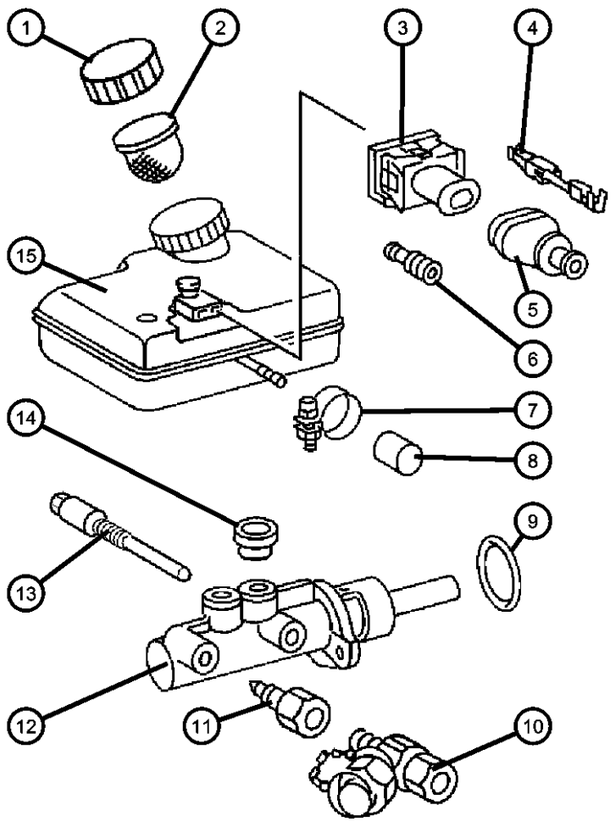

ITEM	PART NUMBER	QTY	LINE	SERIES	BODY	ENGINE	TRANS	TRIM	DESCRIPTION
		2	3, 7		12, 15, 16				
11		2							FITTING, (NOT SERVICED)
12									CYLINDER, Brake Master
	05119354AA	1	2, 6		01, 02, 06				4DR
		1	2, 6		11, 12, 14, 15, 16				4DR
		1	3, 7		12, 15, 16				
	05119355AA	1	2, 6		01, 02, 06				Without [4DR]
		1	2, 6		11, 12, 14, 15, 16				Without [4DR]
		1	2, 6		51, 52, 54, 55, 56				Without [4DR]
13		1							SCREW, (NOT SERVICED),
14	05103637AA	2							SEAL, Brake Cylinder To Reservoir
15									RESERVOIR, Brake Master Cylinder
	05119356AA	1	2, 6		01, 02, 06				
		1	2, 6		11, 12, 14, 15, 16				
		1	2, 6		51, 52, 54, 55, 56				
		1	3, 7		12, 15, 16				

SPRINTER (VA)

SERIES	LINE	BODY	ENGINE	TRANSMISSION
L = LOWLINE	3 = HD DODGE 2WD 6 = Lt. Duty DODGE 4WD 2 = Med. Duty DODGE 2WD 7 = Med. Duty DODGE 4WD	55 = Wagon 140" 54 = Wagon 118" 52 = Wagon 140" 51 = Wagon 118" 12 = Van 140" 11 = Van 118" 06 = Front Section 158" 14 = Van 118" 15 = Van 140" 16 = Van 158" 56 = Wagon 158" 01 = Chassis Forward Control 118" 02 = Chassis Forward Control 140"	EX8 = Engine-2.7L I5 Mercedes Turbo Diesel	DGJ = Transmission-5-Spd. Automatic,W5A580

Hydraulic Control Unit and ABS Module
Figure 5-420

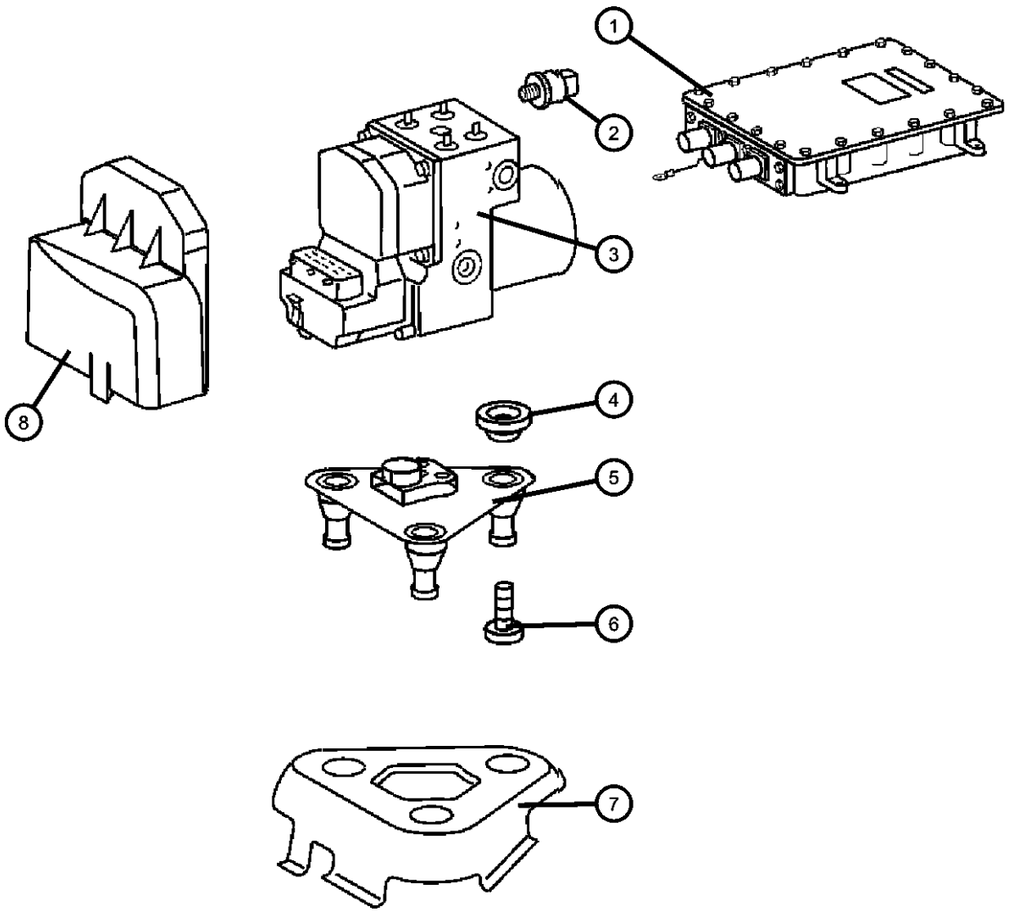

ITEM	PART NUMBER	QTY	LINE	SERIES	BODY	ENGINE	TRANS	TRIM	DESCRIPTION
NOTE:IF ANTI-CONTROL MODULE IS NOT LISTED FOR VEHICLE COMPLETE [HCU] MUST BE REPLACED Sales Codes: [BGK]=4 Wheel Anti-Lock Brakes [BNB]=Electronic Stability Program [4DR]=Weight Variant [3.88T]									
1									MODULE, Anti-lock Brakes, See Note
	05134262AA	1	2, 6		11, 12, 14, 15, 16				With [BGK + BNB]
		1	2, 6		51, 52, 54, 55, 56				With [BGK + BNB]
		1	3, 7		02, 06				With [BGK]
		1	3, 7		12, 15, 16				With [BGK]
	05161052AA	1	2, 6		01, 02, 06				With [BGK + BNB]
2	05133702AA	1	3, 7		12, 15, 16				SENDING UNIT
3									CONTROL UNIT, Anti-Lock Brake, See Note
	05136077AA	1	2, 6		11, 12, 14, 15, 16				With [BGK + BNB] / From Chassis & Date [R 636249 / 05/03/2004], Hydraulic Control Unit
		1	2, 6		51, 52, 54, 55, 56				With [BGK + BNB] / From Chassis & Date [R 636249 / 05/03/2004], Hydraulic Control Unit
	05138855AA	1	2, 6		11, 12, 14, 15, 16				With [BGK + BNB] / Up To Chassis & Date [R 636248 / 05/03/2004], Hydraulic Control Unit
		1	2, 6		51, 52, 54, 55, 56				With [BGK + BNB] / Up To Chassis & Date [R 636248 / 05/03/2004], Hydraulic Control Unit
	05127536AA	1	3, 7		12, 15, 16				With [BGK], Hydraulic Control Unit
	05129374AA	1	2, 6		01, 02, 06				With [BGK + 4DR], Hydraulic Control Unit

SPRINTER (VA)

SERIES	LINE	BODY	ENGINE	TRANSMISSION
L = LOWLINE	3 = HD DODGE 2WD 6 = Lt. Duty DODGE 4WD 2 = Med. Duty DODGE 2WD 7 = Med. Duty DODGE 4WD	55 = Wagon 140" 54 = Wagon 118" 52 = Wagon 140" 51 = Wagon 118" 12 = Van 140" 11 = Van 118" 06 = Front Section 158" 14 = Van 118" 15 = Van 140" 16 = Van 158" 56 = Wagon 158" 01 = Chassis Forward Control 118" 02 = Chassis Forward Control 140"	EX8 = Engine-2.7L I5 Mercedes Turbo Diesel	DGJ = Transmission-5-Spd. Automatic,W5A580

Hydraulic Control Unit and ABS Module
Figure 5-420

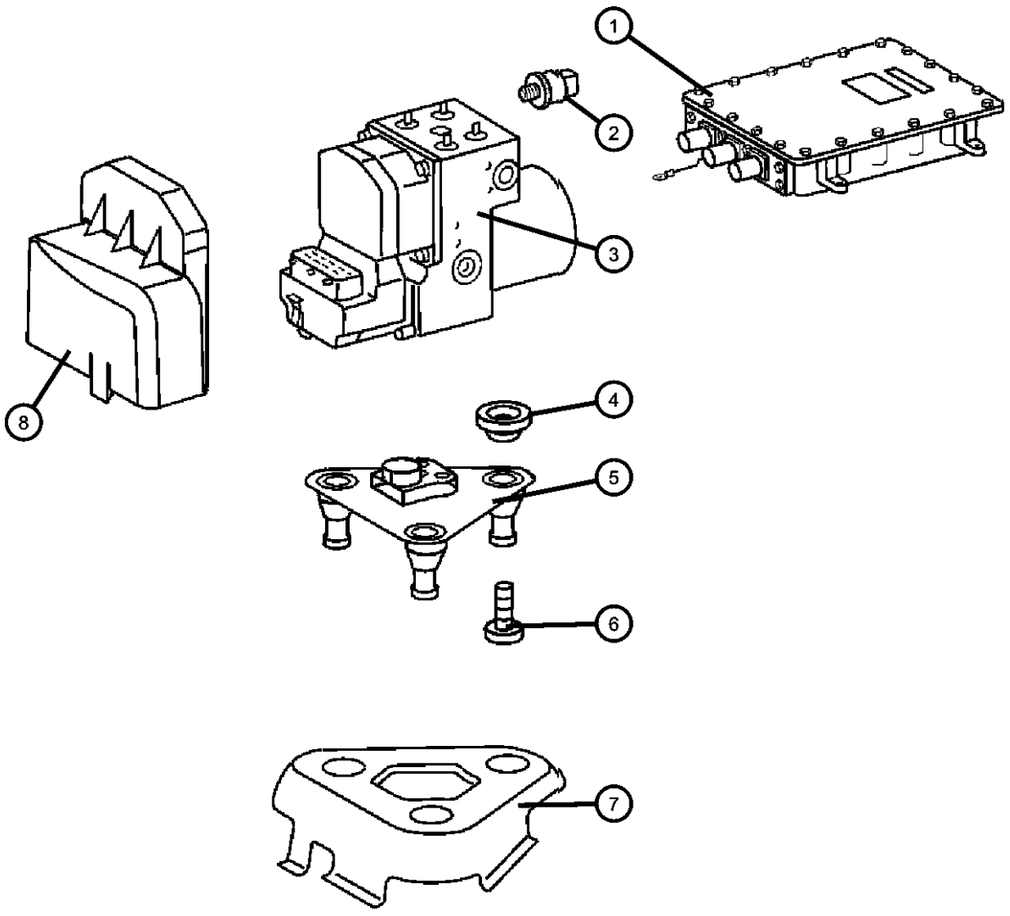

ITEM	PART NUMBER	QTY	LINE	SERIES	BODY	ENGINE	TRANS	TRIM	DESCRIPTION
		1	2, 6		11, 12, 14, 15, 16				With [BGK + 4DR], Hydraulic Control Unit
		1	2, 6		51, 52, 54, 55, 56				With [BGK + 4DR], Hydraulic Control Unit
	05140695AB	1	2, 6		01, 02, 06				With [BNB + BGK + 4DR], Hydraulic Control Unit
		1	2, 6		11, 12, 14, 15, 16				With [BNB + BGK + 4DR], Hydraulic Control Unit
		1	2, 6		51, 52, 54, 55, 56				With [BNB + BGK + 4DR], Hydraulic Control Unit
	05161051AA	1	2, 6		01, 02, 06				With [BGK + BNB], Hydraulic Control Unit
4									GROMMET, Hydraulic Control Unit
	05099283AA	3	2, 6		01, 02, 06				
		3	2, 6		11, 12, 14, 15, 16				
		3	2, 6		51, 52, 54, 55, 56				
		3	3, 7		12, 15, 16				
5									BRACKET, Hydraulic control unit, Upper
	05119383AA	1	2, 6		01, 02, 06				
		1	2, 6		11, 12, 14, 15, 16				
		1	2, 6		51, 52, 54, 55, 56				
		1	3, 7		12, 15, 16				
6									SCREW
	05126138AA	2	3, 7		12, 15, 16				
		2	2, 6		01, 02, 06				
		2	2, 6		11, 12, 14, 15, 16				
		2	2, 6		51, 52, 54, 55, 56				
7									BRACKET, Hydraulic control unit, Lower

SPRINTER (VA)

SERIES	LINE	BODY	ENGINE	TRANSMISSION
L = LOWLINE	3 = HD DODGE 2WD 6 = Lt. Duty DODGE 4WD 2 = Med. Duty DODGE 2WD 7 = Med. Duty DODGE 4WD	55 = Wagon 140" 54 = Wagon 118" 52 = Wagon 140" 51 = Wagon 118" 12 = Van 140" 11 = Van 118" 06 = Front Section 158" 14 = Van 118" 15 = Van 140" 16 = Van 158" 56 = Wagon 158" 01 = Chassis Forward Control 118" 02 = Chassis Forward Control 140"	EX8 = Engine-2.7L I5 Mercedes Turbo Diesel	DGJ = Transmission-5-Spd. Automatic,W5A580

Hydraulic Control Unit and ABS Module
Figure 5-420

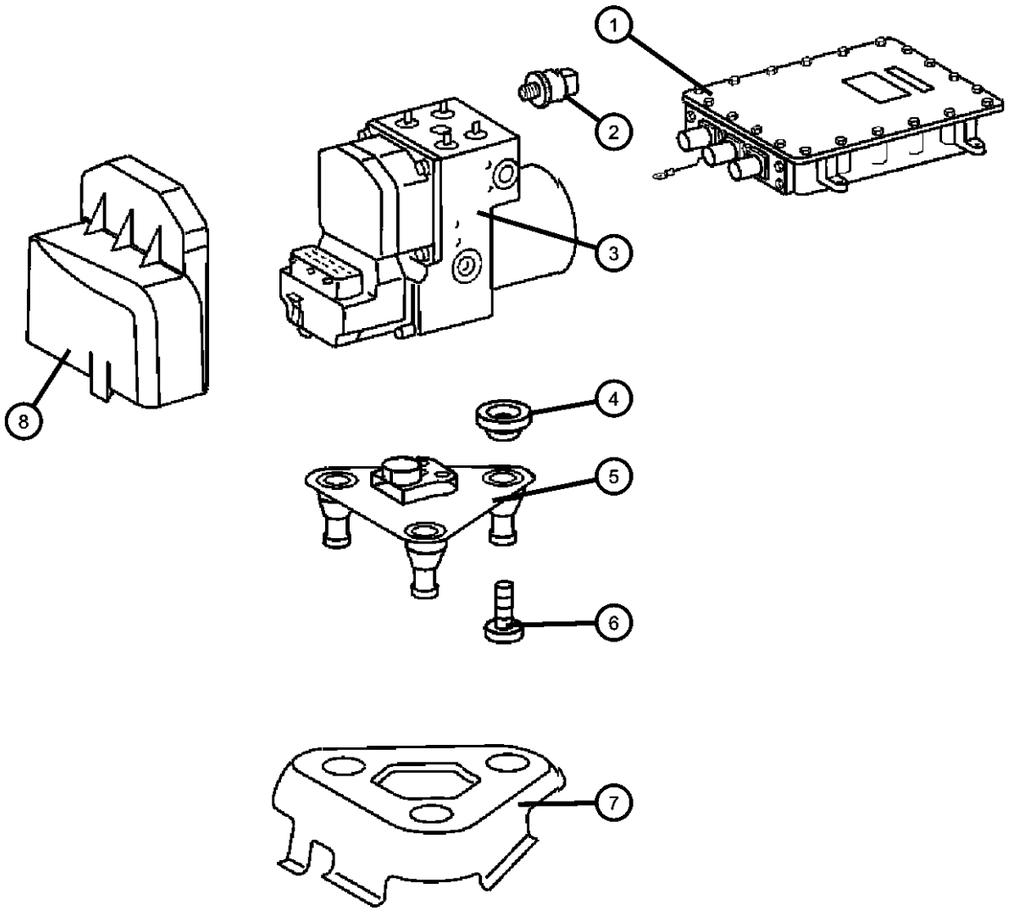

ITEM	PART NUMBER	QTY	LINE	SERIES	BODY	ENGINE	TRANS	TRIM	DESCRIPTION
	05104088AA	1	2, 6		01, 02, 06				
		1	2, 6		11, 12, 14, 15, 16				
		1	2, 6		51, 52, 54, 55, 56				
		1	3, 7		12, 15, 16				
8									COVER, Hydraulic Control Unit
	05120888AA	1	2, 6		01, 02, 06				
		1	2, 6		11, 12, 14, 15, 16				
		1	2, 6		51, 52, 54, 55, 56				
		1	3, 7		12, 15, 16				

SPRINTER (VA)

SERIES	LINE	BODY	ENGINE	TRANSMISSION
L = LOWLINE	3 = HD DODGE 2WD 6 = Lt. Duty DODGE 4WD 2 = Med. Duty DODGE 2WD 7 = Med. Duty DODGE 4WD	55 = Wagon 140" 54 = Wagon 118" 52 = Wagon 140" 51 = Wagon 118" 12 = Van 140" 11 = Van 118" 06 = Front Section 158" 14 = Van 118" 15 = Van 140" 16 = Van 158" 56 = Wagon 158" 01 = Chassis Forward Control 118" 02 = Chassis Forward Control 140"	EX8 = Engine-2.7L I5 Mercedes Turbo Diesel	DGJ = Transmission-5-Spd. Automatic,W5A580

Lines,Brake,With ABS,2500/3500 Series
Figure 5-510

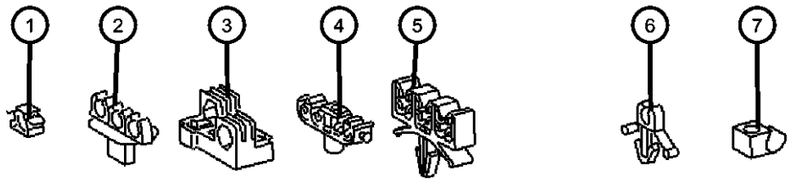

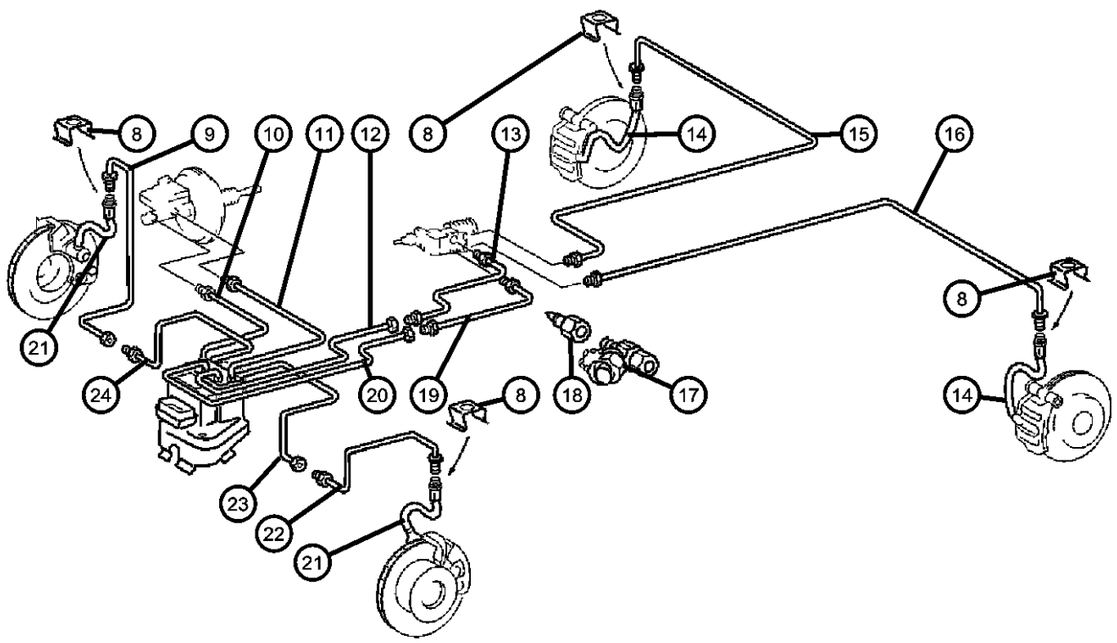

ITEM	PART NUMBER	QTY	LINE	SERIES	BODY	ENGINE	TRANS	TRIM	DESCRIPTION
Note;Sales Codes;									
[WDG]=Wheels - 16 X 6 STEEL									
[3S6]=Test Connections Hydraulic Brake									
[5AC]=118" Wheelbase									
[5AE]=140" Wheelbase									
[5AF]=158" Wheelbase									
1									CLIP, Brake Line
	05119689AA	4	2, 6		01, 02, 06				As Required
		4	2, 6		16, 11, 12, 14, 15				As Required
		4	2, 6		51, 52, 54, 55, 56				As Required
		4	3, 7		12, 15, 16				As Required
2	05132788AA	4							CLIP, Brake LineAs Required
3									BRACKET, Brake Tube
	05119331AA	1	2, 6		11, 12, 14, 15, 16				As Required
		1	2, 6		01, 02, 06				As Required
		1	2, 6		51, 52, 54, 55, 56				As Required
		1	3, 7		12, 15, 16				As Required
4									CLIP, Brake Line
	05119330AA	2	2, 6		01, 02, 06				As Required
		2	2, 6		11, 12, 14, 15, 16				As Required
		2	2, 6		51, 52, 54, 55, 56				As Required
		2	3, 7		12, 15, 16				As Required
5									CLIP, Brake Line
	05119328AA	1	2, 6		11, 12, 14, 15, 16				As Required
		1	2, 6		01, 02, 06				As Required
		1	2, 6		51, 52, 54, 55, 56				As Required
		1	3, 7		16, 12, 15				As Required

SPRINTER (VA)

SERIES	LINE	BODY	ENGINE	TRANSMISSION
L = LOWLINE	3 = HD DODGE 2WD 6 = Lt. Duty DODGE 4WD 2 = Med. Duty DODGE 2WD 7 = Med. Duty DODGE 4WD	55 = Wagon 140" 54 = Wagon 118" 52 = Wagon 140" 51 = Wagon 118" 12 = Van 140" 11 = Van 118" 06 = Front Section 158" 14 = Van 118" 15 = Van 140" 16 = Van 158" 56 = Wagon 158" 01 = Chassis Forward Control 118" 02 = Chassis Forward Control 140"	EX8 = Engine-2.7L I5 Mercedes Turbo Diesel	DGJ = Transmission-5-Spd. Automatic,W5A580

Lines,Brake,With ABS,2500/3500 Series
Figure 5-510

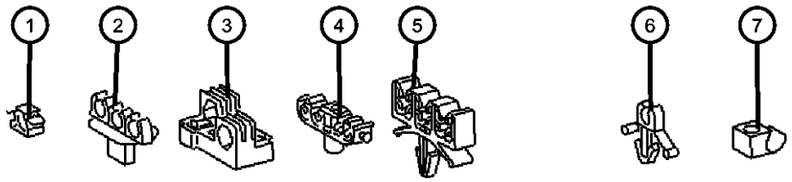

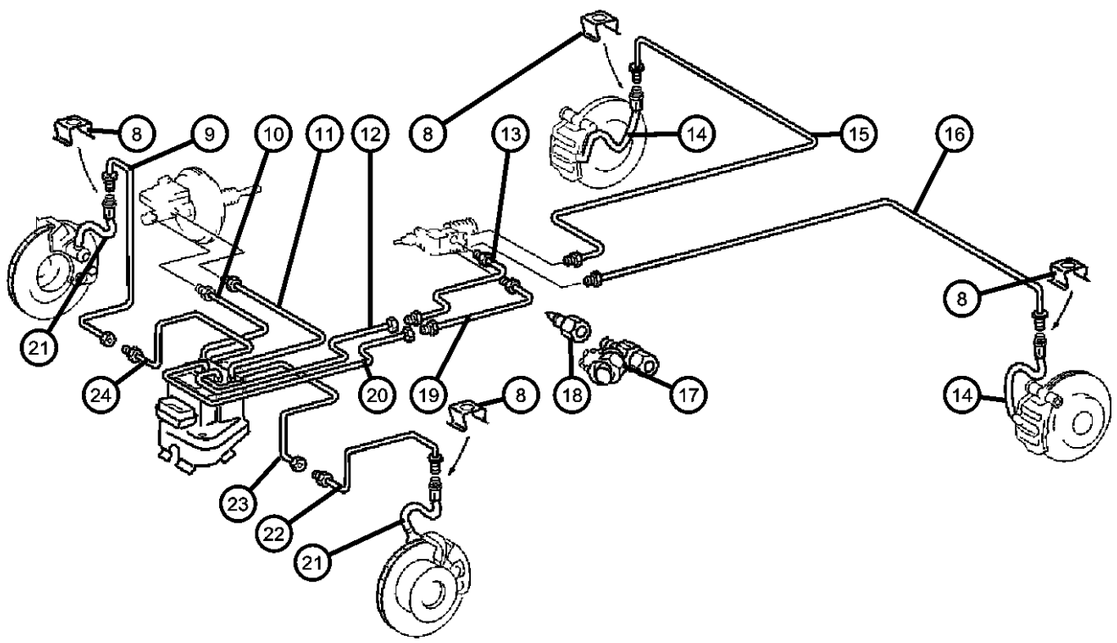

ITEM	PART NUMBER	QTY	LINE	SERIES	BODY	ENGINE	TRANS	TRIM	DESCRIPTION
6									CLIP, Brake Line
	05119329AA	2	2, 6		01, 02, 06				As Required
		2	2, 6		11, 12, 14, 15, 16				As Required
		2	2, 6		51, 52, 54, 55, 56				As Required
		1	3, 7		12, 15, 16				As Required
7									CLIP, Brake Line
	05125566AA	1	3, 7						As Required
		3	2, 6		01, 02, 06				As Required
		3	2, 6		11, 12, 14, 15, 16				As Required
		3	2, 6		51, 52, 54, 55, 56				As Required
8									CLIP, Spring
	05098140AA	2	3, 7		12, 15, 16				Front or Rear, Right or Left
		1	2, 6		01, 02, 06				Front or Rear, Right or Left
		1	2, 6		11, 12, 14, 15, 16				Front or Rear, Right or Left
		1	2, 6		51, 52, 54, 55, 56				Front or Rear, Right or Left
9									TUBE, Brake
	05119163AA	1	3, 7		12, 15, 16				[WDG], Right
	05119198AA	1	2, 6		01, 02, 06				, Right
		1	2, 6		01, 02, 06				[WDG], Right
		1	2, 6		11, 12, 14, 15, 16				[WDG], Right
		1	2, 6		51, 52, 54, 55, 56				[WDG], Right
		1	2, 6		11, 12, 14, 15, 16				Right
		1	2, 6		51, 52, 54, 55, 56				Right

SPRINTER (VA)

SERIES	LINE	BODY	ENGINE	TRANSMISSION
L = LOWLINE	3 = HD DODGE 2WD 6 = Lt. Duty DODGE 4WD 2 = Med. Duty DODGE 2WD 7 = Med. Duty DODGE 4WD	55 = Wagon 140" 54 = Wagon 118" 52 = Wagon 140" 51 = Wagon 118" 12 = Van 140" 11 = Van 118" 06 = Front Section 158" 14 = Van 118" 15 = Van 140" 16 = Van 158" 56 = Wagon 158" 01 = Chassis Forward Control 118" 02 = Chassis Forward Control 140"	EX8 = Engine-2.7L I5 Mercedes Turbo Diesel	DGJ = Transmission-5-Spd. Automatic,W5A580

Lines,Brake,With ABS,2500/3500 Series
Figure 5-510

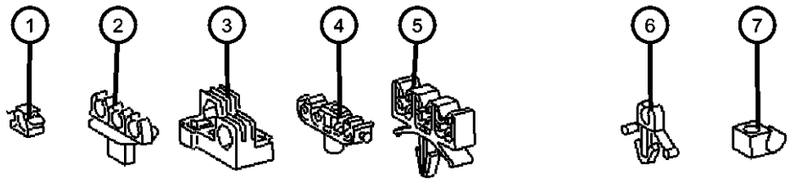

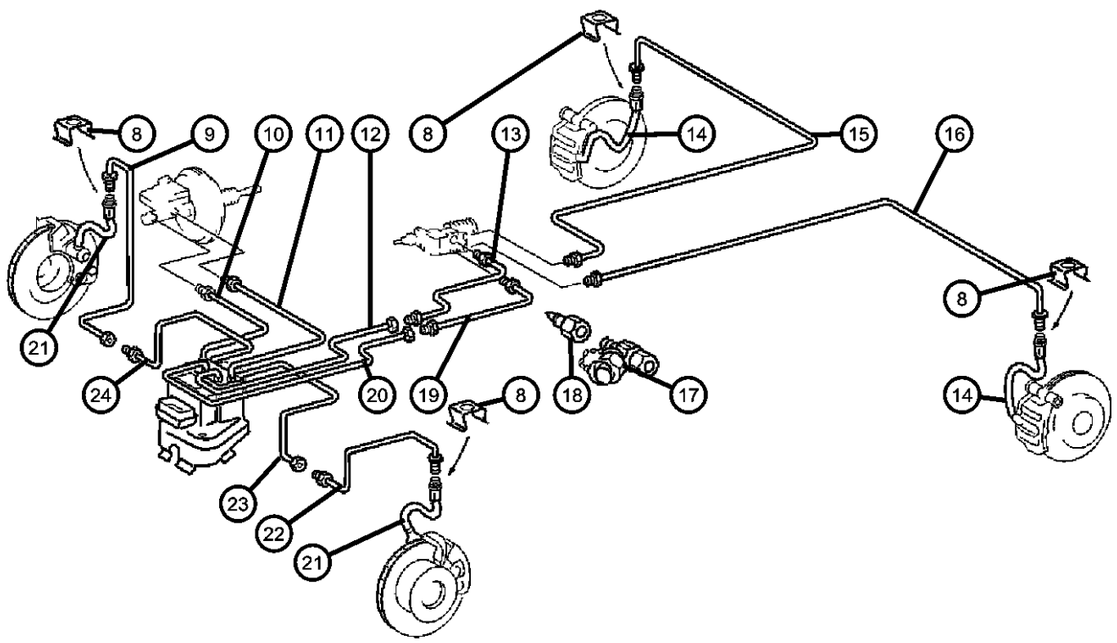

ITEM	PART NUMBER	QTY	LINE	SERIES	BODY	ENGINE	TRANS	TRIM	DESCRIPTION
10									TUBE, Brake
	05119218AA	1	2, 6		01, 02, 06				Secondary
		1	2, 6		11, 12, 14, 15, 16				Secondary
		1	2, 6		51, 52, 54, 55, 56				Secondary
		1	3, 7		12, 15, 16				Secondary
	05119220AA	1	2, 6		06, 01, 02				[3S6], Secondary
		1	2, 6		11, 12, 14, 15, 16				[3S6], Secondary
		1	2, 6		51, 52, 54, 55, 56				[3S6], Secondary
		1	3, 7		12, 15, 16				[3S6], Secondary
	05129153AA	1	2, 6		01, 02, 06				
		1	2, 6		11, 12, 14, 15, 16				
		1	2, 6		51, 52, 54, 55, 56				
11									TUBE, Brake
	05119217AA	1	3, 7		12, 15, 16				Primary
	05119219AA	1	2, 6		01, 02, 06				[3S6], Primary
		1	2, 6		11, 12, 14, 15, 16				[3S6], Primary
		1	2, 6		51, 52, 54, 55, 56				[3S6], Primary
		1	3, 7		12, 15, 16				[3S6], Primary
	05129157AA	1	2, 6		01, 02, 06				
		1	2, 6		01, 02, 06				Primary
		1	2, 6		11, 12, 14, 15, 16				Primary
		1	2, 6		51, 52, 54, 55, 56				Primary
		1	2, 6		11, 12, 14, 15, 16				

SPRINTER (VA)

SERIES	LINE	BODY	ENGINE	TRANSMISSION
L = LOWLINE	3 = HD DODGE 2WD 6 = Lt. Duty DODGE 4WD 2 = Med. Duty DODGE 2WD 7 = Med. Duty DODGE 4WD	55 = Wagon 140" 54 = Wagon 118" 52 = Wagon 140" 51 = Wagon 118" 12 = Van 140" 11 = Van 118" 06 = Front Section 158" 14 = Van 118" 15 = Van 140" 16 = Van 158" 56 = Wagon 158" 01 = Chassis Forward Control 118" 02 = Chassis Forward Control 140"	EX8 = Engine-2.7L I5 Mercedes Turbo Diesel	DGJ = Transmission-5-Spd. Automatic,W5A580

Lines,Brake,With ABS,2500/3500 Series
Figure 5-510

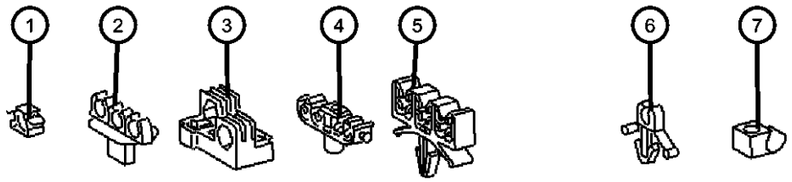

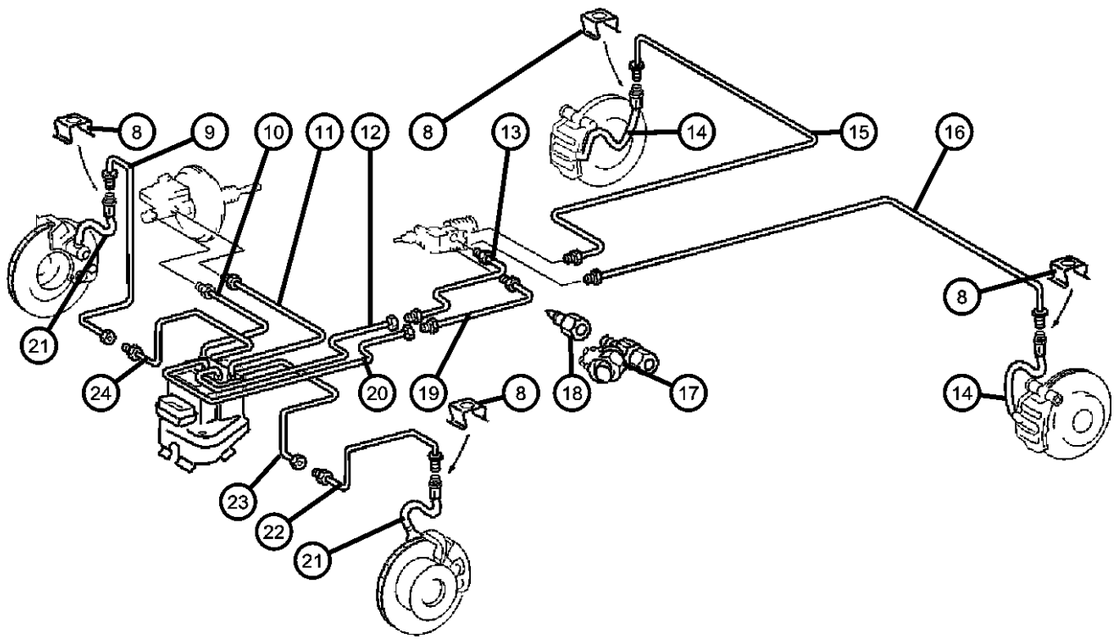

ITEM	PART NUMBER	QTY	LINE	SERIES	BODY	ENGINE	TRANS	TRIM	DESCRIPTION
		1	2, 6		51, 52, 54, 55, 56				
12									TUBE, Brake
	05119197AA	1	2, 6		01, 02, 06				Right Rear
		1	2, 6		11, 12, 14, 15, 16				Right Rear
		1	2, 6		51, 52, 54, 55, 56				Right Rear
		1	3, 7		12, 15, 16				Right Rear
13									TUBE, Brake
	05133704AA	1	2, 6		01				[5AC]
		1	2, 6		11, 14				[5AC]
		1	2, 6		51, 54				[5AC]
	05133709AA	1	2, 6		02				[5AE]
	05133710AA	1	3, 7		06				[5AF]
		1	2, 6		12, 15				[5AE]
		1	2, 6		52, 55				[5AE]
	05133711AA	1	3, 7		02				[5AE]
		1	3, 7		12, 15				[5AE]
	05133728AA	1	2, 6		06				[5AF]
		1	2, 6		16				[5AF]
		1	3, 7		16				[5AF]
		1	2, 6		56				[5AF]
14									HOSE, Brake
	05104087AA	2	2, 6		01, 02, 06				Rear, Right or Left
		2	2, 6		11, 12, 14, 15, 16				Rear, Right or Left
		2	2, 6		51, 52, 54, 55, 56				Rear, Right or Left
	05119313AA	2	3, 7		12, 15, 16				Rear, Right or Left
15									TUBE, Brake

SPRINTER (VA)

SERIES	LINE	BODY	ENGINE	TRANSMISSION
L = LOWLINE	3 = HD DODGE 2WD 6 = Lt. Duty DODGE 4WD 2 = Med. Duty DODGE 2WD 7 = Med. Duty DODGE 4WD	55 = Wagon 140" 54 = Wagon 118" 52 = Wagon 140" 51 = Wagon 118" 12 = Van 140" 11 = Van 118" 06 = Front Section 158" 14 = Van 118" 15 = Van 140" 16 = Van 158" 56 = Wagon 158" 01 = Chassis Forward Control 118" 02 = Chassis Forward Control 140"	EX8 = Engine-2.7L I5 Mercedes Turbo Diesel	DGJ = Transmission-5-Spd. Automatic,W5A580

Lines,Brake,With ABS,2500/3500 Series
Figure 5-510

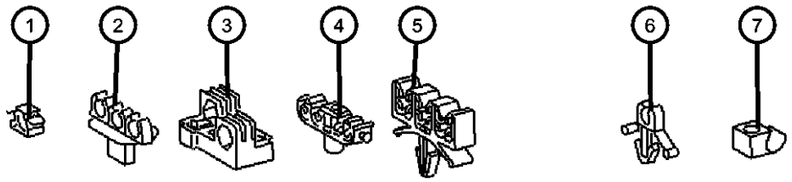

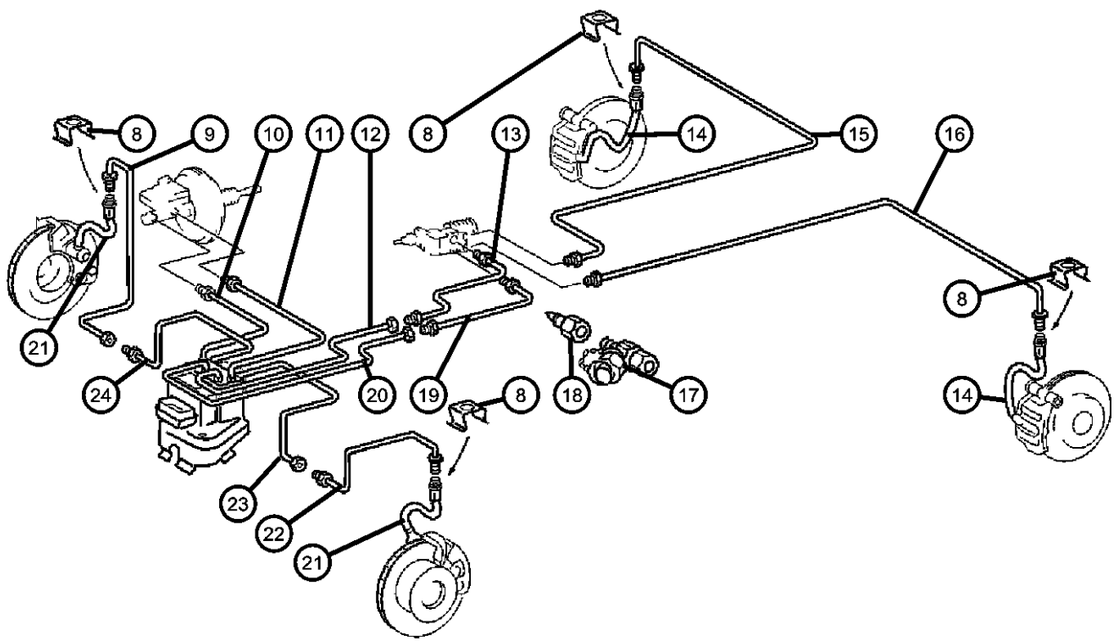

ITEM	PART NUMBER	QTY	LINE	SERIES	BODY	ENGINE	TRANS	TRIM	DESCRIPTION
	05133712AA	1	2, 6		01, 02, 06				Without [5NZ], Right
		1	2, 6		11, 12, 14, 15, 16				Without [5NZ], Right
		1	2, 6		51, 52, 54, 55, 56				Without [5NZ], Right
		1	3, 7		15, 16, 12				[BGK], Right
	05133715AA	1	3, 7		12, 15, 16				[BGK,3S6], Right
	05133731AA	1	2, 6						Right
16									TUBE, Brake
	05133708AA	1	3, 7		12, 15, 16				[BGK,3S6], Left
	05133712AA	1	3, 7		12, 15, 16				[BGK], Left
	05133729AA	1	2, 6						Left
	05133732AA	1	2, 6		51, 52, 54, 55, 56				Without [5NZ], Left
		1	2, 6		11, 12, 14, 15, 16				Without [5NZ], Left
17									TEST CONNECTION, Master Cylinder
	05103640AA	2	2, 6		01, 02, 06				
		2	2, 6		11, 12, 14, 15, 16				
		2	2, 6		51, 52, 54, 55, 56				
		2	3, 7		12, 15, 16				
18									FITTING, Orifice
	05103636AA	2	2, 6		51, 52, 54, 55, 56				
		2	3, 7		16, 12, 15				
		2	2, 6		01, 02, 06				
		2	2, 6		11, 12, 14, 15, 16				
19									TUBE, Brake
	05133704AA	1	2, 6		01				[5AC]

SPRINTER (VA)

SERIES	LINE	BODY	ENGINE	TRANSMISSION
L = LOWLINE	3 = HD DODGE 2WD 6 = Lt. Duty DODGE 4WD 2 = Med. Duty DODGE 2WD 7 = Med. Duty DODGE 4WD	55 = Wagon 140" 54 = Wagon 118" 52 = Wagon 140" 51 = Wagon 118" 12 = Van 140" 11 = Van 118" 06 = Front Section 158" 14 = Van 118" 15 = Van 140" 16 = Van 158" 56 = Wagon 158" 01 = Chassis Forward Control 118" 02 = Chassis Forward Control 140"	EX8 = Engine-2.7L I5 Mercedes Turbo Diesel	DGJ = Transmission-5-Spd. Automatic,W5A580

Lines,Brake,With ABS,2500/3500 Series
Figure 5-510

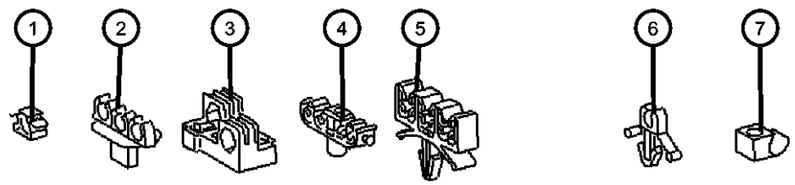

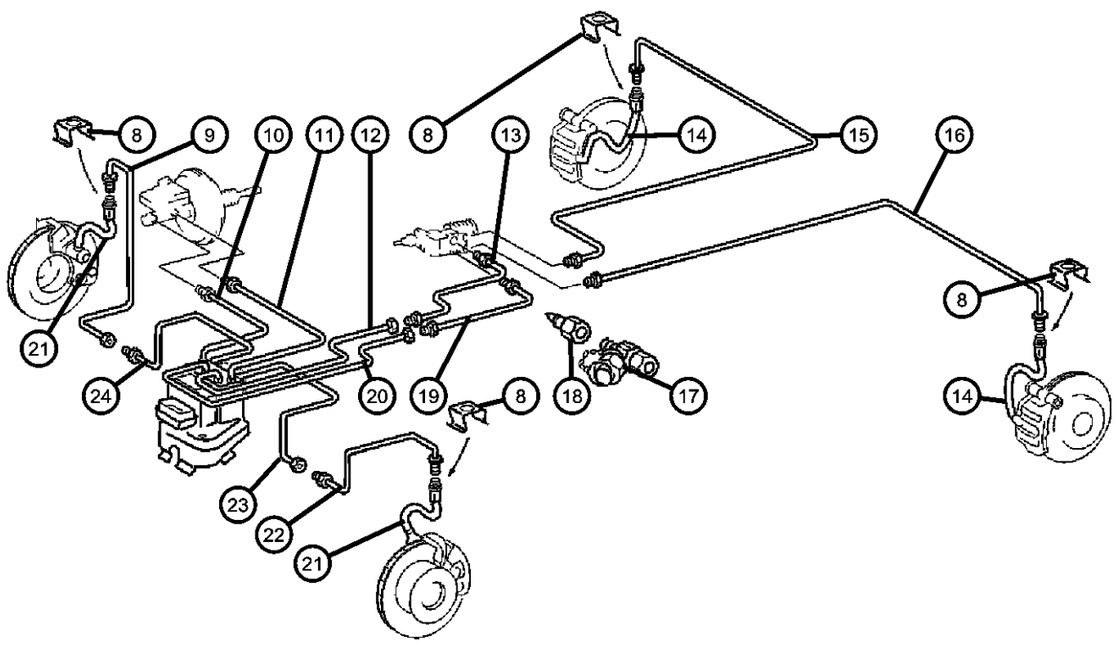

ITEM	PART NUMBER	QTY	LINE	SERIES	BODY	ENGINE	TRANS	TRIM	DESCRIPTION
		1	2, 6		11, 14				[5AC]
	05133709AA	1	2, 6		02				[5AE]
		1	2, 6		12, 15				[5AE]
		1	2, 6		52, 55				[5AE]
		1	2, 6		51, 54				[5AC]
		1	3, 7		02				[5AC]
		1	3, 7		12, 15				[5AE]
	05133710AA	1	3, 7		06				[5AC]
		1	3, 7		16				[5AF]
	05133728AA	1	2, 6		06				[5AF]
		1	2, 6		16				[5AF]
		1	2, 6		56				[5AF]
20									TUBE, Brake
	05119196AA	1	2, 6		11, 12, 14, 15, 16				Left Rear
		1	2, 6		51, 52, 54, 55, 56				Left Rear
		1	3, 7		12, 15, 16				Left Rear
		1	2, 6		01, 02, 06				Left Rear
21	05104087AA	2	2, 3, 6, 7						HOSE, Brake, Front
22									TUBE, Brake
	05119160AA	1	3, 7		12, 15, 16				[BGK], Left
	05119185AA	1	2, 6		02, 06, 01				, Left
		1	2, 6		11, 12, 14, 15, 16				Left
		1	2, 6		01, 02, 06				[WDG], Left
		1	2, 6		11, 12, 14, 15, 16				[WDG], Left
		1	2, 6		51, 52, 54, 55, 56				[WDG], Left

SPRINTER (VA)

SERIES	LINE	BODY	ENGINE	TRANSMISSION
L = LOWLINE	3 = HD DODGE 2WD 6 = Lt. Duty DODGE 4WD 2 = Med. Duty DODGE 2WD 7 = Med. Duty DODGE 4WD	55 = Wagon 140" 54 = Wagon 118" 52 = Wagon 140" 51 = Wagon 118" 12 = Van 140" 11 = Van 118" 06 = Front Section 158" 14 = Van 118" 15 = Van 140" 16 = Van 158" 56 = Wagon 158" 01 = Chassis Forward Control 118" 02 = Chassis Forward Control 140"	EX8 = Engine-2.7L I5 Mercedes Turbo Diesel	DGJ = Transmission-5-Spd. Automatic,W5A580

Lines,Brake,With ABS,2500/3500 Series
Figure 5-510

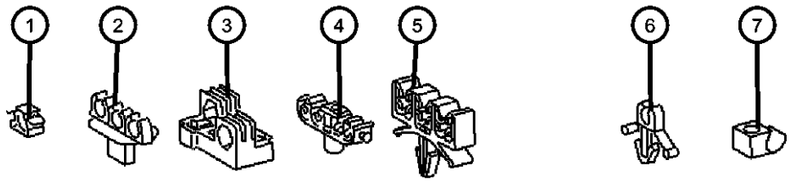

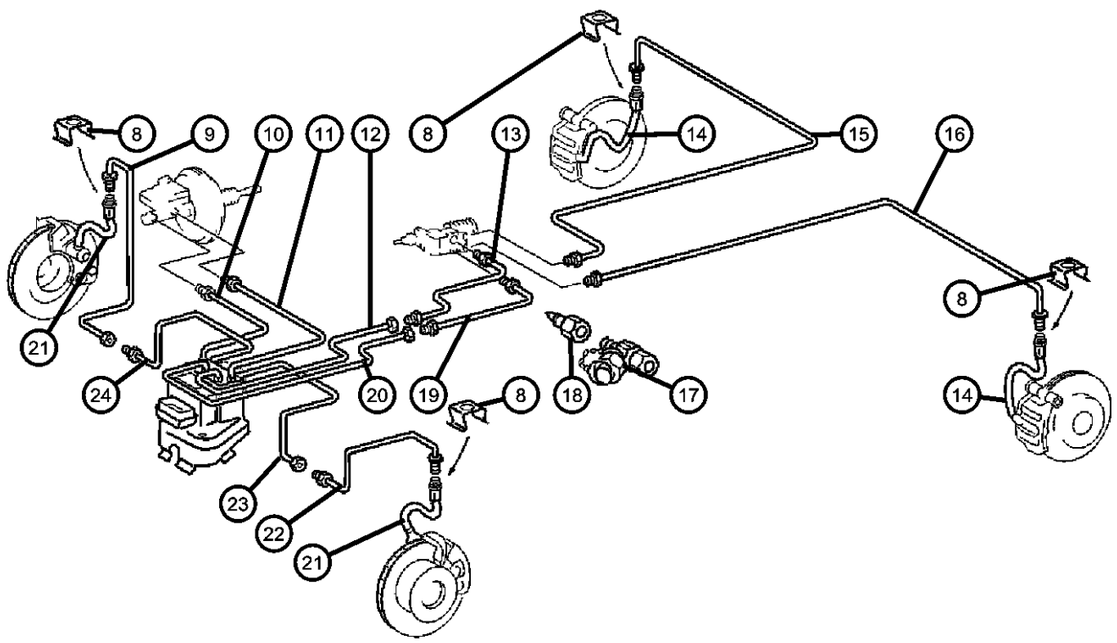

ITEM	PART NUMBER	QTY	LINE	SERIES	BODY	ENGINE	TRANS	TRIM	DESCRIPTION
		1	2, 6		51, 52, 54, 55, 56				Left
23									TUBE, Brake
	05133706AA	1	2, 6		51, 52, 54, 55, 56				Left
		1	3, 7		12, 15, 16				Left
		1	2, 6		01, 02, 06				Left
		1	2, 6		11, 12, 14, 15, 16				Left
24									TUBE, Brake
	05133708AA	1	2, 6		01, 02, 06				Right
		1	2, 6		11, 12, 14, 15, 16				Right
		1	3, 7		12, 15, 16				Right
		1	2, 6		51, 52, 54, 55, 56				Right
-25									UNION, Brake Line Repair
	05098485AA	1	3, 7		12, 15, 16				
		1	2, 6		01, 02, 06				
		1	2, 6		11, 12, 14, 15, 16				
		1	2, 6		51, 52, 54, 55, 56				

SPRINTER (VA)

SERIES	LINE	BODY	ENGINE	TRANSMISSION
L = LOWLINE	3 = HD DODGE 2WD 6 = Lt. Duty DODGE 4WD 2 = Med. Duty DODGE 2WD 7 = Med. Duty DODGE 4WD	55 = Wagon 140" 54 = Wagon 118" 52 = Wagon 140" 51 = Wagon 118" 12 = Van 140" 11 = Van 118" 06 = Front Section 158" 14 = Van 118" 15 = Van 140" 16 = Van 158" 56 = Wagon 158" 01 = Chassis Forward Control 118" 02 = Chassis Forward Control 140"	EX8 = Engine-2.7L I5 Mercedes Turbo Diesel	DGJ = Transmission-5-Spd. Automatic,W5A580

Brake, Power Regulator
Figure 5-520

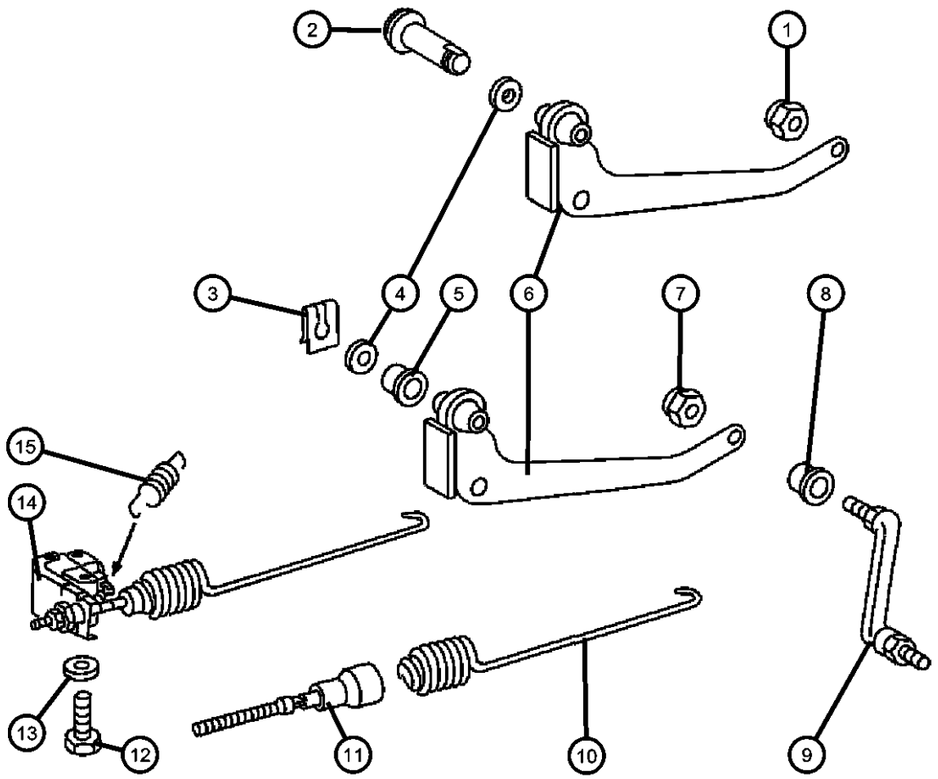

ITEM	PART NUMBER	QTY	LINE	SERIES	BODY	ENGINE	TRANS	TRIM	DESCRIPTION
Note: Sales Codes [BGK]= 4-WHEEL ANTI-LOCK [5AF]=158" WHEELBASE									
1	05097684AA	2	2, 3, 6, 7						NUT
2	05119385AA	1	3, 7		12, 15, 16				PIN
3									CLIP, Retaining
	05126244AA	1	2, 6		01, 02, 06				
		1	2, 6		11, 12, 14, 15, 16				
		1	2, 6		51, 52, 54, 55, 56				
		1	3, 7		12, 15, 16				
4									WASHER
	05133725AA	1	2, 6		01, 02, 06				
		1	2, 6		11, 12, 14, 15, 16				
		1	2, 6		51, 52, 54, 55, 56				
		1	3, 7		12, 15, 16				
5									BUSHING, Pedal Shaft
	05096550AA	2	2, 6		01, 02, 06				
		2	2, 6		11, 12, 14, 15, 16				
		2	2, 6		51, 52, 54, 55, 56				
		2	3, 7		12, 15, 16				
6									LEVER, Load Sensing
	05119337AA	1	2, 6		01, 02, 06				
		1	2, 6		11, 12, 14, 15, 16				
		1	2, 6		51, 52, 54, 55, 56				
	05119339AA	1	3, 7		12, 15, 16				
7									NUT, Hex

SPRINTER (VA)

SERIES	LINE	BODY	ENGINE	TRANSMISSION
L = LOWLINE	3 = HD DODGE 2WD 6 = Lt. Duty DODGE 4WD 2 = Med. Duty DODGE 2WD 7 = Med. Duty DODGE 4WD	55 = Wagon 140" 54 = Wagon 118" 52 = Wagon 140" 51 = Wagon 118" 12 = Van 140" 11 = Van 118" 06 = Front Section 158" 14 = Van 118" 15 = Van 140" 16 = Van 158" 56 = Wagon 158" 01 = Chassis Forward Control 118" 02 = Chassis Forward Control 140"	EX8 = Engine-2.7L I5 Mercedes Turbo Diesel	DGJ = Transmission-5-Spd. Automatic,W5A580

Brake, Power Regulator
Figure 5-520

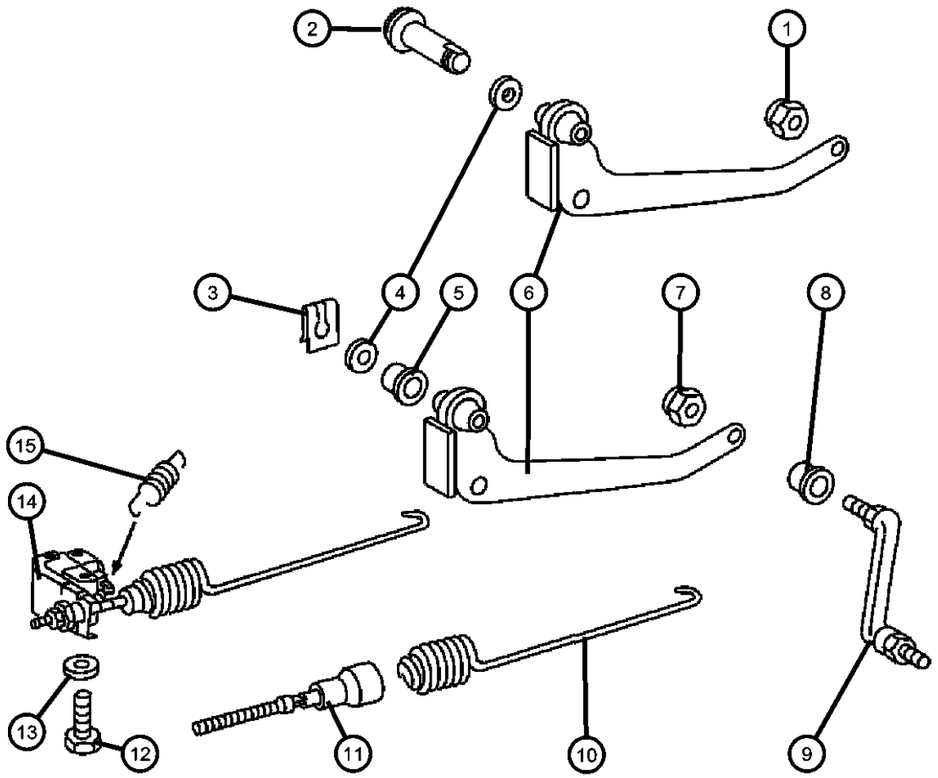

ITEM	PART NUMBER	QTY	LINE	SERIES	BODY	ENGINE	TRANS	TRIM	DESCRIPTION
	05097685AA	2	2, 6		01, 02, 06				
		2	2, 6		11, 12, 14, 15, 16				
		2	2, 6		51, 52, 54, 55, 56				
		2	3, 7		12, 15, 16				
8									BUSHING
	05118723AA	2	2, 6		01, 02, 06				
		2	2, 6		11, 12, 14, 15, 16				
		2	2, 6		51, 52, 54, 55, 56				
		2	3, 7		12, 15, 16				
9									LINK, Load Sensing
	05103920AA	1	2, 6		01, 02, 06				
		1	2, 6		11, 12, 14, 15, 16				
		1	2, 6		51, 52, 54, 55, 56				
		1	3, 7		12, 15, 16				
10									SPRING, Load Sensing Lever
	05133722AA	1	2, 6		01, 02, 06				
		1	2, 6		11, 12, 14, 15, 16				
		1	3, 7		12, 15, 16				
11									SCREW, Load Sensing Adjustment
	05133723AA	1	2, 6		01, 02, 06				
		1	2, 6		11, 12, 14, 15, 16				
		1	2, 6		51, 52, 54, 55, 56				
		1	3, 7		12, 15, 16				
12									BOLT, M8

SPRINTER (VA)

SERIES	LINE	BODY	ENGINE	TRANSMISSION
L = LOWLINE	3 = HD DODGE 2WD 6 = Lt. Duty DODGE 4WD 2 = Med. Duty DODGE 2WD 7 = Med. Duty DODGE 4WD	55 = Wagon 140" 54 = Wagon 118" 52 = Wagon 140" 51 = Wagon 118" 12 = Van 140" 11 = Van 118" 06 = Front Section 158" 14 = Van 118" 15 = Van 140" 16 = Van 158" 56 = Wagon 158" 01 = Chassis Forward Control 118" 02 = Chassis Forward Control 140"	EX8 = Engine-2.7L I5 Mercedes Turbo Diesel	DGJ = Transmission-5-Spd. Automatic,W5A580

Brake, Power Regulator
Figure 5-520

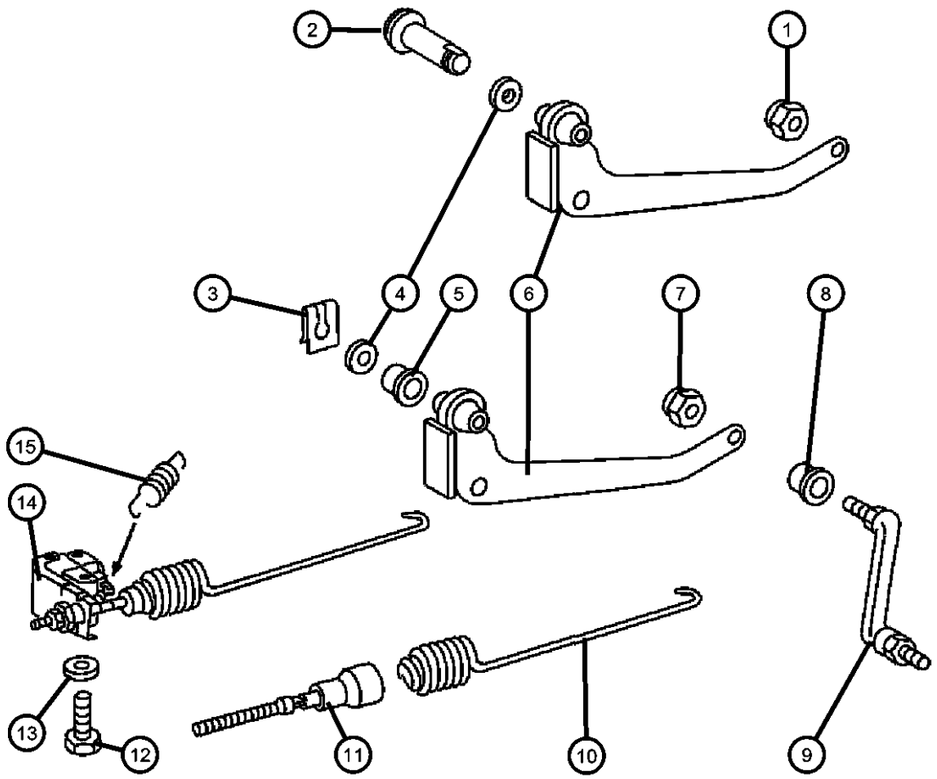

ITEM	PART NUMBER	QTY	LINE	SERIES	BODY	ENGINE	TRANS	TRIM	DESCRIPTION
	05133724AA	2	2, 6		01, 02, 06				Without [5NZ]
		2	2, 6		11, 12, 14, 15, 16				Without [5NZ]
		2	2, 6		51, 52, 54, 55, 56				Without [5NZ]
		2	3, 7		12, 15, 16				
13									WASHER
	05104613AA	1	2, 6		01, 02, 06				
		1	2, 6		11, 12, 14, 15, 16				
		1	2, 6		51, 52, 54, 55, 56				
		1	3, 7		12, 15, 16				
14									VALVE, Load sensing
	05103824AA	1	2, 6		01, 02, 06				Without [5NZ]
		1	2, 6		11, 12, 14, 15, 16				Without [5NZ]
		1	2, 6		51, 52, 54, 55, 56				Without [5NZ]
		1	3, 7		12, 15, 16				[BGK]
15									SPRING, Load Sensing Valve
	05133720AA	1	2, 6		01, 02, 06				
		1	2, 6		11, 12, 14, 15, 16				
		1	2, 6		51, 52, 54, 55, 56				
		1	3, 7		12, 15, 16				

SPRINTER (VA)

SERIES	LINE	BODY	ENGINE	TRANSMISSION
L = LOWLINE	3 = HD DODGE 2WD 6 = Lt. Duty DODGE 4WD 2 = Med. Duty DODGE 2WD 7 = Med. Duty DODGE 4WD	55 = Wagon 140" 54 = Wagon 118" 52 = Wagon 140" 51 = Wagon 118" 12 = Van 140" 11 = Van 118" 06 = Front Section 158" 14 = Van 118" 15 = Van 140" 16 = Van 158" 56 = Wagon 158" 01 = Chassis Forward Control 118" 02 = Chassis Forward Control 140"	EX8 = Engine-2.7L I5 Mercedes Turbo Diesel	DGJ = Transmission-5-Spd. Automatic,W5A580

Pedal Brake
Figure 5-610

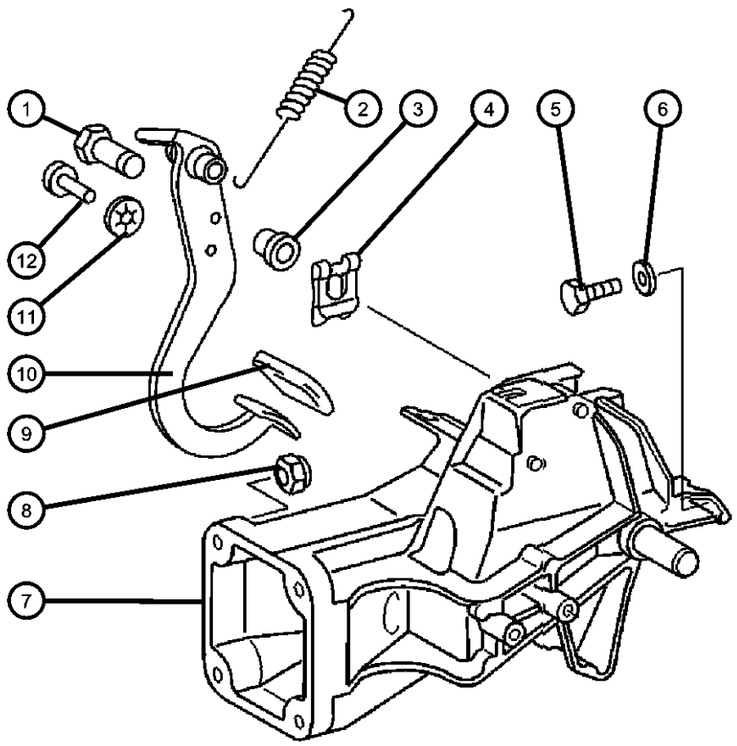

ITEM	PART NUMBER	QTY	LINE	SERIES	BODY	ENGINE	TRANS	TRIM	DESCRIPTION
1									PIN, Brake Pedal Pivot Shaft
	05117903AA	1	2, 6		01, 02, 06				
	05117911AA	1	2, 6		11, 12, 14, 15, 16				
		1	2, 6		51, 52, 54, 55, 56				
		1	3, 7		12, 15, 16				
2									SPRING, Brake Pedal Return
	05125847AA	1	2, 6		01, 02, 06				
		1	2, 6		11, 12, 14, 15, 16				
		1	2, 6		51, 52, 54, 55, 56				
		1	3, 7		12, 15, 16				
3									BUSHING, Pedal Shaft
	05096550AA	2	2, 6		01, 02, 06				
		2	2, 6		11, 12, 14, 15, 16				
		2	3, 7		12, 15, 16				
		2	2, 6		51, 52, 54, 55, 56				
4									RETAINER
	05125872AA	1	2, 6		01, 02, 06				
		1	2, 6		51, 52, 54, 55, 56				
		1	2, 6		11, 12, 14, 15, 16				
		1	3, 7		12, 15, 16				
5									BOLT
	05126231AA	1	2, 6		51, 52, 54, 55, 56				Bracket to Fire Wall, Mounting
		1	2, 6		01, 02, 06				Bracket to Fire Wall, Mounting
		1	2, 6		11, 12, 14, 15, 16				Bracket to Fire Wall, Mounting

SPRINTER (VA)

SERIES	LINE	BODY	ENGINE	TRANSMISSION
L = LOWLINE	3 = HD DODGE 2WD 6 = Lt. Duty DODGE 4WD 2 = Med. Duty DODGE 2WD 7 = Med. Duty DODGE 4WD	55 = Wagon 140" 54 = Wagon 118" 52 = Wagon 140" 51 = Wagon 118" 12 = Van 140" 11 = Van 118" 06 = Front Section 158" 14 = Van 118" 15 = Van 140" 16 = Van 158" 56 = Wagon 158" 01 = Chassis Forward Control 118" 02 = Chassis Forward Control 140"	EX8 = Engine-2.7L I5 Mercedes Turbo Diesel	DGJ = Transmission-5-Spd. Automatic,W5A580

Pedal Brake
Figure 5-610

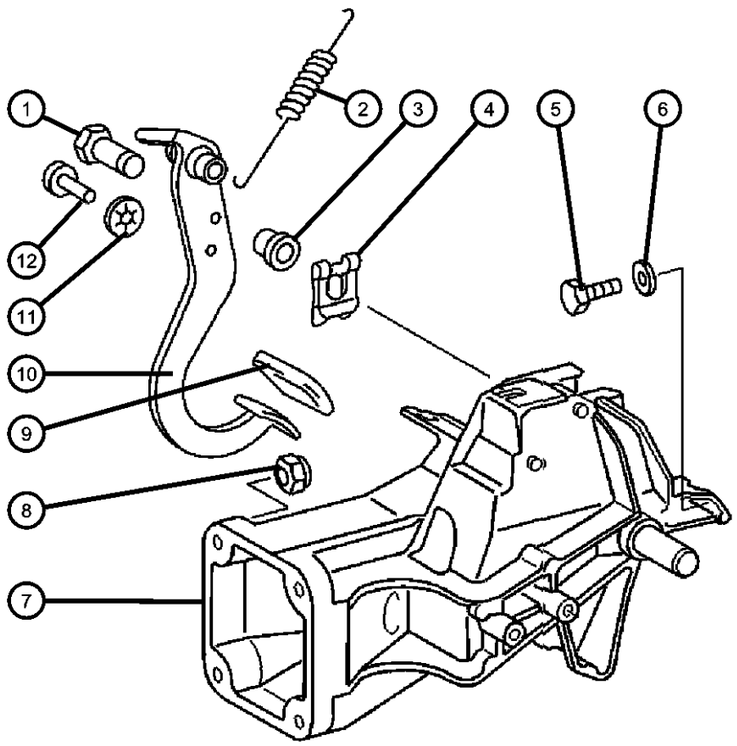

ITEM	PART NUMBER	QTY	LINE	SERIES	BODY	ENGINE	TRANS	TRIM	DESCRIPTION
		1	3, 7		12, 15, 16				Bracket to Fire Wall, Mounting
6									WASHER, Flat
	05098108AA	1	2, 6		01, 02, 06				Bracket to Fire Wall, Mounting
		1	2, 6		11, 12, 14, 15, 16				Bracket to Fire Wall, Mounting
		1	2, 6		51, 52, 54, 55, 56				Bracket to Fire Wall, Mounting
		1	3, 7		12, 15, 16				Bracket to Fire Wall, Mounting
7									BRACKET, Brake Pedal
	05128211AA	1	2, 6		01, 02, 06				
		1	2, 6		11, 12, 14, 15, 16				
		1	2, 6		51, 52, 54, 55, 56				
		1	3, 7		12, 15, 16				
8									NUT
	06104716AA	4	2, 6		01, 02, 06				
		4	2, 6		11, 12, 14, 15, 16				
		4	2, 6		51, 52, 54, 55, 56				
		4	3, 7		12, 15, 16				
9									PAD, Pedal
	05104017AA	1	2, 6		01, 02, 06				Brake
	05117904AA	1	3, 7		12, 15, 16				Without [DGJ], Brake
		1	2, 6		11, 12, 14, 15, 16				Without [DGJ], Brake
		1	2, 6		51, 52, 54, 55, 56				Without [DGJ], Brake
10									PEDAL, Brake
	05104045AA	1	2, 6		01, 02, 06				
		1	2, 6		11, 12, 14, 15, 16				

SPRINTER (VA)

SERIES	LINE	BODY	ENGINE	TRANSMISSION
L = LOWLINE	3 = HD DODGE 2WD 6 = Lt. Duty DODGE 4WD 2 = Med. Duty DODGE 2WD 7 = Med. Duty DODGE 4WD	55 = Wagon 140" 54 = Wagon 118" 52 = Wagon 140" 51 = Wagon 118" 12 = Van 140" 11 = Van 118" 06 = Front Section 158" 14 = Van 118" 15 = Van 140" 16 = Van 158" 56 = Wagon 158" 01 = Chassis Forward Control 118" 02 = Chassis Forward Control 140"	EX8 = Engine-2.7L I5 Mercedes Turbo Diesel	DGJ = Transmission-5-Spd. Automatic,W5A580

Pedal Brake
Figure 5-610

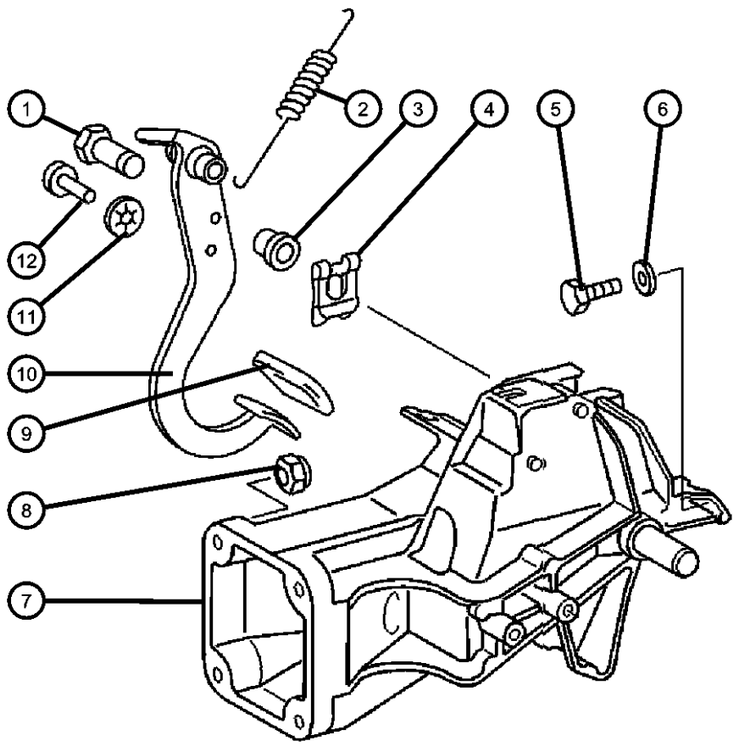

ITEM	PART NUMBER	QTY	LINE	SERIES	BODY	ENGINE	TRANS	TRIM	DESCRIPTION
		1	2, 6		51, 52, 54, 55, 56				
		1	3, 7		12, 15, 16				
11									CLIP, Spring
	05097670AA	1	2, 6		11, 12, 14, 15, 16				
		1	2, 6		01, 02, 06				
		1	3, 7		12, 15, 16				
		1	2, 6		51, 52, 54, 55, 56				
12									PIN, Brake Pedal Pivot Shaft
	05117903AA	1	2, 6		51, 52, 54, 55, 56				
		1	2, 6		01, 02, 06				
		1	2, 6		11, 12, 14, 15, 16				
		1	3, 7		12, 15, 16				

SPRINTER (VA)

SERIES	LINE	BODY	ENGINE	TRANSMISSION
L = LOWLINE	3 = HD DODGE 2WD 6 = Lt. Duty DODGE 4WD 2 = Med. Duty DODGE 2WD 7 = Med. Duty DODGE 4WD	55 = Wagon 140" 54 = Wagon 118" 52 = Wagon 140" 51 = Wagon 118" 12 = Van 140" 11 = Van 118" 06 = Front Section 158" 14 = Van 118" 15 = Van 140" 16 = Van 158" 56 = Wagon 158" 01 = Chassis Forward Control 118" 02 = Chassis Forward Control 140"	EX8 = Engine-2.7L I5 Mercedes Turbo Diesel	DGJ = Transmission-5-Spd. Automatic,W5A580

Group - 7

Cooling

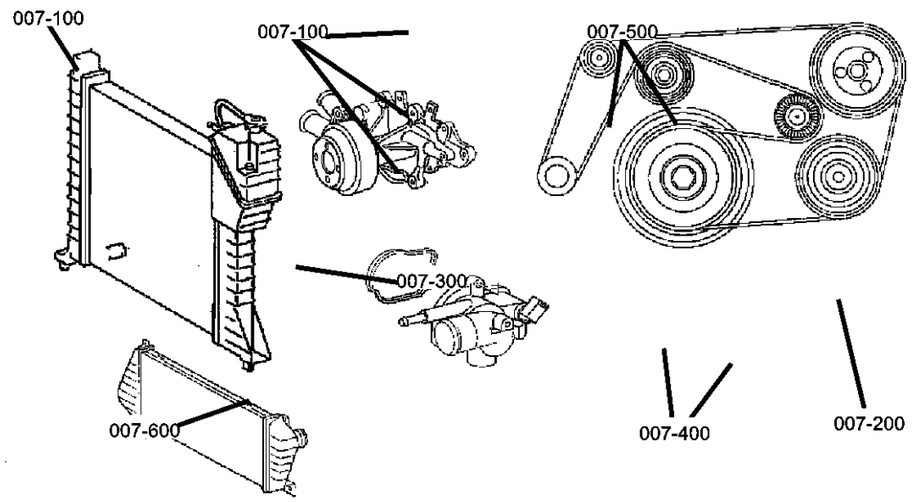

007-100 Radiator and Related Parts 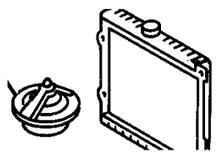	**007-200** Water Pump and Related Parts 	**007-400** Pulleys and Related Parts 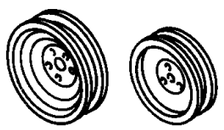	**007-500** Drive Belts 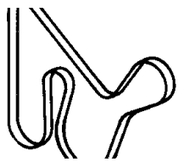
007-600 Lines, Transmission Oil Cooler 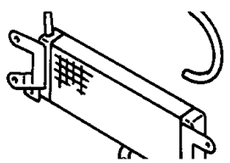	**007-700** Grilles 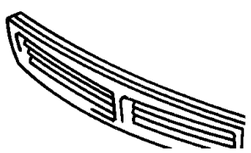		

Group - 7 Cooling

Illustration Title — Group-Fig. No.

Radiator and Related Parts
Radiator And Related parts ..... Fig. 7 - 110
Charge Air Intercooler ..... Fig. 7 - 120

Water Pump and Related Parts
Water Pump And Related Parts ..... Fig. 7 - 210

Pulleys and Related Parts
Drive pulleys ..... Fig. 7 - 410

Drive Belts
Drive Belts ..... Fig. 7 - 510

Lines, Transmission Oil Cooler
Oil Cooler Lines ..... Fig. 7 - 610

Grilles
Grille And Related Parts ..... Fig. 7 - 710

Radiator And Related parts
Figure 7-110

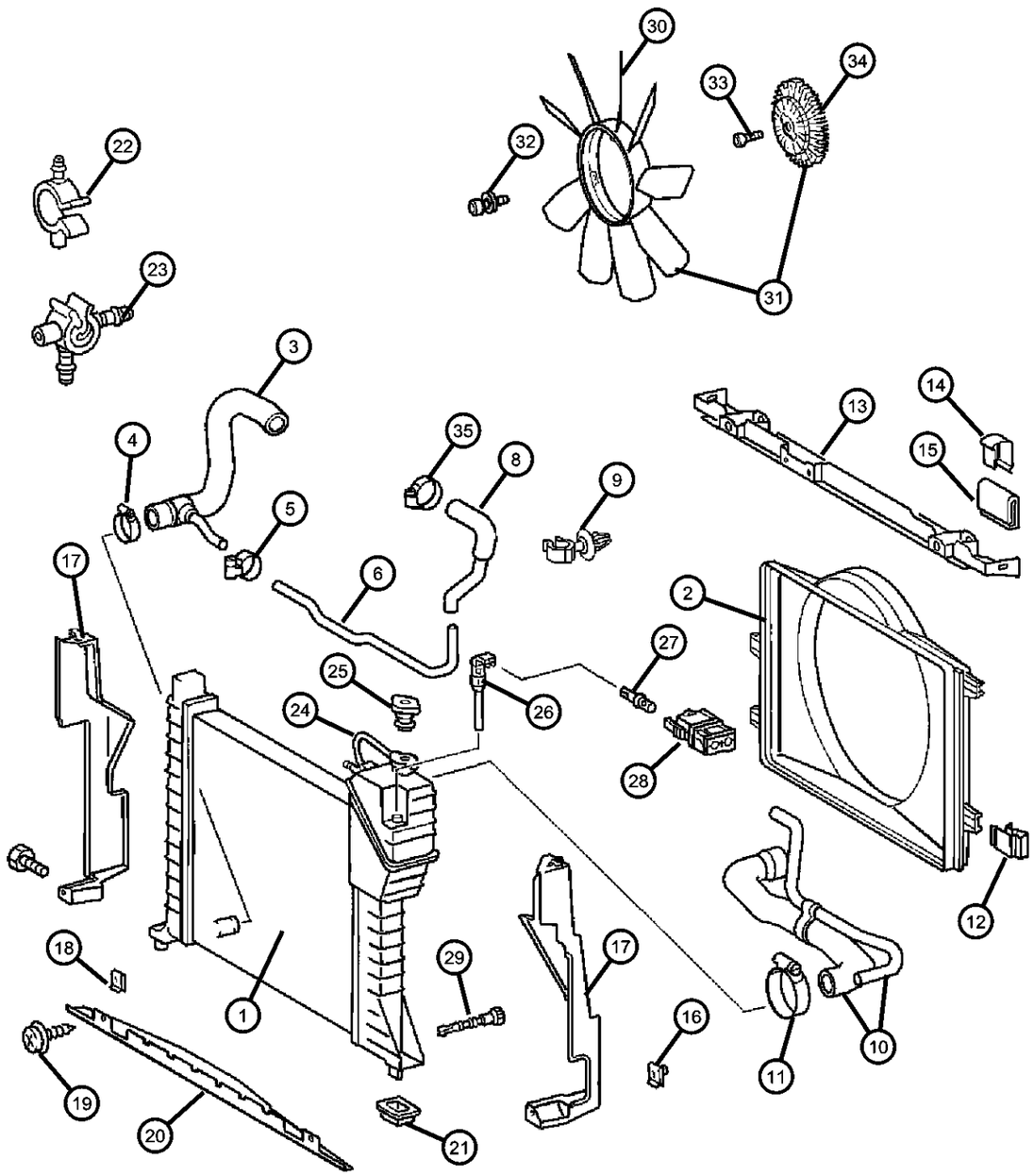

ITEM	PART NUMBER	QTY	LINE	SERIES	BODY	ENGINE	TRANS	TRIM	DESCRIPTION
1	05104117AA	1				EX8, EX9	DGJ		RADIATOR
	05066386AA								Mopar Coolant 5 Year/100,000 Mile Formula 1 Gallon
2									SHROUD, Fan
	05104130AA	1	2, 6						
		1	3, 7						
3									HOSE, Radiator Outlet
	05103581AA	1	2, 6			EX8			
		1	3, 7			EX8			
4									CLAMP, Hose
	06104785AA	2	2, 6						
		2	3, 7						
5									CLAMP, HOSE CLAMP
	06104779AA	3	2, 6						
		3	3, 7						
6	05104118AA	1	2, 6						PIPE
-7									HOSE, Coolant
	05135342AA	1	2, 6			EX8			
		1	3, 7			EX8			
8									HOSE, Radiator
	05103580AA	1	2, 6						
		1	3, 7						
9									CLIP, Cable
	05125879AA	4	2, 6						
		4	3, 7						
10									HOSE, Radiator Inlet
	05103582AA	1	2, 6						
		1	3, 7						
11									CLAMP, Hose

SPRINTER (VA)

SERIES	LINE	BODY	ENGINE	TRANSMISSION
L = LOWLINE	3 = HD DODGE 2WD 6 = Lt. Duty DODGE 4WD 2 = Med. Duty DODGE 2WD 7 = Med. Duty DODGE 4WD	55 = Wagon 140" 54 = Wagon 118" 52 = Wagon 140" 51 = Wagon 118" 12 = Van 140" 11 = Van 118" 06 = Front Section 158" 14 = Van 118" 15 = Van 140" 16 = Van 158" 56 = Wagon 158" 01 = Chassis Forward Control 118" 02 = Chassis Forward Control 140"	EX8 = Engine-2.7L I5 Mercedes Turbo Diesel	DGJ = Transmission-5-Spd. Automatic,W5A580

AR = use ase required - = Non illustrrated part

Radiator And Related parts
Figure 7-110

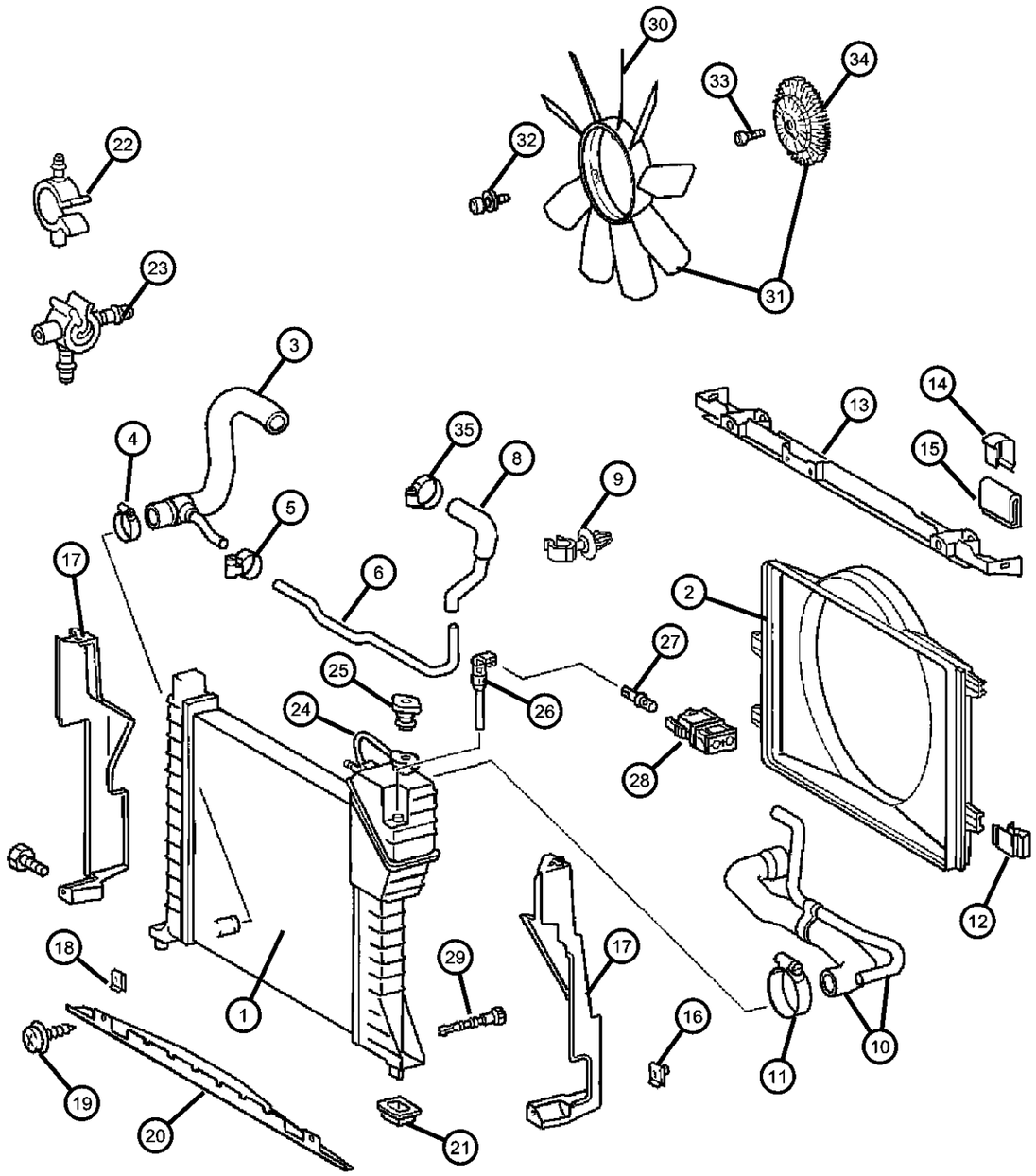

ITEM	PART NUMBER	QTY	LINE	SERIES	BODY	ENGINE	TRANS	TRIM	DESCRIPTION
	06104784AA	2	2, 6						
		2	3, 7						
12									CLIP, Fan Shroud
	05099355AA	4	2, 6						
		4	3, 7						
13									COVER, Radiator
	05104125AA	1	2, 6						
		1	3, 7						
14									CLAMP, "RADIATOR MOUNTING, TOP ", SPRINTER
	05104122AA	2	2, 6						
		2	3, 7						
15									ISOLATOR, Radiator
	05104123AA	2	2, 6						
		2	3, 7						
16									NUT RETAINER, NONE, SPRINTER
	05103733AA	3	2, 6				DGJ		
		3	3, 7				DGJ		
17									SHIELD, Side, Radiator Cooling
	05104127AA	1	2, 6						Left
		1	3, 7						Left
	05104128AA	1	2, 6						Right
		1	3, 7						Right
18									CLIP
	05133497AA	2	2, 6						
		2	3, 7						
19									SCREW, Tapping
	06104574AA	2	6, 2						

SPRINTER (VA)

SERIES	LINE	BODY	ENGINE	TRANSMISSION
L = LOWLINE	3 = HD DODGE 2WD 6 = Lt. Duty DODGE 4WD 2 = Med. Duty DODGE 2WD 7 = Med. Duty DODGE 4WD	55 = Wagon 140" 54 = Wagon 118" 52 = Wagon 140" 51 = Wagon 118" 12 = Van 140" 11 = Van 118" 06 = Front Section 158" 14 = Van 118" 15 = Van 140" 16 = Van 158" 56 = Wagon 158" 01 = Chassis Forward Control 118" 02 = Chassis Forward Control 140"	EX8 = Engine-2.7L I5 Mercedes Turbo Diesel	DGJ = Transmission-5-Spd. Automatic,W5A580

Radiator And Related parts
Figure 7-110

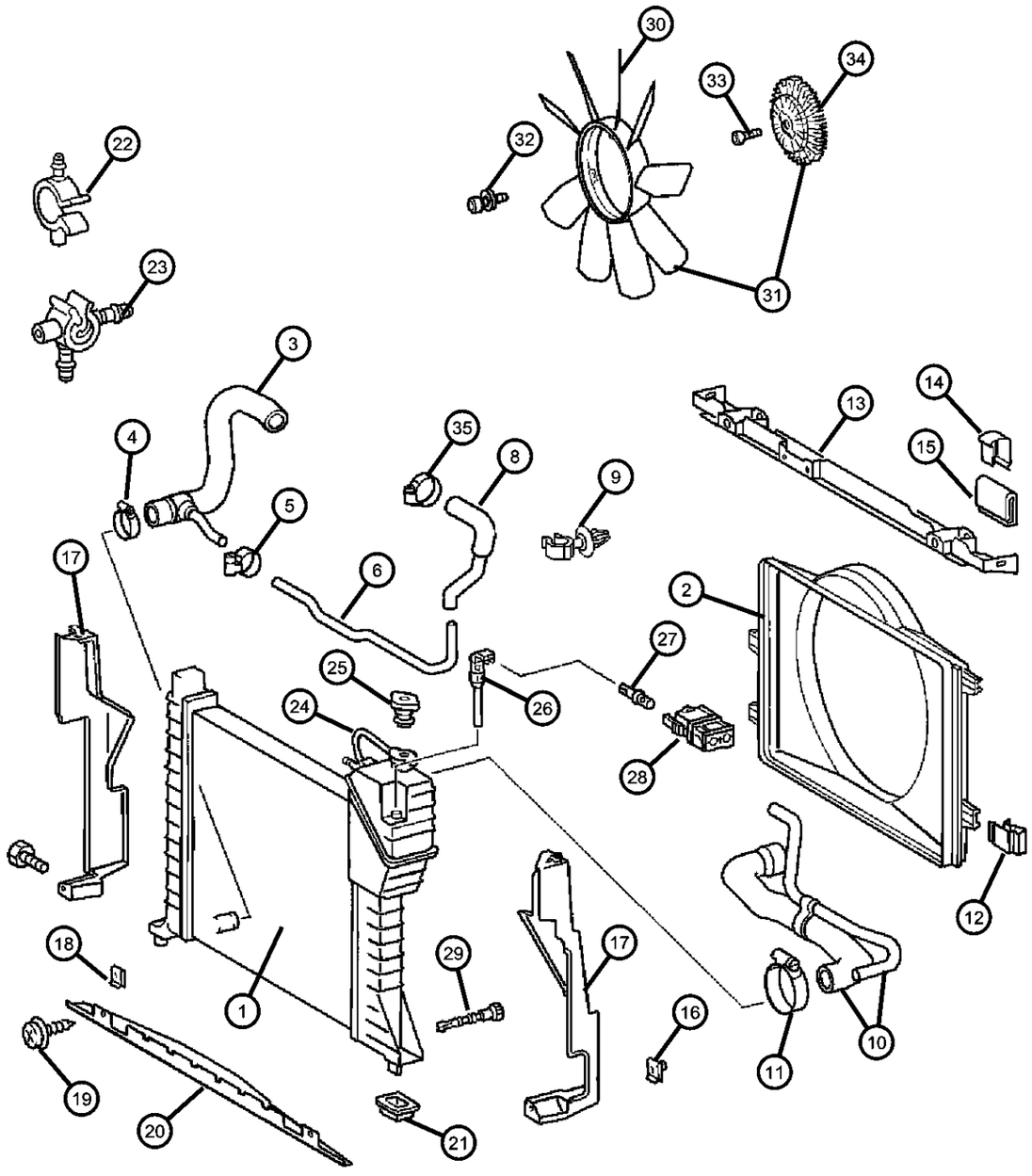

ITEM	PART NUMBER	QTY	LINE	SERIES	BODY	ENGINE	TRANS	TRIM	DESCRIPTION
		2	3, 7						
20									SHIELD, Radiator
	05104129AA	1	2, 6						
		1	3, 7						
21									ISOLATOR, Radiator
	05104021AA	2	2, 6						
		2	3, 7						
22		2							CLIP, (NOT SERVICED)
23									CLIP, Retaining
	06104924AA	1	2, 6						
		1	3, 7						
24									HOSE
	05133493AA	900	2, 6						5 Meters Long
		900	3, 7						5 Meters Long
25									CAP, Radiator
	05103533AA	1	2, 6						
		1	3, 7						
26									SENSOR, Coolant Level
	05120509AA	1	2, 6						
		1	3, 7						
27									TERMINAL
	05120519AA	1	2, 6						
		2	3, 7						
28									CONNECTOR
	05120691AA	1	2, 6						
		1	3, 7						
29									DRAINCOCK, Radiator
	05098834AA	1	2, 6						

SPRINTER (VA)

SERIES	LINE	BODY	ENGINE	TRANSMISSION
L = LOWLINE	3 = HD DODGE 2WD 6 = Lt. Duty DODGE 4WD 2 = Med. Duty DODGE 2WD 7 = Med. Duty DODGE 4WD	55 = Wagon 140" 54 = Wagon 118" 52 = Wagon 140" 51 = Wagon 118" 12 = Van 140" 11 = Van 118" 06 = Front Section 158" 14 = Van 118" 15 = Van 140" 16 = Van 158" 56 = Wagon 158" 01 = Chassis Forward Control 118" 02 = Chassis Forward Control 140"	EX8 = Engine-2.7L I5 Mercedes Turbo Diesel	DGJ = Transmission-5-Spd. Automatic,W5A580

Radiator And Related parts
Figure 7-110

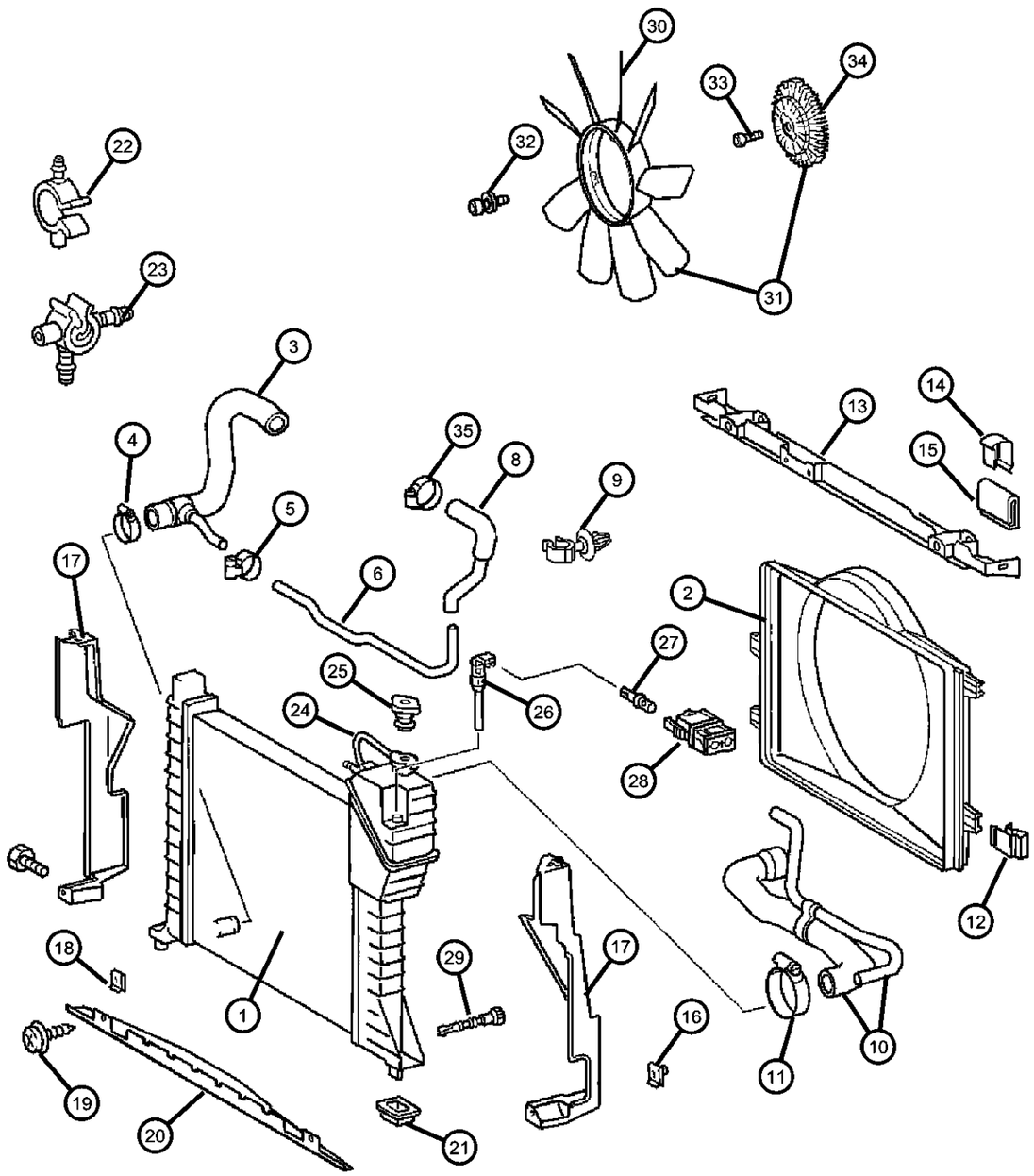

ITEM	PART NUMBER	QTY	LINE	SERIES	BODY	ENGINE	TRANS	TRIM	DESCRIPTION
		1	3, 7						
30									FAN, Cooling
	05136052AA	1	2, 6			EX8, EX9			
		1	3, 7			EX8, EX9			
31									FAN, Cooling
	05117642AA	1	2, 6			EX8, EX9			Complete Fan And Clutch Assembly
		1	3, 7			EX8, EX9			Complete Fan And Clutch Assembly
32		1							SCREW, (NOT SERVICED),
33									SCREW, Hitch Ball
	05104618AA	1	2, 6			EX8, EX9			
		1	3, 7			EX8, EX9			
34									DRIVE, Fan
	05103623AA	1	2, 6			EX9			
		1	3, 7			EX9			
35									CLAMP
	05133494AA	1	2, 6						
		1	3, 7						

SPRINTER (VA)

SERIES	LINE	BODY	ENGINE	TRANSMISSION
L = LOWLINE	3 = HD DODGE 2WD 6 = Lt. Duty DODGE 4WD 2 = Med. Duty DODGE 2WD 7 = Med. Duty DODGE 4WD	55 = Wagon 140" 54 = Wagon 118" 52 = Wagon 140" 51 = Wagon 118" 12 = Van 140" 11 = Van 118" 06 = Front Section 158" 14 = Van 118" 15 = Van 140" 16 = Van 158" 56 = Wagon 158" 01 = Chassis Forward Control 118" 02 = Chassis Forward Control 140"	EX8 = Engine-2.7L I5 Mercedes Turbo Diesel	DGJ = Transmission-5-Spd. Automatic,W5A580

Charge Air Intercooler
Figure 7-120

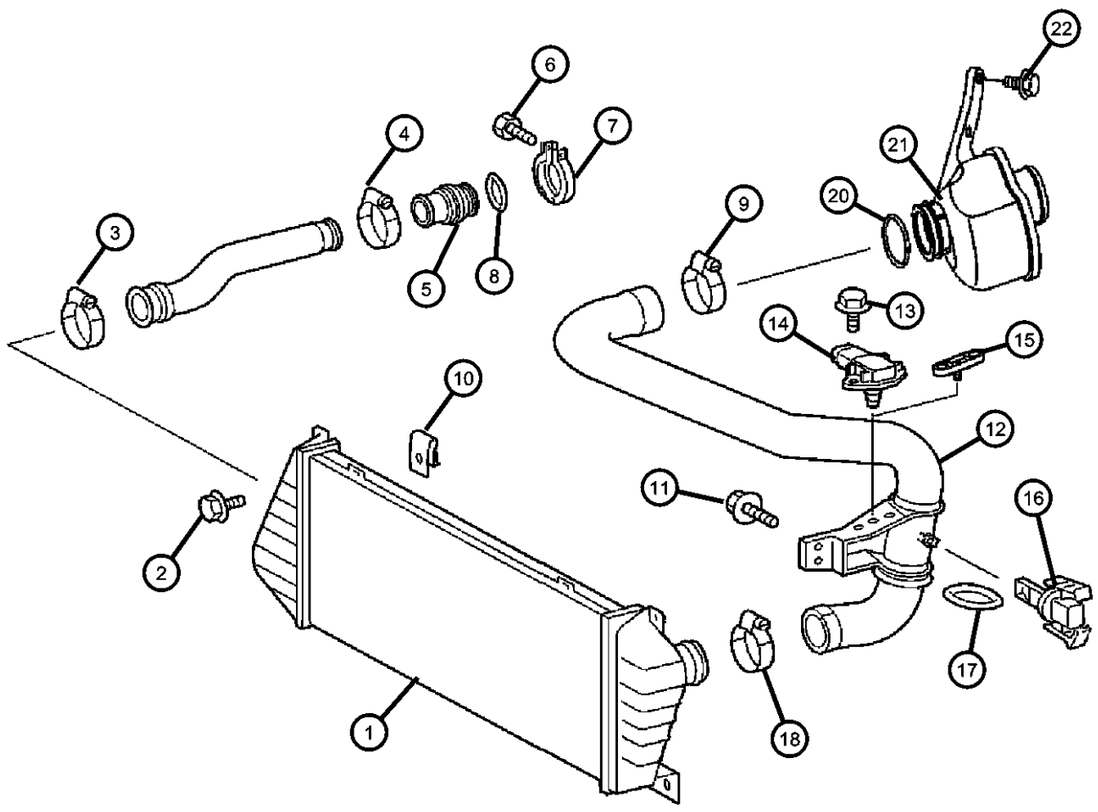

ITEM	PART NUMBER	QTY	LINE	SERIES	BODY	ENGINE	TRANS	TRIM	DESCRIPTION
NOTE:									
Sales Codes:									
[EX8]=2.7L I-5 Turbo Diesel Engine									
[EX9]=2.7L I-5 Mercedes-Benz Turbo Diesel Engine									
[NAA]=Federal Emissions									
1									COOLER, Charge Air
	05119997AA	1	2, 6			EX8			
		1	3, 7			EX8			
2									SCREW
	05133476AA	4	2, 6						
		4	3, 7						
3									CLAMP
	05104602AA	1	2, 6			EX8, EX9			
		1	3, 7			EX8, EX9			
4									CLAMP, Hose
	05104601AA	2	2, 6						
		2	3, 7						
5									PIPE
	05104139AA	1	2, 6			EX9			
		1	3, 7			EX9			
6	05096986AA	1	2, 6			EX9			SCREW
7									CLAMP, Mounting
	05126043AA	1	2, 6			EX9			
		1	3, 7			EX9			
8									O RING
	05080311AA	1	2, 6			EX9			
		1	3, 7			EX9			
9									CLAMP
	05104602AA	1	2, 6			EX8, EX9			
		1	3, 7			EX8, EX9			

SPRINTER (VA)

SERIES	LINE	BODY	ENGINE	TRANSMISSION
L = LOWLINE	3 = HD DODGE 2WD 6 = Lt. Duty DODGE 4WD 2 = Med. Duty DODGE 2WD 7 = Med. Duty DODGE 4WD	55 = Wagon 140" 54 = Wagon 118" 52 = Wagon 140" 51 = Wagon 118" 12 = Van 140" 11 = Van 118" 06 = Front Section 158" 14 = Van 118" 15 = Van 140" 16 = Van 158" 56 = Wagon 158" 01 = Chassis Forward Control 118" 02 = Chassis Forward Control 140"	EX8 = Engine-2.7L I5 Mercedes Turbo Diesel	DGJ = Transmission-5-Spd. Automatic,W5A580

Charge Air Intercooler
Figure 7-120

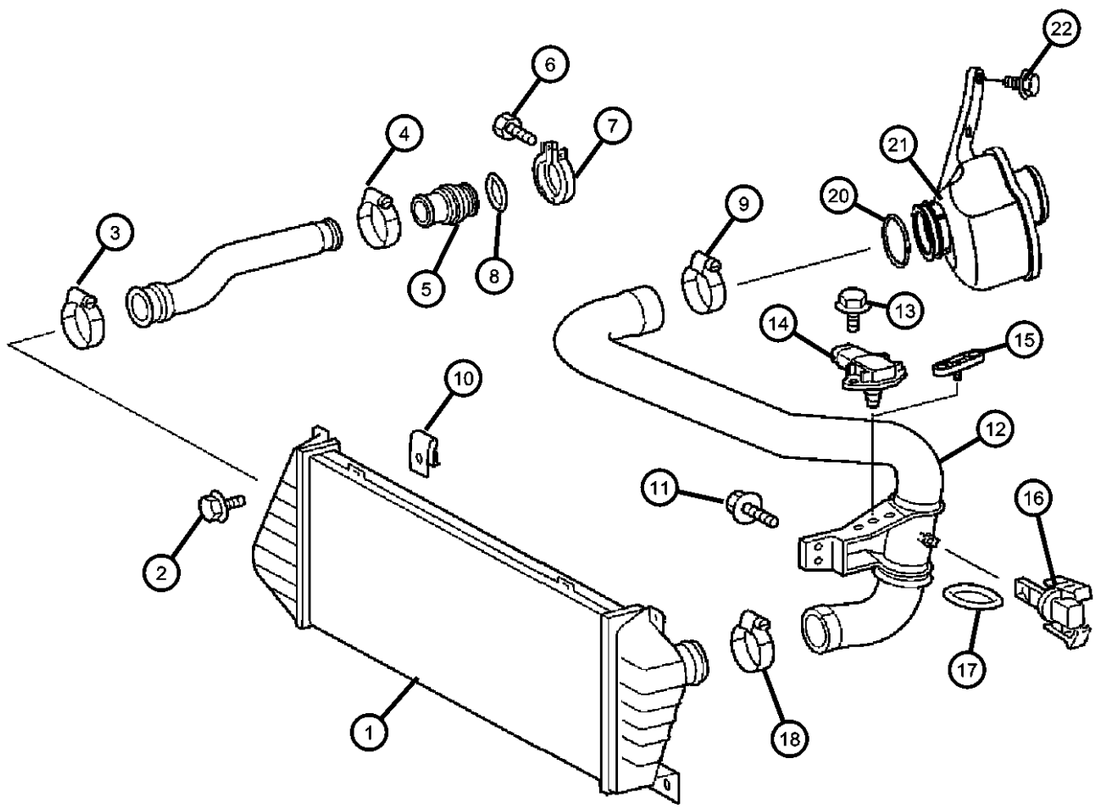

ITEM	PART NUMBER	QTY	LINE	SERIES	BODY	ENGINE	TRANS	TRIM	DESCRIPTION
10									U-NUT
	05125863AA	4	3, 7						
		4	2, 6						
11									SCREW
	05104610AA	2	2, 6						
		2	3, 7						
12									HOSE, Radiator
	05104141AA	1	2, 6			EX8, EX9			
		1	3, 7			EX8, EX9			
	05120147AA	1	2, 6			EX8, EX9			[NAA]
		1	3, 7			EX8, EX9			[NAA]
13									SCREW
	06104172AA	2	2, 6			EX9			
		2	3, 7			EX9			
14									SENSOR, MAP
	05117545AA	1	2, 6			EX8			
		1	3, 7			EX8			
15		1							SPACER, (NOT SERVICED)
16	05174042AA	1				EX8			SENSOR, Temperature, AIR INTAKE TEMP. SENSOR
17	05103906AA	1	3, 7						O RING
18									CLAMP
	05104602AA	1	2, 6			EX8, EX9			
		1	3, 7			EX8, EX9			
-19									HOSE, Air Induction
	05120148AA	1	2, 6			EX8, EX9			
		1	3, 7			EX8, EX9			
20	05139047AA	1				EX8			O RING

SPRINTER (VA)

SERIES	LINE	BODY	ENGINE	TRANSMISSION
L = LOWLINE	3 = HD DODGE 2WD 6 = Lt. Duty DODGE 4WD 2 = Med. Duty DODGE 2WD 7 = Med. Duty DODGE 4WD	55 = Wagon 140" 54 = Wagon 118" 52 = Wagon 140" 51 = Wagon 118" 12 = Van 140" 11 = Van 118" 06 = Front Section 158" 14 = Van 118" 15 = Van 140" 16 = Van 158" 56 = Wagon 158" 01 = Chassis Forward Control 118" 02 = Chassis Forward Control 140"	EX8 = Engine-2.7L I5 Mercedes Turbo Diesel	DGJ = Transmission-5-Spd. Automatic,W5A580

Charge Air Intercooler
Figure 7-120

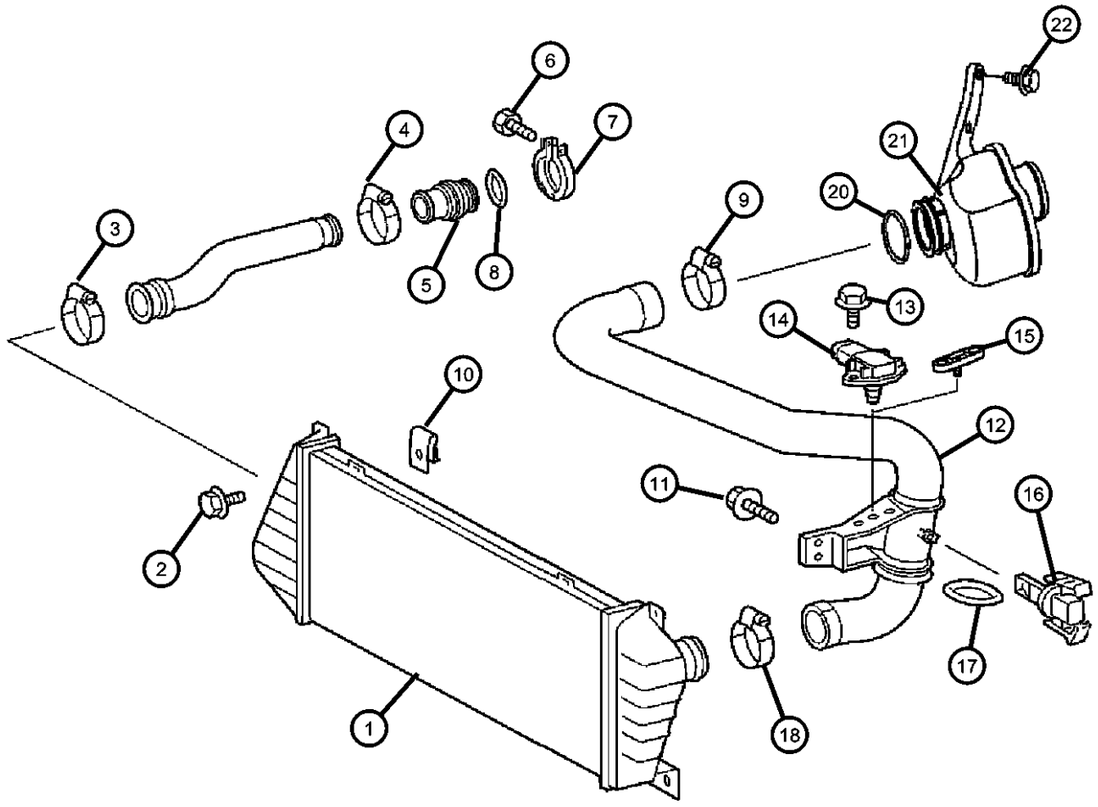

ITEM	PART NUMBER	QTY	LINE	SERIES	BODY	ENGINE	TRANS	TRIM	DESCRIPTION
21	05137154AA	1							RESONATOR, Turbo
22	06104077AA	2				EX8			SCREW

SPRINTER (VA)

SERIES	LINE	BODY	ENGINE	TRANSMISSION
L = LOWLINE	3 = HD DODGE 2WD 6 = Lt. Duty DODGE 4WD 2 = Med. Duty DODGE 2WD 7 = Med. Duty DODGE 4WD	55 = Wagon 140" 54 = Wagon 118" 52 = Wagon 140" 51 = Wagon 118" 12 = Van 140" 11 = Van 118" 06 = Front Section 158" 14 = Van 118" 15 = Van 140" 16 = Van 158" 56 = Wagon 158" 01 = Chassis Forward Control 118" 02 = Chassis Forward Control 140"	EX8 = Engine-2.7L I5 Mercedes Turbo Diesel	DGJ = Transmission-5-Spd. Automatic,W5A580

Water Pump And Related Parts
Figure 7-210

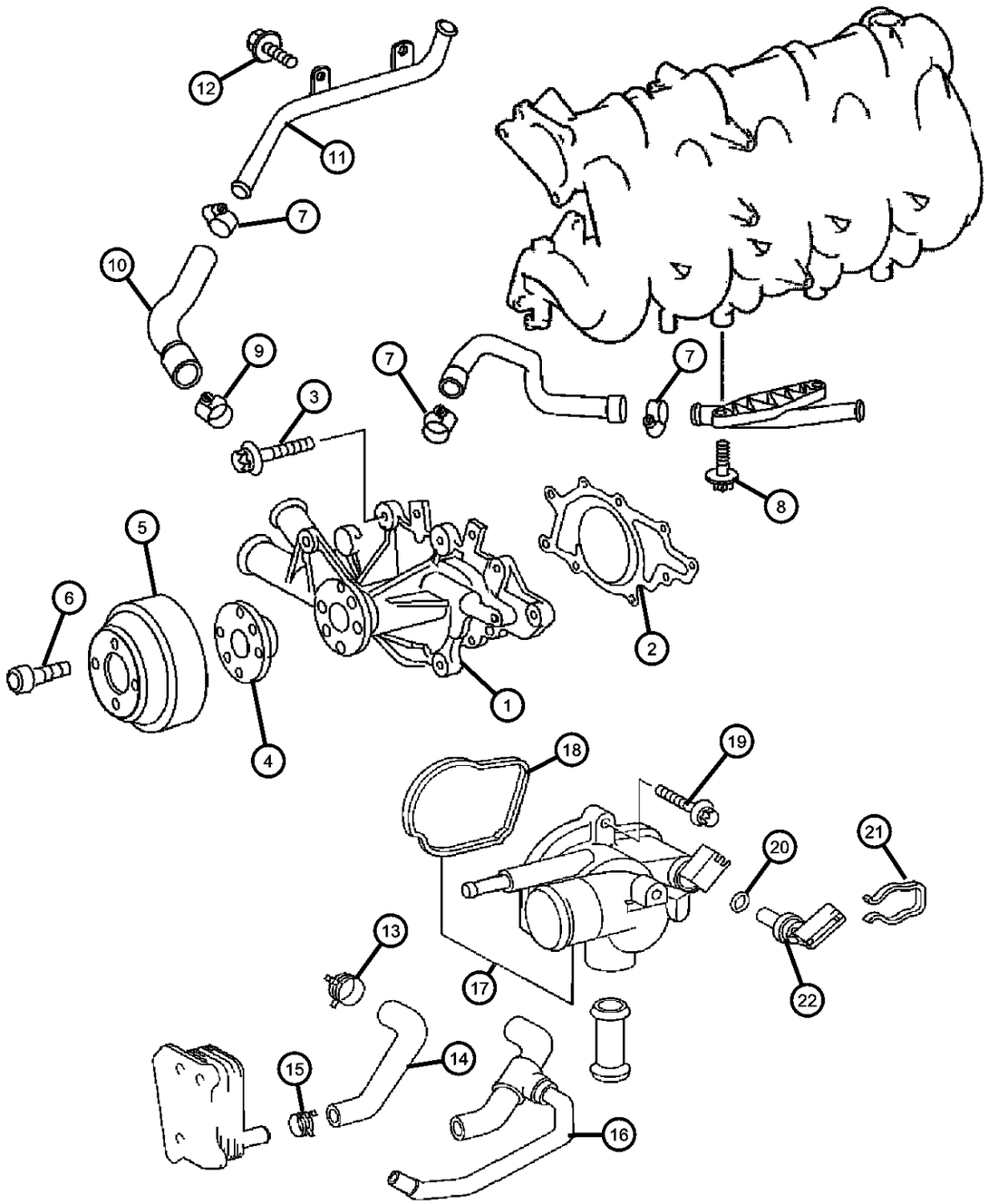

ITEM	PART NUMBER	QTY	LINE	SERIES	BODY	ENGINE	TRANS	TRIM	DESCRIPTION
1	05138057AA	1							PUMP, Water
2									GASKET, Water Pump
	05080144AA	1				EX9			
		1				EX8			
3									SCREW
	06104682AA	3				EX8			
		3				EX9			
4		3							FLANGE, Water Pump Drive, 05117648aa, (NOT SERVICED)
5	05136764AA	1				EX8			PULLEY, Water Pump
6									SCREW
	06104140AA	4				EX9			
		4				EX8			
7									CLAMP, Hose
	06104781AA	1				EX9			
		1				EX8			
8									SCREW
	06104026AA	1	2, 6			EX9			
		1	3, 7			EX9			
9									CLAMP
	05133494AA	1	2, 6						
		1	3, 7						
10									TUBE, Heater Return
	05103985AA	1				EX9			
		1				EX8			
11									TUBE, Heater Return
	05117644AA	1				EX9			
		1				EX8			
12									SCREW

SPRINTER (VA)

SERIES	LINE	BODY	ENGINE	TRANSMISSION
L = LOWLINE	3 = HD DODGE 2WD 6 = Lt. Duty DODGE 4WD 2 = Med. Duty DODGE 2WD 7 = Med. Duty DODGE 4WD	55 = Wagon 140" 54 = Wagon 118" 52 = Wagon 140" 51 = Wagon 118" 12 = Van 140" 11 = Van 118" 06 = Front Section 158" 14 = Van 118" 15 = Van 140" 16 = Van 158" 56 = Wagon 158" 01 = Chassis Forward Control 118" 02 = Chassis Forward Control 140"	EX8 = Engine-2.7L I5 Mercedes Turbo Diesel	DGJ = Transmission-5-Spd. Automatic,W5A580

Water Pump And Related Parts
Figure 7-210

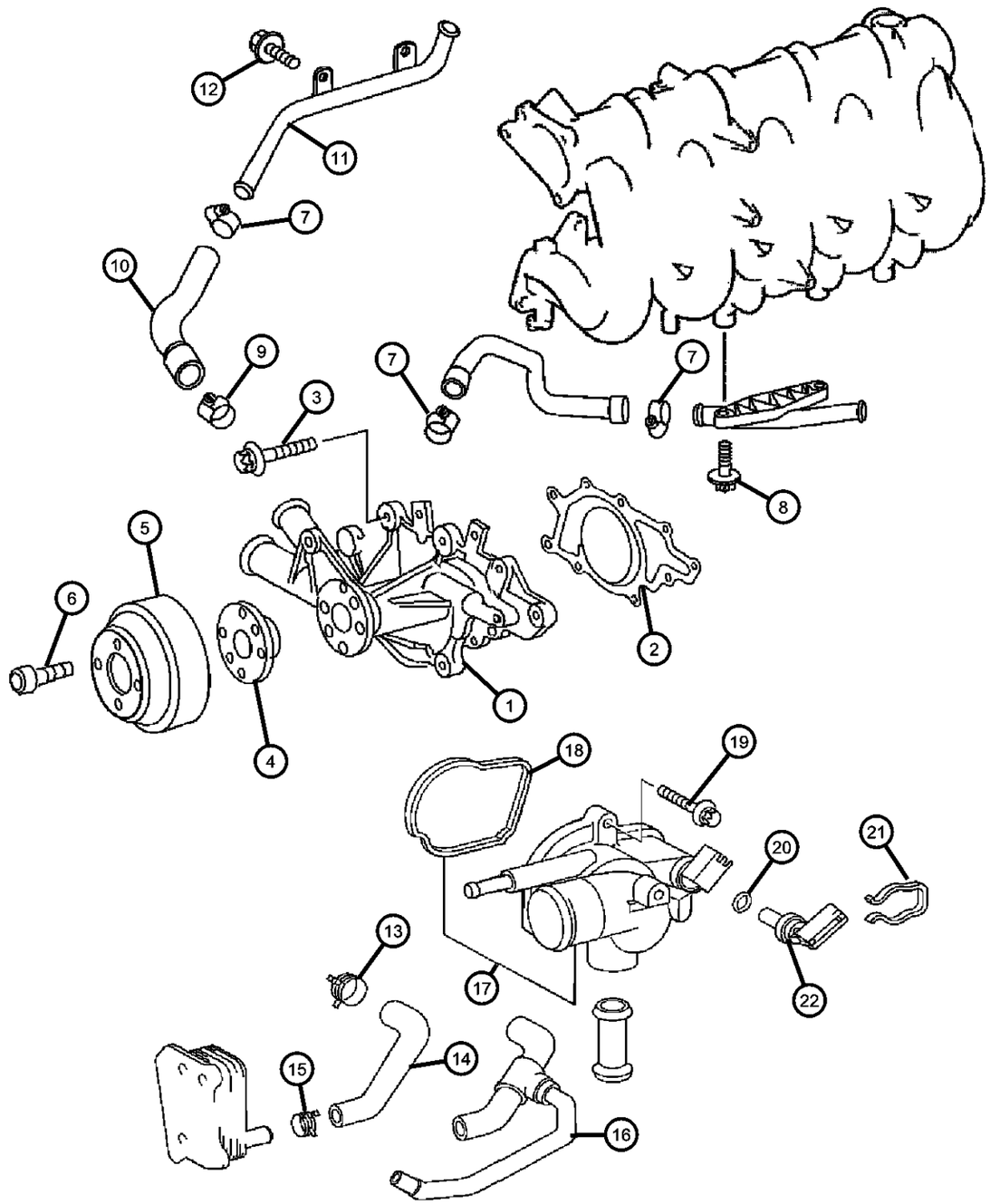

ITEM	PART NUMBER	QTY	LINE	SERIES	BODY	ENGINE	TRANS	TRIM	DESCRIPTION
	06104005AA	2				EX8			
		2				EX9			
13	05080153AA	1							CLAMP, Hose
14									HOSE
	05103986AA	1				EX9			
		1				EX8			
15									CLAMP
	05133496AA	1	2, 6						
		1	3, 7						
16									HOSE, Oil Cooler
	05080151AA	1				EX9			
		1				EX8			
17	05080146AB	1							THERMOSTAT
18									GASKET, Thermostat
	05080150AA	1				EX9			
		1				EX8			
19	06104144AA	2	2, 6						SCREW
20									O RING
	05080148AA	1				EX9			
		1				EX8			
21									CLIP
	05080149AA	1				EX9			
		1				EX8			
22									SENDING UNIT, Temperature Gauge
	05080147AA	1				EX9			
		1				EX8			
-23									HOSE, Water Pump

SPRINTER (VA)

SERIES	LINE	BODY	ENGINE	TRANSMISSION
L = LOWLINE	3 = HD DODGE 2WD 6 = Lt. Duty DODGE 4WD 2 = Med. Duty DODGE 2WD 7 = Med. Duty DODGE 4WD	55 = Wagon 140" 54 = Wagon 118" 52 = Wagon 140" 51 = Wagon 118" 12 = Van 140" 11 = Van 118" 06 = Front Section 158" 14 = Van 118" 15 = Van 140" 16 = Van 158" 56 = Wagon 158" 01 = Chassis Forward Control 118" 02 = Chassis Forward Control 140"	EX8 = Engine-2.7L I5 Mercedes Turbo Diesel	DGJ = Transmission-5-Spd. Automatic,W5A580

AR = use ase required - = Non illustrrated part

<< RETURN TO GROUP INDEX

Water Pump And Related Parts
Figure 7-210

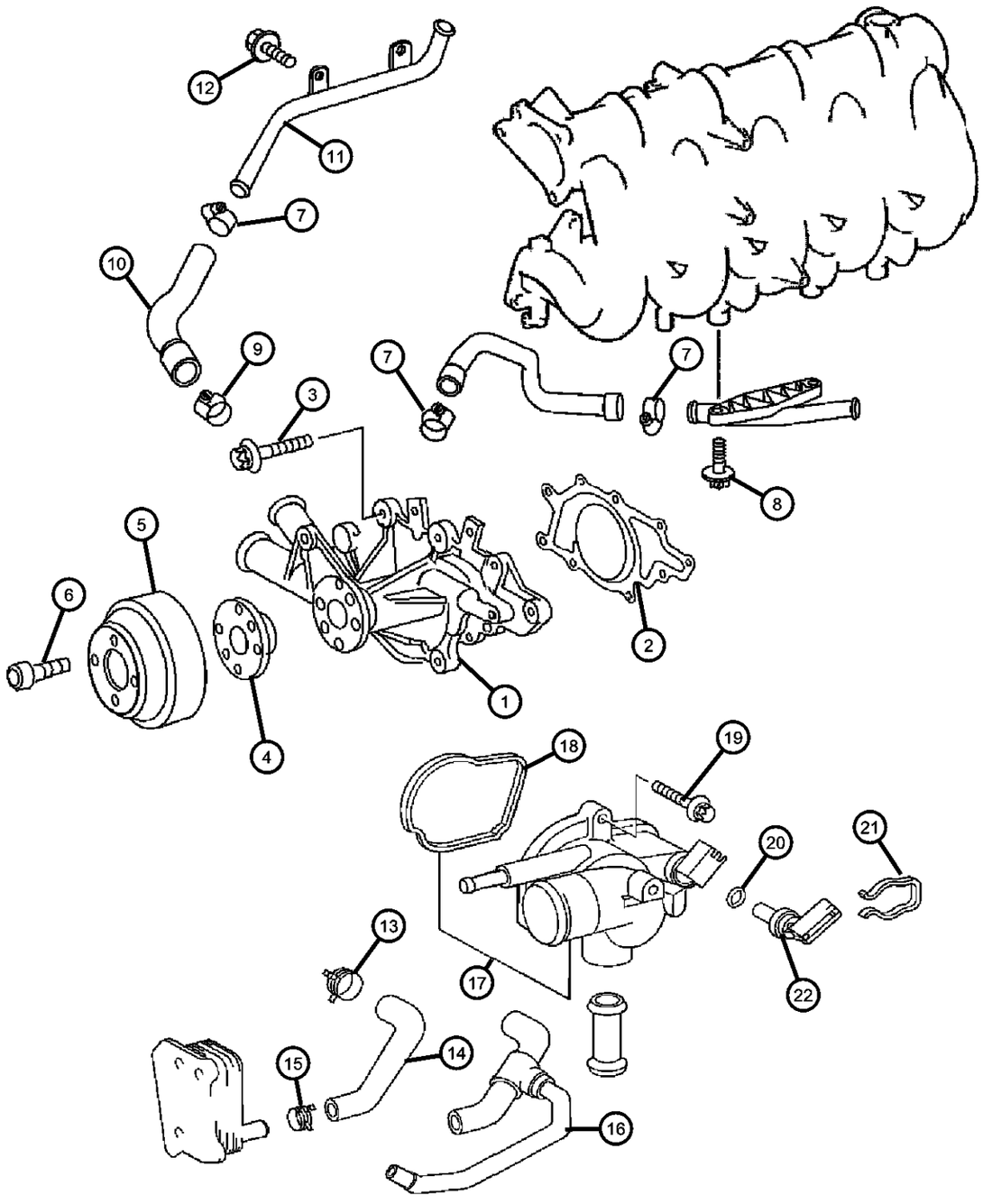

ITEM	PART NUMBER	QTY	LINE	SERIES	BODY	ENGINE	TRANS	TRIM	DESCRIPTION
	05137500AA	1							Tube lower water pump to lower radiator hose
		1				EX8			Tube lower water pump to lower radiator hose
-24									GASKET, Water Pump
	05137502AA	1							Lower hose/tube to water pump
		1				EX8			Lower hose/tube to water pump

SPRINTER (VA)

SERIES	LINE	BODY	ENGINE	TRANSMISSION
L = LOWLINE	3 = HD DODGE 2WD 6 = Lt. Duty DODGE 4WD 2 = Med. Duty DODGE 2WD 7 = Med. Duty DODGE 4WD	55 = Wagon 140" 54 = Wagon 118" 52 = Wagon 140" 51 = Wagon 118" 12 = Van 140" 11 = Van 118" 06 = Front Section 158" 14 = Van 118" 15 = Van 140" 16 = Van 158" 56 = Wagon 158" 01 = Chassis Forward Control 118" 02 = Chassis Forward Control 140"	EX8 = Engine-2.7L I5 Mercedes Turbo Diesel	DGJ = Transmission-5-Spd. Automatic,W5A580

AR = use ase required - = Non illustrrated part

Drive pulleys
Figure 7-410

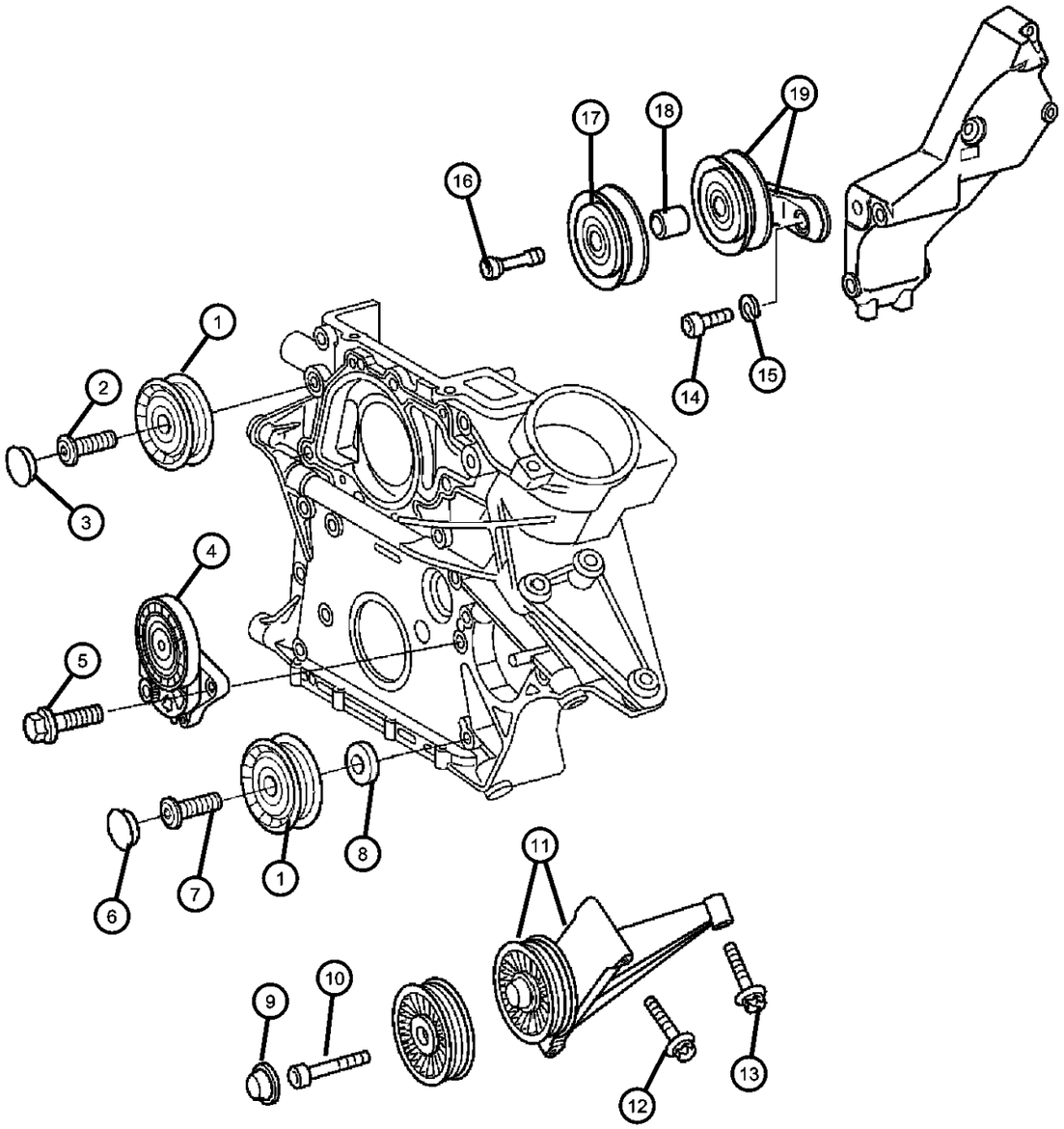

ITEM	PART NUMBER	QTY	LINE	SERIES	BODY	ENGINE	TRANS	TRIM	DESCRIPTION
1									PULLEY, Tensioner
	05080246AA	2							
	05080319AA	1				EX8			Diesel
2									SCREW
	05073902AA	1				EX9			
		1				EX8			
3									CAP, CAP
	05080250AA	1				EX9			
		1				EX8			
4									TENSIONER, Belt
	05080243AA	1				EX9			
		1				EX8			
5									SCREW
	05073896AA	2				EX9			
		2				EX8			
6									CAP, CAP
	05080250AA	1				EX9			
		1				EX8			
7									SCREW
	05073902AA	1				EX9			
		1				EX8			
8									WASHER
	05080248AA	1				EX9			
		1				EX8			
9	05125553AA	1							CAP, Screw Cover
10	05126143AA	1							SCREW
11	05117691AA	1							PULLEY, Tensioner
12									SCREW

SPRINTER (VA)

SERIES	LINE	BODY	ENGINE	TRANSMISSION
L = LOWLINE	3 = HD DODGE 2WD 6 = Lt. Duty DODGE 4WD 2 = Med. Duty DODGE 2WD 7 = Med. Duty DODGE 4WD	55 = Wagon 140" 54 = Wagon 118" 52 = Wagon 140" 51 = Wagon 118" 12 = Van 140" 11 = Van 118" 06 = Front Section 158" 14 = Van 118" 15 = Van 140" 16 = Van 158" 56 = Wagon 158" 01 = Chassis Forward Control 118" 02 = Chassis Forward Control 140"	EX8 = Engine-2.7L I5 Mercedes Turbo Diesel	DGJ = Transmission-5-Spd. Automatic,W5A580

Drive pulleys
Figure 7-410

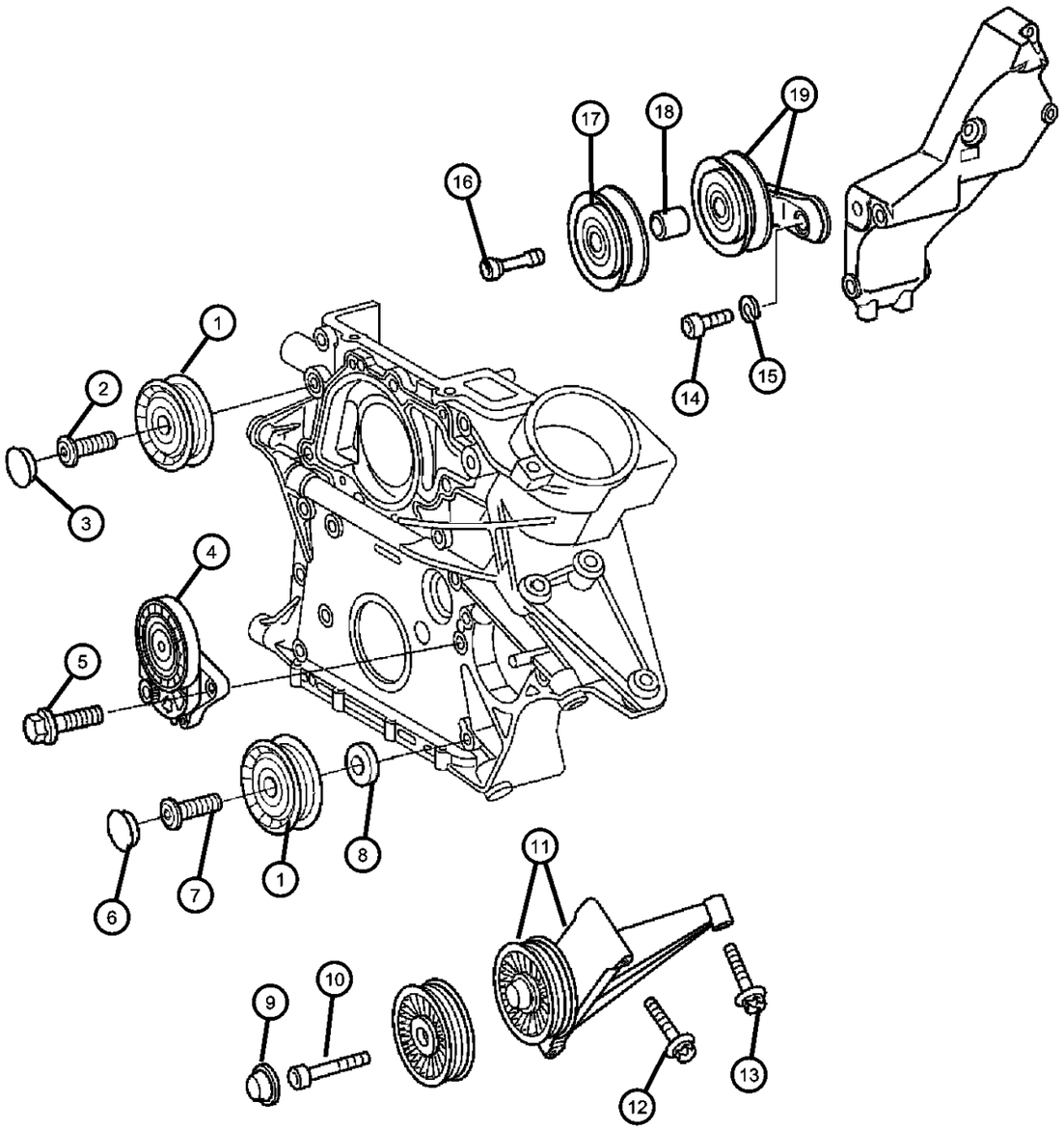

ITEM	PART NUMBER	QTY	LINE	SERIES	BODY	ENGINE	TRANS	TRIM	DESCRIPTION
	06104035AA	1				EX8			
		1				EX9			
13									BOLT, Hex Head
	05133207AA	3	2, 6			EX9			
		1	3, 7			EX8, EX9			
14		1							SCREW, (NOT SERVICED)
15		1							WASHER, (NOT SERVICED)
16	05125736AA	1	3, 7			EX9			SCREW
17									TENSIONER, Belt
	05117510AA	1	2, 6			EX9			
		1	3, 7			EX9			
18									BUSHING, Idler Pulley
	05117516AA	1	2, 6			EX8, EX9			
		1	3, 7			EX8, EX9			
19									TENSIONER, Belt
	05080243AA	1				EX9			
		1				EX8			

SPRINTER (VA)

SERIES	LINE	BODY	ENGINE	TRANSMISSION
L = LOWLINE	3 = HD DODGE 2WD 6 = Lt. Duty DODGE 4WD 2 = Med. Duty DODGE 2WD 7 = Med. Duty DODGE 4WD	55 = Wagon 140" 54 = Wagon 118" 52 = Wagon 140" 51 = Wagon 118" 12 = Van 140" 11 = Van 118" 06 = Front Section 158" 14 = Van 118" 15 = Van 140" 16 = Van 158" 56 = Wagon 158" 01 = Chassis Forward Control 118" 02 = Chassis Forward Control 140"	EX8 = Engine-2.7L I5 Mercedes Turbo Diesel	DGJ = Transmission-5-Spd. Automatic,W5A580

Drive Belts
Figure 7-510

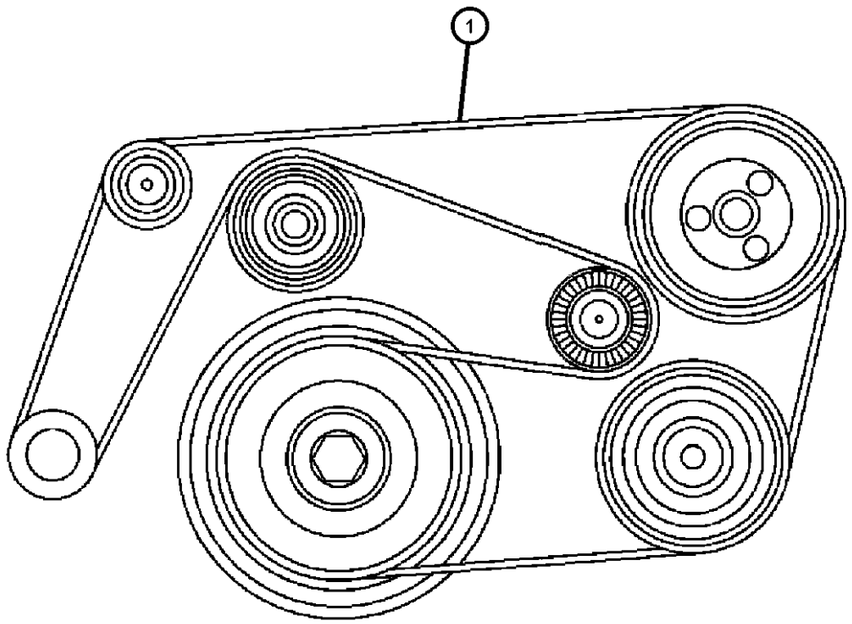

ITEM	PART NUMBER	QTY	LINE	SERIES	BODY	ENGINE	TRANS	TRIM	DESCRIPTION
NOTE:									
Sales Codes:									
[EX8]=2.7L I-5 Turbo Diesel Engine									
[EX9]=2.7L I-5 Mercedes-Benz Turbo Diesel Engine									
[HAB]=Air Conditioning with Auto. Temp.									
[4XS]=National Version for U.S.A.									
[4Z1]=National Version for Canada									
1									BELT, Accessory Drive
	05103564AA	1	2, 6			EX8			With [HAB] / Size [21.36X2271]
		1	3, 7			EX8			With [HAB] / Size [21.36X2271]
	05103565AA	1				EX9			Without [HAB] / Size [21.36X2265]
	05127258AA	1				EX8			With [HAB] Size [21.36X2260]
	05132825AA	1	2, 3, 6, 7			EX8	DGZ		Without [HAB]
-2									BELT, V-Belt
	05125848AA	1	2, 6			EX8, EX9			With [HBD + HAB]
	05143724AA	1							

SPRINTER (VA)

SERIES	LINE	BODY	ENGINE	TRANSMISSION
L = LOWLINE	3 = HD DODGE 2WD 6 = Lt. Duty DODGE 4WD 2 = Med. Duty DODGE 2WD 7 = Med. Duty DODGE 4WD	55 = Wagon 140" 54 = Wagon 118" 52 = Wagon 140" 51 = Wagon 118" 12 = Van 140" 11 = Van 118" 06 = Front Section 158" 14 = Van 118" 15 = Van 140" 16 = Van 158" 56 = Wagon 158" 01 = Chassis Forward Control 118" 02 = Chassis Forward Control 140"	EX8 = Engine-2.7L I5 Mercedes Turbo Diesel	DGJ = Transmission-5-Spd. Automatic,W5A580

Oil Cooler Lines
Figure 7-610

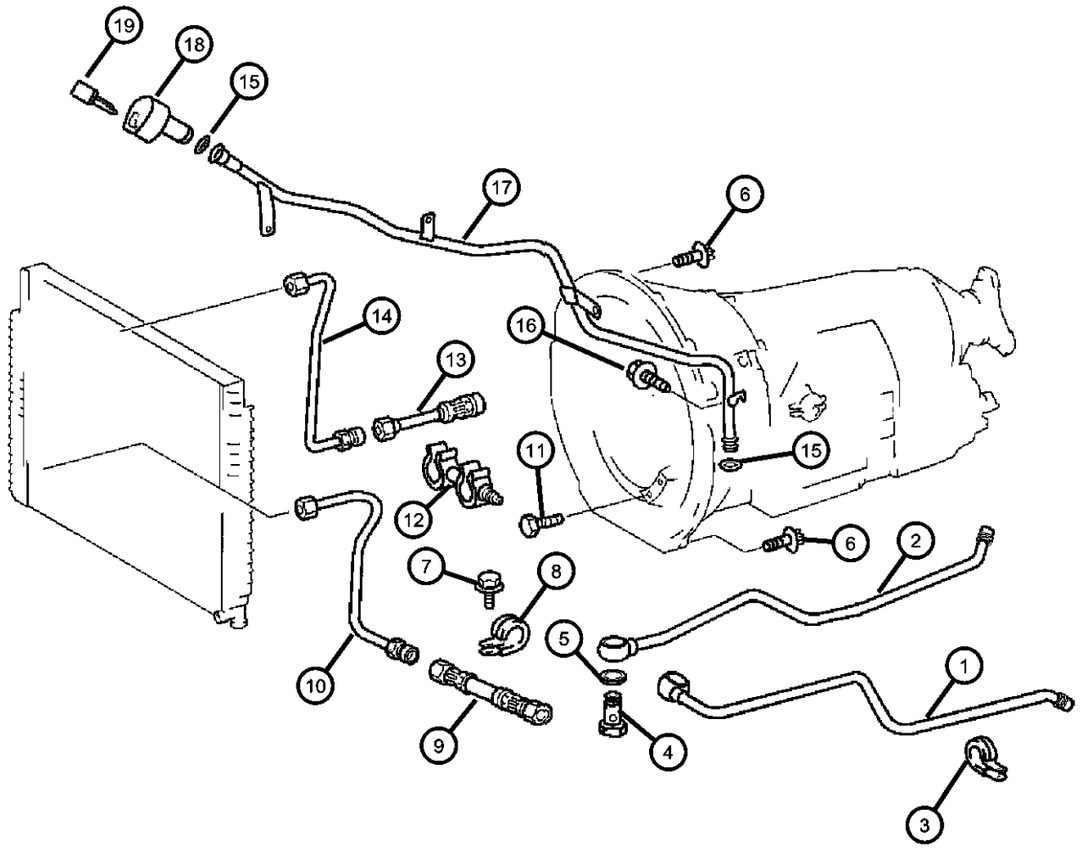

ITEM	PART NUMBER	QTY	LINE	SERIES	BODY	ENGINE	TRANS	TRIM	DESCRIPTION
1									TUBE, Oil Feed
	05117855AA	1	2, 6				DGJ		
		1	3, 7				DGJ		
2									LINE, Transmission Oil Cooler Pressure
	05117857AA	1	2, 6				DGJ		
		1	3, 7				DGJ		
3									CLAMP, CLAMP
	05097689AA	1	2, 6						
		1	3, 7						
4									BOLT, Banjo
	06507437AA	2	2, 6				DGJ		
		2	3, 7				DGJ		
5									WASHER, Banjo
	06507454AA	4	2, 6				DGJ		
		4	3, 7				DGJ		
6									SCREW
	06104047AA	2	2, 6				DGJ		
		2	3, 7				DGJ		
7									SCREW
	05073824AA	1	2, 6				DGJ		
		1	3, 7				DGJ		
8									CLAMP, Oil Cooler Line
	05096952AA	1	2, 6				DGJ		
		1	3, 7				DGJ		
9									LINE, Transmission Oil Cooler Pressure
	05117856AA	1	2, 6				DGJ		
		1	3, 7				DGJ		
10									LINE, Oil Cooler Supply

SPRINTER (VA)

SERIES	LINE	BODY	ENGINE	TRANSMISSION
L = LOWLINE	3 = HD DODGE 2WD 6 = Lt. Duty DODGE 4WD 2 = Med. Duty DODGE 2WD 7 = Med. Duty DODGE 4WD	55 = Wagon 140" 54 = Wagon 118" 52 = Wagon 140" 51 = Wagon 118" 12 = Van 140" 11 = Van 118" 06 = Front Section 158" 14 = Van 118" 15 = Van 140" 16 = Van 158" 56 = Wagon 158" 01 = Chassis Forward Control 118" 02 = Chassis Forward Control 140"	EX8 = Engine-2.7L I5 Mercedes Turbo Diesel	DGJ = Transmission-5-Spd. Automatic,W5A580

Oil Cooler Lines
Figure 7-610

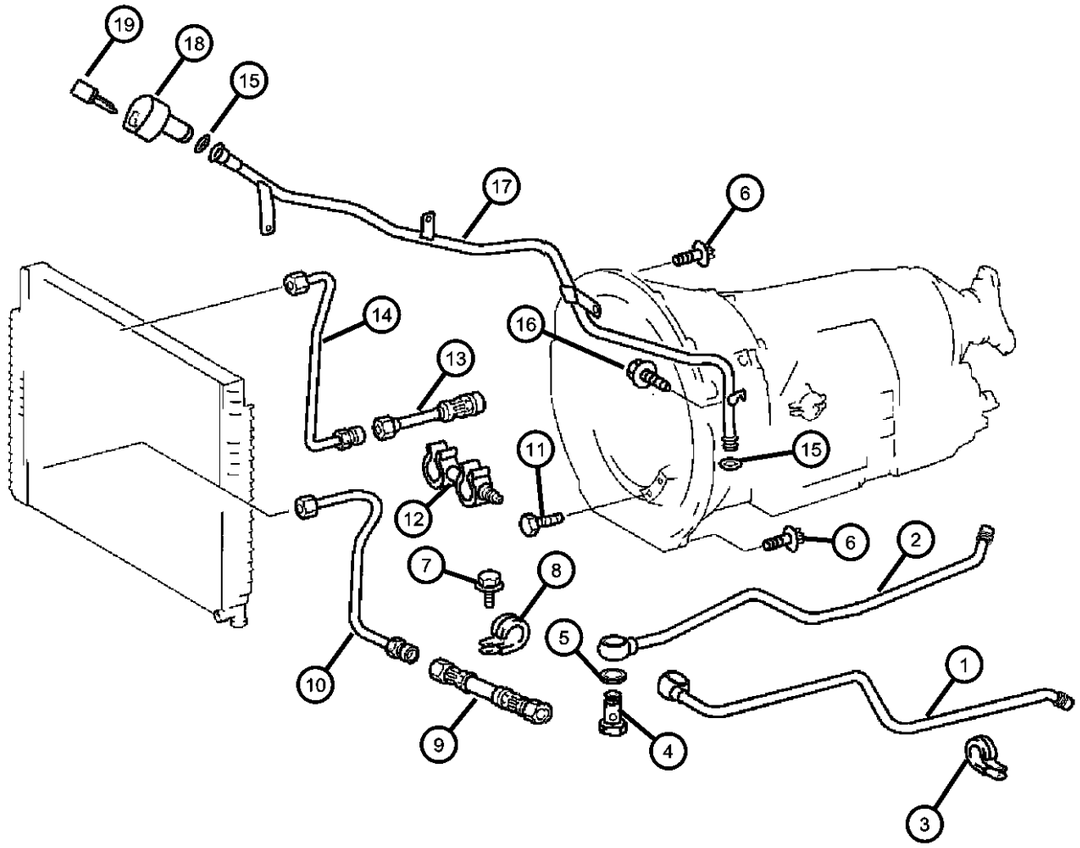

ITEM	PART NUMBER	QTY	LINE	SERIES	BODY	ENGINE	TRANS	TRIM	DESCRIPTION
	05119991AA	1	2, 6				DGJ		
		1	3, 7				DGJ		
11									SCREW
	06507095AA	6	2, 6				DGJ		
		6	3, 7				DGJ		
12									BRACKET, Transmission Oil Cooler
	05125878AA	2	2, 6				DGJ		
		2	3, 7				DGJ		
13									TUBE AND HOSE, Oil Cooler
	05127830AB	1	2, 6				DGJ		
		1	3, 7				DGJ		
14									LINE, Oil Cooler Return
	05119993AA	1	2, 6				DGJ		
		1	3, 7				DGJ		
15									SEAL, Oil Filler Tube
	05101154AA	1	2, 6				DGJ		
		1	3, 7				DGJ		
16									SCREW
	05125738AA	1	2, 6				DGJ		
		1	3, 7				DGJ		
17									TUBE, Transmission Oil Filler
	05117847AA	1	2, 6				DGJ		
		1	3, 7				DGJ		
18									CAP, Oil Filler
	53013549AA	1	2, 6				DGJ		
		1	3, 7				DGJ		
19									PIN

SPRINTER (VA)

SERIES	LINE	BODY	ENGINE	TRANSMISSION
L = LOWLINE	3 = HD DODGE 2WD 6 = Lt. Duty DODGE 4WD 2 = Med. Duty DODGE 2WD 7 = Med. Duty DODGE 4WD	55 = Wagon 140" 54 = Wagon 118" 52 = Wagon 140" 51 = Wagon 118" 12 = Van 140" 11 = Van 118" 06 = Front Section 158" 14 = Van 118" 15 = Van 140" 16 = Van 158" 56 = Wagon 158" 01 = Chassis Forward Control 118" 02 = Chassis Forward Control 140"	EX8 = Engine-2.7L I5 Mercedes Turbo Diesel	DGJ = Transmission-5-Spd. Automatic,W5A580

AR = use ase required - = Non illustrrated part

Oil Cooler Lines
Figure 7-610

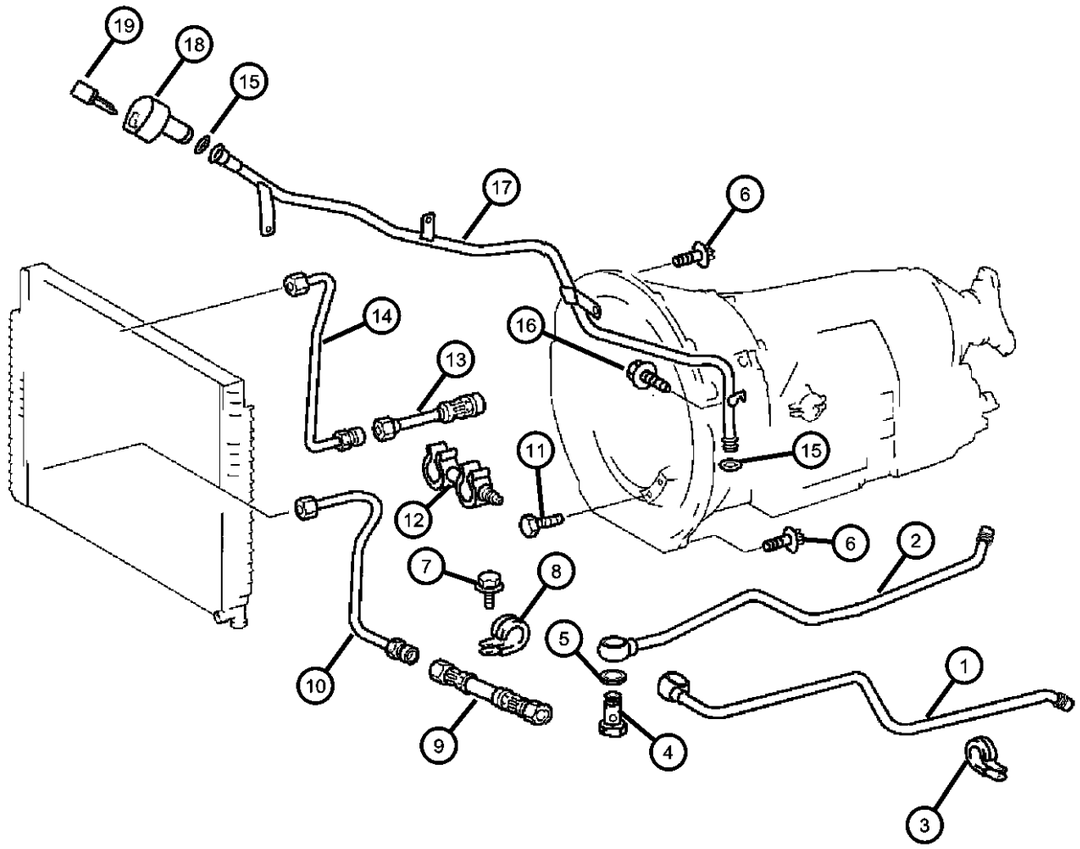

ITEM	PART NUMBER	QTY	LINE	SERIES	BODY	ENGINE	TRANS	TRIM	DESCRIPTION
	05093746AA	1	2, 6				DGJ		
		1	3, 7				DGJ		

SPRINTER (VA)

SERIES	LINE	BODY	ENGINE	TRANSMISSION
L = LOWLINE	3 = HD DODGE 2WD 6 = Lt. Duty DODGE 4WD 2 = Med. Duty DODGE 2WD 7 = Med. Duty DODGE 4WD	55 = Wagon 140" 54 = Wagon 118" 52 = Wagon 140" 51 = Wagon 118" 12 = Van 140" 11 = Van 118" 06 = Front Section 158" 14 = Van 118" 15 = Van 140" 16 = Van 158" 56 = Wagon 158" 01 = Chassis Forward Control 118" 02 = Chassis Forward Control 140"	EX8 = Engine-2.7L I5 Mercedes Turbo Diesel	DGJ = Transmission-5-Spd. Automatic,W5A580

AR = use ase required - = Non illustrrated part

Grille And Related Parts
Figure 7-710

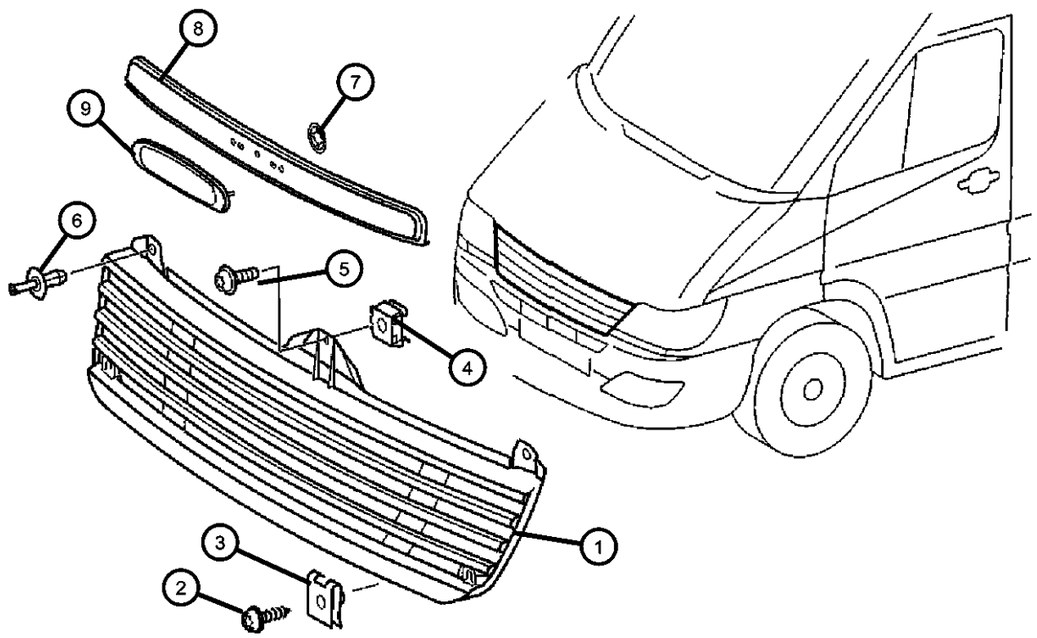

ITEM	PART NUMBER	QTY	LINE	SERIES	BODY	ENGINE	TRANS	TRIM	DESCRIPTION
1									GRILLE, Radiator
	05104507AA	1	6						FREIGHTLINNER
		1	7						FREIGHTLINNER
	05114373AA	1	2, 3			EX8	DGJ		DODGE
2									SCREW
	06104576AA	2	2						
		2	3						
3									NUT, Clip-On
	06104736AA	4	2, 6						
		4	3, 7						
4									NUT
	05126253AA	1	3, 7						
		1	2, 6						
5									SCREW, Hex Flange Head
	06104121AA	1	2, 6						
		1	3, 7						
6									PIN, Push
	06104905AA	2	2						
		2	3, 7						
7									RETAINER, Hood Ornament
	05096429AA	2	2, 6						
		2	3, 7						
8									MOLDING, Hood
	05104400AA	1	6						
		1	7						
9									NAMEPLATE, Hood
	05104449AA	1	6						
		1	7						

SPRINTER (VA)

SERIES	LINE	BODY	ENGINE	TRANSMISSION
L = LOWLINE	3 = HD DODGE 2WD 6 = Lt. Duty DODGE 4WD 2 = Med. Duty DODGE 2WD 7 = Med. Duty DODGE 4WD	55 = Wagon 140" 54 = Wagon 118" 52 = Wagon 140" 51 = Wagon 118" 12 = Van 140" 11 = Van 118" 06 = Front Section 158" 14 = Van 118" 15 = Van 140" 16 = Van 158" 56 = Wagon 158" 01 = Chassis Forward Control 118" 02 = Chassis Forward Control 140"	EX8 = Engine-2.7L I5 Mercedes Turbo Diesel	DGJ = Transmission-5-Spd. Automatic,W5A580

AR = use ase required - = Non illustrrated part

Group - 8

Electrical

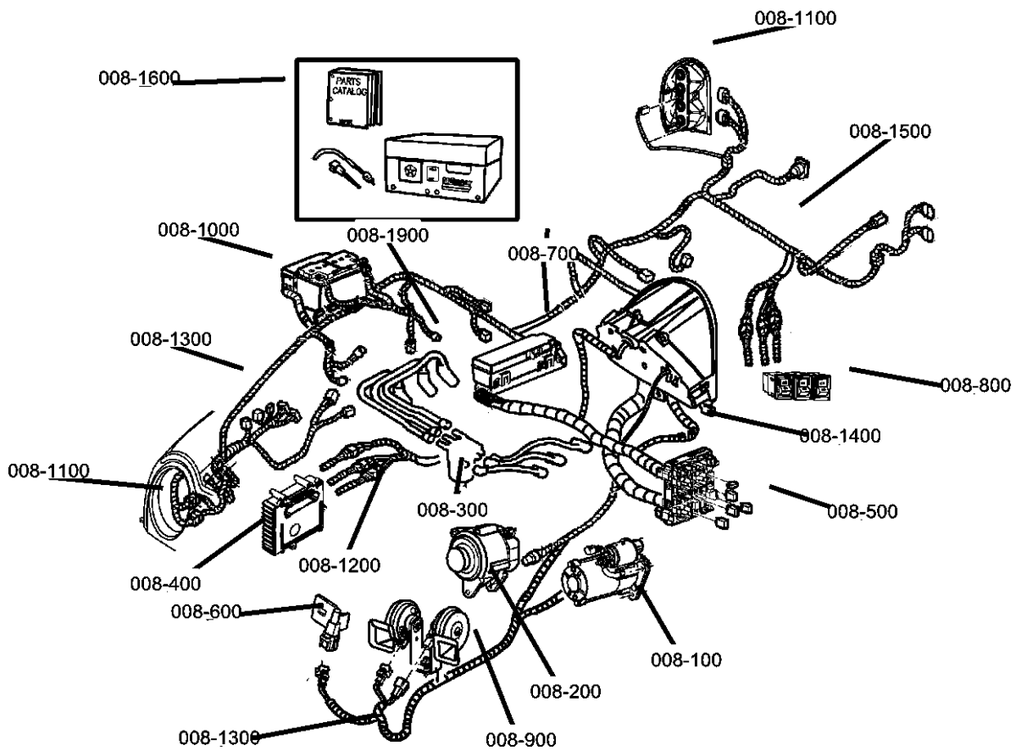

008-1700 Air Bag Systems 	**008-1900** Spark Plugs-Cables-Coils 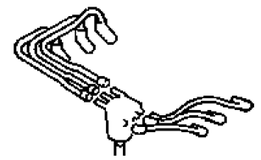	**008-200** Alternators 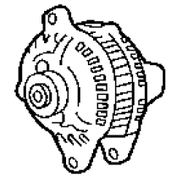	**008-400** Modules 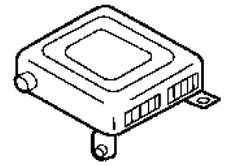
008-500 Relays 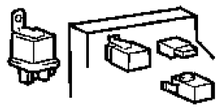	**008-600** Sensors 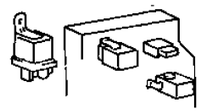	**008-700** Single Board Engine Controllers 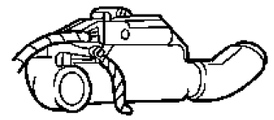	**008-800** Switches 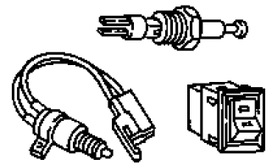
008-900 Horns 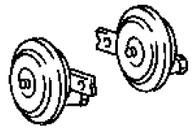			

008-100 Starters 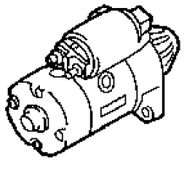	**008-1000** Battery Tray and Cables 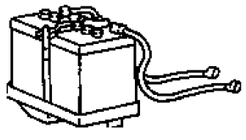	**008-1100** Lamps - Front, Rear and Courtesy 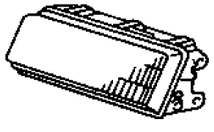	**008-1200** Wiring-Engine & Related Parts 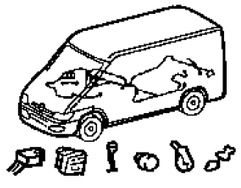
008-1300 Wiring-Headlamp to Dash 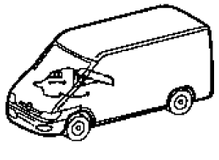	**008-1400** Wiring-Instrument Panel 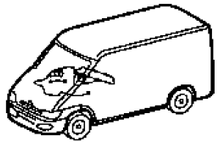	**008-1500** Wiring-Body & Accessories 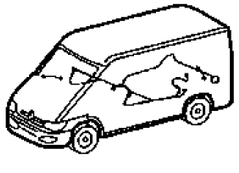	**008-1600** Wiring Repair 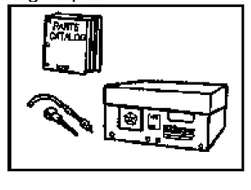

Group - 8 Electrical

Illustration Title — Group-Fig. No.

Starters
Starters & Mounting ..... Fig. 8 - 105

Alternators
Alternators (Generator) ..... Fig. 8 - 205

Modules
Modules Seating Area ..... Fig. 8 - 405
Modules and Related Parts ..... Fig. 8 - 410
Module Back Up ..... Fig. 8 - 415

Relays
Under Seat - Relays & Fuses ..... Fig. 8 - 505
Instrument Panel - Relays & Fuses ..... Fig. 8 - 510

Sensors
Sensors Engine ..... Fig. 8 - 605
Sensors - Drivetrain ..... Fig. 8 - 610
Sensors - Brakes ..... Fig. 8 - 615
Sensor Ambient Temperature ..... Fig. 8 - 620

Single Board Engine Controllers
Single Board Engine Controller (S.B.E.C.) ..... Fig. 8 - 715

Switches
Switches - Instrument Panel ..... Fig. 8 - 805
Switches -Steering Column ..... Fig. 8 - 810
Switches - Door ..... Fig. 8 - 815
Switch Brake ..... Fig. 8 - 820

Horns
Horns & Alarm ..... Fig. 8 - 905

Battery Tray and Cables
Battery Tray & Cables ..... Fig. 8 - 1005

Lamps - Front, Rear and Courtesy
Lamps - Front End ..... Fig. 8 - 1105
Lamps - Rear End ..... Fig. 8 - 1110
Lamps Rear End Cab and Chassis Vehicles ..... Fig. 8 - 1115
Lamps Interior Passenger Van ..... Fig. 8 - 1120
Lamps Interior Cargo Van ..... Fig. 8 - 1125
Lamp - Bulbs ..... Fig. 8 - 1130

Wiring-Engine & Related Parts
Wiring - Engine ..... Fig. 8 - 1210

Wiring-Headlamp to Dash
Wiring - Headlamp & Dash ..... Fig. 8 - 1305

Wiring-Instrument Panel
Wiring - Instrument Panel ..... Fig. 8 - 1405

Wiring-Body & Accessories
Wiring - Body & Accessories ..... Fig. 8 - 1505

Wiring Repair
Connectors Engine Compartment ..... Fig. 8 - 1605
Connectors Body ..... Fig. 8 - 1610
Connectors Roof ..... Fig. 8 - 1615
Connectors Front Doors ..... Fig. 8 - 1620
Connectors Rear Doors ..... Fig. 8 - 1625
Connectors Seating Area ..... Fig. 8 - 1630

Air Bag Systems
Air Bag System Drivers Side ..... Fig. 8 - 1705
Air Bag System Passenger Side ..... Fig. 8 - 1710

Spark Plugs-Cables-Coils
Glow Plugs ..... Fig. 8 - 1910

Starters & Mounting
Figure 8-105

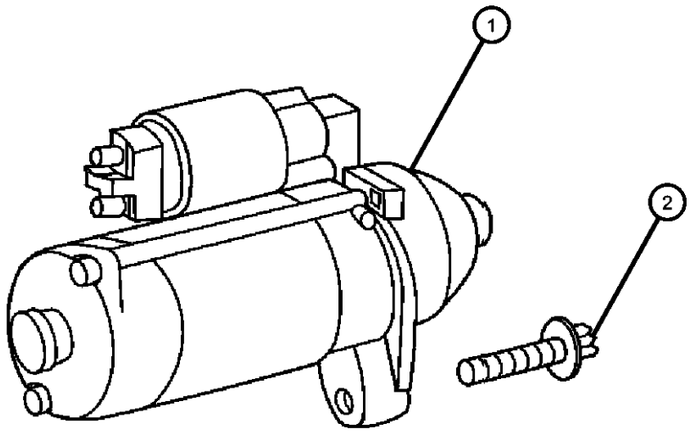

ITEM	PART NUMBER	QTY	LINE	SERIES	BODY	ENGINE	TRANS	TRIM	DESCRIPTION
1									STARTER, Engine
	05117537AA	1	2, 6	L	11, 12, 14, 15, 16	EX9			Valeo
		1	2, 6	L	51, 52, 54, 55, 56	EX9			Valeo
	05134510AA	1		L					Bosch
2	06104053AA	2		L					SCREW, Starter Motor

SPRINTER (VA)

SERIES	LINE	BODY	ENGINE	TRANSMISSION
L = LOWLINE	3 = HD DODGE 2WD 6 = Lt. Duty DODGE 4WD 2 = Med. Duty DODGE 2WD 7 = Med. Duty DODGE 4WD	55 = Wagon 140" 54 = Wagon 118" 52 = Wagon 140" 51 = Wagon 118" 12 = Van 140" 11 = Van 118" 06 = Front Section 158" 14 = Van 118" 15 = Van 140" 16 = Van 158" 56 = Wagon 158" 01 = Chassis Forward Control 118" 02 = Chassis Forward Control 140"	EX8 = Engine-2.7L I5 Mercedes Turbo Diesel	DGJ = Transmission-5-Spd. Automatic,W5A580

Alternators (Generator)
Figure 8-205

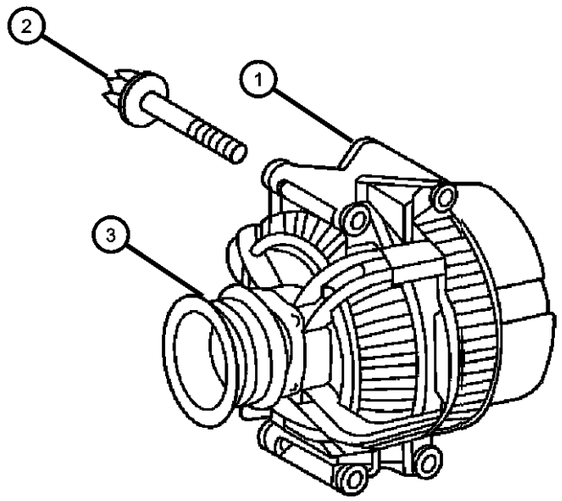

ITEM	PART NUMBER	QTY	LINE	SERIES	BODY	ENGINE	TRANS	TRIM	DESCRIPTION
1									ALTERNATOR
	05117587AA	1	2, 3, 6, 7	L		EX8			200 AMP [BAA]
	05134199AA	1	2, 6	L	01, 02, 06	EX8, EX9			90 amp
		1	2, 6	L	11, 12, 14, 15, 16	EX8, EX9			90 amp
		1	2, 6	L	51, 52, 54, 55, 56	EX8, EX9			90 amp
		1	3, 7	L	02, 06	EX8, EX9			90 amp
		1	3, 7	L	12, 15, 16	EX8, EX9			90 amp
	05134204AB	1	2, 6	L	01, 02, 06	EX8, EX9			[BAQ]
		1	2, 6	L	11, 12, 14, 15, 16	EX8, EX9			[BAQ]
		1	2, 6	L	51, 52, 54, 55, 56	EX8, EX9			[BAQ]
		1	3, 7	L	02, 06	EX8, EX9			[BAQ]
		1	3, 7	L	12, 15, 16	EX8, EX9			[BAQ]
	05134205AA	1	2, 6	L	01, 02, 06	EX8, EX9			[BA6]
		1	2, 6	L	15, 16, 11, 12, 14	EX8, EX9			[BA6]
		1	2, 6	L	51, 52, 54, 55, 56	EX8, EX9			[BA6]
		1	3, 7	L	02, 06	EX8, EX9			[BA6]
		1	3, 7	L	12, 15, 16	EX8, EX9			[BA6]
2									SCREW
	06104035AA	2	2, 6	L	01, 02, 06	EX9			
		2	6, 2	L	11, 12, 14, 15, 16	EX9			
		2	2, 6	L	51, 52, 54, 55, 56	EX9			
3									PULLEY, Alternator
	05117591AA	1	2, 6	L	01, 02, 06	EX8			90 AMP
		1	2, 6	L	11, 12, 14, 15, 16	EX8			90 AMP

SPRINTER (VA)

SERIES	LINE	BODY	ENGINE	TRANSMISSION
L = LOWLINE	3 = HD DODGE 2WD 6 = Lt. Duty DODGE 4WD 2 = Med. Duty DODGE 2WD 7 = Med. Duty DODGE 4WD	55 = Wagon 140" 54 = Wagon 118" 52 = Wagon 140" 51 = Wagon 118" 12 = Van 140" 11 = Van 118" 06 = Front Section 158" 14 = Van 118" 15 = Van 140" 16 = Van 158" 56 = Wagon 158" 01 = Chassis Forward Control 118" 02 = Chassis Forward Control 140"	EX8 = Engine-2.7L I5 Mercedes Turbo Diesel	DGJ = Transmission-5-Spd. Automatic,W5A580

Alternators (Generator)
Figure 8-205

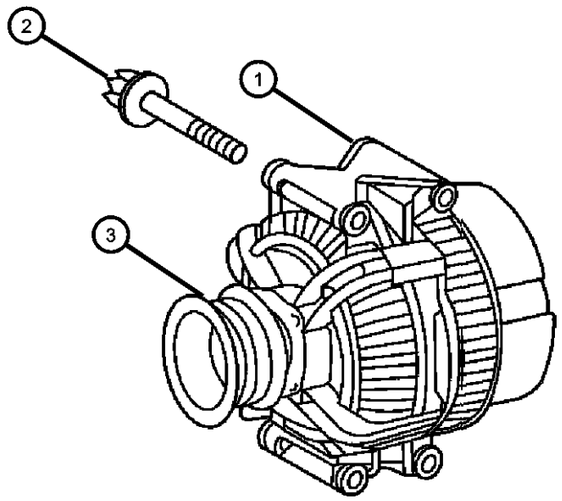

ITEM	PART NUMBER	QTY	LINE	SERIES	BODY	ENGINE	TRANS	TRIM	DESCRIPTION
		1	2, 6	L	51, 52, 54, 55, 56	EX8			90 AMP
		1	3, 7	L	02, 06	EX8			90 AMP
-4									REGULATOR, Alternator
	05133774AA	1	2, 6	L	01, 02, 06				90 AMP
		1	2, 6	L	11, 12, 14, 15, 16				90 AMP
		1	2, 6	L	51, 52, 54, 55, 56				90 AMP
		1	3, 7	L	02, 06				90 AMP
		1	3, 7	L	12, 15, 16				90 AMP

SPRINTER (VA)

SERIES	LINE	BODY	ENGINE	TRANSMISSION
L = LOWLINE	3 = HD DODGE 2WD 6 = Lt. Duty DODGE 4WD 2 = Med. Duty DODGE 2WD 7 = Med. Duty DODGE 4WD	55 = Wagon 140" 54 = Wagon 118" 52 = Wagon 140" 51 = Wagon 118" 12 = Van 140" 11 = Van 118" 06 = Front Section 158" 14 = Van 118" 15 = Van 140" 16 = Van 158" 56 = Wagon 158" 01 = Chassis Forward Control 118" 02 = Chassis Forward Control 140"	EX8 = Engine-2.7L I5 Mercedes Turbo Diesel	DGJ = Transmission-5-Spd. Automatic,W5A580

Modules Seating Area
Figure 8-405

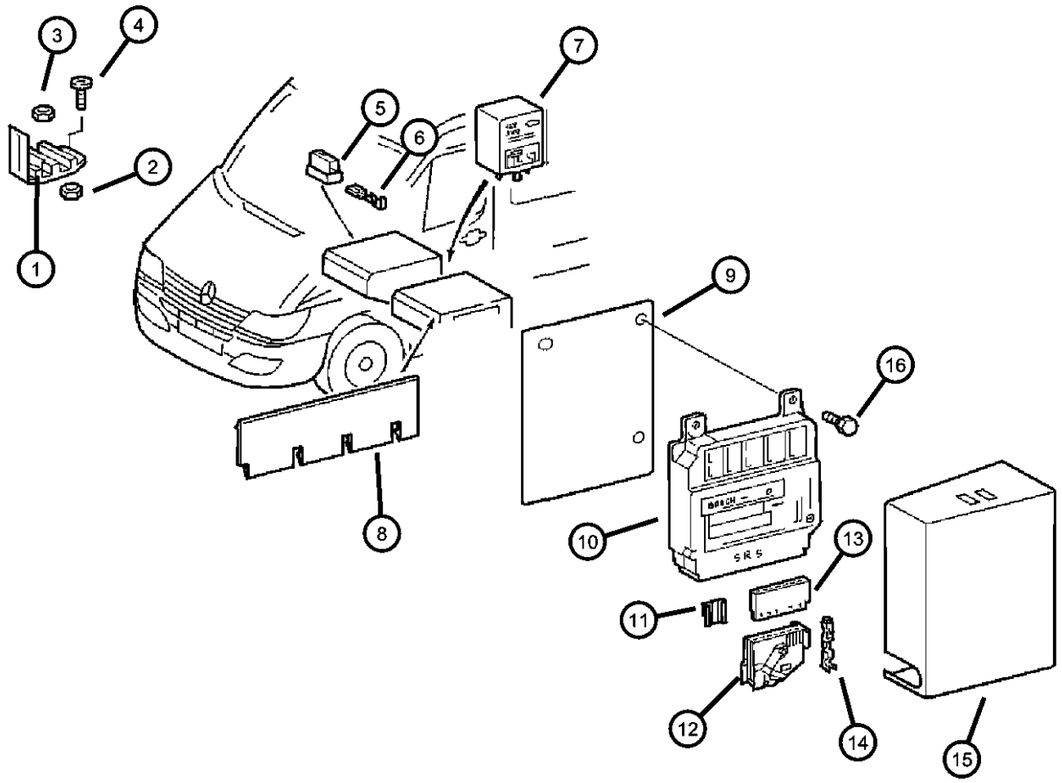

ITEM	PART NUMBER	QTY	LINE	SERIES	BODY	ENGINE	TRANS	TRIM	DESCRIPTION
1									RETAINER, Wiring Harness
	05120249AA	1	2, 6	L	11, 12, 14, 15, 16				
		1	2, 6	L	51, 52, 54, 55, 56				
		1	3, 7	L	12, 15, 16				
2	06104723AA	2	2, 6	L	01, 02, 06				NUT
3									NUT
	05126203AA	2	2, 6	L	11, 12, 14, 15, 16				
		2	2, 6	L	51, 52, 54, 55, 56				
		2	3, 7	L	12, 15, 16				
4									BOLT, Hex Head
	05126100AA	2	2, 6	L	01, 02, 06				
		2	2, 6	L	11, 12, 14, 15, 16				
		2	2, 6	L	51, 52, 54, 55, 56				
		2	3, 7	L	12, 15, 16				
5									INSULATOR, 2 Way Female
	05103754AA	1	2, 6	L	11, 12, 14, 15, 16				
		1	2, 6	L	51, 52, 54, 55, 56				
		1	3, 7	L	12, 15, 16				
6									TERMINAL, Female
	05133359AA	99	2, 6	L	11, 12, 14, 15, 16				
		99	2, 6	L	51, 52, 54, 55, 56				
		99	3, 7	L	12, 15, 16				
7		99							CONTROL UNIT, NONE, SPRINTER, (NOT REQUIRED)
8									PANEL, Seat Base

SPRINTER (VA)

SERIES	LINE	BODY	ENGINE	TRANSMISSION
L = LOWLINE	3 = HD DODGE 2WD 6 = Lt. Duty DODGE 4WD 2 = Med. Duty DODGE 2WD 7 = Med. Duty DODGE 4WD	55 = Wagon 140" 54 = Wagon 118" 52 = Wagon 140" 51 = Wagon 118" 12 = Van 140" 11 = Van 118" 06 = Front Section 158" 14 = Van 118" 15 = Van 140" 16 = Van 158" 56 = Wagon 158" 01 = Chassis Forward Control 118" 02 = Chassis Forward Control 140"	EX8 = Engine-2.7L I5 Mercedes Turbo Diesel	DGJ = Transmission-5-Spd. Automatic,W5A580

Modules Seating Area
Figure 8-405

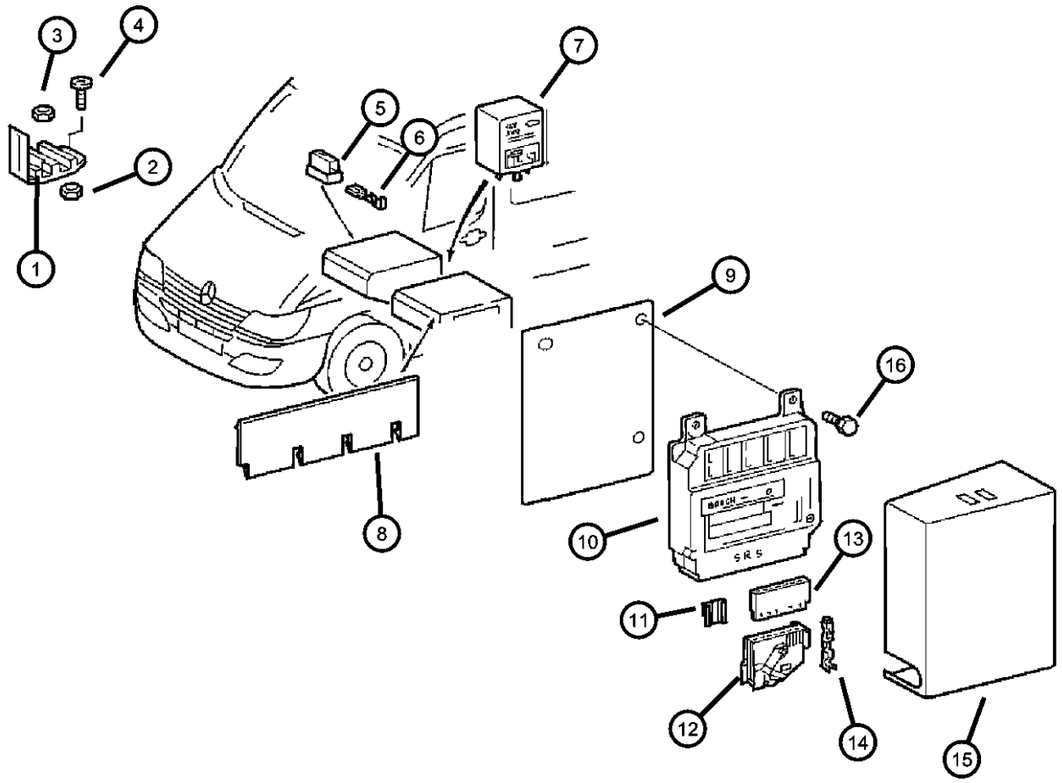

ITEM	PART NUMBER	QTY	LINE	SERIES	BODY	ENGINE	TRANS	TRIM	DESCRIPTION
	05123542AA	2	2, 6	L	11, 12, 14, 15, 16				
		2	2, 6	L	51, 52, 54, 55, 56				
		2	2, 6	L	52, 55				
		6	2, 6	L	56				
9									PLATE, Air Bag Module
	05120891AA	1	2, 6	L	11, 12, 14, 15, 16				
		1	2, 6	L	51, 52, 54, 55, 56				
		1	3, 7	L	12, 15, 16				
10									MODULE, Air Bag Control
	05119435AA	1	2, 6	L	11, 12, 14, 15, 16				
		1	2, 6	L	51, 52, 54, 55, 56				
		1	3, 7	L	12, 15, 16				
11									COVER, Insulator, Wiring Protection
	05120412AA	1	2, 6	L	11, 12, 14, 15, 16				
		1	2, 6	L	51, 52, 54, 55, 56				
		1	3, 7	L	12, 15, 16				
12									CONNECTOR, Wiring
	05120799AA	1	2, 6	L	11, 12, 14, 15, 16				
		1	2, 6	L	51, 52, 54, 55, 56				
		1	3, 7	L	12, 15, 16				
13									CONNECTOR
	05120834AA	1	2, 6	L	11, 12, 14, 15, 16				

SPRINTER (VA)

SERIES	LINE	BODY	ENGINE	TRANSMISSION
L = LOWLINE	3 = HD DODGE 2WD 6 = Lt. Duty DODGE 4WD 2 = Med. Duty DODGE 2WD 7 = Med. Duty DODGE 4WD	55 = Wagon 140" 54 = Wagon 118" 52 = Wagon 140" 51 = Wagon 118" 12 = Van 140" 11 = Van 118" 06 = Front Section 158" 14 = Van 118" 15 = Van 140" 16 = Van 158" 56 = Wagon 158" 01 = Chassis Forward Control 118" 02 = Chassis Forward Control 140"	EX8 = Engine-2.7L I5 Mercedes Turbo Diesel	DGJ = Transmission-5-Spd. Automatic,W5A580

Modules Seating Area
Figure 8-405

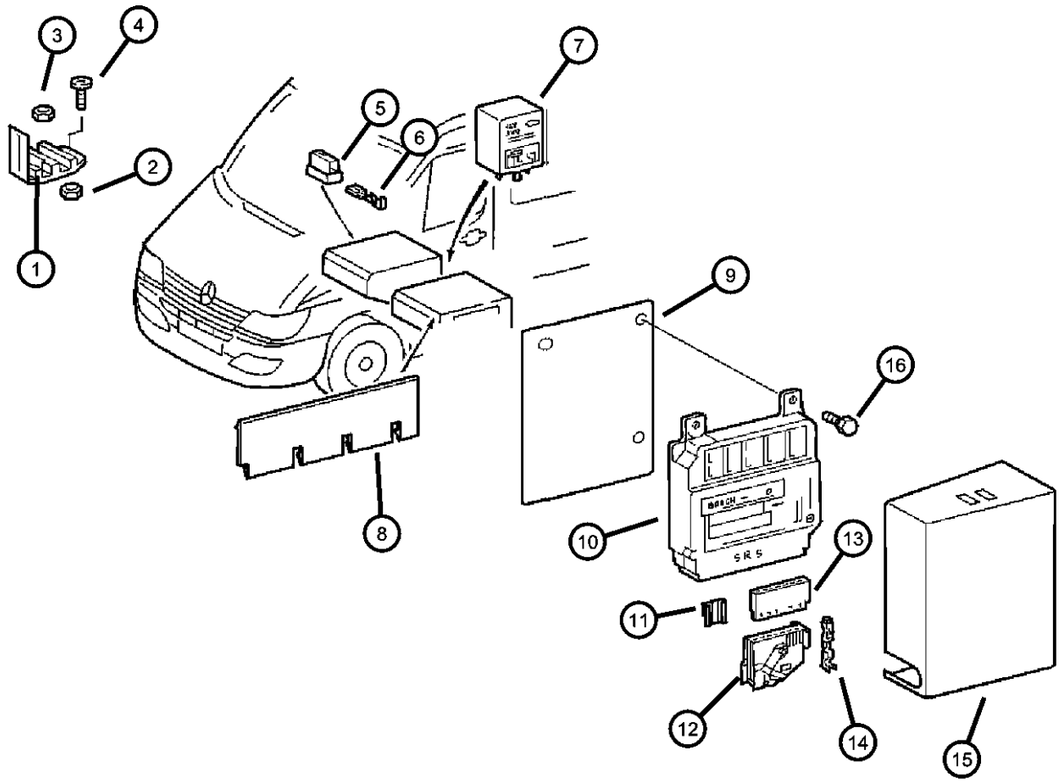

ITEM	PART NUMBER	QTY	LINE	SERIES	BODY	ENGINE	TRANS	TRIM	DESCRIPTION
		1	2, 6	L	51, 52, 54, 55, 56				
		1	3, 7	L	12, 15, 16				
14									TERMINAL
	05120549AA	1	2, 6	L	11, 12, 14, 15, 16				
		1	2, 6	L	51, 52, 54, 55, 56				
		1	3, 7	L	12, 15, 16				
15									COVER, Air Bag Module
	05104148AA	1	2, 6	L	11, 12, 14, 15, 16				
		1	2, 6	L	51, 52, 54, 55, 56				
		1	3, 7	L	12, 15, 16				
16									SCREW
	06104005AA	2	2, 6	L	11, 12, 14, 15, 16				
		2	2, 6	L	51, 52, 54, 55, 56				
		2	3, 7	L	12, 15, 16				

SPRINTER (VA)

SERIES	LINE	BODY	ENGINE	TRANSMISSION
L = LOWLINE	3 = HD DODGE 2WD 6 = Lt. Duty DODGE 4WD 2 = Med. Duty DODGE 2WD 7 = Med. Duty DODGE 4WD	55 = Wagon 140" 54 = Wagon 118" 52 = Wagon 140" 51 = Wagon 118" 12 = Van 140" 11 = Van 118" 06 = Front Section 158" 14 = Van 118" 15 = Van 140" 16 = Van 158" 56 = Wagon 158" 01 = Chassis Forward Control 118" 02 = Chassis Forward Control 140"	EX8 = Engine-2.7L I5 Mercedes Turbo Diesel	DGJ = Transmission-5-Spd. Automatic,W5A580

Modules and Related Parts
Figure 8-410

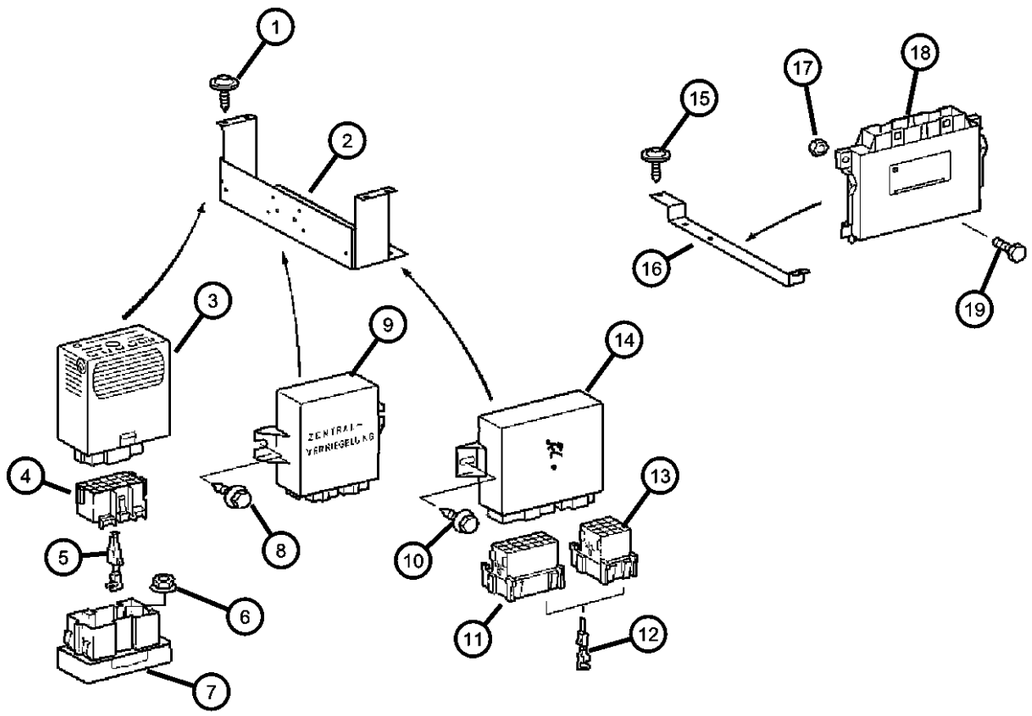

ITEM	PART NUMBER	QTY	LINE	SERIES	BODY	ENGINE	TRANS	TRIM	DESCRIPTION
1									SCREW, Tapping
	06104573AA	4	2, 6	L	01, 02, 06				
		4	2, 6	L	11, 12, 14, 15, 16				
		4	2, 6	L	51, 52, 54, 55, 56				
		4	3, 7	L	12, 15, 16				
2									BRACKET, Fuse Block
	05120844AA	1	2, 6	L	11, 12, 14, 15, 16				
		1	2, 6	L	51, 52, 54, 55, 56				
		1	2, 6	L	01, 02, 06				
		1	3, 7	L	12, 15, 16				
3									CONTROL UNIT, NONE, SPRINTER
	05103648AA	1	2, 6	L	01, 02, 06				
	05103899AA	1	2, 6	L	11, 12, 14, 15, 16				Dome Lamp
		1	2, 6	L	51, 52, 54, 55, 56				Dome Lamp
		1	3, 7	L	12, 15, 16				Dome Lamp
4									CONNECTOR
	05133333AA	1	2, 6	L	01, 02, 06				
		1	2, 6	L	11, 12, 14, 15, 16				
		1	2, 6	L	51, 52, 54, 55, 56				
		1	3, 7	L	12, 15, 16				
5									TERMINAL
	05103881AA	99	2, 6	L	01, 02, 06				
		1	2, 6	L	11, 12, 14, 15, 16				
		1	3, 7	L	12, 15, 16				

SPRINTER (VA)

SERIES	LINE	BODY	ENGINE	TRANSMISSION
L = LOWLINE	3 = HD DODGE 2WD 6 = Lt. Duty DODGE 4WD 2 = Med. Duty DODGE 2WD 7 = Med. Duty DODGE 4WD	55 = Wagon 140" 54 = Wagon 118" 52 = Wagon 140" 51 = Wagon 118" 12 = Van 140" 11 = Van 118" 06 = Front Section 158" 14 = Van 118" 15 = Van 140" 16 = Van 158" 56 = Wagon 158" 01 = Chassis Forward Control 118" 02 = Chassis Forward Control 140"	EX8 = Engine-2.7L I5 Mercedes Turbo Diesel	DGJ = Transmission-5-Spd. Automatic,W5A580

Modules and Related Parts
Figure 8-410

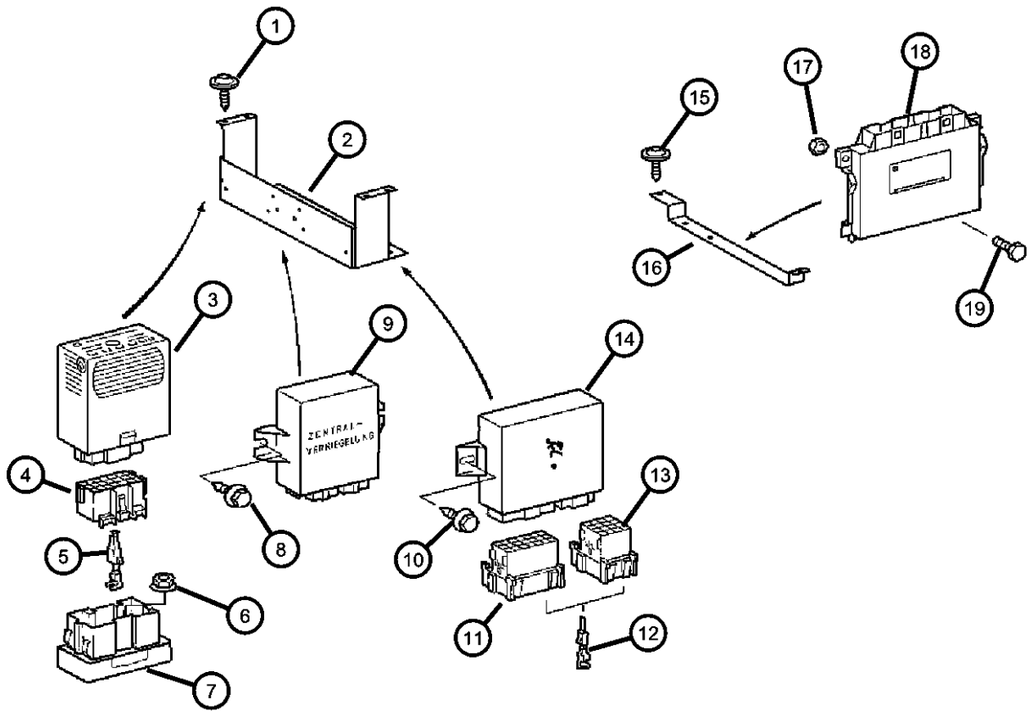

ITEM	PART NUMBER	QTY	LINE	SERIES	BODY	ENGINE	TRANS	TRIM	DESCRIPTION
		1	2, 6	L	51, 52, 54, 55, 56				
6									NUT
	06104714AA	1	2, 6	L	01, 02, 06				
		2	2, 6	L	11, 12, 14, 15, 16		DGJ		
		2	2, 6	L	51, 52, 54, 55, 56		DGJ		
		2	3, 7	L	12, 15, 16		DGJ		
7									CONNECTOR
	05120506AA	1	2, 6	L	01, 02, 06				
		1	2, 6	L	11, 12, 14, 15, 16				
		1	2, 6	L	51, 52, 54, 55, 56				
		1	3, 7	L	12, 15, 16				
8									SCREW
	05104609AA	4	2, 6	L	01, 02, 06				
		2	2, 6	L	11, 12, 14, 15, 16				
		2	2, 6	L	51, 52, 54, 55, 56				
		2	3, 7	L	12, 15, 16				
9									MODULE, Central Locking
	05127217AA	1	2, 6	L	11, 12, 14, 15, 16				
		1	2, 6	L	01, 02, 06				
		1	3, 7	L	12, 15, 16				
	05129301AA	1	2, 6	L	51, 52, 54, 55, 56				
10									SCREW, Tapping
	06104574AA	2	2, 6	L	01, 02, 06				

SPRINTER (VA)

SERIES	LINE	BODY	ENGINE	TRANSMISSION
L = LOWLINE	3 = HD DODGE 2WD 6 = Lt. Duty DODGE 4WD 2 = Med. Duty DODGE 2WD 7 = Med. Duty DODGE 4WD	55 = Wagon 140" 54 = Wagon 118" 52 = Wagon 140" 51 = Wagon 118" 12 = Van 140" 11 = Van 118" 06 = Front Section 158" 14 = Van 118" 15 = Van 140" 16 = Van 158" 56 = Wagon 158" 01 = Chassis Forward Control 118" 02 = Chassis Forward Control 140"	EX8 = Engine-2.7L I5 Mercedes Turbo Diesel	DGJ = Transmission-5-Spd. Automatic,W5A580

Modules and Related Parts
Figure 8-410

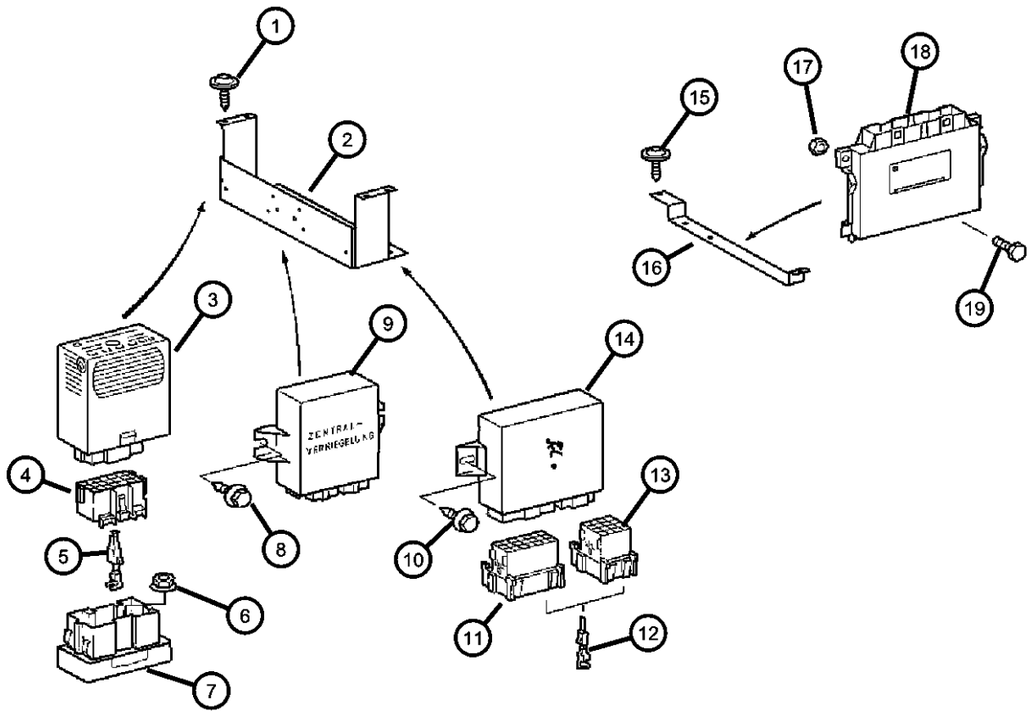

ITEM	PART NUMBER	QTY	LINE	SERIES	BODY	ENGINE	TRANS	TRIM	DESCRIPTION
		2	2, 6	L	11, 12, 14, 15, 16				
		2	2, 6	L	51, 52, 54, 55, 56				
11									CONNECTOR
	05133333AA	1	2, 6	L	01, 02, 06				
		1	2, 6	L	11, 12, 14, 15, 16				
		1	2, 6	L	51, 52, 54, 55, 56				
		1	3, 7	L	12, 15, 16				
12									TERMINAL
	05120526AA	1	2, 6	L	01, 02, 06				
	05120526AB	1	2, 6	L	11, 12, 14, 15, 16				
		1	2, 6	L	51, 52, 54, 55, 56				
		1	3, 7	L	12, 15, 16				
13									CONNECTOR
	05120552AA	1	2, 6	L	01, 02, 06				
		1	2, 6	L	11, 12, 14, 15, 16				
		1	2, 6	L	51, 52, 54, 55, 56				
		1	3, 7	L	12, 15, 16				
14									CONTROL, Theftproof
	05119439AA	1	2, 6	L	01, 02, 06				
		1	2, 6	L	11, 12, 14, 15, 16				
		1	2, 6	L	51, 52, 54, 55, 56				
		1	3, 7	L	12, 15, 16				
15									SCREW, Tapping

SPRINTER (VA)

SERIES	LINE	BODY	ENGINE	TRANSMISSION
L = LOWLINE	3 = HD DODGE 2WD 6 = Lt. Duty DODGE 4WD 2 = Med. Duty DODGE 2WD 7 = Med. Duty DODGE 4WD	55 = Wagon 140" 54 = Wagon 118" 52 = Wagon 140" 51 = Wagon 118" 12 = Van 140" 11 = Van 118" 06 = Front Section 158" 14 = Van 118" 15 = Van 140" 16 = Van 158" 56 = Wagon 158" 01 = Chassis Forward Control 118" 02 = Chassis Forward Control 140"	EX8 = Engine-2.7L I5 Mercedes Turbo Diesel	DGJ = Transmission-5-Spd. Automatic,W5A580

Modules and Related Parts
Figure 8-410

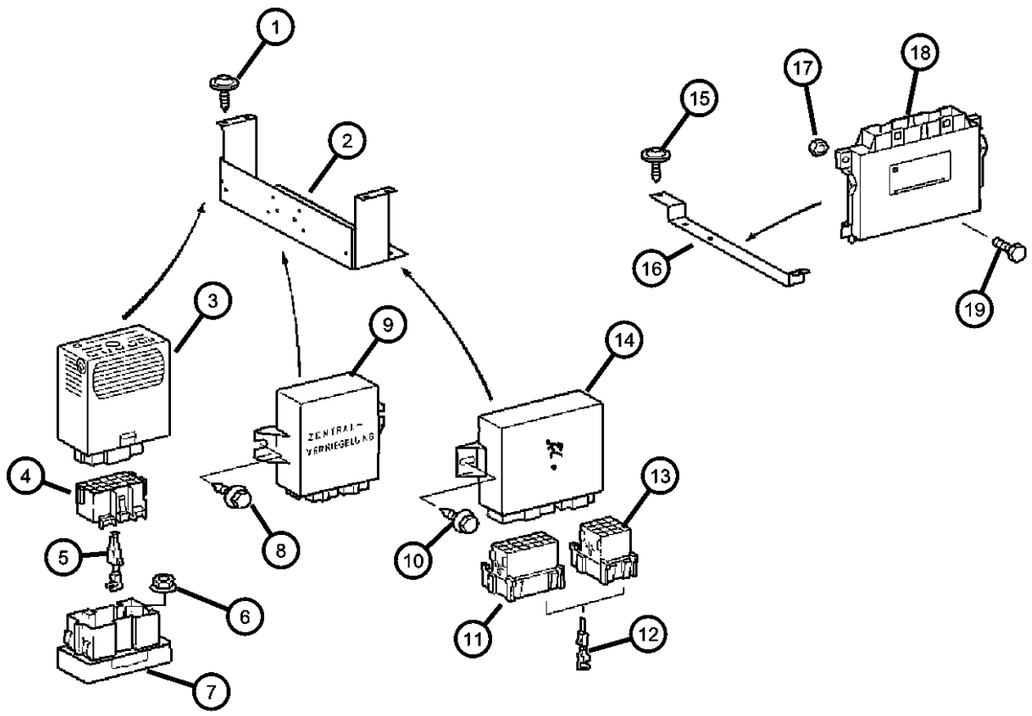

ITEM	PART NUMBER	QTY	LINE	SERIES	BODY	ENGINE	TRANS	TRIM	DESCRIPTION
	06104573AA	2	2, 6	L	11, 12, 14, 15, 16				
		4	2, 6	L	01, 02, 06				
		2	2, 6	L	51, 52, 54, 55, 56				
		2	3, 7	L	12, 15, 16				
16									BRACKET, Control Unit
	05120842AA	2	2, 6	L	01, 02, 06		DGJ		
		2	2, 6	L	11, 12, 14, 15, 16		DGJ		
		2	2, 6	L	51, 52, 54, 55, 56		DGJ		
		2	3, 7	L	12, 15, 16		DGJ		
17									NUT
	06104714AA	1	2, 6	L	01, 02, 06				
		2	2, 6	L	11, 12, 14, 15, 16		DGJ		
		2	2, 6	L	51, 52, 54, 55, 56		DGJ		
		2	3, 7	L	15, 16, 12		DGJ		
18									MODULE, Transmission Control
	05135888AA	1	2, 6	L	01, 02, 06		DGJ		
		1	2, 6	L	11, 12, 14, 15, 16		DGJ		
		1	2, 6	L	51, 52, 54, 55, 56		DGJ		
		1	3, 7	L	12, 15, 16		DGJ		
19									SCREW, Hex Head
	06104173AA	2	2, 6	L	01, 02, 06		DGJ		
		2	2, 6	L	11, 12, 14, 15, 16		DGJ		
		2	2, 6	L	56, 51, 52, 54, 55		DGJ		

SPRINTER (VA)

SERIES	LINE	BODY	ENGINE	TRANSMISSION
L = LOWLINE	3 = HD DODGE 2WD 6 = Lt. Duty DODGE 4WD 2 = Med. Duty DODGE 2WD 7 = Med. Duty DODGE 4WD	55 = Wagon 140" 54 = Wagon 118" 52 = Wagon 140" 51 = Wagon 118" 12 = Van 140" 11 = Van 118" 06 = Front Section 158" 14 = Van 118" 15 = Van 140" 16 = Van 158" 56 = Wagon 158" 01 = Chassis Forward Control 118" 02 = Chassis Forward Control 140"	EX8 = Engine-2.7L I5 Mercedes Turbo Diesel	DGJ = Transmission-5-Spd. Automatic,W5A580

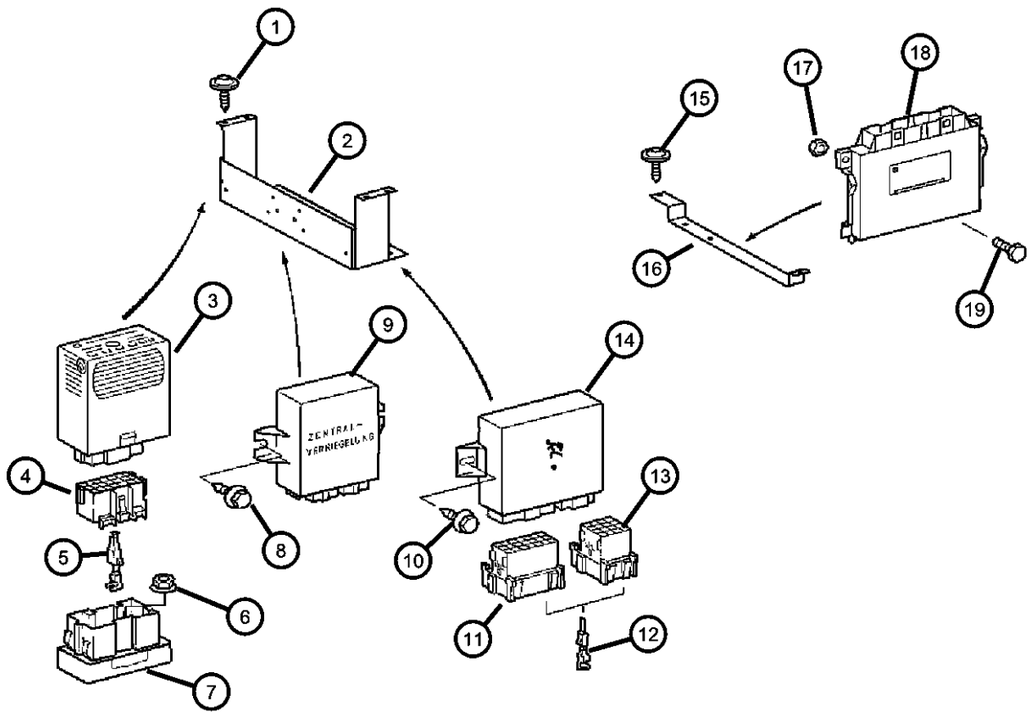

ITEM	PART NUMBER	QTY	LINE	SERIES	BODY	ENGINE	TRANS	TRIM	DESCRIPTION
		2	3, 7	L	12, 15, 16		DGJ		
-20									FLASHER MODULE, FLASHER MODULE-TURN SIGNAL
	05139996AA	1	2, 6	L	01, 02, 06				
		1	2, 6	L	11, 12, 14, 15, 16				
		1	2, 6	L	51, 52, 54, 55, 56				
		1	3, 7	L	02, 06				
		1	3, 7	L	12, 15, 16				

SPRINTER (VA)

SERIES	LINE	BODY	ENGINE	TRANSMISSION
L = LOWLINE	3 = HD DODGE 2WD 6 = Lt. Duty DODGE 4WD 2 = Med. Duty DODGE 2WD 7 = Med. Duty DODGE 4WD	55 = Wagon 140" 54 = Wagon 118" 52 = Wagon 140" 51 = Wagon 118" 12 = Van 140" 11 = Van 118" 06 = Front Section 158" 14 = Van 118" 15 = Van 140" 16 = Van 158" 56 = Wagon 158" 01 = Chassis Forward Control 118" 02 = Chassis Forward Control 140"	EX8 = Engine-2.7L I5 Mercedes Turbo Diesel	DGJ = Transmission-5-Spd. Automatic,W5A580

Module Back Up
Figure 8-415

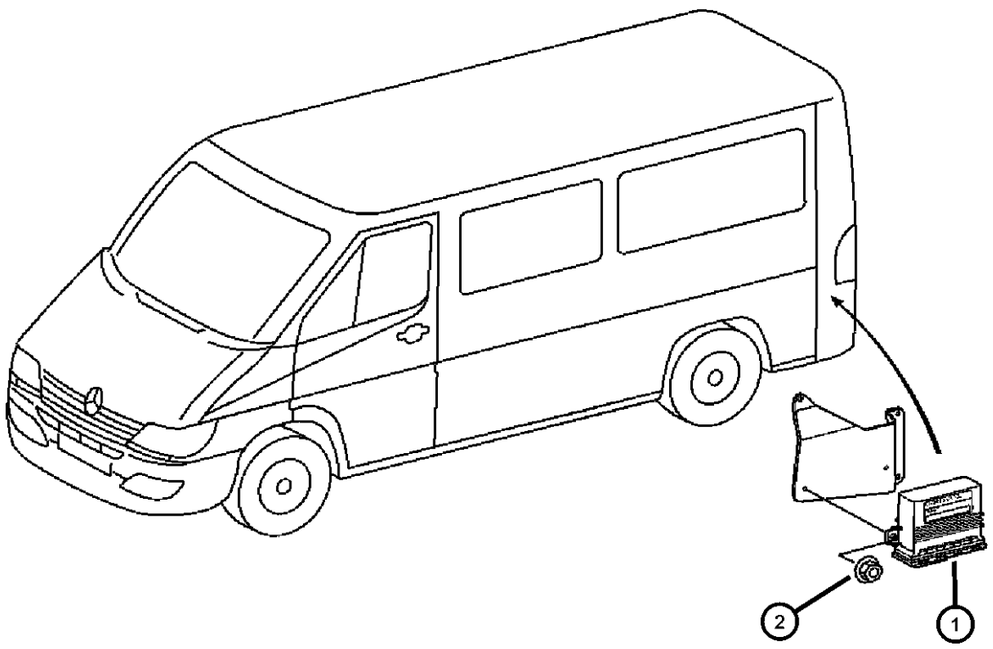

ITEM	PART NUMBER	QTY	LINE	SERIES	BODY	ENGINE	TRANS	TRIM	DESCRIPTION
1									CONTROL UNIT, Back Up Aid
	05120828AA	1	2, 6	L	11, 12, 14, 15, 16				
		1	2, 6	L	51, 52, 54, 55, 56				
		1	3, 7	L	12, 15, 16				
2									NUT, Hex
	06104911AA	2	2, 6	L	11, 12, 14, 15, 16				
		2	2, 6	L	51, 52, 54, 55, 56				
		2	3, 7	L	12, 15, 16				

SPRINTER (VA)

SERIES	LINE	BODY	ENGINE	TRANSMISSION
L = LOWLINE	3 = HD DODGE 2WD 6 = Lt. Duty DODGE 4WD 2 = Med. Duty DODGE 2WD 7 = Med. Duty DODGE 4WD	55 = Wagon 140" 54 = Wagon 118" 52 = Wagon 140" 51 = Wagon 118" 12 = Van 140" 11 = Van 118" 06 = Front Section 158" 14 = Van 118" 15 = Van 140" 16 = Van 158" 56 = Wagon 158" 01 = Chassis Forward Control 118" 02 = Chassis Forward Control 140"	EX8 = Engine-2.7L I5 Mercedes Turbo Diesel	DGJ = Transmission-5-Spd. Automatic,W5A580

Under Seat - Relays & Fuses
Figure 8-505

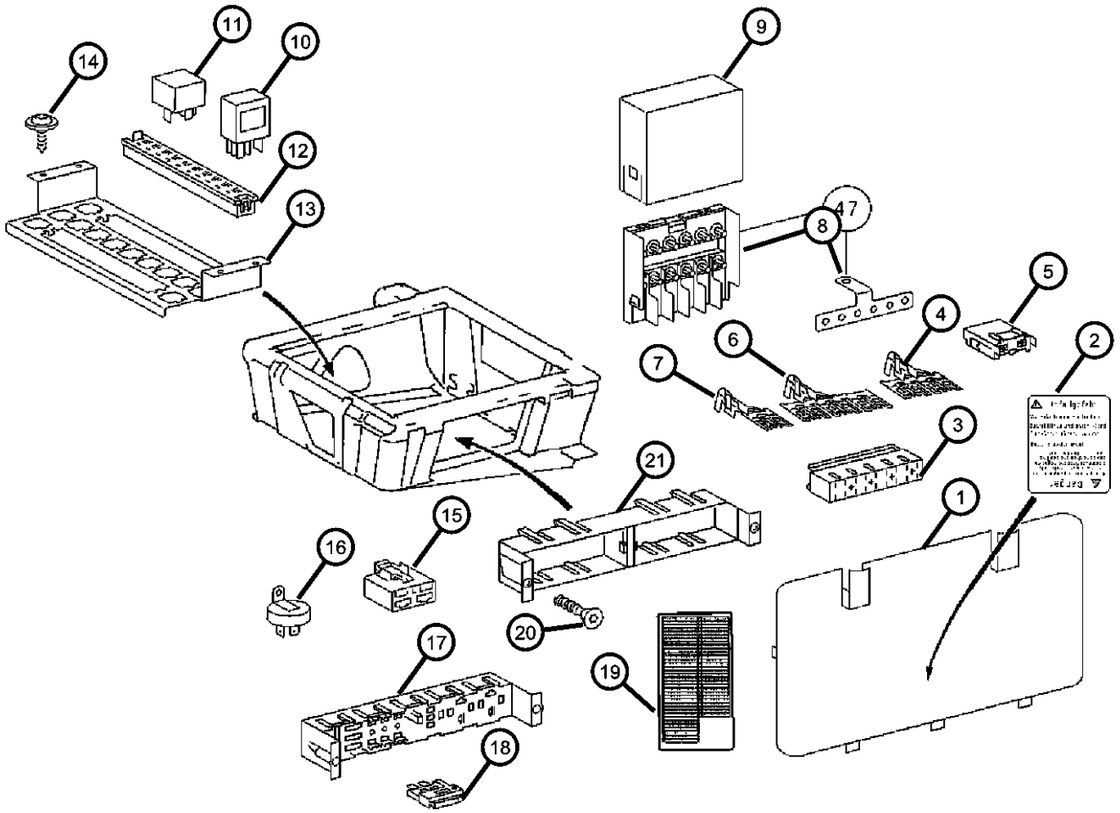

ITEM	PART NUMBER	QTY	LINE	SERIES	BODY	ENGINE	TRANS	TRIM	DESCRIPTION
1									COVER, Fuse Access
	05104149AA	1	2, 6	L	02, 06, 01				
		1	2, 6	L	11, 12, 14, 15, 16				
		1	2, 6	L	51, 52, 54, 55, 56				
	05133683AA	1	3, 7	L	12, 15, 16				
2									LABEL, Warning
	05121112AA	1	2, 6	L	01, 02, 06				
		1	2, 6	L	11, 12, 14, 15, 16				
		1	2, 6	L	51, 52, 54, 55, 56				
		1	3, 7	L	12, 15, 16				
3									CONNECTOR
	05120399AA	1	2, 6	L	51, 52, 54, 55, 56				Number 19 thru 27
		1	3, 7	L	12, 15, 16				Number 19 thru 27
	05120401AA	1	2, 6	L	11, 12, 14, 15, 16				Number 1 thru 9
		1	2, 6	L	51, 52, 54, 55, 56				Number 1 thru 9
		1	3, 7	L	16, 12, 15				Number 1 thru 9
	05120402AA	1	2, 6	L	11, 12, 14, 15, 16				Number 10 thru 18
		1	2, 6	L	11, 12, 14, 15, 16				Number 19 thru 27
	05120403AA	1	2, 6	L	11, 12, 14, 15, 16				Number 28 thru 36
		1	2, 6	L	51, 52, 54, 55, 56				Number 28 thru 36
		1	3, 7	L	12, 15, 16				Number 28 thru 36
		1	2, 6	L	51, 52, 54, 55, 56				Number 10 thru 18
		1	3, 7	L	12, 15, 16				Number 10 thru 18

SPRINTER (VA)

SERIES	LINE	BODY	ENGINE	TRANSMISSION
L = LOWLINE	3 = HD DODGE 2WD 6 = Lt. Duty DODGE 4WD 2 = Med. Duty DODGE 2WD 7 = Med. Duty DODGE 4WD	55 = Wagon 140" 54 = Wagon 118" 52 = Wagon 140" 51 = Wagon 118" 12 = Van 140" 11 = Van 118" 06 = Front Section 158" 14 = Van 118" 15 = Van 140" 16 = Van 158" 56 = Wagon 158" 01 = Chassis Forward Control 118" 02 = Chassis Forward Control 140"	EX8 = Engine-2.7L I5 Mercedes Turbo Diesel	DGJ = Transmission-5-Spd. Automatic,W5A580

Under Seat - Relays & Fuses
Figure 8-505

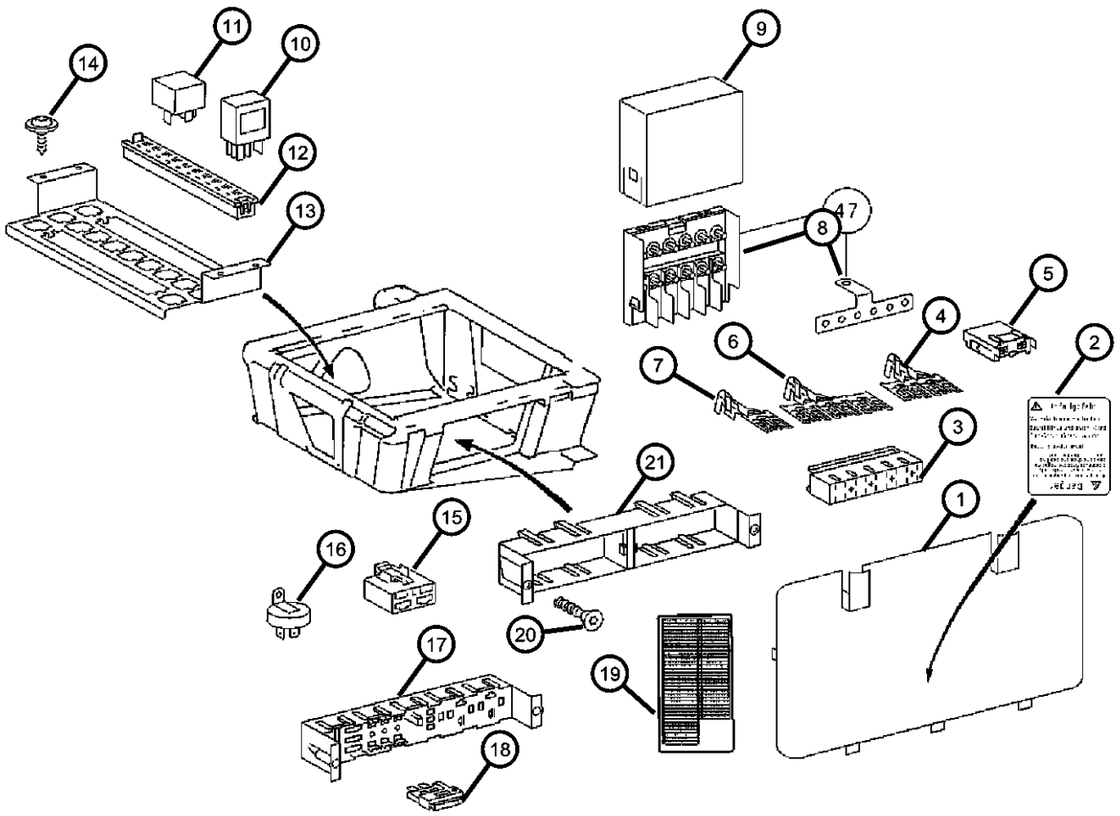

ITEM	PART NUMBER	QTY	LINE	SERIES	BODY	ENGINE	TRANS	TRIM	DESCRIPTION
		1	2, 6	L	01, 02, 06				
4									TERMINAL
	05133404AA	1	2, 6	L	01, 02, 06				
		99	2, 6	L	11, 12, 14, 15, 16				
		99	2, 6	L	51, 52, 54, 55, 56				
		99	3, 7	L	12, 15, 16				
5									FUSE
	05133407AA	1	2, 6	L	01, 02, 06				
		1	2, 6	L	11, 12, 14, 15, 16				
		1	2, 6	L	54, 55, 56, 51, 52				
		1	3, 7	L	12, 15, 16				
6									TERMINAL
	05133405AA	99	2, 6	L	11, 12, 14, 15, 16				
		99	2, 6	L	51, 52, 54, 55, 56				
		99	3, 7	L	12, 15, 16				
		1	2, 6	L	01, 02, 06				
7									TERMINAL
	05133403AA	99	2, 6	L	01, 02, 06				
		99	2, 6	L	11, 12, 14, 15, 16				
		99	2, 6	L	51, 52, 54, 55, 56				
		99	3, 7	L	12, 15, 16				
8									HOLDER, Fuse
	05103829AA	1	2, 6	L	01, 02, 06				
		1	2, 6	L	11, 12, 14, 15, 16				

SPRINTER (VA)

SERIES	LINE	BODY	ENGINE	TRANSMISSION
L = LOWLINE	3 = HD DODGE 2WD 6 = Lt. Duty DODGE 4WD 2 = Med. Duty DODGE 2WD 7 = Med. Duty DODGE 4WD	55 = Wagon 140" 54 = Wagon 118" 52 = Wagon 140" 51 = Wagon 118" 12 = Van 140" 11 = Van 118" 06 = Front Section 158" 14 = Van 118" 15 = Van 140" 16 = Van 158" 56 = Wagon 158" 01 = Chassis Forward Control 118" 02 = Chassis Forward Control 140"	EX8 = Engine-2.7L I5 Mercedes Turbo Diesel	DGJ = Transmission-5-Spd. Automatic,W5A580

Under Seat - Relays & Fuses
Figure 8-505

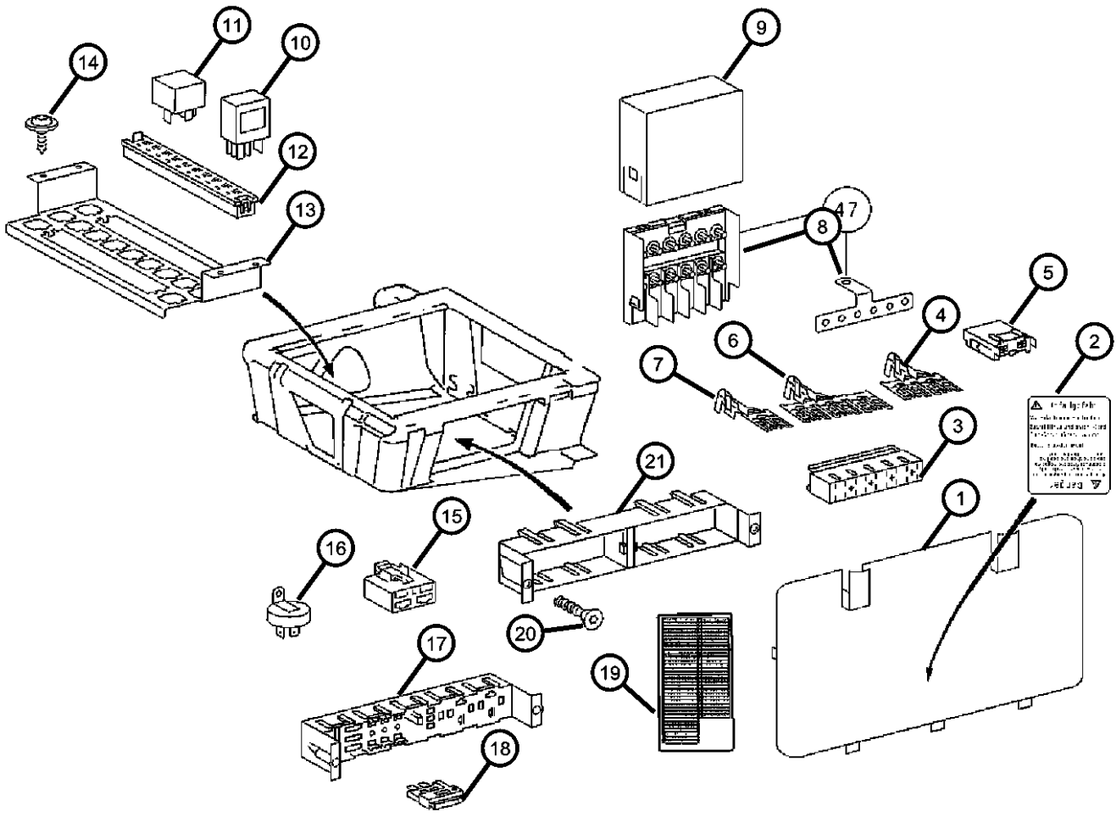

ITEM	PART NUMBER	QTY	LINE	SERIES	BODY	ENGINE	TRANS	TRIM	DESCRIPTION
		1	2, 6	L	51, 52, 54, 55, 56				
		1	3, 7	L	12, 15, 16				
9									COVER, Fuse Access
	05103749AA	1	2, 6	L	06, 01, 02				
		1	2, 6	L	11, 12, 14, 15, 16				
		1	2, 6	L	51, 52, 54, 55, 56				
		1	3, 7	L	12, 15, 16				
10									RELAY
	05103560AA	1	2, 6	L	01, 02, 06				
		1	2, 6	L	51, 52, 54, 55, 56				
		1	2, 6	L	11, 12, 14, 15, 16				
		1	3, 7	L	12, 15, 16				
11									RELAY
	05103551AA	1	2, 6	L	01, 02, 06		DGJ		
		1	2, 6	L	11, 12, 14, 15, 16		DGJ		
		1	2, 6	L	51, 52, 54, 55, 56		DGJ		
		1	3, 7	L	12, 15, 16		DGJ		
12									CONNECTOR
	05120374AA	1	2, 6	L	54, 55, 56, 51, 52				
		1	3, 7	L	12, 15, 16				
		1	2, 6	L	01, 02, 06				
		1	2, 6	L	11, 12, 14, 15, 16				
13									BRACKET, Fuse Block
	05120840AA	1	2, 6	L	01, 02, 06				

SPRINTER (VA)

SERIES	LINE	BODY	ENGINE	TRANSMISSION
L = LOWLINE	3 = HD DODGE 2WD 6 = Lt. Duty DODGE 4WD 2 = Med. Duty DODGE 2WD 7 = Med. Duty DODGE 4WD	55 = Wagon 140" 54 = Wagon 118" 52 = Wagon 140" 51 = Wagon 118" 12 = Van 140" 11 = Van 118" 06 = Front Section 158" 14 = Van 118" 15 = Van 140" 16 = Van 158" 56 = Wagon 158" 01 = Chassis Forward Control 118" 02 = Chassis Forward Control 140"	EX8 = Engine-2.7L I5 Mercedes Turbo Diesel	DGJ = Transmission-5-Spd. Automatic,W5A580

AR = use ase required - = Non illustrrated part

Under Seat - Relays & Fuses
Figure 8-505

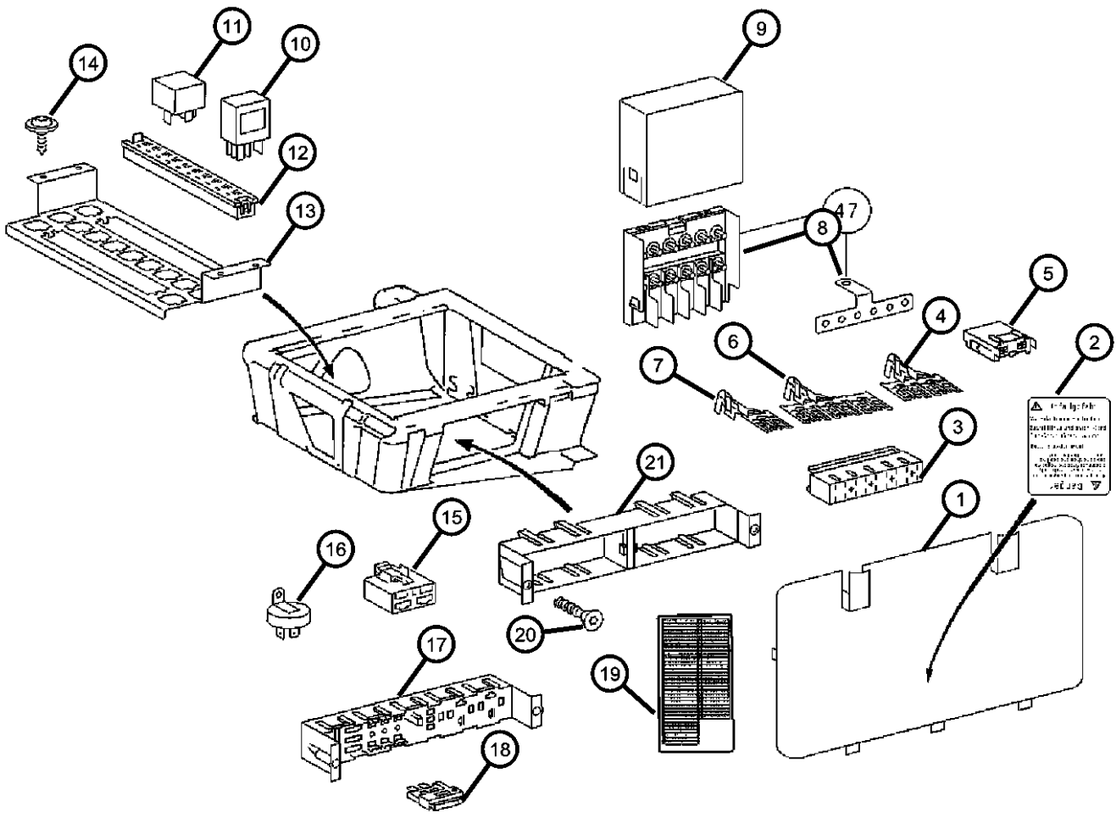

ITEM	PART NUMBER	QTY	LINE	SERIES	BODY	ENGINE	TRANS	TRIM	DESCRIPTION
		1	2, 6	L	11, 12, 14, 15, 16				
		1	2, 6	L	51, 52, 54, 55, 56				
		1	3, 7	L	12, 15, 16				
14									SCREW, Tapping
	06104573AA	2	2, 6	L	01, 02, 06				
		2	2, 6	L	11, 12, 14, 15, 16				
		2	2, 6	L	51, 52, 54, 55, 56				
		2	3, 7	L	12, 15, 16				
15									CONNECTOR
	05120553AA	1	2, 6	L	01, 02, 06				
		1	2, 6	L	11, 12, 14, 15, 16				
		1	2, 6	L	51, 52, 54, 55, 56				
		1	3, 7	L	12, 15, 16				
16									DIODE
	05120186AA	1	2, 6	L	06, 01, 02				
		1	2, 6	L	11, 12, 14, 15, 16				
		1	2, 6	L	51, 52, 54, 55, 56				
		1	3, 7	L	12, 15, 16				
17									BLOCK, Fuse
	05120849AA	1	2, 6	L	01, 02, 06				
		1	2, 6	L	11, 12, 14, 15, 16				
		1	2, 6	L	51, 52, 54, 55, 56				
		1	3, 7	L	12, 15, 16				

SPRINTER (VA)

SERIES	LINE	BODY	ENGINE	TRANSMISSION
L = LOWLINE	3 = HD DODGE 2WD 6 = Lt. Duty DODGE 4WD 2 = Med. Duty DODGE 2WD 7 = Med. Duty DODGE 4WD	55 = Wagon 140" 54 = Wagon 118" 52 = Wagon 140" 51 = Wagon 118" 12 = Van 140" 11 = Van 118" 06 = Front Section 158" 14 = Van 118" 15 = Van 140" 16 = Van 158" 56 = Wagon 158" 01 = Chassis Forward Control 118" 02 = Chassis Forward Control 140"	EX8 = Engine-2.7L I5 Mercedes Turbo Diesel	DGJ = Transmission-5-Spd. Automatic,W5A580

Under Seat - Relays & Fuses
Figure 8-505

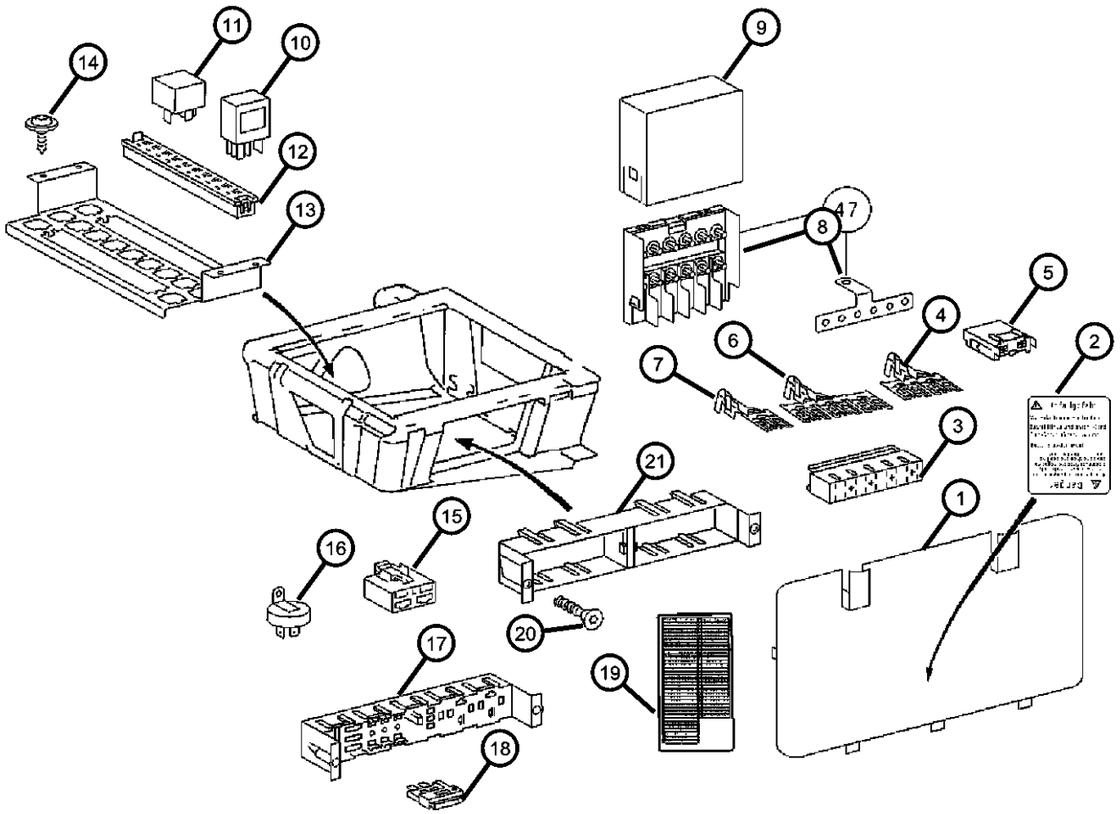

ITEM	PART NUMBER	QTY	LINE	SERIES	BODY	ENGINE	TRANS	TRIM	DESCRIPTION
18									DIODE
	05120963AA	1	2, 6	L	01, 02, 06				
		1	2, 6	L	11, 12, 14, 15, 16				
		1	3, 7	L	12, 15, 16				
		1	2, 6	L	51, 52, 54, 55, 56				
19									LABEL
	05121117AA	1	2, 6	L	01, 02, 06				
		1	2, 6	L	11, 12, 14, 15, 16				
		1	2, 6	L	54, 55, 56, 51, 52				
		1	3, 7	L	12, 15, 16				
20									SCREW, Counter Sunk
	06104654AA	2	2, 6	L	01, 02, 06				
		2	2, 6	L	51, 52, 54, 55, 56				
		2	3, 7	L	12, 15, 16				
		2	2, 6	L	11, 12, 14, 15, 16				
21									CONNECTOR
	05120507AA	1	2, 6	L	11, 12, 14, 15, 16				
		1	2, 6	L	51, 52, 54, 55, 56				
		1	3, 7	L	12, 15, 16				
	05120577AA	1	2, 6	L	01, 02, 06				
-22									FUSE
	05104596AA	1							200 AMP
	05104599AA	1							100 AMP
	05104600AA	1							125 AMP

SPRINTER (VA)

SERIES	LINE	BODY	ENGINE	TRANSMISSION
L = LOWLINE	3 = HD DODGE 2WD 6 = Lt. Duty DODGE 4WD 2 = Med. Duty DODGE 2WD 7 = Med. Duty DODGE 4WD	55 = Wagon 140" 54 = Wagon 118" 52 = Wagon 140" 51 = Wagon 118" 12 = Van 140" 11 = Van 118" 06 = Front Section 158" 14 = Van 118" 15 = Van 140" 16 = Van 158" 56 = Wagon 158" 01 = Chassis Forward Control 118" 02 = Chassis Forward Control 140"	EX8 = Engine-2.7L I5 Mercedes Turbo Diesel	DGJ = Transmission-5-Spd. Automatic,W5A580

Under Seat - Relays & Fuses
Figure 8-505

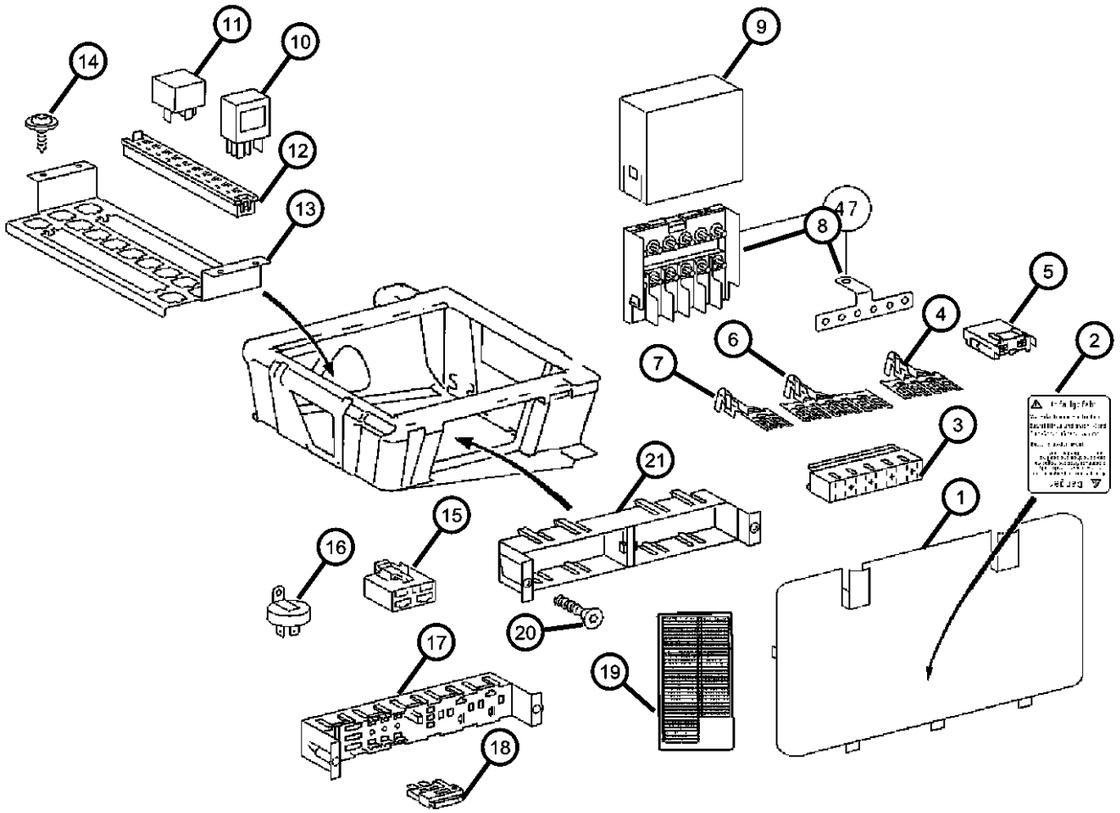

ITEM	PART NUMBER	QTY	LINE	SERIES	BODY	ENGINE	TRANS	TRIM	DESCRIPTION
-23									BRACKET, Fuse Block
	05120844AA	1	2, 6	L	01, 02, 06				
		1	2, 6	L	11, 12, 14, 15, 16				
		1	3, 7	L	02, 06				

SPRINTER (VA)

SERIES	LINE	BODY	ENGINE	TRANSMISSION
L = LOWLINE	3 = HD DODGE 2WD 6 = Lt. Duty DODGE 4WD 2 = Med. Duty DODGE 2WD 7 = Med. Duty DODGE 4WD	55 = Wagon 140" 54 = Wagon 118" 52 = Wagon 140" 51 = Wagon 118" 12 = Van 140" 11 = Van 118" 06 = Front Section 158" 14 = Van 118" 15 = Van 140" 16 = Van 158" 56 = Wagon 158" 01 = Chassis Forward Control 118" 02 = Chassis Forward Control 140"	EX8 = Engine-2.7L I5 Mercedes Turbo Diesel	DGJ = Transmission-5-Spd. Automatic,W5A580

Instrument Panel - Relays & Fuses
Figure 8-510

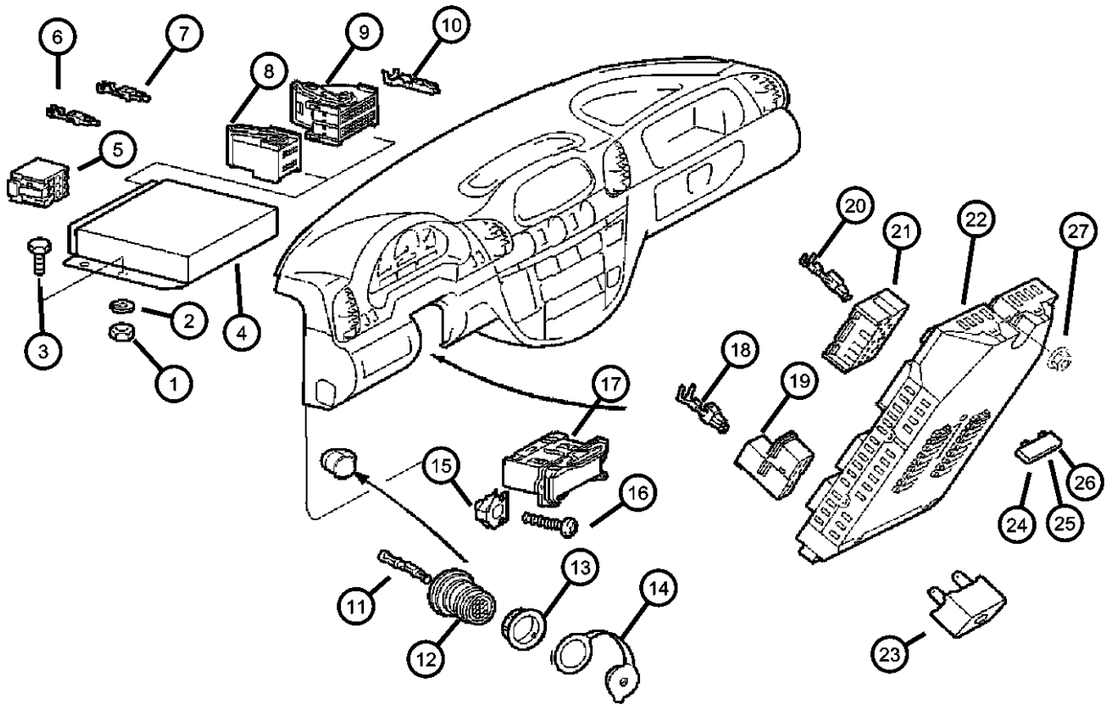

ITEM	PART NUMBER	QTY	LINE	SERIES	BODY	ENGINE	TRANS	TRIM	DESCRIPTION
1									BOLT, M6x20
	05126198AA	4	2, 6	L	01, 02, 06				
		4	2, 6	L	11, 12, 14, 15, 16				
		4	2, 6	L	51, 52, 54, 55, 56				
		4	3, 7	L	12, 15, 16				
2		4							NUT, Hex, (NOT SERVICED)
3									LOCK WASHER
	05126240AA	4	3, 7	L	12, 15, 16				
		4	2, 6	L	01, 02, 06				
		4	2, 6	L	11, 12, 14, 15, 16				
		4	2, 6	L	51, 52, 54, 55, 56				
4									MODULE, Powertrain Control
	05117562AA	1	2, 6	L	01, 02, 06	EX9			
		1	2, 6	L	11, 12, 14, 15, 16	EX9			
		1	2, 6	L	51, 52, 54, 55, 56	EX9			
		1	3, 7	L	16, 12, 15	EX9			
	05117567AA	1	2, 6	L	01, 02, 06	EX9			[NAA]
		1	2, 6	L	11, 12, 14, 15, 16	EX9			[NAA]
		1	2, 6	L	51, 52, 54, 55, 56	EX9			[NAA]
		1	3, 7	L	12, 15, 16	EX9			[NAA]
5									CONNECTOR
	05120752AA	1	2, 6	L	51, 52, 54, 55, 56				
		1	3, 7	L	12, 15, 16				
		1	2, 6	L	01, 02, 06				

SPRINTER (VA)

SERIES	LINE	BODY	ENGINE	TRANSMISSION
L = LOWLINE	3 = HD DODGE 2WD 6 = Lt. Duty DODGE 4WD 2 = Med. Duty DODGE 2WD 7 = Med. Duty DODGE 4WD	55 = Wagon 140" 54 = Wagon 118" 52 = Wagon 140" 51 = Wagon 118" 12 = Van 140" 11 = Van 118" 06 = Front Section 158" 14 = Van 118" 15 = Van 140" 16 = Van 158" 56 = Wagon 158" 01 = Chassis Forward Control 118" 02 = Chassis Forward Control 140"	EX8 = Engine-2.7L I5 Mercedes Turbo Diesel	DGJ = Transmission-5-Spd. Automatic,W5A580

AR = use ase required - = Non illustrrated part

Instrument Panel - Relays & Fuses
Figure 8-510

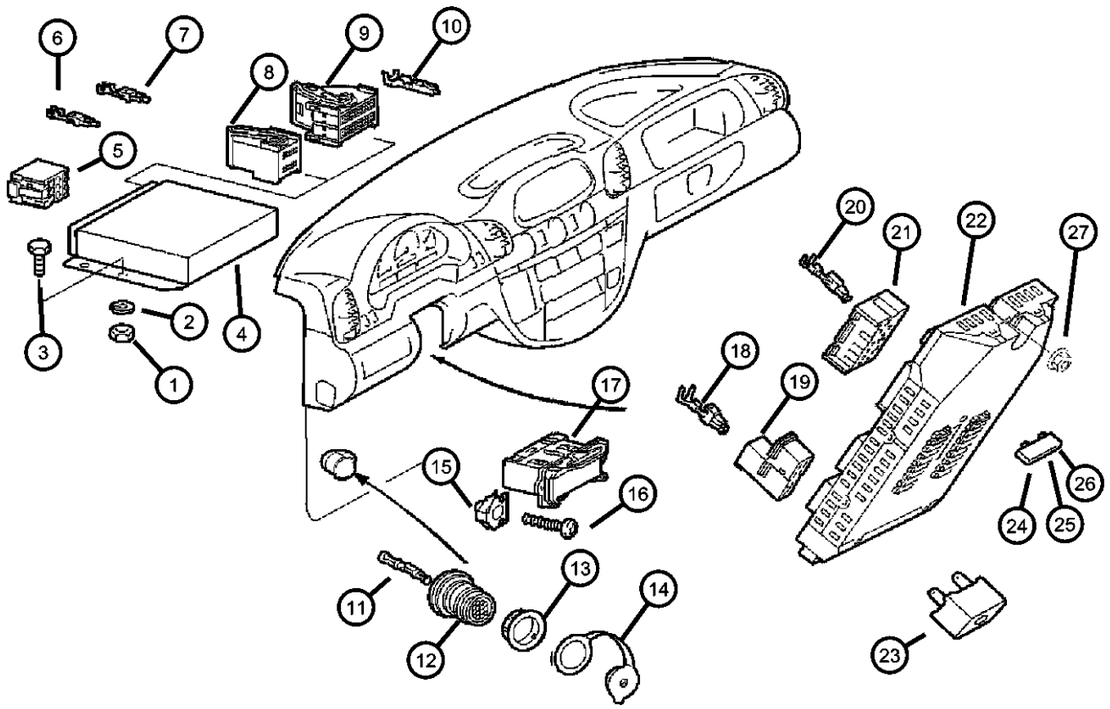

ITEM	PART NUMBER	QTY	LINE	SERIES	BODY	ENGINE	TRANS	TRIM	DESCRIPTION
		1	2, 6	L	11, 12, 14, 15, 16				
6									TERMINAL
	05133372AA	1	2, 6	L	01, 02, 06				
		1	2, 6	L	11, 12, 14, 15, 16				
		1	2, 6	L	51, 52, 54, 55, 56				
		1	3, 7	L	12, 15, 16				
7									TERMINAL
	05103882AA	1	2, 6	L	01, 02, 06				
		1	2, 6	L	16, 11, 12, 14, 15				
		1	2, 6	L	51, 52, 54, 55, 56				
		1	3, 7	L	12, 15, 16				
8									CONNECTOR
	05120753AA	1	2, 6	L	01, 02, 06				
		1	2, 6	L	11, 12, 14, 15, 16				
		1	2, 6	L	51, 52, 54, 55, 56				
		1	3, 7	L	12, 15, 16				
9									CONNECTOR
	05120754AA	1	2, 6	L	01, 02, 06				
		1	2, 6	L	11, 12, 14, 15, 16				
		1	2, 6	L	51, 52, 54, 55, 56				
		1	3, 7	L	12, 15, 16				
10									TERMINAL
	05103874AA	99	2, 6	L	01, 02, 06				

SPRINTER (VA)

SERIES	LINE	BODY	ENGINE	TRANSMISSION
L = LOWLINE	3 = HD DODGE 2WD 6 = Lt. Duty DODGE 4WD 2 = Med. Duty DODGE 2WD 7 = Med. Duty DODGE 4WD	55 = Wagon 140" 54 = Wagon 118" 52 = Wagon 140" 51 = Wagon 118" 12 = Van 140" 11 = Van 118" 06 = Front Section 158" 14 = Van 118" 15 = Van 140" 16 = Van 158" 56 = Wagon 158" 01 = Chassis Forward Control 118" 02 = Chassis Forward Control 140"	EX8 = Engine-2.7L I5 Mercedes Turbo Diesel	DGJ = Transmission-5-Spd. Automatic,W5A580

Instrument Panel - Relays & Fuses
Figure 8-510

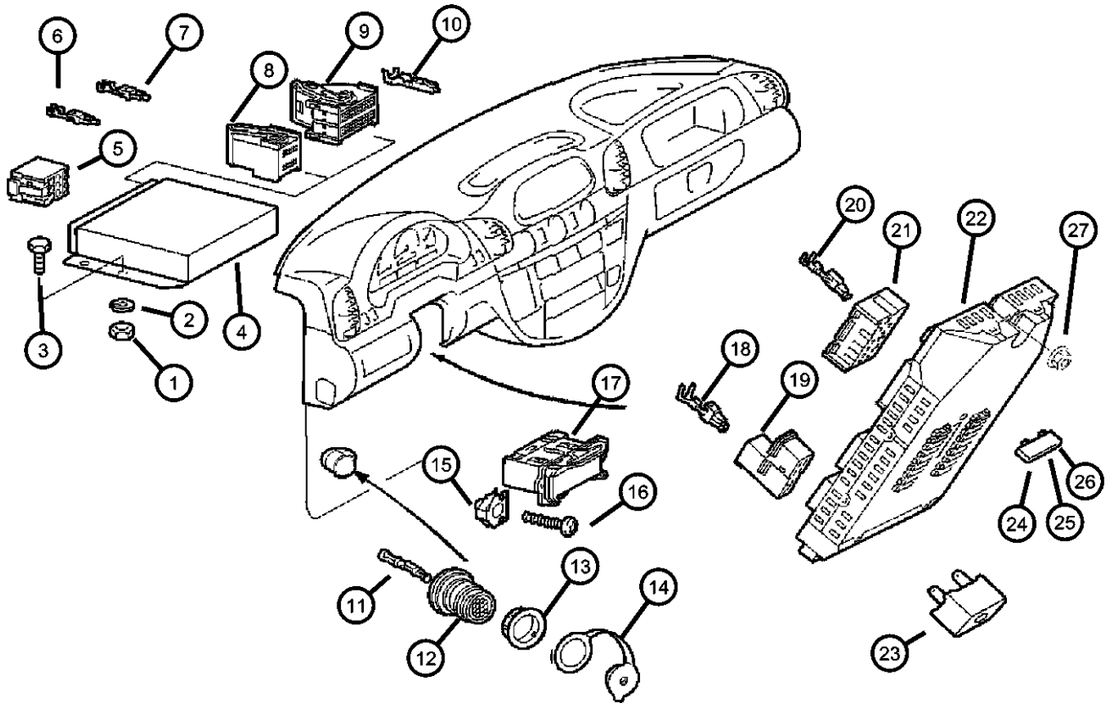

ITEM	PART NUMBER	QTY	LINE	SERIES	BODY	ENGINE	TRANS	TRIM	DESCRIPTION
		99	2, 6	L	11, 12, 14, 15, 16				
		99	2, 6	L	51, 52, 54, 55, 56				
		99	3, 7	L	16, 12, 15				
11									TERMINAL
	05133383AA	1	2, 6	L	01, 02, 06				
	05133383AB	99	2, 6	L	11, 12, 14, 15, 16				
		99	2, 6	L	51, 52, 54, 55, 56				
		1	3, 7	L	12, 15, 16				
12									CONNECTOR
	05120544AA	1	2, 6	L	01, 02, 06				
		1	2, 6	L	11, 12, 14, 15, 16				
		1	3, 7	L	12, 15, 16				
		1	2, 6	L	51, 52, 54, 55, 56				
13									STRAP, Ground
	05120912AA	1	2, 6	L	01, 02, 06				
		1	2, 6	L	11, 12, 14, 15, 16				
		1	2, 6	L	51, 52, 54, 55, 56				
		1	3, 7	L	12, 15, 16				
14									PLUG, Wiring
	05103747AA	1	2, 6	L	01, 02, 06				
		1	2, 6	L	16, 11, 12, 14, 15				
		1	2, 6	L	51, 52, 54, 55, 56				
		1	3, 7	L	12, 15, 16				

SPRINTER (VA)

SERIES	LINE	BODY	ENGINE	TRANSMISSION
L = LOWLINE	3 = HD DODGE 2WD 6 = Lt. Duty DODGE 4WD 2 = Med. Duty DODGE 2WD 7 = Med. Duty DODGE 4WD	55 = Wagon 140" 54 = Wagon 118" 52 = Wagon 140" 51 = Wagon 118" 12 = Van 140" 11 = Van 118" 06 = Front Section 158" 14 = Van 118" 15 = Van 140" 16 = Van 158" 56 = Wagon 158" 01 = Chassis Forward Control 118" 02 = Chassis Forward Control 140"	EX8 = Engine-2.7L I5 Mercedes Turbo Diesel	DGJ = Transmission-5-Spd. Automatic,W5A580

Instrument Panel - Relays & Fuses
Figure 8-510

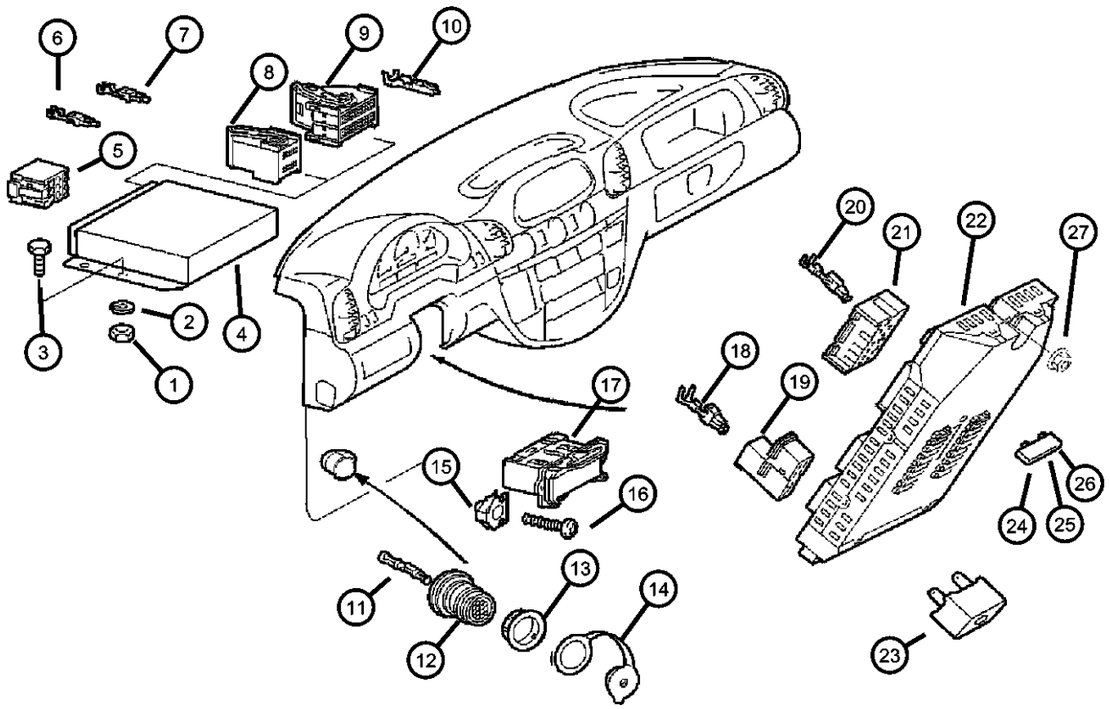

ITEM	PART NUMBER	QTY	LINE	SERIES	BODY	ENGINE	TRANS	TRIM	DESCRIPTION
15									NUT, Spring
	05125861AA	2	2, 6	L	01, 02, 06				
		2	2, 6	L	11, 12, 14, 15, 16				
		2	3, 7	L	12, 15, 16				
		2	2, 6	L	51, 52, 54, 55, 56				
16									SHEET METAL SCREW, NONE, SPRINTER
	06104496AA	2	2, 6	L	01, 02, 06				
		2	2, 6	L	11, 12, 14, 15, 16				
		2	3, 7	L	12, 15, 16				
		2	2, 6	L	51, 52, 54, 55, 56				
17									BRACKET, Diagnostic Module
	05098297AA	1	2, 6	L	01, 02, 06				
		1	2, 6	L	11, 12, 14, 15, 16				
		1	2, 6	L	51, 52, 54, 55, 56				
		1	3, 7	L	16, 12, 15				
18									TERMINAL
	05133372AA	1	2, 6	L	01, 02, 06				
		1	2, 6	L	11, 12, 14, 15, 16				
		1	2, 6	L	51, 52, 54, 55, 56				
		1	3, 7	L	12, 15, 16				
19									CONNECTOR
	05120555AA	1	2, 6	L	11, 12, 14, 15, 16				
		1	2, 6	L	51, 52, 54, 55, 56				

SPRINTER (VA)

SERIES	LINE	BODY	ENGINE	TRANSMISSION
L = LOWLINE	3 = HD DODGE 2WD 6 = Lt. Duty DODGE 4WD 2 = Med. Duty DODGE 2WD 7 = Med. Duty DODGE 4WD	55 = Wagon 140" 54 = Wagon 118" 52 = Wagon 140" 51 = Wagon 118" 12 = Van 140" 11 = Van 118" 06 = Front Section 158" 14 = Van 118" 15 = Van 140" 16 = Van 158" 56 = Wagon 158" 01 = Chassis Forward Control 118" 02 = Chassis Forward Control 140"	EX8 = Engine-2.7L I5 Mercedes Turbo Diesel	DGJ = Transmission-5-Spd. Automatic,W5A580

Instrument Panel - Relays & Fuses
Figure 8-510

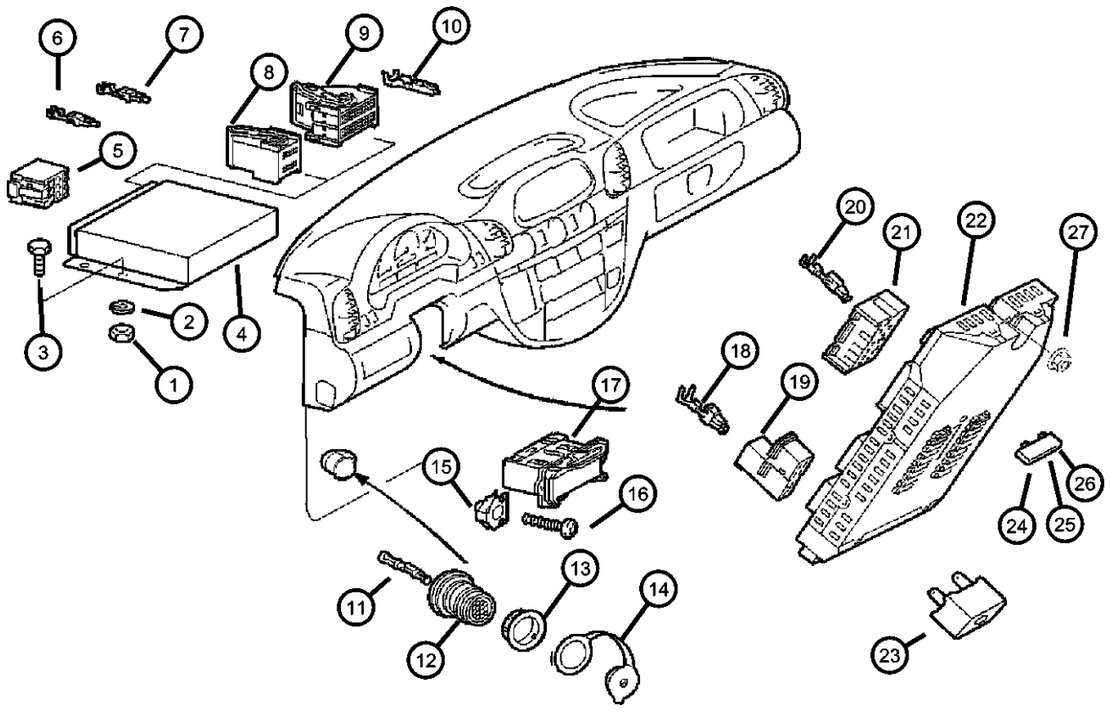

ITEM	PART NUMBER	QTY	LINE	SERIES	BODY	ENGINE	TRANS	TRIM	DESCRIPTION
		1	3, 7	L	12, 15, 16				
		1	2, 6	L	01, 02, 06				
20									TERMINAL
	05103893AA	99	2, 6	L	01, 02, 06				
		99	2, 6	L	11, 12, 14, 15, 16				
		99	2, 6	L	51, 52, 54, 55, 56				
		99	3, 7	L	12, 15, 16				
21									CONNECTOR
	05120646AA	1	3, 7	L	12, 15, 16				
		1	6, 2	L	01, 02, 06				
		1	2, 6	L	16, 11, 12, 14, 15				
		1	2, 6	L	51, 52, 54, 55, 56				
22									BLOCK, Fuse
	05120244AA	1	2, 6	L	01, 02, 06	EX9			
		1	2, 6	L	11, 12, 14, 15, 16	EX9			
		1	2, 6	L	51, 52, 54, 55, 56	EX9			
		1	3, 7	L	12, 15, 16	EX9			
23									BUZZER, REAR FOGLAMP, SPRINTER
	05103746AA	1	2, 6	L	11, 12, 14, 15, 16				
		1	2, 6	L	51, 52, 54, 55, 56				
		1	3, 7	L	12, 15, 16				
24									FUSE, Standard, 10 AMP, Red
	05104643AA	99	3, 7	L	12, 15, 16				
		99	2, 6	L	01, 02, 06				

SPRINTER (VA)

SERIES	LINE	BODY	ENGINE	TRANSMISSION
L = LOWLINE	3 = HD DODGE 2WD 6 = Lt. Duty DODGE 4WD 2 = Med. Duty DODGE 2WD 7 = Med. Duty DODGE 4WD	55 = Wagon 140" 54 = Wagon 118" 52 = Wagon 140" 51 = Wagon 118" 12 = Van 140" 11 = Van 118" 06 = Front Section 158" 14 = Van 118" 15 = Van 140" 16 = Van 158" 56 = Wagon 158" 01 = Chassis Forward Control 118" 02 = Chassis Forward Control 140"	EX8 = Engine-2.7L I5 Mercedes Turbo Diesel	DGJ = Transmission-5-Spd. Automatic,W5A580

Instrument Panel - Relays & Fuses
Figure 8-510

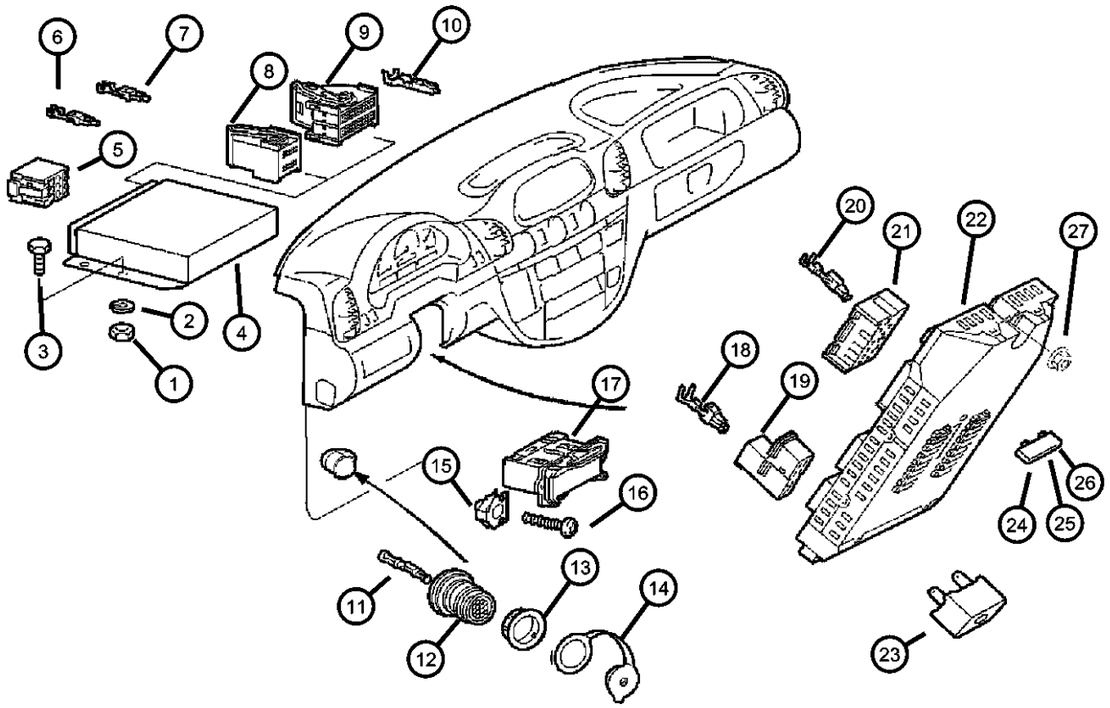

ITEM	PART NUMBER	QTY	LINE	SERIES	BODY	ENGINE	TRANS	TRIM	DESCRIPTION
		99	2, 6	L	11, 12, 14, 15, 16				
		99	2, 6	L	51, 52, 54, 55, 56				
25									FUSE, 20 A, SPRINTER
	05104604AA	1	2, 6	L	06, 01, 02				
		1	2, 6	L	11, 12, 14, 15, 16				
		1	2, 6	L	51, 52, 54, 55, 56				
		1	3, 7	L	12, 15, 16				
26									FUSE, 25 A, SPRINTER
	05104644AA	99	2, 6	L	11, 12, 14, 15, 16				
		99	2, 6	L	51, 52, 54, 55, 56				
		99	3, 7	L	12, 15, 16				
		99	2, 6	L	01, 02, 06				
27									NUT, Hex
	05097674AA	1	2, 6	L	01, 02, 06				
		1	2, 6	L	51, 52, 54, 55, 56				
		1	2, 6	L	11, 12, 14, 15, 16				
		1	3, 7	L	12, 15, 16				

SPRINTER (VA)

SERIES	LINE	BODY	ENGINE	TRANSMISSION
L = LOWLINE	3 = HD DODGE 2WD 6 = Lt. Duty DODGE 4WD 2 = Med. Duty DODGE 2WD 7 = Med. Duty DODGE 4WD	55 = Wagon 140" 54 = Wagon 118" 52 = Wagon 140" 51 = Wagon 118" 12 = Van 140" 11 = Van 118" 06 = Front Section 158" 14 = Van 118" 15 = Van 140" 16 = Van 158" 56 = Wagon 158" 01 = Chassis Forward Control 118" 02 = Chassis Forward Control 140"	EX8 = Engine-2.7L I5 Mercedes Turbo Diesel	DGJ = Transmission-5-Spd. Automatic,W5A580

Sensors Engine
Figure 8-605

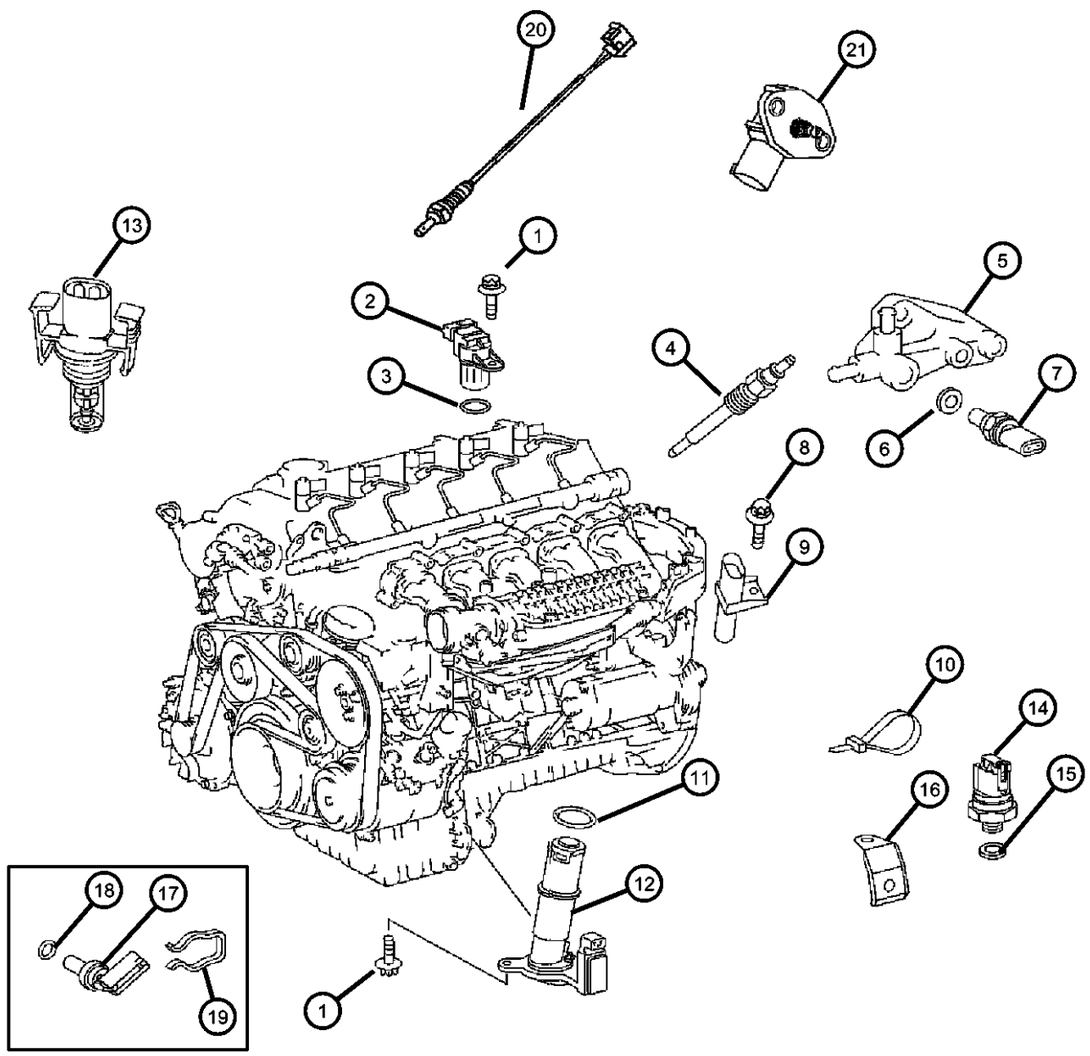

ITEM	PART NUMBER	QTY	LINE	SERIES	BODY	ENGINE	TRANS	TRIM	DESCRIPTION
1	06104682AA	1		L					SCREW
2									SENSOR, Camshaft
	05080346AA	1		L		EX9			
		1		L		EX8			
3									O RING
	05080348AA	1		L		EX9			
		1		L		EX8			
4									PLUG, Glow
	05117592AA	5		L		EX9			
		5		L		EX8			
5	05117425AA	1		L		EX9			BRACKET
6	06507454AA	1		L		EX9			WASHER, Banjo
7	05103534AB	1		L					SENDING UNIT, Temperature Gauge
8	06104076AA	2		L					SCREW
9									SENSOR, Crankshaft
	05080352AA	1		L		EX9			
		1		L		EX8			
10									STRAP, Tie
	05080475AB	1	2, 6	L	11, 12, 14, 15, 16				
		1	2, 6	L	51, 52, 54, 55, 56				
		1	3, 7	L	12, 15, 16				
11									SEAL RING
	05103567AA	1		L		EX9			
		1		L		EX8			
12									SENDING UNIT, Oil Pressure
	05117544AA	1		L		EX8			Oil level
		1		L		EX9			Oil level

SPRINTER (VA)

SERIES	LINE	BODY	ENGINE	TRANSMISSION
L = LOWLINE	3 = HD DODGE 2WD 6 = Lt. Duty DODGE 4WD 2 = Med. Duty DODGE 2WD 7 = Med. Duty DODGE 4WD	55 = Wagon 140" 54 = Wagon 118" 52 = Wagon 140" 51 = Wagon 118" 12 = Van 140" 11 = Van 118" 06 = Front Section 158" 14 = Van 118" 15 = Van 140" 16 = Van 158" 56 = Wagon 158" 01 = Chassis Forward Control 118" 02 = Chassis Forward Control 140"	EX8 = Engine-2.7L I5 Mercedes Turbo Diesel	DGJ = Transmission-5-Spd. Automatic,W5A580

AR = use ase required - = Non illustrrated part

Sensors Engine
Figure 8-605

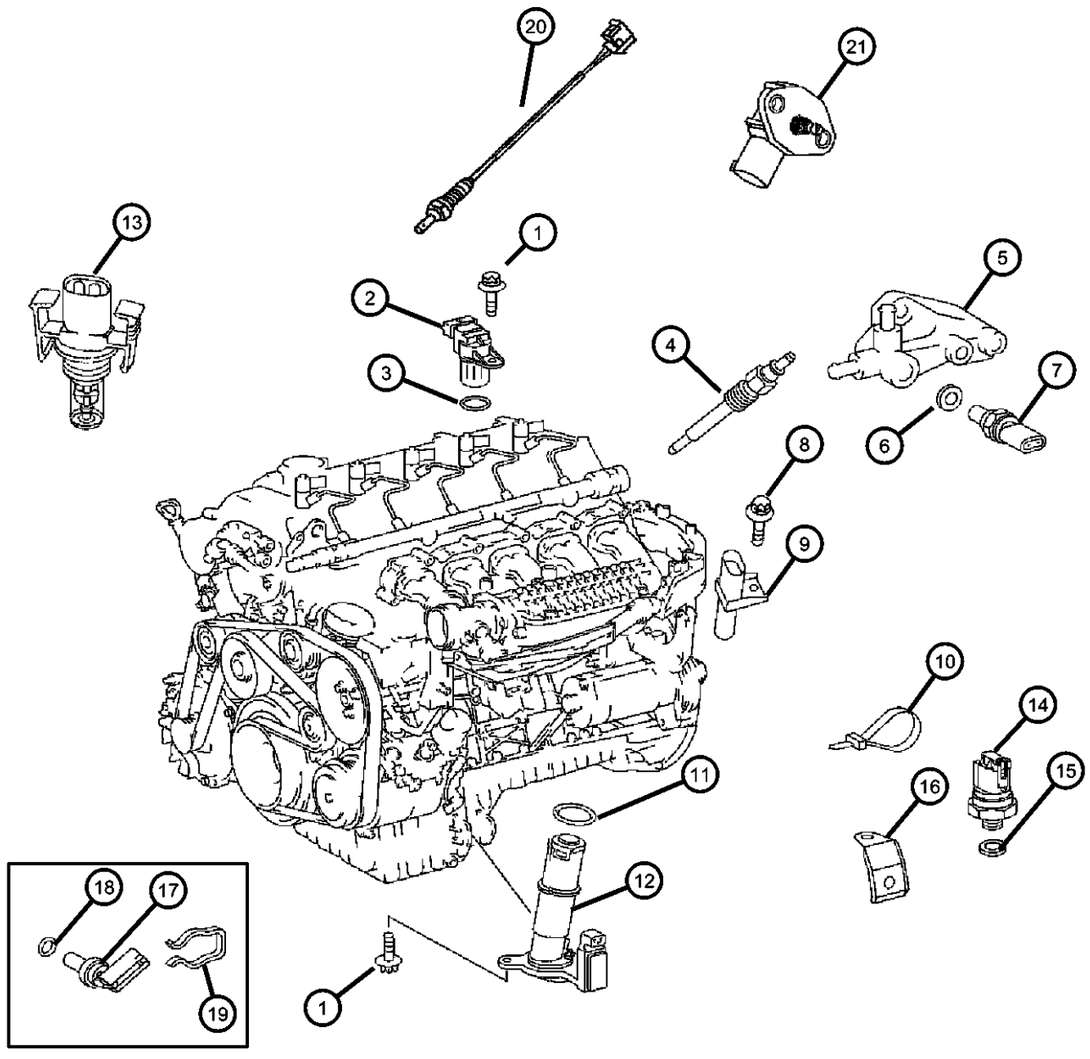

ITEM	PART NUMBER	QTY	LINE	SERIES	BODY	ENGINE	TRANS	TRIM	DESCRIPTION
13									SENSOR, Temperature
	05174042AA	1	2, 6	L	01, 02, 06	EX8			Air Intake Temperture
		1	2, 6	L	11, 12, 14, 15, 16	EX8			Air Intake Temperture
		1	2, 6	L	51, 52, 54, 55, 56	EX8			Air Intake Temperture
		1	3, 7	L	02, 06	EX8			Air Intake Temperture
		1	3, 7	L	12, 15, 16	EX8			Air Intake Temperture
14	05103558AA	1		L		EX9			SENSOR, Fuel Pressure, Low pressure
15									WASHER
	05104638AA	99	2, 6	L	51, 52, 54, 55, 56				
		2	3, 7	L	12, 15, 16	EX9			
		2	3, 7	L	02, 06	EX9			
		99	2, 6	L	11, 12, 14, 15, 16				
16	05096466AA	1		L					BRACKET, Wiring
17	05080147AA	1		L		EX9			SENDING UNIT, Temperature Gauge
18	05080148AA	1		L		EX9			O RING
19	05080149AA	1		L		EX9			CLIP
20									SENSOR, Oxygen
	05135667AA	1	2, 6	L	01, 02, 06	EX8			
		1	3, 7	L	02, 06	EX8			
		1	2, 6	L	11, 12, 14, 15, 16	EX8			
		1	2, 6	L	51, 52, 54, 55, 56	EX8			
		1	3, 7	L	12, 15, 16	EX8			
21									SENSOR, MAP
	05117545AA	1	2, 6	L	01, 02, 06	EX8			

SPRINTER (VA)

SERIES	LINE	BODY	ENGINE	TRANSMISSION
L = LOWLINE	3 = HD DODGE 2WD 6 = Lt. Duty DODGE 4WD 2 = Med. Duty DODGE 2WD 7 = Med. Duty DODGE 4WD	55 = Wagon 140" 54 = Wagon 118" 52 = Wagon 140" 51 = Wagon 118" 12 = Van 140" 11 = Van 118" 06 = Front Section 158" 14 = Van 118" 15 = Van 140" 16 = Van 158" 56 = Wagon 158" 01 = Chassis Forward Control 118" 02 = Chassis Forward Control 140"	EX8 = Engine-2.7L I5 Mercedes Turbo Diesel	DGJ = Transmission-5-Spd. Automatic,W5A580

Sensors Engine
Figure 8-605

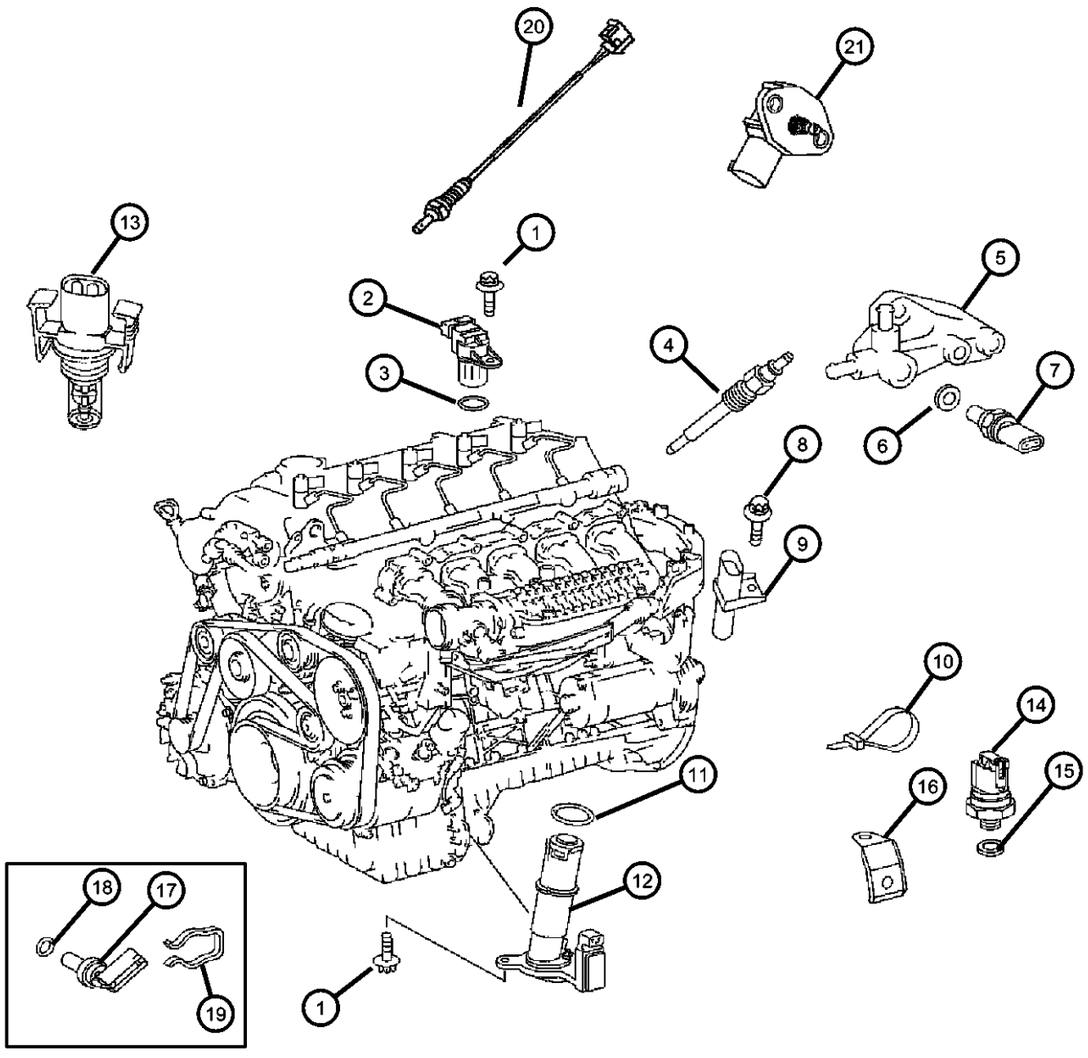

ITEM	PART NUMBER	QTY	LINE	SERIES	BODY	ENGINE	TRANS	TRIM	DESCRIPTION
		1	2, 6	L	11, 12, 14, 15, 16	EX8			
		1	3, 7	L	12, 15, 16	EX8			
		1	2, 6	L	51, 52, 54, 55, 56	EX8			
		1	3, 7	L	02, 06	EX8			
-22	05117542AA	1		L		EX8			SENSOR, Fuel/Water

SPRINTER (VA)

SERIES	LINE	BODY	ENGINE	TRANSMISSION
L = LOWLINE	3 = HD DODGE 2WD 6 = Lt. Duty DODGE 4WD 2 = Med. Duty DODGE 2WD 7 = Med. Duty DODGE 4WD	55 = Wagon 140" 54 = Wagon 118" 52 = Wagon 140" 51 = Wagon 118" 12 = Van 140" 11 = Van 118" 06 = Front Section 158" 14 = Van 118" 15 = Van 140" 16 = Van 158" 56 = Wagon 158" 01 = Chassis Forward Control 118" 02 = Chassis Forward Control 140"	EX8 = Engine-2.7L I5 Mercedes Turbo Diesel	DGJ = Transmission-5-Spd. Automatic,W5A580

AR = use ase required - = Non illustrrated part

Sensors - Drivetrain
Figure 8-610

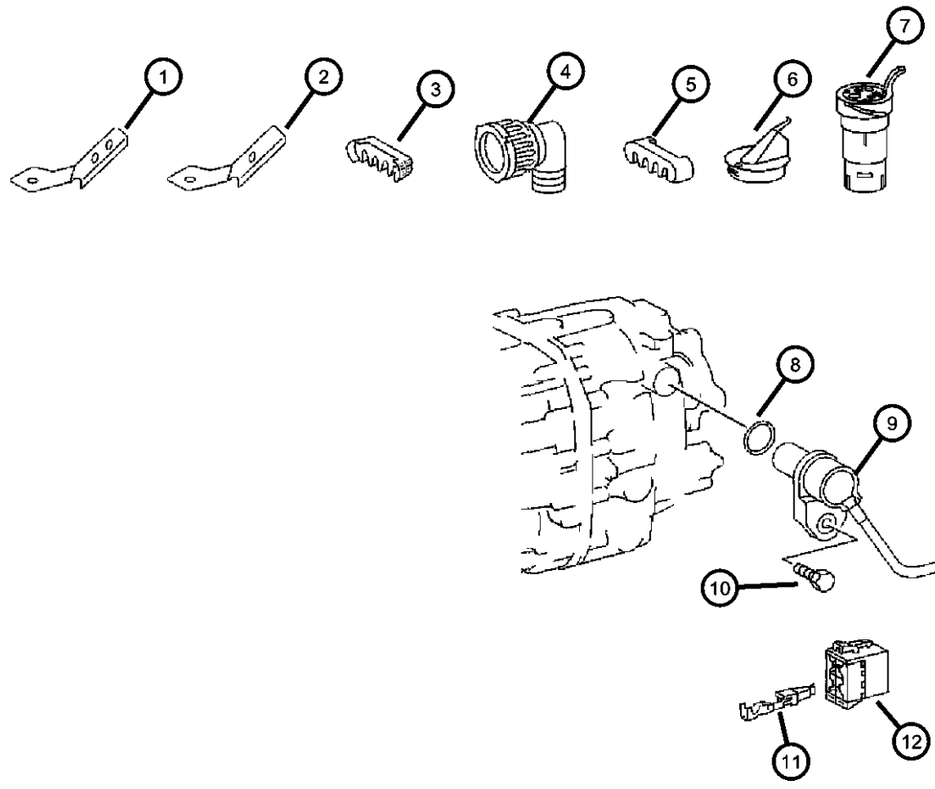

ITEM	PART NUMBER	QTY	LINE	SERIES	BODY	ENGINE	TRANS	TRIM	DESCRIPTION
1									BRACKET
	05120944AA	1	2, 6	L	11, 12, 14, 15, 16	EX9			
		1	2, 6	L	51, 52, 54, 55, 56	EX9			
		1	3, 7	L	12, 15, 16	EX9			
2									BRACKET
	05120947AA	1	2, 6	L	11, 12, 14, 15, 16	EX9			
		1	2, 6	L	51, 52, 54, 55, 56	EX9			
		1	3, 7	L	12, 15, 16	EX9			
3									RETAINER, Wiring Harness
	05120852AA	1	2, 6	L	11, 12, 14, 15, 16				
		1	2, 6	L	51, 52, 54, 55, 56				
		1	3, 7	L	12, 15, 16				
4									BOOT, BOOT
	05120915AA	1	2, 6	L	11, 12, 14, 15, 16				
		1	2, 6	L	51, 52, 54, 55, 56				
		1	3, 7	L	12, 15, 16				
5									RETAINER, Wiring Harness
	05120883AA	1	2, 6	L	11, 12, 14, 15, 16				
		1	2, 6	L	51, 52, 54, 55, 56				
		1	3, 7	L	12, 15, 16				
6									CAP
	05120884AA	1	2, 6	L	11, 12, 14, 15, 16				
		1	2, 6	L	51, 52, 54, 55, 56				

SPRINTER (VA)

SERIES	LINE	BODY	ENGINE	TRANSMISSION
L = LOWLINE	3 = HD DODGE 2WD 6 = Lt. Duty DODGE 4WD 2 = Med. Duty DODGE 2WD 7 = Med. Duty DODGE 4WD	55 = Wagon 140" 54 = Wagon 118" 52 = Wagon 140" 51 = Wagon 118" 12 = Van 140" 11 = Van 118" 06 = Front Section 158" 14 = Van 118" 15 = Van 140" 16 = Van 158" 56 = Wagon 158" 01 = Chassis Forward Control 118" 02 = Chassis Forward Control 140"	EX8 = Engine-2.7L I5 Mercedes Turbo Diesel	DGJ = Transmission-5-Spd. Automatic,W5A580

Sensors - Drivetrain
Figure 8-610

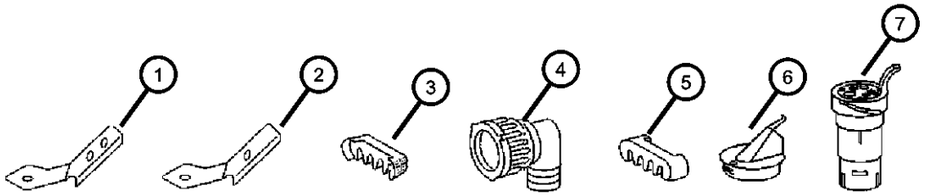

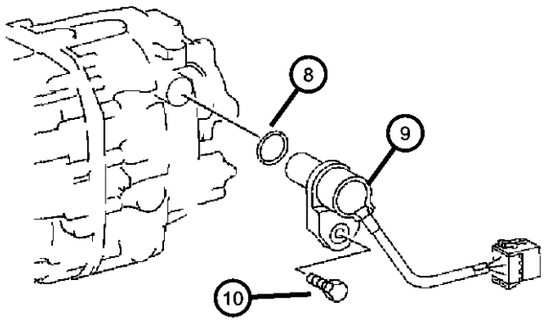

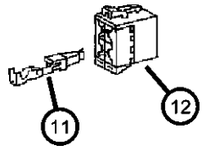

ITEM	PART NUMBER	QTY	LINE	SERIES	BODY	ENGINE	TRANS	TRIM	DESCRIPTION
		1	3, 7	L	12, 15, 16				
7									CONNECTOR
	05120265AA	1	2, 6	L	11, 12, 14, 15, 16				
		1	2, 6	L	51, 52, 54, 55, 56				
		1	3, 7	L	12, 15, 16				
8	05125908AA	1		L					O RING, Sensor
9									SENSOR, Vehicle Speed
	05120309AA	1	2, 6	L	11, 12, 14, 15, 16				Tach Pulse Sender
		1	2, 6	L	51, 52, 54, 55, 56				Tach Pulse Sender
		1	3, 7	L	12, 15, 16				Tach Pulse Sender
	05120316AA	1	2, 6	L	11, 12, 14, 15, 16				All Wheel Drive
		1	2, 6	L	51, 52, 54, 55, 56				All Wheel Drive
		1	3, 7	L	12, 15, 16				All Wheel Drive
	05120317AA	1	2, 6	L	11, 12, 14, 15, 16				Auto Trans
		1	2, 6	L	51, 52, 54, 55, 56				Auto Trans
		1	3, 7	L	12, 15, 16				Auto Trans
10									SCREW
	05126234AA	1	2, 6	L	11, 12, 14, 15, 16				
		1	2, 6	L	51, 52, 54, 55, 56				
		1	3, 7	L	12, 15, 16				
11									TERMINAL
	05103877AA	99	2, 6	L	11, 12, 14, 15, 16				
		99	2, 6	L	51, 52, 54, 55, 56				

SPRINTER (VA)

SERIES	LINE	BODY	ENGINE	TRANSMISSION
L = LOWLINE	3 = HD DODGE 2WD 6 = Lt. Duty DODGE 4WD 2 = Med. Duty DODGE 2WD 7 = Med. Duty DODGE 4WD	55 = Wagon 140" 54 = Wagon 118" 52 = Wagon 140" 51 = Wagon 118" 12 = Van 140" 11 = Van 118" 06 = Front Section 158" 14 = Van 118" 15 = Van 140" 16 = Van 158" 56 = Wagon 158" 01 = Chassis Forward Control 118" 02 = Chassis Forward Control 140"	EX8 = Engine-2.7L I5 Mercedes Turbo Diesel	DGJ = Transmission-5-Spd. Automatic,W5A580

Sensors - Drivetrain
Figure 8-610

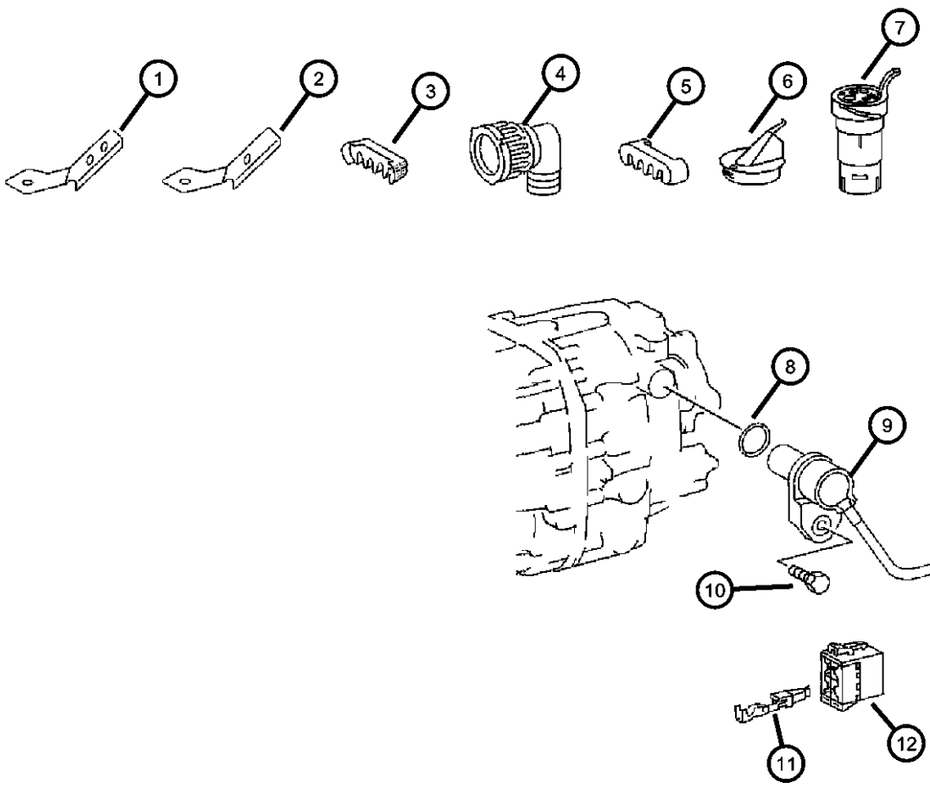

ITEM	PART NUMBER	QTY	LINE	SERIES	BODY	ENGINE	TRANS	TRIM	DESCRIPTION
		99	3, 7	L	12, 15, 16				
12									CONNECTOR
	05103931AA	1	2, 6	L	11, 12, 14, 15, 16				
		1	2, 6	L	51, 52, 54, 55, 56				
		1	3, 7	L	12, 15, 16				
-13									SENSOR, Acceleration
	05120342AA	1	2, 6	L	01, 02, 06				ESP, Lateral Acceleration, Yaw
		1	2, 6	L	11, 12, 14, 15, 16				ESP, Lateral Acceleration, Yaw
		1	2, 6	L	51, 52, 54, 55, 56				ESP, Lateral Acceleration, Yaw
		1	3, 7	L	02, 06				ESP, Lateral Acceleration, Yaw
		1	3, 7	L	12, 15, 16				ESP, Lateral Acceleration, Yaw

SPRINTER (VA)

SERIES	LINE	BODY	ENGINE	TRANSMISSION
L = LOWLINE	3 = HD DODGE 2WD 6 = Lt. Duty DODGE 4WD 2 = Med. Duty DODGE 2WD 7 = Med. Duty DODGE 4WD	55 = Wagon 140" 54 = Wagon 118" 52 = Wagon 140" 51 = Wagon 118" 12 = Van 140" 11 = Van 118" 06 = Front Section 158" 14 = Van 118" 15 = Van 140" 16 = Van 158" 56 = Wagon 158" 01 = Chassis Forward Control 118" 02 = Chassis Forward Control 140"	EX8 = Engine-2.7L I5 Mercedes Turbo Diesel	DGJ = Transmission-5-Spd. Automatic,W5A580

Sensors - Brakes
Figure 8-615

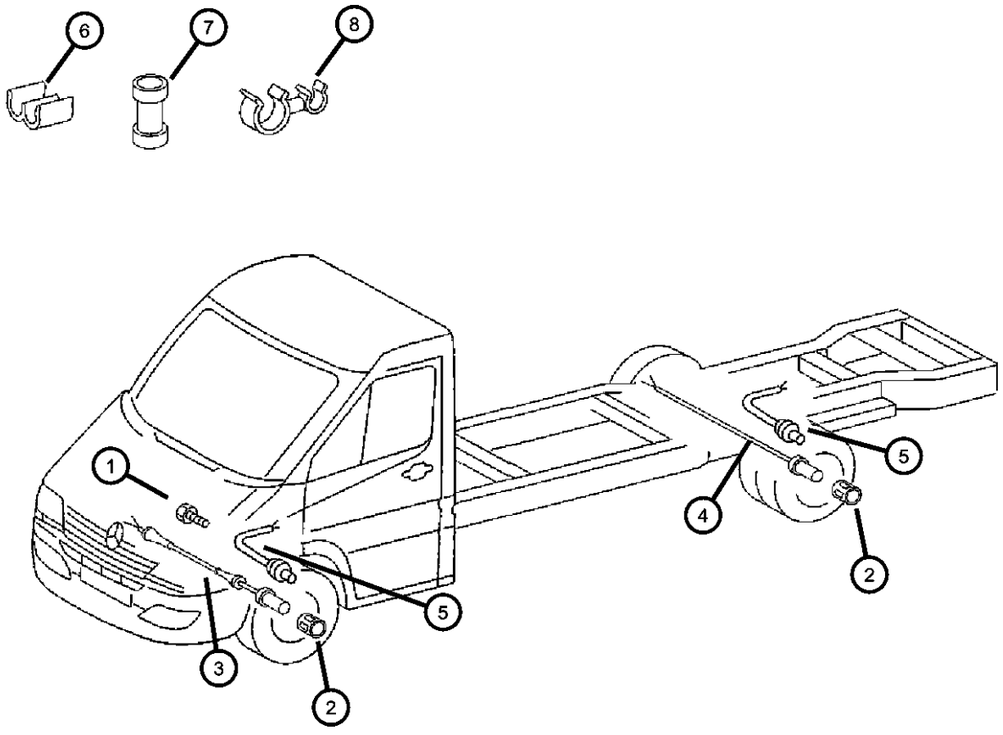

ITEM	PART NUMBER	QTY	LINE	SERIES	BODY	ENGINE	TRANS	TRIM	DESCRIPTION
1									SCREW
	05126269AB	2	2, 6	L	11, 12, 14, 15, 16				
		2	2, 6	L	51, 52, 54, 55, 56				
		2	3, 7	L	12, 15, 16				
2									RETAINER
	05120376AA	2	2, 6	L	11, 12, 14, 15, 16				
		2	2, 6	L	51, 52, 54, 55, 56				
		2	3, 7	L	12, 15, 16				
3									SENSOR, Wheel Speed
	05104145AA	2	2, 6	L	11, 12, 14, 15, 16				When ordering must also order 2 of 05120376AA, 1 of 5103755AA, and 1 of 05103801AA
		2	2, 6	L	51, 52, 54, 55, 56				When ordering must also order 2 of 05120376AA, 1 of 5103755AA, and 1 of 05103801AA
		2	3, 7	L	12, 15, 16				When ordering must also order 2 of 05120376AA, 1 of 5103755AA, and 1 of 05103801AA
4									SENSOR, Wheel Speed
	05104144AA	2	2, 6	L	11, 12, 14, 15, 16				When ordering must also order 2 of 05120376AA, 1 of 5103755AA, and 1 of 05103801AA
		2	2, 6	L	51, 52, 54, 55, 56				When ordering must also order 2 of 05120376AA, 1 of 5103755AA, and 1 of 05103801AA
		2	3, 7	L	12, 15, 16				When ordering must also order 2 of 05120376AA, 1 of 5103755AA, and 1 of 05103801AA
5									WIRING, Brake Indicator
	05103654AA	1	2, 6	L	11, 12, 14, 15, 16				When ordering must also order 2 of 05103755AA and 1 of 05103801AA

SPRINTER (VA)

SERIES	LINE	BODY	ENGINE	TRANSMISSION
L = LOWLINE	3 = HD DODGE 2WD 6 = Lt. Duty DODGE 4WD 2 = Med. Duty DODGE 2WD 7 = Med. Duty DODGE 4WD	55 = Wagon 140" 54 = Wagon 118" 52 = Wagon 140" 51 = Wagon 118" 12 = Van 140" 11 = Van 118" 06 = Front Section 158" 14 = Van 118" 15 = Van 140" 16 = Van 158" 56 = Wagon 158" 01 = Chassis Forward Control 118" 02 = Chassis Forward Control 140"	EX8 = Engine-2.7L I5 Mercedes Turbo Diesel	DGJ = Transmission-5-Spd. Automatic,W5A580

Sensors - Brakes
Figure 8-615

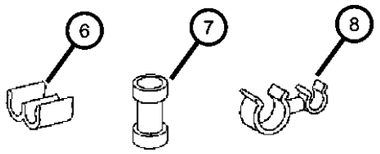

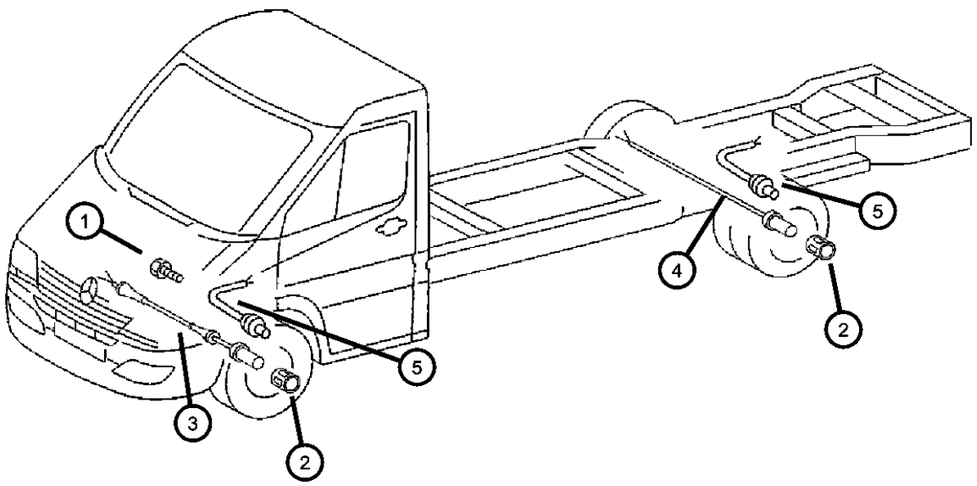

ITEM	PART NUMBER	QTY	LINE	SERIES	BODY	ENGINE	TRANS	TRIM	DESCRIPTION
		1	2, 6	L	51, 52, 54, 55, 56				When ordering must also order 2 of 05103755AA and 1 of 05103801AA
		1	3, 7	L	12, 15, 16				When ordering must also order 2 of 05103755AA and 1 of 05103801AA
6									CLIP, Wiring
	05126024AA	2	2, 6	L	11, 12, 14, 15, 16				
		2	2, 6	L	51, 52, 54, 55, 56				
		2	3, 7	L	12, 15, 16				
7									CONNECTOR
	05103755AA	99	2, 6	L	11, 12, 14, 15, 16				
		99	2, 6	L	51, 52, 54, 55, 56				
		99	3, 7	L	12, 15, 16				
8									BRACKET
	05120943AA	6	2, 6	L	11, 12, 14, 15, 16				
		6	2, 6	L	51, 52, 54, 55, 56				
		6	3, 7	L	12, 15, 16				

SPRINTER (VA)

SERIES	LINE	BODY	ENGINE	TRANSMISSION
L = LOWLINE	3 = HD DODGE 2WD 6 = Lt. Duty DODGE 4WD 2 = Med. Duty DODGE 2WD 7 = Med. Duty DODGE 4WD	55 = Wagon 140" 54 = Wagon 118" 52 = Wagon 140" 51 = Wagon 118" 12 = Van 140" 11 = Van 118" 06 = Front Section 158" 14 = Van 118" 15 = Van 140" 16 = Van 158" 56 = Wagon 158" 01 = Chassis Forward Control 118" 02 = Chassis Forward Control 140"	EX8 = Engine-2.7L I5 Mercedes Turbo Diesel	DGJ = Transmission-5-Spd. Automatic,W5A580

Sensor Ambient Temperature
Figure 8-620

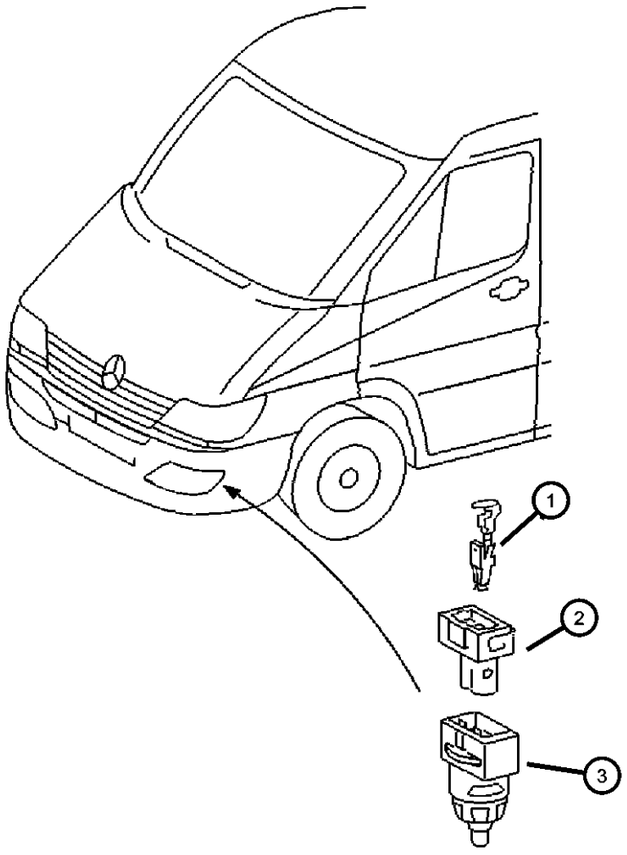

ITEM	PART NUMBER	QTY	LINE	SERIES	BODY	ENGINE	TRANS	TRIM	DESCRIPTION
1									TERMINAL
	05103880AA	99	2, 6	L	11, 12, 14, 15, 16				
		99	2, 6	L	51, 52, 54, 55, 56				
		99	3, 7	L	12, 15, 16				
2									CONNECTOR
	05120749AA	1	2, 6	L	11, 12, 14, 15, 16				
		1	2, 6	L	51, 52, 54, 55, 56				
		1	3, 7	L	12, 15, 16				
3									SENSOR, Ambient Temperature
	05103563AA	1	2, 6	L	11, 12, 14, 15, 16				
		1	2, 6	L	51, 52, 54, 55, 56				
		1	2, 6	L	01, 02, 06				
		1	3, 7	L	02, 06				
		1	3, 7	L	12, 15, 16				

SPRINTER (VA)

SERIES	LINE	BODY	ENGINE	TRANSMISSION
L = LOWLINE	3 = HD DODGE 2WD 6 = Lt. Duty DODGE 4WD 2 = Med. Duty DODGE 2WD 7 = Med. Duty DODGE 4WD	55 = Wagon 140" 54 = Wagon 118" 52 = Wagon 140" 51 = Wagon 118" 12 = Van 140" 11 = Van 118" 06 = Front Section 158" 14 = Van 118" 15 = Van 140" 16 = Van 158" 56 = Wagon 158" 01 = Chassis Forward Control 118" 02 = Chassis Forward Control 140"	EX8 = Engine-2.7L I5 Mercedes Turbo Diesel	DGJ = Transmission-5-Spd. Automatic,W5A580

Single Board Engine Controller (S.B.E.C.)
Figure 8-715

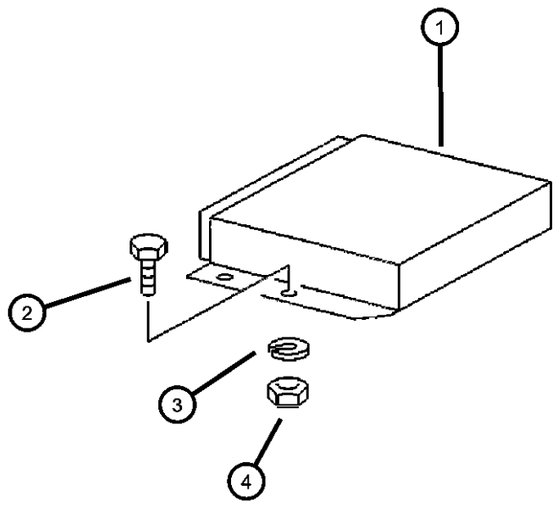

ITEM	PART NUMBER	QTY	LINE	SERIES	BODY	ENGINE	TRANS	TRIM	DESCRIPTION
DG0=All Speed Automatic Transmission DGG=3 Speed Automatic Transmission DGT=4 Speed Automatic Transmission EH0=3.9L Engine ELF=5.2L SMPI 'MAGNUM' Engine ELN=5.2L MPI CNG Engine EM0=5.9L Engine									
1									MODULE, Powertrain Control
	05137615AA	1		L					[NAA]
	05142780AA	1	2, 6	L	01, 02, 06	EX8			[NAS]
		1	2, 6	L	11, 12, 14, 15, 16	EX8			[NAS]
		1	2, 6	L	51, 52, 54, 55, 56	EX8			[NAS]
		1	3, 7	L	02, 06	EX8			[NAS]
		1	3, 7	L	12, 15, 16	EX8			[NAS]
2									BOLT, M6x20
	05126198AA	4	2, 6	L	11, 12, 14, 15, 16				
		4	2, 6	L	51, 52, 54, 55, 56				
		4	3, 7	L	12, 15, 16				
3									LOCK WASHER
	05126240AA	4	2, 6	L	11, 12, 14, 15, 16				
		4	2, 6	L	51, 52, 54, 55, 56				
		4	3, 7	L	12, 15, 16				
4		4							NUT, Hex, (NOT SERVICED)

SPRINTER (VA)

SERIES	LINE	BODY	ENGINE	TRANSMISSION
L = LOWLINE	3 = HD DODGE 2WD 6 = Lt. Duty DODGE 4WD 2 = Med. Duty DODGE 2WD 7 = Med. Duty DODGE 4WD	55 = Wagon 140" 54 = Wagon 118" 52 = Wagon 140" 51 = Wagon 118" 12 = Van 140" 11 = Van 118" 06 = Front Section 158" 14 = Van 118" 15 = Van 140" 16 = Van 158" 56 = Wagon 158" 01 = Chassis Forward Control 118" 02 = Chassis Forward Control 140"	EX8 = Engine-2.7L I5 Mercedes Turbo Diesel	DGJ = Transmission-5-Spd. Automatic,W5A580

Switches - Instrument Panel
Figure 8-805

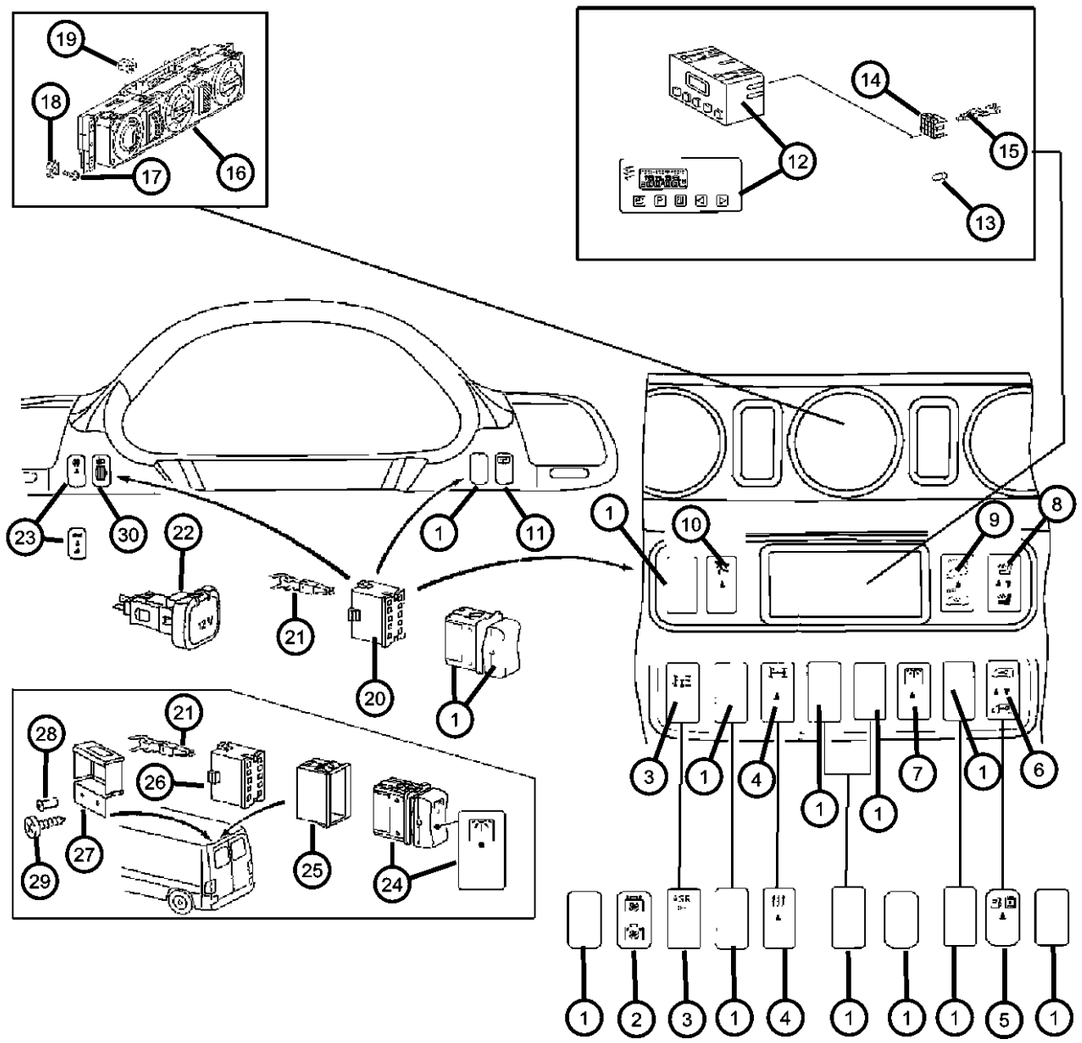

ITEM	PART NUMBER	QTY	LINE	SERIES	BODY	ENGINE	TRANS	TRIM	DESCRIPTION
1									COVER, Switch Opening
	05122925AA	3	2, 6	L	11, 12, 14, 15, 16				
		3	2, 6	L	51, 52, 54, 55, 56				
	05122922AA	1	2, 6	L	01, 02, 06				
		3	3, 7	L	12, 15, 16				
2									SWITCH, Ventilator
	05120490AA	1	2, 6	L	11, 12, 14, 15, 16				
		1	2, 6	L	51, 52, 54, 55, 56				
		1	3, 7	L	12, 15, 16				
3									SWITCH, Traction Control
	05120472AA	1	2, 6	L	51, 52, 54, 55, 56				
		1	3, 7	L	12, 15, 16				
		1	2, 6	L	01, 02, 06				
		1	2, 6	L	11, 12, 14, 15, 16				
4									SWITCH, Rear Blower
	05103853AA	1	2, 6	L	01, 02, 06				
		1	2, 6	L	11, 12, 14, 15, 16				
		1	2, 6	L	51, 52, 54, 55, 56				
		1	3, 7	L	12, 15, 16				
5									SWITCH, Wiper and Washer
	05124392AA	1	2, 6	L	01, 02, 06				
		1	2, 6	L	11, 12, 14, 15, 16				
		1	2, 6	L	51, 52, 54, 55, 56				
		1	3, 7	L	12, 15, 16				

SPRINTER (VA)

SERIES	LINE	BODY	ENGINE	TRANSMISSION
L = LOWLINE	3 = HD DODGE 2WD 6 = Lt. Duty DODGE 4WD 2 = Med. Duty DODGE 2WD 7 = Med. Duty DODGE 4WD	55 = Wagon 140" 54 = Wagon 118" 52 = Wagon 140" 51 = Wagon 118" 12 = Van 140" 11 = Van 118" 06 = Front Section 158" 14 = Van 118" 15 = Van 140" 16 = Van 158" 56 = Wagon 158" 01 = Chassis Forward Control 118" 02 = Chassis Forward Control 140"	EX8 = Engine-2.7L I5 Mercedes Turbo Diesel	DGJ = Transmission-5-Spd. Automatic,W5A580

AR = use ase required - = Non illustrrated part

Switches - Instrument Panel
Figure 8-805

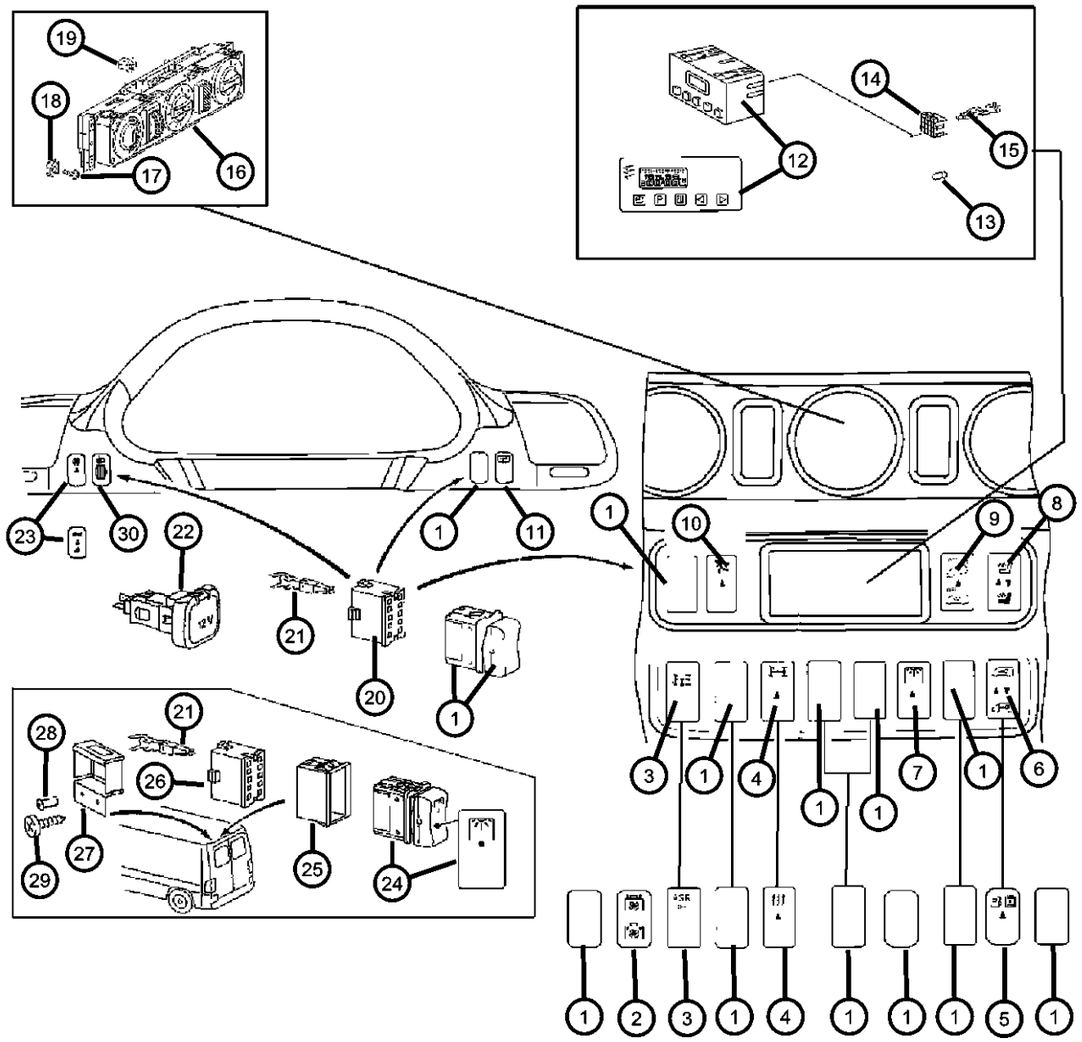

ITEM	PART NUMBER	QTY	LINE	SERIES	BODY	ENGINE	TRANS	TRIM	DESCRIPTION
6									SWITCH, Central Locking
	05103855AA	1	2, 6	L	11, 12, 14, 15, 16				
		1	2, 6	L	01, 02, 06				
		1	2, 6	L	51, 52, 54, 55, 56				
		1	3, 7	L	12, 15, 16				
7									SWITCH, Cargo Lamp
	05103854AA	1	2, 6	L	11, 12, 14, 15, 16				
		1	3, 7	L	12, 15, 16				
	05120450AA	1	2, 6	L	01, 02, 06				
8									SWITCH, Heated Seat
	05120444AA	2	2, 6	L	01, 02, 06				
		2	2, 6	L	11, 12, 14, 15, 16				
		1	2, 6	L	51, 52, 54, 55, 56				
		2	3, 7	L	12, 15, 16				
9									SWITCH, Security Alarm
	05120465AA	1	2, 6	L	01, 02, 06				
		1	6, 2	L	11, 12, 14, 15, 16				
		1	2, 6	L	51, 52, 54, 55, 56				
		1	3, 7	L	12, 15, 16				
10									SWITCH, Security Alarm
	05120465AA	1	2, 6	L	01, 02, 06				
	05120466AA	1	2, 6	L	11, 12, 14, 15, 16				
		1	2, 6	L	51, 52, 54, 55, 56				
		1	3, 7	L	12, 15, 16				

SPRINTER (VA)

SERIES	LINE	BODY	ENGINE	TRANSMISSION
L = LOWLINE	3 = HD DODGE 2WD 6 = Lt. Duty DODGE 4WD 2 = Med. Duty DODGE 2WD 7 = Med. Duty DODGE 4WD	55 = Wagon 140" 54 = Wagon 118" 52 = Wagon 140" 51 = Wagon 118" 12 = Van 140" 11 = Van 118" 06 = Front Section 158" 14 = Van 118" 15 = Van 140" 16 = Van 158" 56 = Wagon 158" 01 = Chassis Forward Control 118" 02 = Chassis Forward Control 140"	EX8 = Engine-2.7L I5 Mercedes Turbo Diesel	DGJ = Transmission-5-Spd. Automatic,W5A580

Switches - Instrument Panel
Figure 8-805

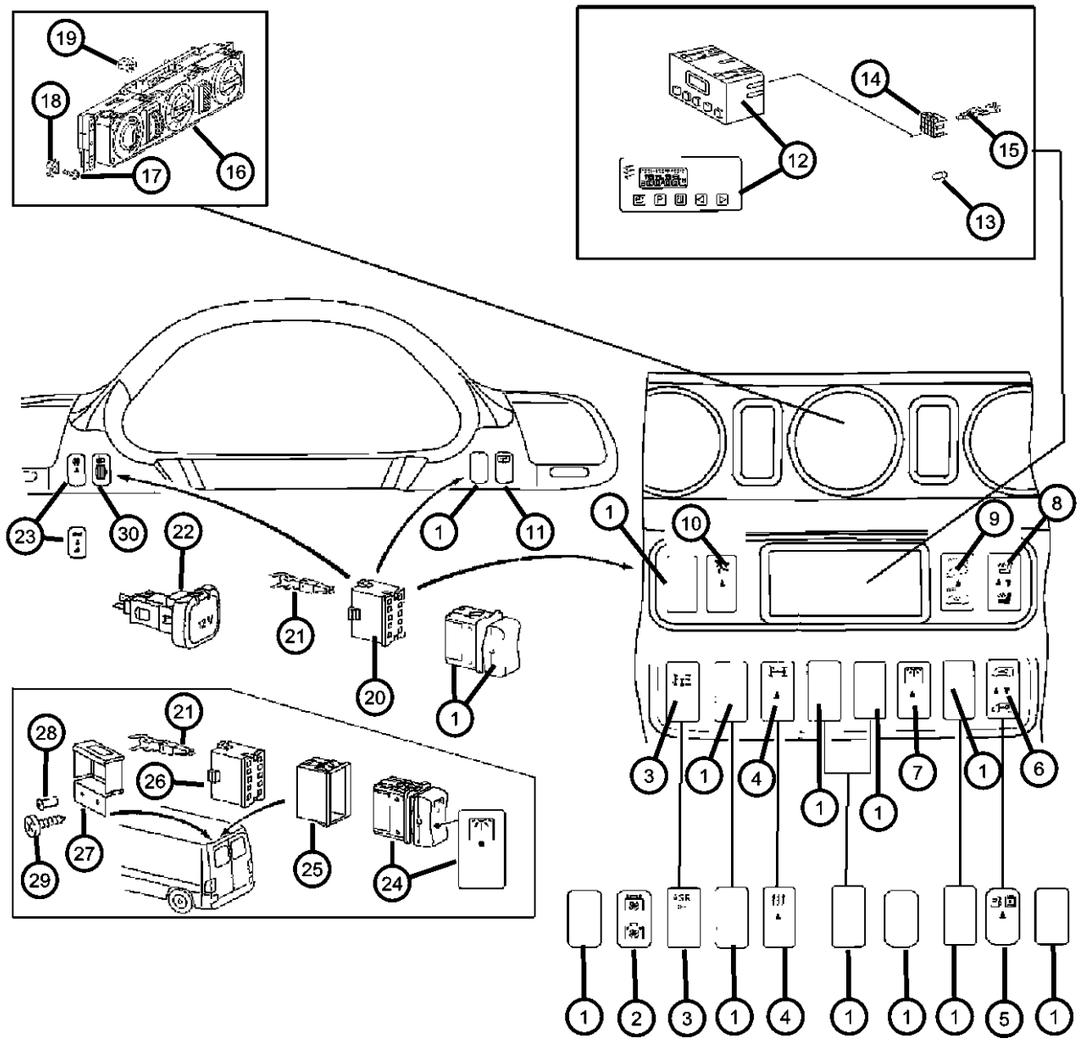

ITEM	PART NUMBER	QTY	LINE	SERIES	BODY	ENGINE	TRANS	TRIM	DESCRIPTION
11									SWITCH, Defogger
	05120438AA	1	2, 6	L	11, 12, 14, 15, 16				
		1	2, 6	L	51, 52, 54, 55, 56				
		1	3, 7	L	12, 15, 16				
12									CLOCK
	05120301AA	1	2, 6	L	01, 02, 06				
		1	2, 6	L	11, 12, 14, 15, 16				
		1	2, 6	L	51, 52, 54, 55, 56				
		1	3, 7	L	12, 15, 16				
13									BULB, 12V 1.5W
	05133469AA	1	2, 6	L	01, 02, 06				
		1	2, 6	L	11, 12, 14, 15, 16				
		1	2, 6	L	51, 52, 54, 55, 56				
		1	3, 7	L	12, 15, 16				
14									CONNECTOR
	05120552AA	1	2, 6	L	01, 02, 06				
		1	2, 6	L	11, 12, 14, 15, 16				
		1	2, 6	L	51, 52, 54, 55, 56				
		1	3, 7	L	12, 15, 16				
15									TERMINAL
	05103881AA	1	2, 6	L	01, 02, 06				
		1	2, 6	L	11, 12, 14, 15, 16				
		1	2, 6	L	51, 52, 54, 55, 56				

SPRINTER (VA)

SERIES	LINE	BODY	ENGINE	TRANSMISSION
L = LOWLINE	3 = HD DODGE 2WD 6 = Lt. Duty DODGE 4WD 2 = Med. Duty DODGE 2WD 7 = Med. Duty DODGE 4WD	55 = Wagon 140" 54 = Wagon 118" 52 = Wagon 140" 51 = Wagon 118" 12 = Van 140" 11 = Van 118" 06 = Front Section 158" 14 = Van 118" 15 = Van 140" 16 = Van 158" 56 = Wagon 158" 01 = Chassis Forward Control 118" 02 = Chassis Forward Control 140"	EX8 = Engine-2.7L I5 Mercedes Turbo Diesel	DGJ = Transmission-5-Spd. Automatic,W5A580

Switches - Instrument Panel
Figure 8-805

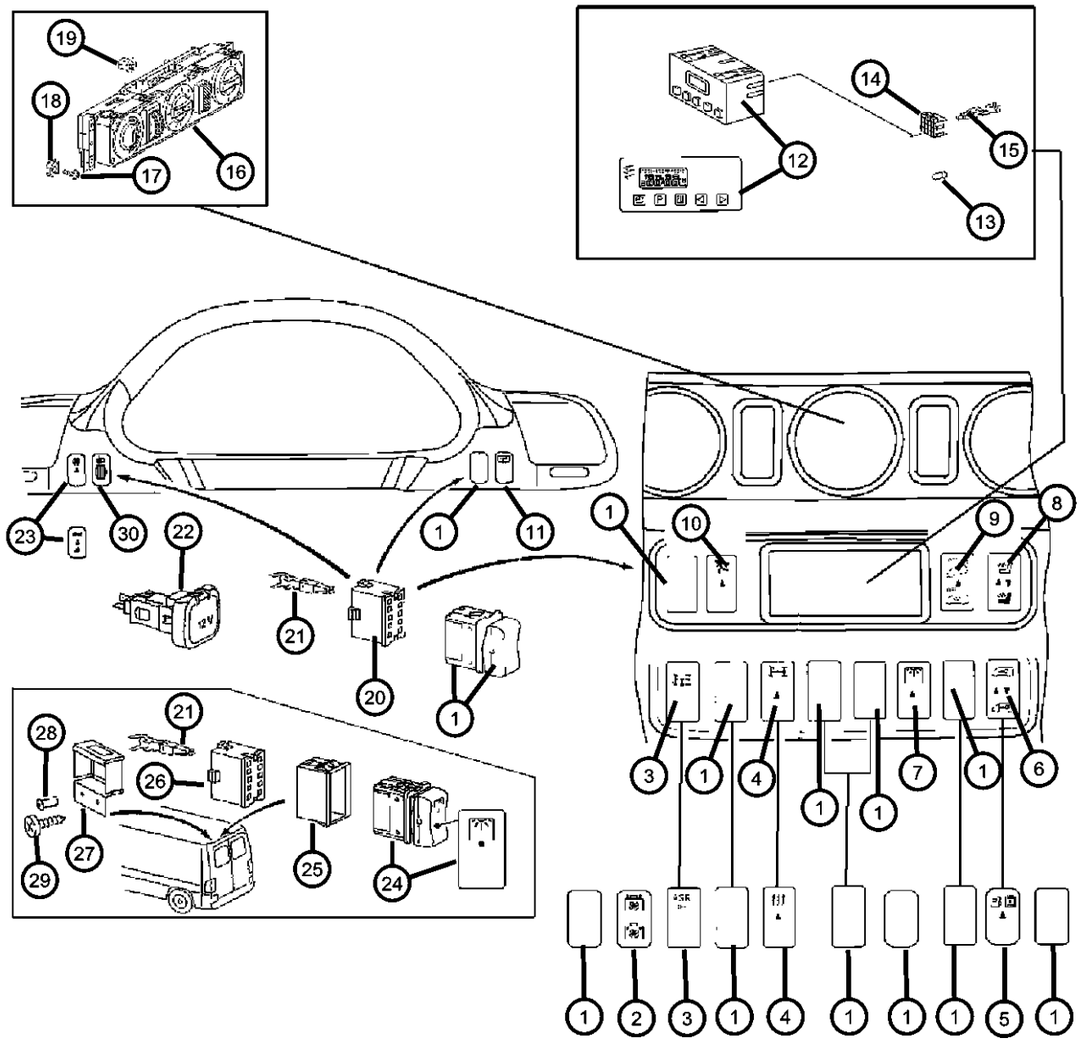

ITEM	PART NUMBER	QTY	LINE	SERIES	BODY	ENGINE	TRANS	TRIM	DESCRIPTION
		1	3, 7	L	12, 15, 16				
16									CONTROL, A/C And Heater
	05103643AA	1	2, 6	L	01, 02, 06				Air Conditionig with Auto Temperature Control
		1	2, 6	L	11, 12, 14, 15, 16				Air Conditionig with Auto Temperature Control
		1	2, 6	L	51, 52, 54, 55, 56				Air Conditionig with Auto Temperature Control
		1	3, 7	L	12, 15, 16				Air Conditionig with Auto Temperature Control[HAB]
	05103644AA	1	2, 6	L	01, 02, 06				Air Conditionig with Auto Temperature Control & with Auxiliary Hot Water Heater
		1	2, 6	L	11, 12, 14, 15, 16				Air Conditionig with Auto Temperature Control & with Auxiliary Hot Water Heater
		1	2, 6	L	51, 52, 54, 55, 56				Air Conditionig with Auto Temperature Control & with Auxiliary Hot Water Heater
	05103690AA	1	2, 6	L	01, 02, 06				Air Conditionig without Auto Temperature Control & without Auxiliary Hot Water Heater
		1	3, 7	L	12, 15, 16				Air Conditionig without Auto Temperature Control & without Auxiliary Hot Water Heater
17									SCREW
	06104610AA	3	2, 6	L	01, 02, 06				
		2	2, 6	L	11, 12, 14, 15, 16				
		4	2, 6	L	51, 52, 54, 55, 56				
		4	3, 7	L	12, 15, 16				
18									NUT, Spring
	05125861AA	2	2, 6	L	01, 02, 06				
		2	2, 6	L	11, 12, 14, 15, 16				

SPRINTER (VA)

SERIES	LINE	BODY	ENGINE	TRANSMISSION
L = LOWLINE	3 = HD DODGE 2WD 6 = Lt. Duty DODGE 4WD 2 = Med. Duty DODGE 2WD 7 = Med. Duty DODGE 4WD	55 = Wagon 140" 54 = Wagon 118" 52 = Wagon 140" 51 = Wagon 118" 12 = Van 140" 11 = Van 118" 06 = Front Section 158" 14 = Van 118" 15 = Van 140" 16 = Van 158" 56 = Wagon 158" 01 = Chassis Forward Control 118" 02 = Chassis Forward Control 140"	EX8 = Engine-2.7L I5 Mercedes Turbo Diesel	DGJ = Transmission-5-Spd. Automatic,W5A580

Switches - Instrument Panel
Figure 8-805

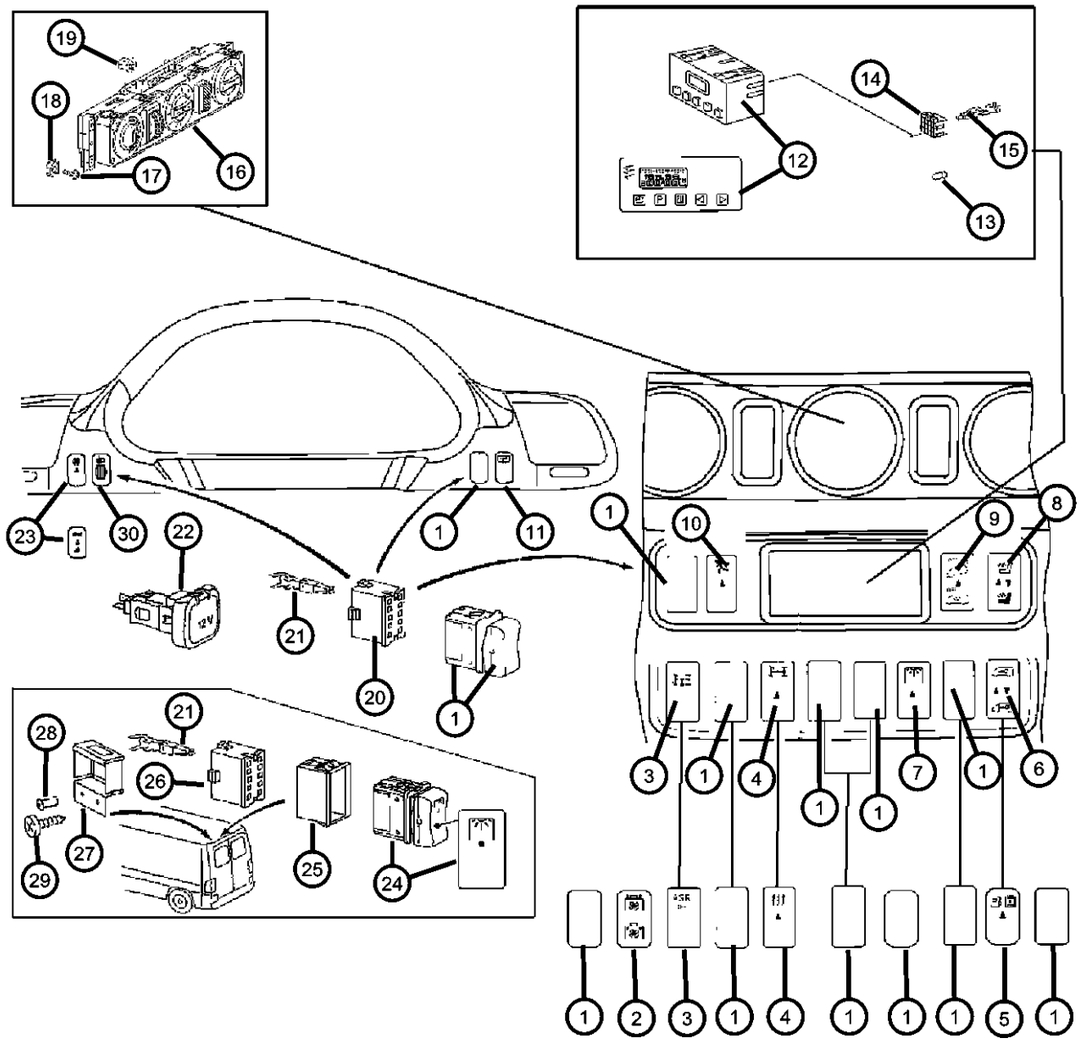

ITEM	PART NUMBER	QTY	LINE	SERIES	BODY	ENGINE	TRANS	TRIM	DESCRIPTION
		2	3, 7	L	12, 15, 16				
		2	2, 6	L	51, 52, 54, 55, 56				
19									BULB
	05133468AA	1	2, 6	L	01, 02, 06				
		1	2, 6	L	11, 12, 14, 15, 16				
		1	2, 6	L	51, 52, 54, 55, 56				
		1	3, 7	L	12, 15, 16				
20									CONNECTOR
	05120633AA	1	2, 6	L	01, 02, 06				
		1	2, 6	L	11, 12, 14, 15, 16				
		1	2, 6	L	51, 52, 54, 55, 56				
		1	3, 7	L	12, 15, 16				
21									TERMINAL
	05103882AA	1	2, 6	L	01, 02, 06				
		1	2, 6	L	11, 12, 14, 15, 16				
		1	2, 6	L	51, 52, 54, 55, 56				
		1	3, 7	L	12, 15, 16				
22									CONTROL, Air Conditioning
	05103907AA	1	7, 3	L	12, 15, 16				
		1	2, 6	L	11, 12, 14, 15, 16				
		1	2, 6	L	51, 52, 54, 55, 56				
23									SWITCH, Fog Lamp
	05120484AA	1	2, 6	L	01, 02, 06				

SPRINTER (VA)

SERIES	LINE	BODY	ENGINE	TRANSMISSION
L = LOWLINE	3 = HD DODGE 2WD 6 = Lt. Duty DODGE 4WD 2 = Med. Duty DODGE 2WD 7 = Med. Duty DODGE 4WD	55 = Wagon 140" 54 = Wagon 118" 52 = Wagon 140" 51 = Wagon 118" 12 = Van 140" 11 = Van 118" 06 = Front Section 158" 14 = Van 118" 15 = Van 140" 16 = Van 158" 56 = Wagon 158" 01 = Chassis Forward Control 118" 02 = Chassis Forward Control 140"	EX8 = Engine-2.7L I5 Mercedes Turbo Diesel	DGJ = Transmission-5-Spd. Automatic,W5A580

AR = use ase required - = Non illustrrated part

Switches - Instrument Panel
Figure 8-805

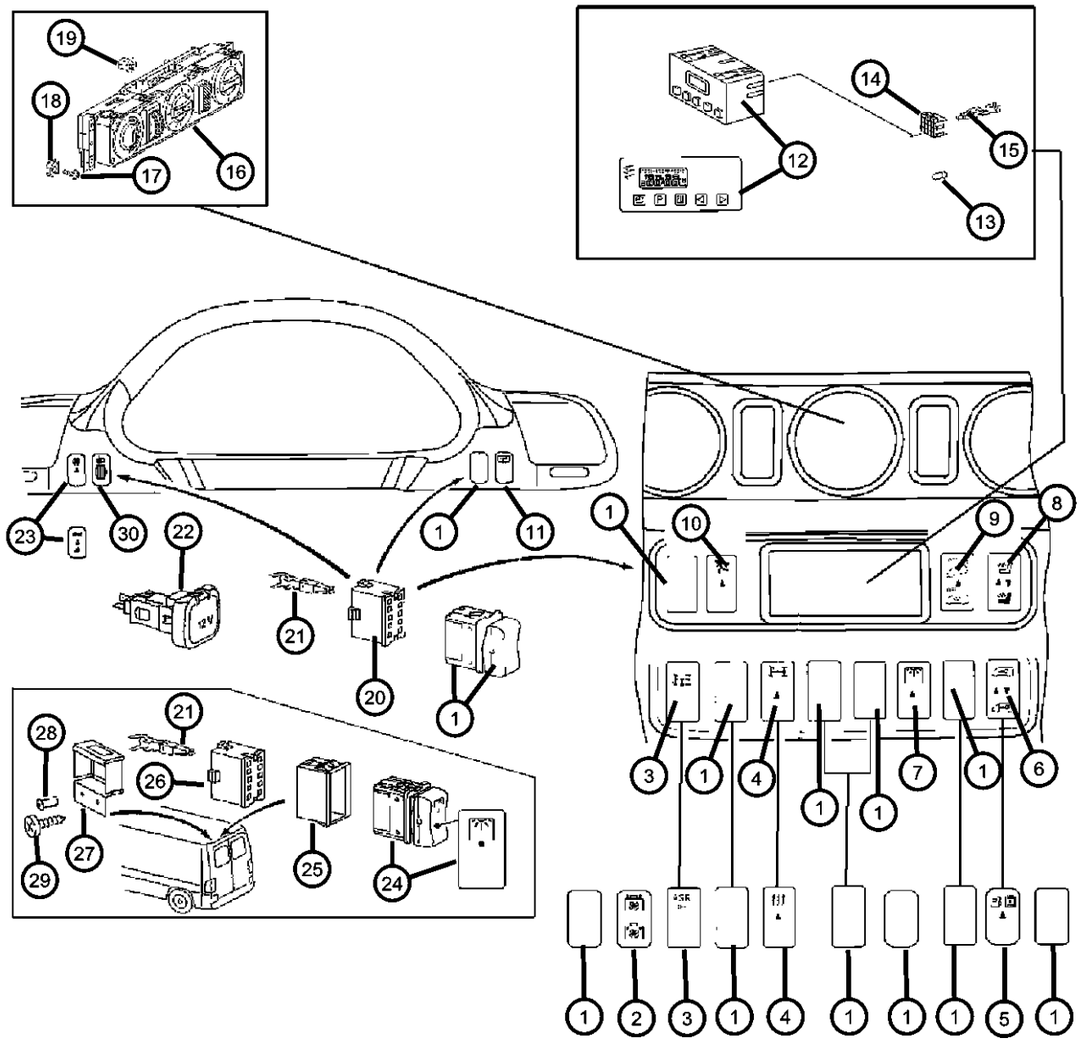

ITEM	PART NUMBER	QTY	LINE	SERIES	BODY	ENGINE	TRANS	TRIM	DESCRIPTION
		1	2, 6	L	11, 12, 14, 15, 16				
		1	2, 6	L	51, 52, 54, 55, 56				
		1	3, 7	L	12, 15, 16				
24									SWITCH, Cargo Lamp
	05103844AA	1	2, 6	L	11, 12, 14, 15, 16				
		1	3, 7	L	12, 15, 16				
	05120450AA	1	2, 6	L	01, 02, 06				
25									HOUSING, Switch
	05120247AA	2	2, 6	L	11, 12, 14, 15, 16				
		2	3, 7	L	12, 15, 16				
26									CONNECTOR
	05120596AA	2	2, 6	L	11, 12, 14, 15, 16				
		2	3, 7	L	12, 15, 16				
27									COVER, Switch
	05120411AA	1	2, 6	L	11, 12, 14, 15, 16				
		1	3, 7	L	12, 15, 16				
28									RIVET
	05103838AA	4	2, 6	L	11, 12, 14, 15, 16				
		4	2, 6	L	51, 52, 54, 55, 56				
		4	3, 7	L	12, 15, 16				
29	05126271AA	2	3, 7	L	12, 15, 16				SCREW
30									SWITCH, Headlamp Leveling
	05103658AA	1	2, 6	L	01, 02, 06				
		1	2, 6	L	11, 12, 14, 15, 16				

SPRINTER (VA)

SERIES	LINE	BODY	ENGINE	TRANSMISSION
L = LOWLINE	3 = HD DODGE 2WD 6 = Lt. Duty DODGE 4WD 2 = Med. Duty DODGE 2WD 7 = Med. Duty DODGE 4WD	55 = Wagon 140" 54 = Wagon 118" 52 = Wagon 140" 51 = Wagon 118" 12 = Van 140" 11 = Van 118" 06 = Front Section 158" 14 = Van 118" 15 = Van 140" 16 = Van 158" 56 = Wagon 158" 01 = Chassis Forward Control 118" 02 = Chassis Forward Control 140"	EX8 = Engine-2.7L I5 Mercedes Turbo Diesel	DGJ = Transmission-5-Spd. Automatic,W5A580

Switches - Instrument Panel
Figure 8-805

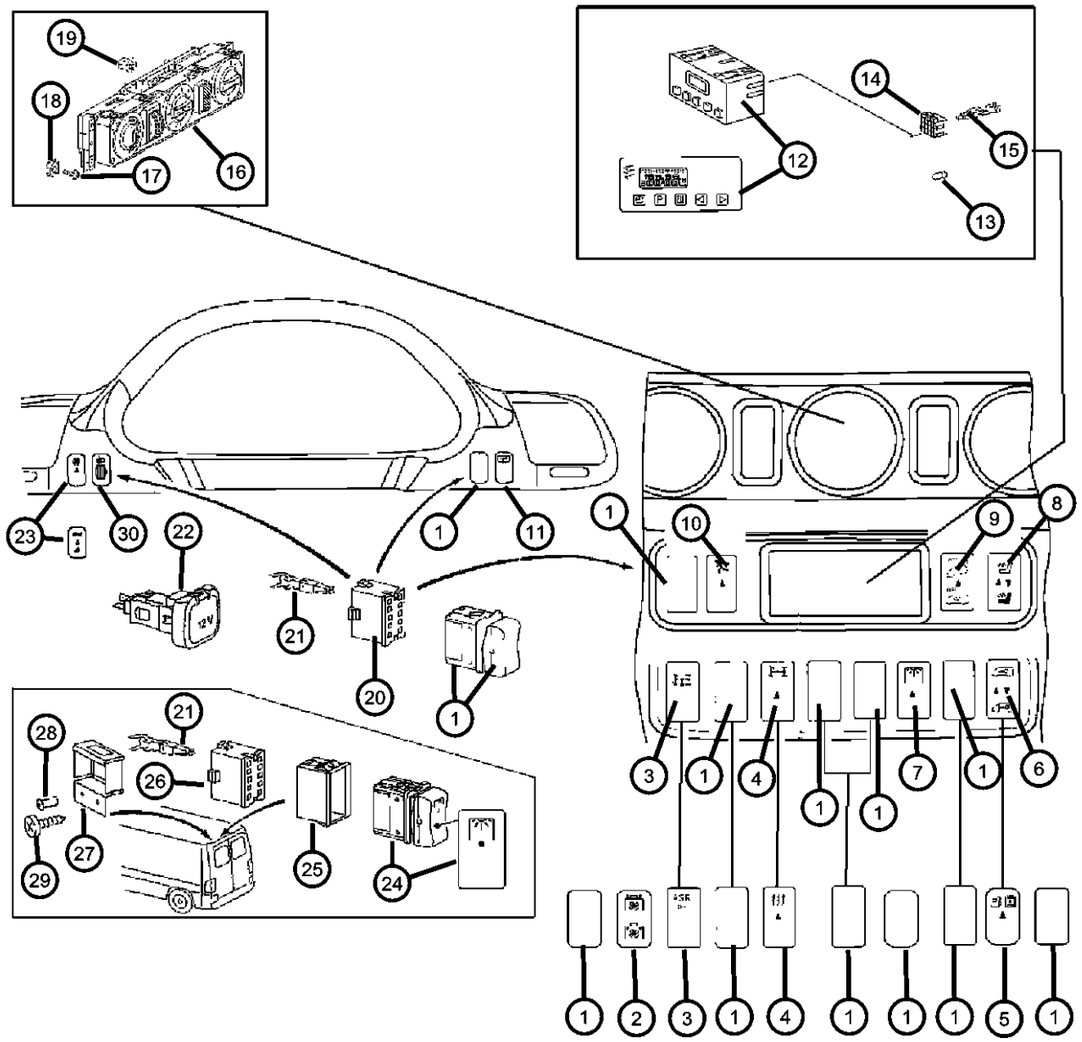

ITEM	PART NUMBER	QTY	LINE	SERIES	BODY	ENGINE	TRANS	TRIM	DESCRIPTION
		1	2, 6	L	51, 52, 54, 55, 56				
		1	3, 7	L	12, 15, 16				

SPRINTER (VA)

SERIES	LINE	BODY	ENGINE	TRANSMISSION
L = LOWLINE	3 = HD DODGE 2WD 6 = Lt. Duty DODGE 4WD 2 = Med. Duty DODGE 2WD 7 = Med. Duty DODGE 4WD	55 = Wagon 140" 54 = Wagon 118" 52 = Wagon 140" 51 = Wagon 118" 12 = Van 140" 11 = Van 118" 06 = Front Section 158" 14 = Van 118" 15 = Van 140" 16 = Van 158" 56 = Wagon 158" 01 = Chassis Forward Control 118" 02 = Chassis Forward Control 140"	EX8 = Engine-2.7L I5 Mercedes Turbo Diesel	DGJ = Transmission-5-Spd. Automatic,W5A580

AR = use ase required - = Non illustrrated part

Switches -Steering Column
Figure 8-810

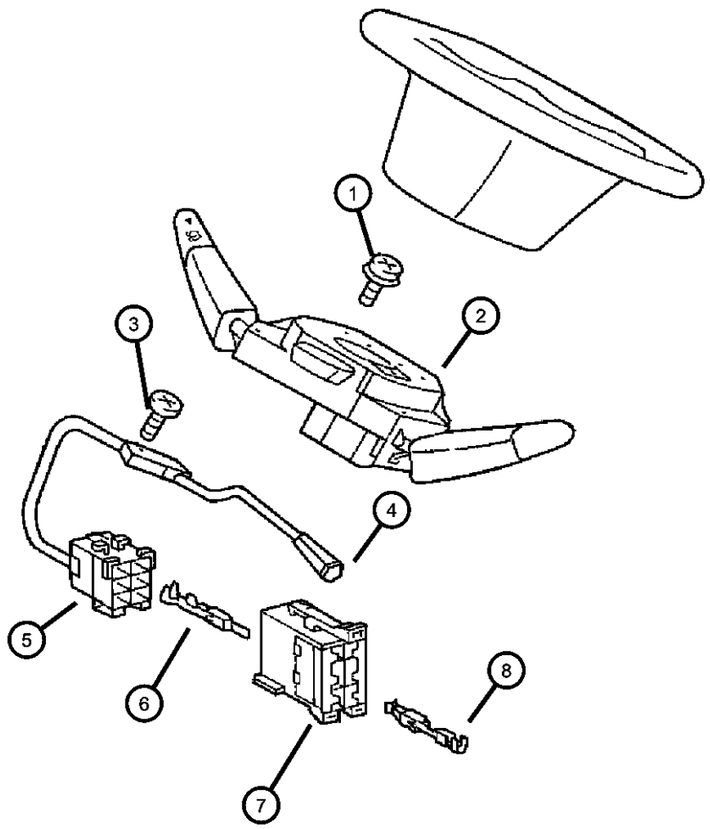

ITEM	PART NUMBER	QTY	LINE	SERIES	BODY	ENGINE	TRANS	TRIM	DESCRIPTION
1									SCREW
	05104636AA	2	2, 6	L	11, 12, 14, 15, 16				
		2	2, 6	L	51, 52, 54, 55, 56				
		2	3, 7	L	12, 15, 16				
2									SWITCH, Steering column
	05103745AA	1	3, 7	L	12, 15				
		1							
	05103539AA	1	2, 6	L	11, 12, 14, 15, 16				[5AF]
		1	3, 7	L	12, 15, 16				[5AF]
		1	2, 6	L	51, 52, 54, 55, 56				[5AF]
		1	2, 6	L	01, 02				
		1	2, 6	L	11, 12, 14, 15				
		1	2, 6	L	51, 52, 54, 55				
3									SCREW
	05126175AA	1	2, 6	L	11, 12, 14, 15, 16				
		1	2, 6	L	51, 52, 54, 55, 56				
		1	3, 7	L	12, 15, 16				
4									SWITCH, Speed Control
	05103744AA	1	2, 6	L	11, 12, 14, 15, 16				
		1	2, 6	L	51, 52, 54, 55, 56				
		1	3, 7	L	12, 15, 16				
5									INSULATOR, 6 Way
	05120792AA	1	2, 6	L	11, 12, 14, 15, 16				

SPRINTER (VA)

SERIES	LINE	BODY	ENGINE	TRANSMISSION
L = LOWLINE	3 = HD DODGE 2WD 6 = Lt. Duty DODGE 4WD 2 = Med. Duty DODGE 2WD 7 = Med. Duty DODGE 4WD	55 = Wagon 140" 54 = Wagon 118" 52 = Wagon 140" 51 = Wagon 118" 12 = Van 140" 11 = Van 118" 06 = Front Section 158" 14 = Van 118" 15 = Van 140" 16 = Van 158" 56 = Wagon 158" 01 = Chassis Forward Control 118" 02 = Chassis Forward Control 140"	EX8 = Engine-2.7L I5 Mercedes Turbo Diesel	DGJ = Transmission-5-Spd. Automatic,W5A580

Switches -Steering Column
Figure 8-810

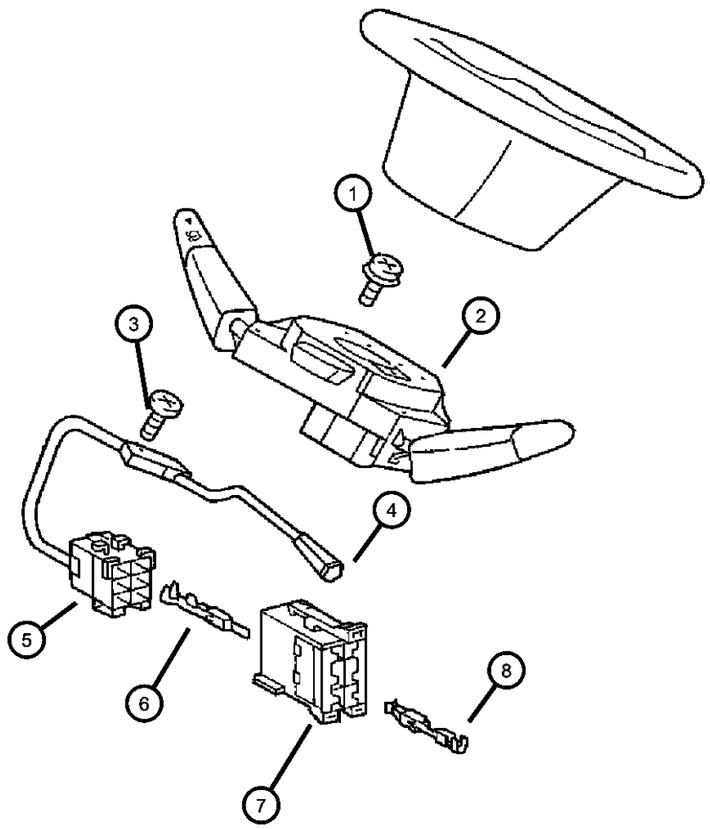

ITEM	PART NUMBER	QTY	LINE	SERIES	BODY	ENGINE	TRANS	TRIM	DESCRIPTION
		1	2, 6	L	51, 52, 54, 55, 56				
		1	3, 7	L	12, 15, 16				
6									TERMINAL, Male
	05133909AA	99	2, 6	L	11, 12, 14, 15, 16				
		99	2, 6	L	51, 52, 54, 55, 56				
		99	3, 7	L	12, 15, 16				
7									CONNECTOR
	05120786AA	1	2, 6	L	11, 12, 14, 15, 16				
		1	2, 6	L	51, 52, 54, 55, 56				
		1	3, 7	L	12, 15, 16				
8									TERMINAL
	05133478AA	99	2, 6	L	11, 12, 14, 15, 16				
		99	2, 6	L	51, 52, 54, 55, 56				
		99	3, 7	L	12, 15, 16				
-9									SENSOR, Steering Wheel Angle
	05129606AA	1	2, 6	L	01, 02, 06				
		1	2, 6	L	11, 12, 14, 15, 16				
		1	2, 6	L	51, 52, 54, 55, 56				

SPRINTER (VA)

SERIES	LINE	BODY	ENGINE	TRANSMISSION
L = LOWLINE	3 = HD DODGE 2WD 6 = Lt. Duty DODGE 4WD 2 = Med. Duty DODGE 2WD 7 = Med. Duty DODGE 4WD	55 = Wagon 140" 54 = Wagon 118" 52 = Wagon 140" 51 = Wagon 118" 12 = Van 140" 11 = Van 118" 06 = Front Section 158" 14 = Van 118" 15 = Van 140" 16 = Van 158" 56 = Wagon 158" 01 = Chassis Forward Control 118" 02 = Chassis Forward Control 140"	EX8 = Engine-2.7L I5 Mercedes Turbo Diesel	DGJ = Transmission-5-Spd. Automatic,W5A580

Switches - Door
Figure 8-815

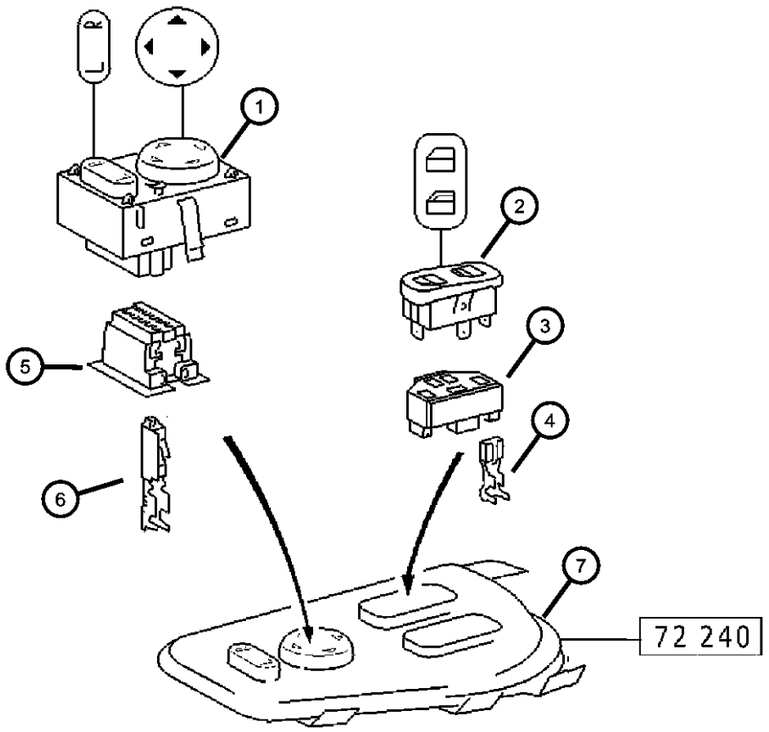

ITEM	PART NUMBER	QTY	LINE	SERIES	BODY	ENGINE	TRANS	TRIM	DESCRIPTION
1									SWITCH, Mirror
	05103845AA	1	2, 6	L	11, 12, 14, 15, 16				
		1	2, 6	L	56, 51, 52, 54, 55				
		1	3, 7	L	02, 06				
		1	3, 7	L	12, 15, 16				
		1	2, 6	L	01, 02, 06				
2									SWITCH, Power Window
	05103856AA	2	2, 6	L	11, 12, 14, 15, 16				
		2	3, 7	L	12, 15, 16				
		2	2, 6	L	51, 52, 54, 55, 56				
3									CONNECTOR
	05120604AA	1	3, 7	L	12, 15, 16				
		1	2, 6	L	11, 12, 14, 15, 16				
		1	2, 6	L	51, 52, 54, 55, 56				
4									TERMINAL, Female
	05133519AA	99	2, 6	L	11, 12, 14, 15, 16				
		99	2, 6	L	51, 52, 54, 55, 56				
		99	3, 7	L	12, 15, 16				
5									CONNECTOR
	05120782AA	1	2, 6	L	11, 12, 14, 15, 16				
		1	2, 6	L	51, 52, 54, 55, 56				
		1	3, 7	L	12, 15, 16				
6									TERMINAL
	05103873AA	99	3, 7	L	12, 15, 16				

SPRINTER (VA)

SERIES	LINE	BODY	ENGINE	TRANSMISSION
L = LOWLINE	3 = HD DODGE 2WD 6 = Lt. Duty DODGE 4WD 2 = Med. Duty DODGE 2WD 7 = Med. Duty DODGE 4WD	55 = Wagon 140" 54 = Wagon 118" 52 = Wagon 140" 51 = Wagon 118" 12 = Van 140" 11 = Van 118" 06 = Front Section 158" 14 = Van 118" 15 = Van 140" 16 = Van 158" 56 = Wagon 158" 01 = Chassis Forward Control 118" 02 = Chassis Forward Control 140"	EX8 = Engine-2.7L I5 Mercedes Turbo Diesel	DGJ = Transmission-5-Spd. Automatic,W5A580

AR = use ase required - = Non illustrrated part

Switches - Door
Figure 8-815

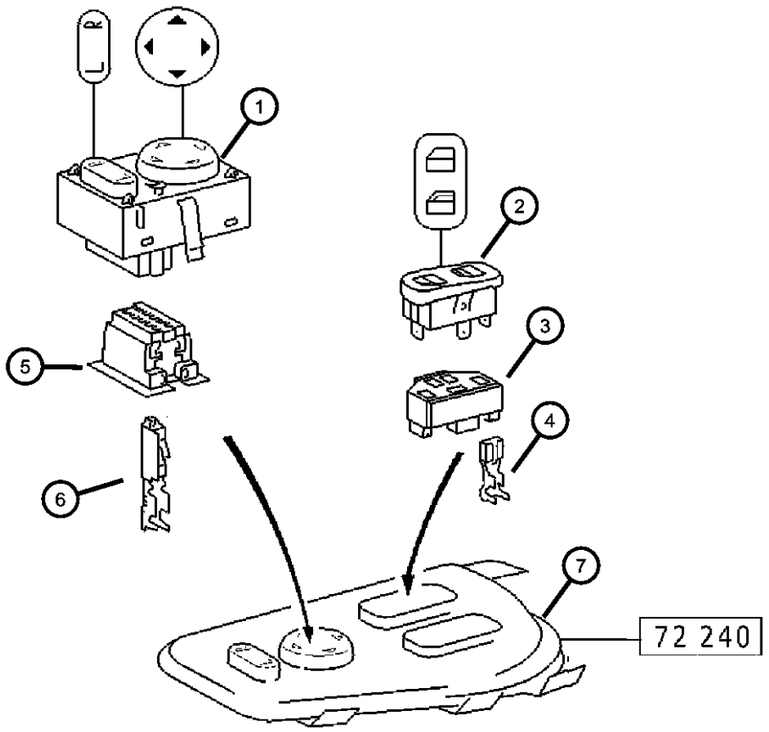

ITEM	PART NUMBER	QTY	LINE	SERIES	BODY	ENGINE	TRANS	TRIM	DESCRIPTION
		99	2, 6	L	11, 12, 14, 15, 16				
		99	2, 6	L	51, 52, 54, 55, 56				
7									BEZEL, Power Window/Door Lock Switch
	05123790AA	1	2, 6	L	01, 02, 06				Left
		1	2, 6	L	11, 12, 14, 15, 16				Left
		1	2, 6	L	51, 52, 54, 55, 56				Left
		1	3, 7	L	12, 15, 16				Left
	05123791AA	1	2, 6	L	02, 01, 06				Right
		1	2, 6	L	11, 12, 14, 15, 16				Right
		1	2, 6	L	51, 52, 54, 55, 56				Right
		1	3, 7	L	12, 15, 16				Right

SPRINTER (VA)

SERIES	LINE	BODY	ENGINE	TRANSMISSION
L = LOWLINE	3 = HD DODGE 2WD 6 = Lt. Duty DODGE 4WD 2 = Med. Duty DODGE 2WD 7 = Med. Duty DODGE 4WD	55 = Wagon 140" 54 = Wagon 118" 52 = Wagon 140" 51 = Wagon 118" 12 = Van 140" 11 = Van 118" 06 = Front Section 158" 14 = Van 118" 15 = Van 140" 16 = Van 158" 56 = Wagon 158" 01 = Chassis Forward Control 118" 02 = Chassis Forward Control 140"	EX8 = Engine-2.7L I5 Mercedes Turbo Diesel	DGJ = Transmission-5-Spd. Automatic,W5A580

Switch Brake
Figure 8-820

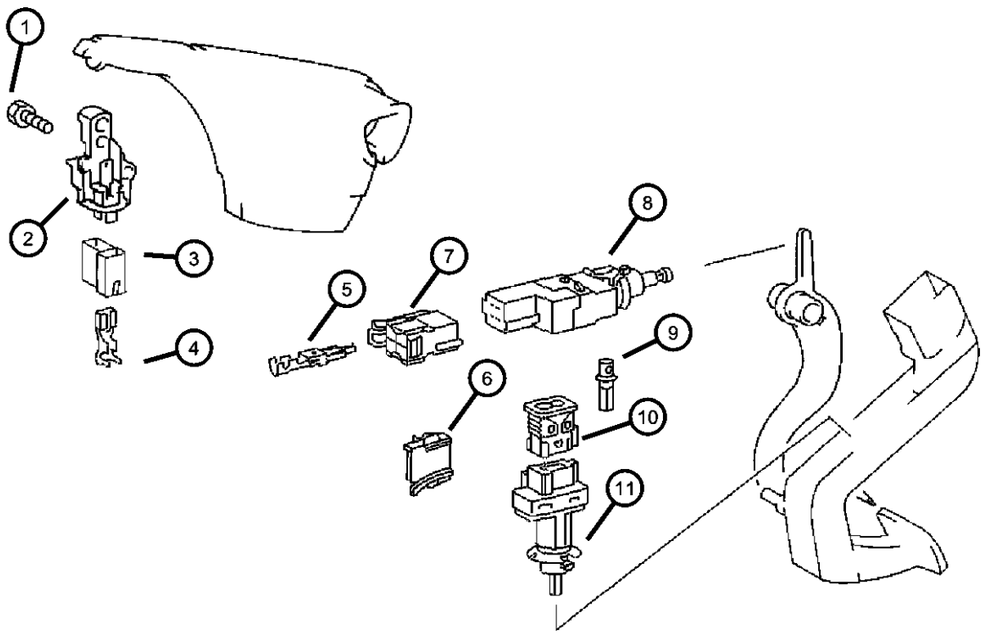

ITEM	PART NUMBER	QTY	LINE	SERIES	BODY	ENGINE	TRANS	TRIM	DESCRIPTION
1									SCREW
	05126147AB	1	2, 6	L	11, 12, 14, 15, 16				
		1	2, 6	L	51, 52, 54, 55, 56				
		1	3, 7	L	12, 15, 16				
2									SWITCH, Parking Brake
	05103540AA	1	2, 6	L	11, 12, 14, 15, 16				
		1	2, 6	L	51, 52, 54, 55, 56				
		1	3, 7	L	12, 15, 16				
3									INSULATOR, 2 Way Female
	05103754AA	2	2, 6	L	11, 12, 14, 15, 16				
		2	2, 6	L	51, 52, 54, 55, 56				
		2	3, 7	L	12, 15, 16				
4									TERMINAL, Female
	05114451AA	99	2, 6	L	11, 12, 14, 15, 16				
		99	2, 6	L	51, 52, 54, 55, 56				
		99	3, 7	L	12, 15, 16				
5									TERMINAL
	05133979AB	99	2, 6	L	11, 12, 14, 15, 16				
		99	2, 6	L	51, 52, 54, 55, 56				
		99	3, 7	L	12, 15, 16				
6									CONNECTOR
	05120772AA	1	2, 6	L	11, 12, 14, 15, 16				
		1	2, 6	L	51, 52, 54, 55, 56				

SPRINTER (VA)

SERIES	LINE	BODY	ENGINE	TRANSMISSION
L = LOWLINE	3 = HD DODGE 2WD 6 = Lt. Duty DODGE 4WD 2 = Med. Duty DODGE 2WD 7 = Med. Duty DODGE 4WD	55 = Wagon 140" 54 = Wagon 118" 52 = Wagon 140" 51 = Wagon 118" 12 = Van 140" 11 = Van 118" 06 = Front Section 158" 14 = Van 118" 15 = Van 140" 16 = Van 158" 56 = Wagon 158" 01 = Chassis Forward Control 118" 02 = Chassis Forward Control 140"	EX8 = Engine-2.7L I5 Mercedes Turbo Diesel	DGJ = Transmission-5-Spd. Automatic,W5A580

Switch Brake
Figure 8-820

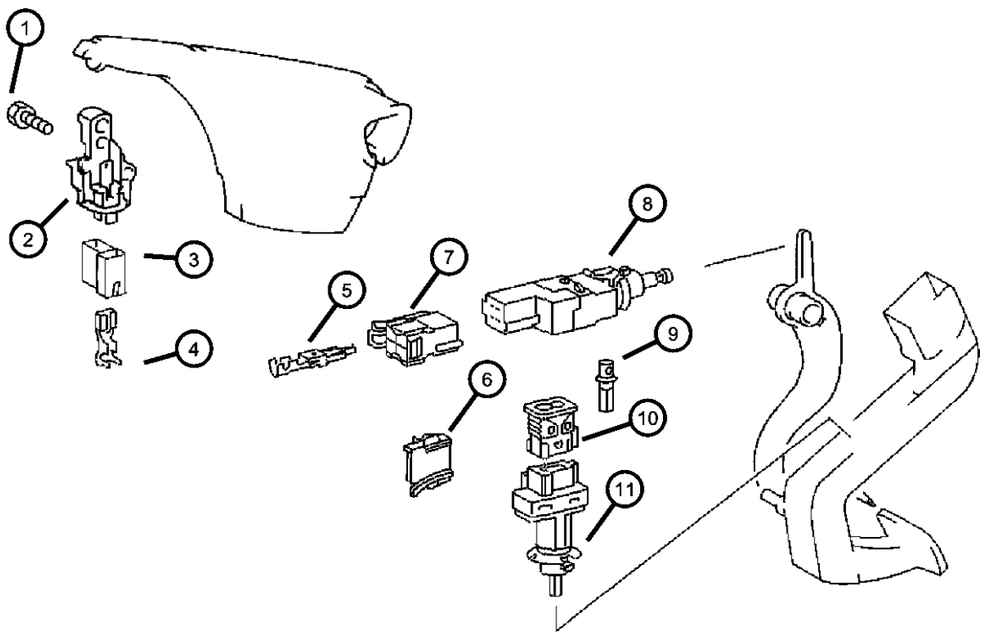

ITEM	PART NUMBER	QTY	LINE	SERIES	BODY	ENGINE	TRANS	TRIM	DESCRIPTION
		1	3, 7	L	12, 15, 16				
7									INSULATOR, 4 Way
	05120776AA	1	2, 6	L	11, 12, 14, 15, 16				
		1	2, 6	L	51, 52, 54, 55, 56				
		1	3, 7	L	12, 15, 16				
8									SWITCH, Stop Lamp
	05101496AA	1	2, 3, 6, 7	L			DGJ		
	05103748AA	1	2, 6	L			DGJ		[BNB]
9									TERMINAL
	05133478AA	99	2, 6	L	11, 12, 14, 15, 16				
		99	2, 6	L	51, 52, 54, 55, 56				
		99	3, 7	L	12, 15, 16				
10									INSULATOR, 2 Way Female
	05120725AA	1	2, 6	L	11, 12, 14, 15, 16				
		1	2, 6	L	51, 52, 54, 55, 56				
		1	3, 7	L	12, 15, 16				
11									SWITCH, Clutch
	05098407AA	1	2, 6	L	11, 12, 14, 15, 16		DGJ		
		1	2, 6	L	51, 52, 54, 55, 56		DGJ		
		1	3, 7	L	12, 15, 16		DGJ		

SPRINTER (VA)

SERIES	LINE	BODY	ENGINE	TRANSMISSION
L = LOWLINE	3 = HD DODGE 2WD 6 = Lt. Duty DODGE 4WD 2 = Med. Duty DODGE 2WD 7 = Med. Duty DODGE 4WD	55 = Wagon 140" 54 = Wagon 118" 52 = Wagon 140" 51 = Wagon 118" 12 = Van 140" 11 = Van 118" 06 = Front Section 158" 14 = Van 118" 15 = Van 140" 16 = Van 158" 56 = Wagon 158" 01 = Chassis Forward Control 118" 02 = Chassis Forward Control 140"	EX8 = Engine-2.7L I5 Mercedes Turbo Diesel	DGJ = Transmission-5-Spd. Automatic,W5A580

Horns & Alarm
Figure 8-905

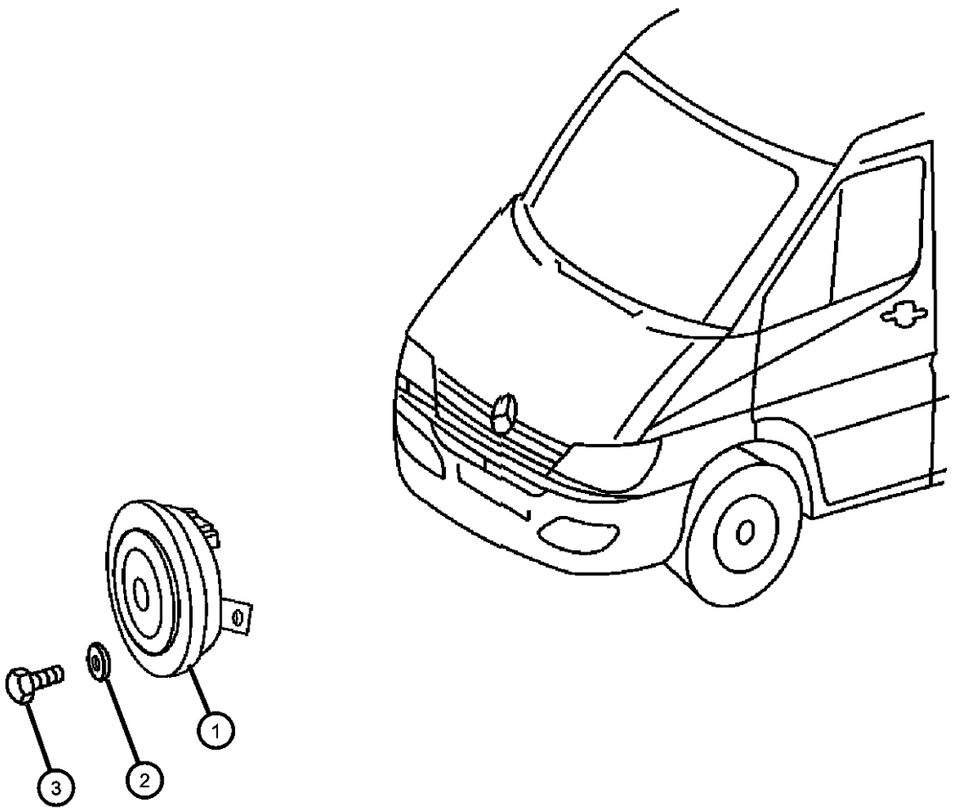

ITEM	PART NUMBER	QTY	LINE	SERIES	BODY	ENGINE	TRANS	TRIM	DESCRIPTION
1									HORN
	05120370AA	1	2, 6	L	11, 12, 14, 15, 16				
		1	2, 6	L	51, 52, 54, 55, 56				
		1	3, 7	L	12, 15, 16				
2									LOCK WASHER
	05104669AA	1	2, 6	L	11, 12, 14, 15, 16				
		1	2, 6	L	51, 52, 54, 55, 56				
		1	3, 7	L	12, 15, 16				
3									SCREW
	06104022AA	1	2, 6	L	11, 12, 14, 15, 16				
		1	2, 6	L	51, 52, 54, 55, 56				
		1	3, 7	L	12, 15, 16				
-4									ALARM
	05135946AA	1	2, 6	L	51, 52, 54, 55, 56				Back up warning
		1	2, 6	L	11, 12, 14, 15, 16				Back up warning
		1	2, 6	L	01, 02, 06				Back up warning
		1	3, 7	L	12, 15, 16				Back up warning
		1	3, 7	L	02, 06				Back up warning

SPRINTER (VA)

SERIES	LINE	BODY	ENGINE	TRANSMISSION
L = LOWLINE	3 = HD DODGE 2WD 6 = Lt. Duty DODGE 4WD 2 = Med. Duty DODGE 2WD 7 = Med. Duty DODGE 4WD	55 = Wagon 140" 54 = Wagon 118" 52 = Wagon 140" 51 = Wagon 118" 12 = Van 140" 11 = Van 118" 06 = Front Section 158" 14 = Van 118" 15 = Van 140" 16 = Van 158" 56 = Wagon 158" 01 = Chassis Forward Control 118" 02 = Chassis Forward Control 140"	EX8 = Engine-2.7L I5 Mercedes Turbo Diesel	DGJ = Transmission-5-Spd. Automatic,W5A580

Battery Tray & Cables
Figure 8-1005

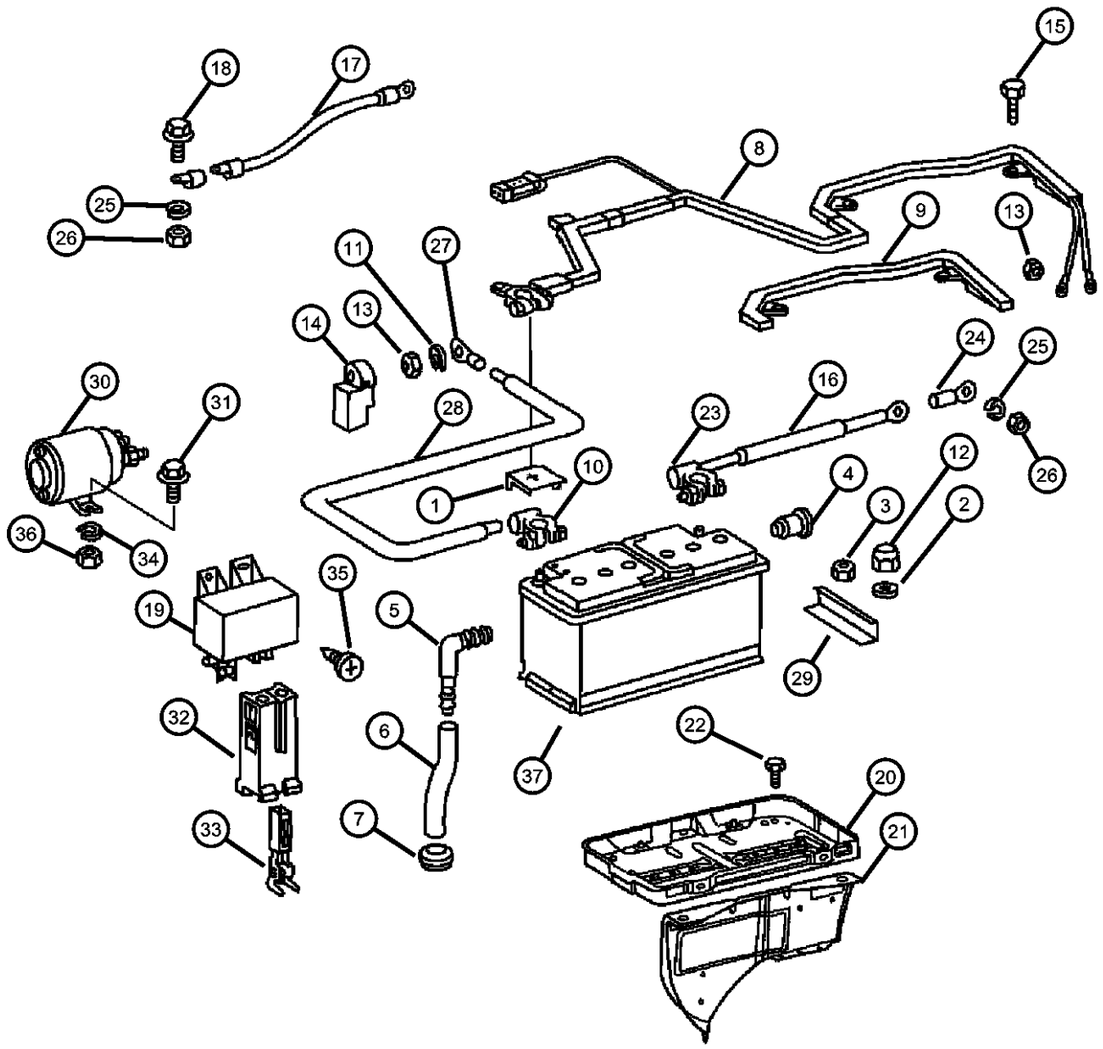

ITEM	PART NUMBER	QTY	LINE	SERIES	BODY	ENGINE	TRANS	TRIM	DESCRIPTION
1									COVER, Battery Terminal
	05098850AA	1	2, 6	L	15, 16, 11, 12, 14				
		1	2, 6	L	51, 52, 54, 55, 56				
		1	3, 7	L	12, 15, 16				
2									WASHER, Flat
	05104612AA	2	2, 6	L	52, 54, 55, 56, 51				
		2	3, 7	L	12, 15, 16				
3		2							NUT, Hex, M6, (NOT SERVICED)
4									PLUG
	05099303AA	1	2, 6	L	11, 12, 14, 15, 16				
		1	2, 6	L	51, 52, 54, 55, 56				
		1	3, 7	L	12, 15, 16				
5									ELBOW, Male Adapter
	05125802AA	1	2, 6	L	11, 12, 14, 15, 16				
		1	2, 6	L	51, 52, 54, 55, 56				
		1	3, 7	L	12, 15, 16				
6									HOSE, Battery Vent
	05125962AA	75	2, 6	L	11, 12, 14, 15, 16				10 Meters Long
		75	2, 6	L	51, 52, 54, 55, 56				10 Meters Long
		75	3, 7	L	12, 15, 16				10 Meters Long
7									GROMMET, Floor
	05125940AA	1	2, 6	L	11, 12, 14, 15, 16				
		1	2, 6	L	51, 52, 54, 55, 56				
		1	3, 7	L	12, 15, 16				

SPRINTER (VA)

SERIES	LINE	BODY	ENGINE	TRANSMISSION
L = LOWLINE	3 = HD DODGE 2WD 6 = Lt. Duty DODGE 4WD 2 = Med. Duty DODGE 2WD 7 = Med. Duty DODGE 4WD	55 = Wagon 140" 54 = Wagon 118" 52 = Wagon 140" 51 = Wagon 118" 12 = Van 140" 11 = Van 118" 06 = Front Section 158" 14 = Van 118" 15 = Van 140" 16 = Van 158" 56 = Wagon 158" 01 = Chassis Forward Control 118" 02 = Chassis Forward Control 140"	EX8 = Engine-2.7L I5 Mercedes Turbo Diesel	DGJ = Transmission-5-Spd. Automatic,W5A580

Battery Tray & Cables
Figure 8-1005

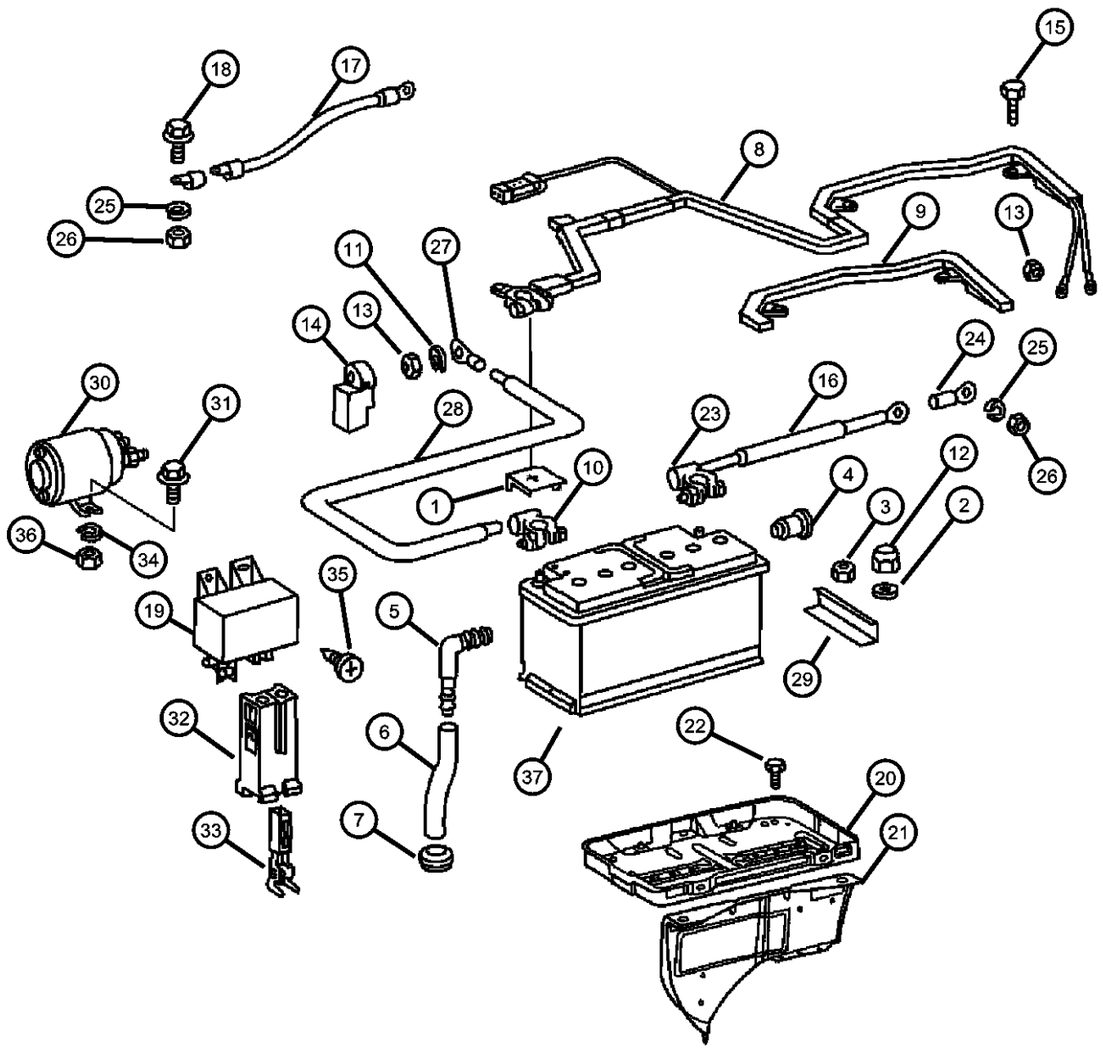

ITEM	PART NUMBER	QTY	LINE	SERIES	BODY	ENGINE	TRANS	TRIM	DESCRIPTION
8									CABLE, Battery Positive
	05120157AA	1	2, 6	L	01, 02, 06	EX9			[4Z1,4XS]
		1	2, 6	L	12, 14, 15, 16, 11	EX9			[4Z1,4XS]
		1	2, 6	L	51, 52, 54, 55, 56	EX9			[4Z1,4XS]
		1	3, 7	L	12, 15, 16	EX9			[4Z1,4XS]
	05120180AA	1	2, 6	L	01, 02, 06	EX8, EX9			
		1	2, 6	L	11, 12, 14, 15, 16	EX8, EX9			
		1	2, 6	L	56, 51, 52, 54, 55	EX8, EX9			
		1	3, 7	L	02, 06	EX8, EX9			
		1	3, 7	L	12, 15, 16	EX8, EX9			
9									COVER, Wiring Protector
	05120950AA	1	2, 6	L	01, 02, 06	EX9			
		1	2, 6	L	11, 12, 14, 15, 16	EX9			
		1	2, 6	L	51, 52, 54, 55, 56	EX9			
		1	3, 7	L	12, 15, 16	EX9			
10									TERMINAL, Battery
	05120949AA	1	2, 6	L	11, 12, 14, 15, 16				
		1	2, 6	L	51, 52, 54, 55, 56				
		1	3, 7	L	12, 15, 16				
11									LOCK WASHER
	05104669AA	1	6, 2	L	11, 12, 14, 15, 16				
		1	2, 6	L	51, 52, 54, 55, 56				
		1	3, 7	L	12, 15, 16				

SPRINTER (VA)

SERIES	LINE	BODY	ENGINE	TRANSMISSION
L = LOWLINE	3 = HD DODGE 2WD 6 = Lt. Duty DODGE 4WD 2 = Med. Duty DODGE 2WD 7 = Med. Duty DODGE 4WD	55 = Wagon 140" 54 = Wagon 118" 52 = Wagon 140" 51 = Wagon 118" 12 = Van 140" 11 = Van 118" 06 = Front Section 158" 14 = Van 118" 15 = Van 140" 16 = Van 158" 56 = Wagon 158" 01 = Chassis Forward Control 118" 02 = Chassis Forward Control 140"	EX8 = Engine-2.7L I5 Mercedes Turbo Diesel	DGJ = Transmission-5-Spd. Automatic,W5A580

Battery Tray & Cables
Figure 8-1005

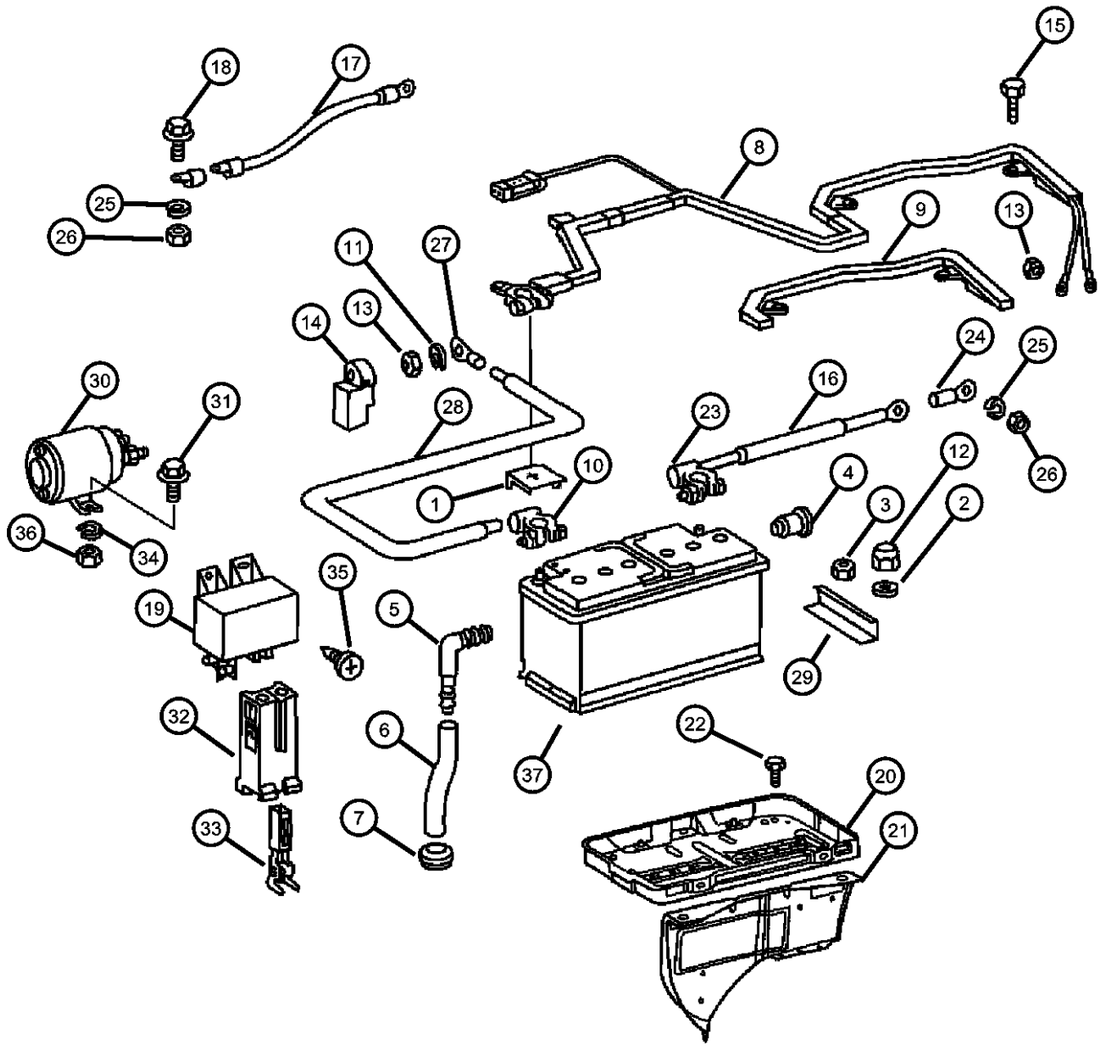

ITEM	PART NUMBER	QTY	LINE	SERIES	BODY	ENGINE	TRANS	TRIM	DESCRIPTION
12									NUT
	05133943AA	2	2, 6	L	01, 02, 06				
		2	2, 6	L	11, 12, 14, 15, 16				
		2	2, 6	L	51, 52, 54, 55, 56				
		99	3, 7	L	12, 15, 16				
13									NUT, M8
	06104709AA	1	2, 6	L	11, 12, 14, 15, 16				
		1	2, 6	L	51, 52, 54, 55, 56				
		1	3, 7	L	12, 15, 16				
14									COVER, Battery Terminal
	05120925AA	1	2, 6	L	11, 12, 14, 15, 16				
		1	2, 6	L	51, 52, 54, 55, 56				
		1	3, 7	L	12, 15, 16				
15									SCREW
	05073824AA	2	2, 6	L	11, 12, 14, 15, 16				
		2	2, 6	L	51, 52, 54, 55, 56				
		2	3, 7	L	12, 15, 16				
16									CABLE, Battery Negative
	05120219AA	1	2, 6	L	11, 12, 14, 15, 16				10 Meters Long
		1	2, 6	L	51, 52, 54, 55, 56				10 Meters Long
		1	3, 7	L	12, 15, 16				10 Meters Long
	05133954AA	100	2, 6	L	11, 12, 14, 15, 16				10 Meters Long
		100	2, 6	L	51, 52, 54, 55, 56				10 Meters Long

SPRINTER (VA)

SERIES	LINE	BODY	ENGINE	TRANSMISSION
L = LOWLINE	3 = HD DODGE 2WD 6 = Lt. Duty DODGE 4WD 2 = Med. Duty DODGE 2WD 7 = Med. Duty DODGE 4WD	55 = Wagon 140" 54 = Wagon 118" 52 = Wagon 140" 51 = Wagon 118" 12 = Van 140" 11 = Van 118" 06 = Front Section 158" 14 = Van 118" 15 = Van 140" 16 = Van 158" 56 = Wagon 158" 01 = Chassis Forward Control 118" 02 = Chassis Forward Control 140"	EX8 = Engine-2.7L I5 Mercedes Turbo Diesel	DGJ = Transmission-5-Spd. Automatic,W5A580

Battery Tray & Cables
Figure 8-1005

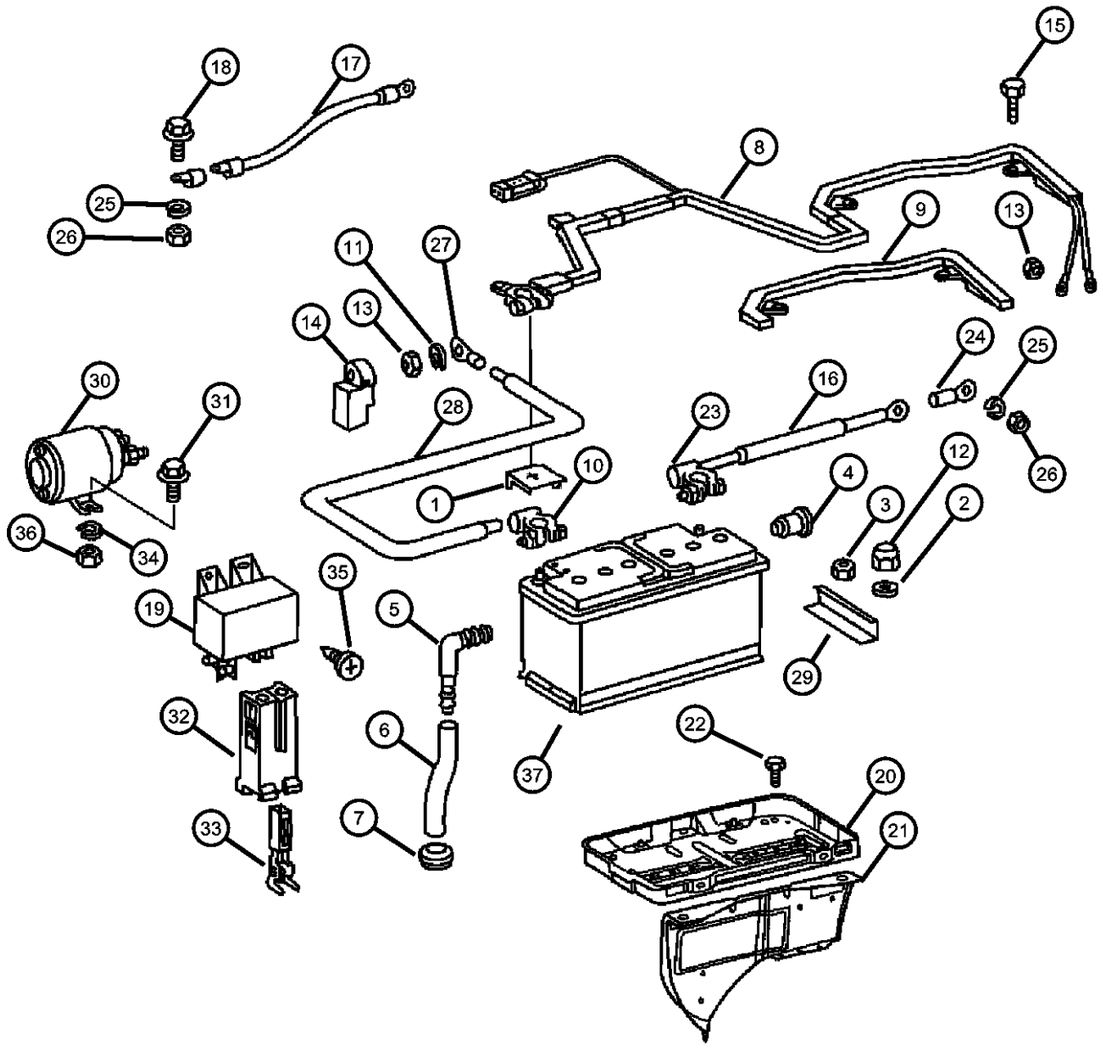

ITEM	PART NUMBER	QTY	LINE	SERIES	BODY	ENGINE	TRANS	TRIM	DESCRIPTION
		100	3, 7	L	12, 15, 16				10 Meters Long
17									STRAP, Ground
	05120226AA	1	2, 6	L	11, 12, 14, 15, 16				
		1	2, 6	L	51, 52, 54, 55, 56				
		1	3, 7	L	12, 15, 16				
18									BOLT
	05126259AB	1	2, 6	L	11, 12, 14, 15, 16				Ground Cable to Fire Wall
		1	2, 6	L	51, 52, 54, 55, 56				Ground Cable to Fire Wall
		1	3, 7	L	12, 15, 16				Ground Cable to Fire Wall
	05126260AA	1	2, 6	L	11, 12, 14, 15, 16				Ground Cable to Body
		1	2, 6	L	51, 52, 54, 55, 56				Ground Cable to Body
		1	3, 7	L	12, 15, 16				Ground Cable to Body
19									RELAY
	05120361AA	1	2, 6	L	11, 12, 14, 15, 16				
		1	2, 6	L	51, 52, 54, 55, 56				
		1	3, 7	L	12, 15, 16				
20									TRAY, Battery
	05104592AA	1	2, 6	L	11, 12, 14, 15, 16				
	0VU01205								Repair Battery Terminal End Top Post (Ten Per Box)
	0VU01207								Repair Battery Terminal End Side Post (Ten Per Box)
	BA049850EX								Mopar Power Pro 6
		1	2, 6	L	51, 52, 54, 55, 56				

SPRINTER (VA)

SERIES	LINE	BODY	ENGINE	TRANSMISSION
L = LOWLINE	3 = HD DODGE 2WD 6 = Lt. Duty DODGE 4WD 2 = Med. Duty DODGE 2WD 7 = Med. Duty DODGE 4WD	55 = Wagon 140" 54 = Wagon 118" 52 = Wagon 140" 51 = Wagon 118" 12 = Van 140" 11 = Van 118" 06 = Front Section 158" 14 = Van 118" 15 = Van 140" 16 = Van 158" 56 = Wagon 158" 01 = Chassis Forward Control 118" 02 = Chassis Forward Control 140"	EX8 = Engine-2.7L I5 Mercedes Turbo Diesel	DGJ = Transmission-5-Spd. Automatic,W5A580

Battery Tray & Cables
Figure 8-1005

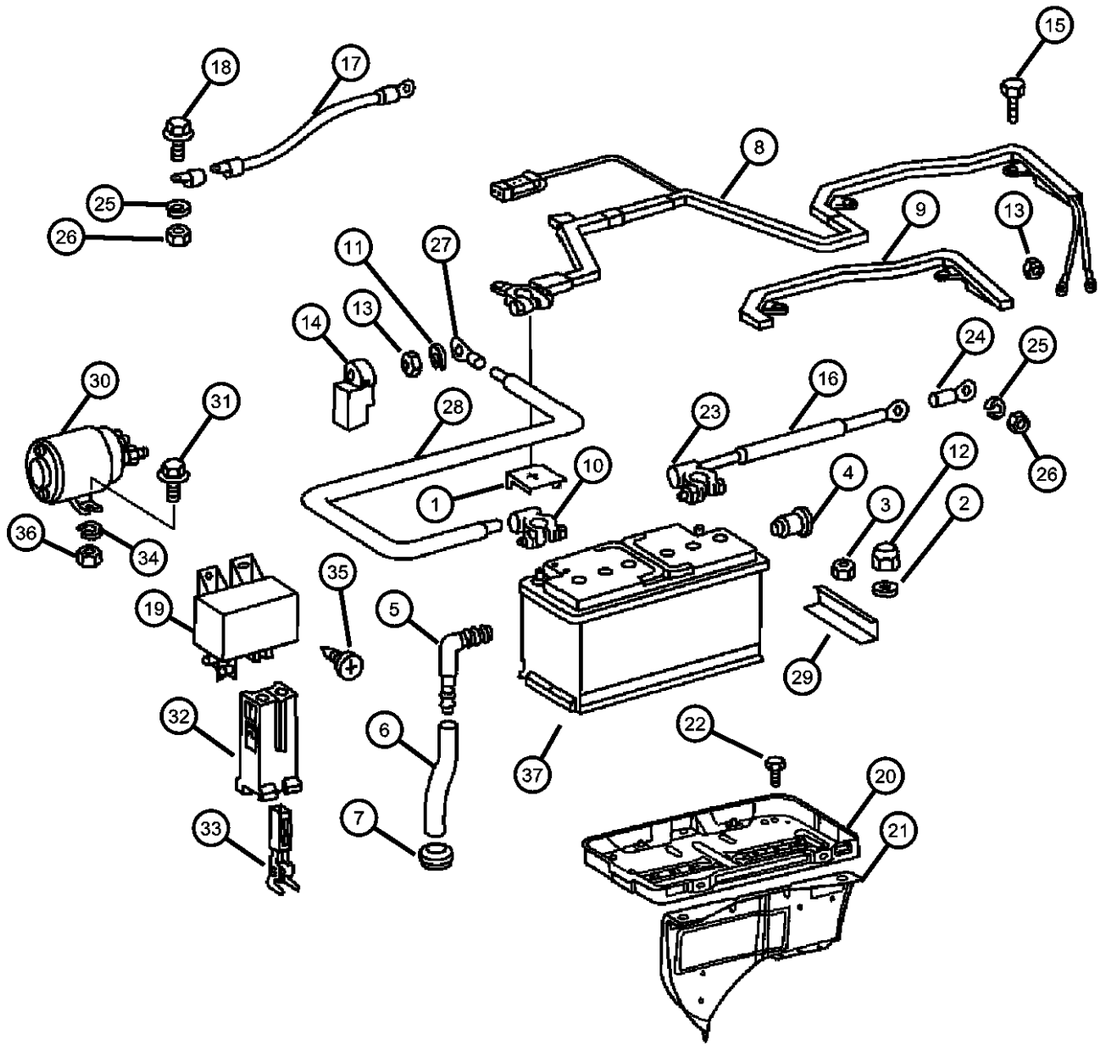

ITEM	PART NUMBER	QTY	LINE	SERIES	BODY	ENGINE	TRANS	TRIM	DESCRIPTION
	0VU01205								Repair Battery Terminal End Top Post (Ten Per Box)
	0VU01207								Repair Battery Terminal End Side Post (Ten Per Box)
	BA049850EX								Mopar Power Pro 6
		1	3, 7	L	12, 15, 16				
	0VU01205								Repair Battery Terminal End Top Post (Ten Per Box)
	0VU01207								Repair Battery Terminal End Side Post (Ten Per Box)
	BA049850EX								Mopar Power Pro 6
21									BRACKET, Battery Tray
	05104157AA	1	2, 6	L	11, 12, 14, 15, 16				
		1	2, 6	L	51, 52, 54, 55, 56				
		1	3, 7	L	12, 15, 16				
22									BOLT, Hex Head
	05126227AA	2	2, 6	L	11, 12, 14, 15, 16				
		2	2, 6	L	56, 51, 52, 54, 55				
		2	3, 7	L	12, 15, 16				
23									TERMINAL, Battery
	05133952AA	1	2, 6	L	01, 02, 06				
		1	2, 6	L	11, 12, 14, 15, 16				
		1	2, 6	L	51, 52, 54, 55, 56				
		1	3, 7	L	12, 16, 15				
24									TERMINAL, Eyelet
	05133953AA	1	2, 6	L	11, 12, 14, 15, 16				
		1	2, 6	L	51, 52, 54, 55, 56				

SPRINTER (VA)

SERIES	LINE	BODY	ENGINE	TRANSMISSION
L = LOWLINE	3 = HD DODGE 2WD 6 = Lt. Duty DODGE 4WD 2 = Med. Duty DODGE 2WD 7 = Med. Duty DODGE 4WD	55 = Wagon 140" 54 = Wagon 118" 52 = Wagon 140" 51 = Wagon 118" 12 = Van 140" 11 = Van 118" 06 = Front Section 158" 14 = Van 118" 15 = Van 140" 16 = Van 158" 56 = Wagon 158" 01 = Chassis Forward Control 118" 02 = Chassis Forward Control 140"	EX8 = Engine-2.7L I5 Mercedes Turbo Diesel	DGJ = Transmission-5-Spd. Automatic,W5A580

Battery Tray & Cables
Figure 8-1005

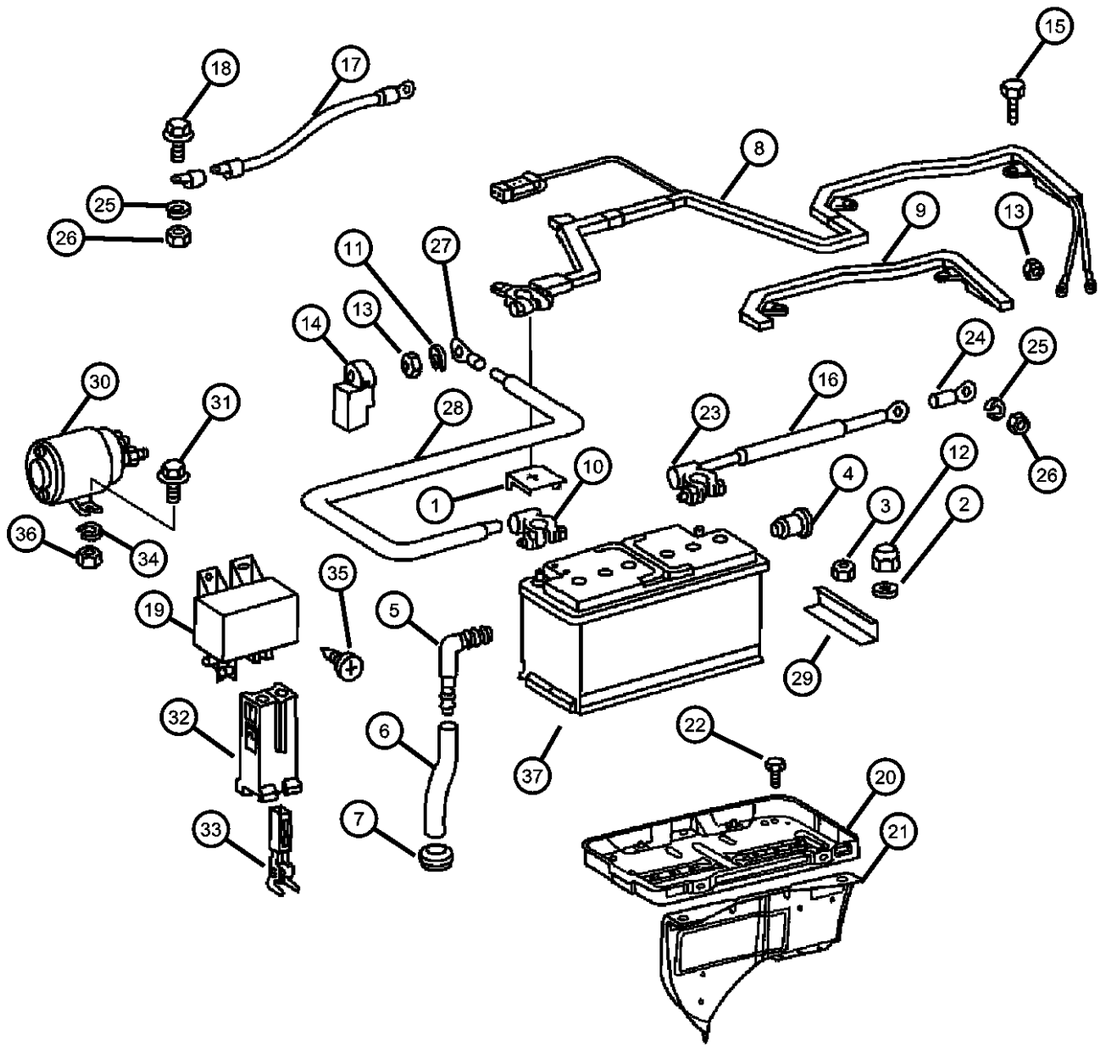

ITEM	PART NUMBER	QTY	LINE	SERIES	BODY	ENGINE	TRANS	TRIM	DESCRIPTION
		1	3, 7	L	12, 15, 16				
25									LOCK WASHER
	05104669AA	1	2, 6	L	11, 12, 14, 15, 16				
		1	2, 6	L	51, 52, 54, 55, 56				
		1	3, 7	L	12, 15, 16				
26									NUT
	05126206AA	99	2, 6	L	01, 02, 06				
		99	2, 6	L	14, 15, 16, 11, 12				
		99	2, 6	L	51, 52, 54, 55, 56				
		99	3, 7	L	12, 15, 16				
27									TERMINAL
	05133950AA	1	2, 6	L	11, 12, 14, 15, 16				
		1	3, 7	L	12, 15, 16				
28									CABLE, Battery Positive
	05133949AA	900	2, 6	L	11, 12, 14, 15, 16				10 Meters Long
		900	2, 6	L	51, 52, 54, 55, 56				10 Meters Long
		900	3, 7	L	12, 15, 16				10 Meters Long
29									RAIL
	05121607AA	2	2, 6	L	11, 12, 14, 15, 16				
		2	2, 6	L	51, 52, 54, 55, 56				
		2	3, 7	L	12, 15, 16				
30									RELAY
	05133946AA	1	2, 6	L	11, 12, 14, 15, 16				

SPRINTER (VA)

SERIES	LINE	BODY	ENGINE	TRANSMISSION
L = LOWLINE	3 = HD DODGE 2WD 6 = Lt. Duty DODGE 4WD 2 = Med. Duty DODGE 2WD 7 = Med. Duty DODGE 4WD	55 = Wagon 140" 54 = Wagon 118" 52 = Wagon 140" 51 = Wagon 118" 12 = Van 140" 11 = Van 118" 06 = Front Section 158" 14 = Van 118" 15 = Van 140" 16 = Van 158" 56 = Wagon 158" 01 = Chassis Forward Control 118" 02 = Chassis Forward Control 140"	EX8 = Engine-2.7L I5 Mercedes Turbo Diesel	DGJ = Transmission-5-Spd. Automatic,W5A580

Battery Tray & Cables
Figure 8-1005

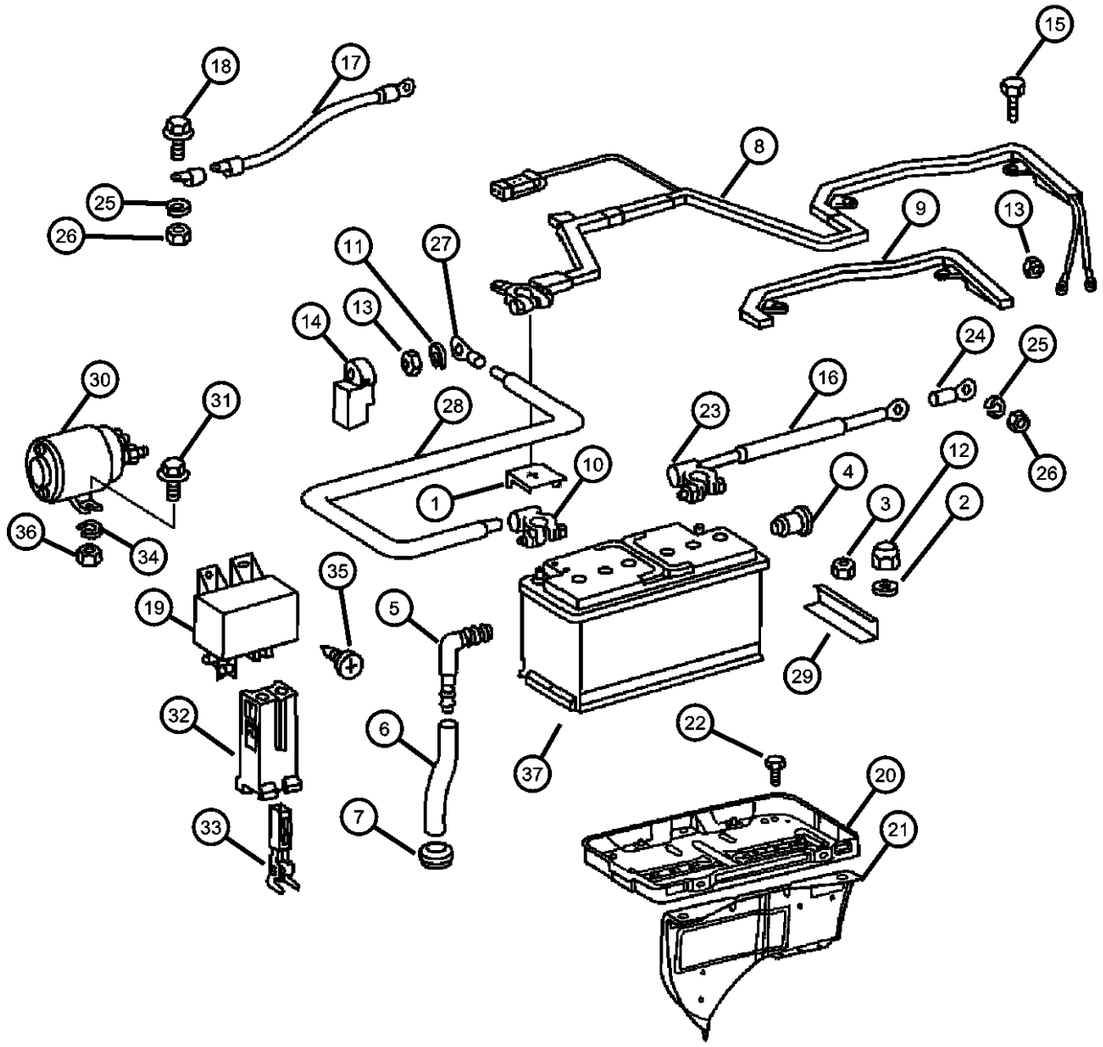

ITEM	PART NUMBER	QTY	LINE	SERIES	BODY	ENGINE	TRANS	TRIM	DESCRIPTION
		1	2, 6	L	51, 52, 54, 55, 56				
		1	3, 7	L	12, 15, 16				
31									BOLT
	05133947AA	2	2, 6	L	11, 12, 14, 15, 16				
		2	2, 6	L	51, 52, 54, 55, 56				
		2	3, 7	L	12, 15, 16				
32									CONNECTOR
	05133944AA	1	2, 6	L	11, 12, 14, 15, 16				
		1	2, 6	L	56, 51, 52, 54, 55				
		1	3, 7	L	12, 15, 16				
33									TERMINAL
	05133945AA	1	2, 6	L	11, 12, 14, 15, 16				
		1	2, 6	L	51, 52, 54, 55, 56				
		2	3, 7	L	12, 15, 16				
34									WASHER, Lock
	05104668AA	2	2, 6	L	11, 12, 14, 15, 16				
		2	2, 6	L	51, 52, 54, 55, 56				
		2	3, 7	L	12, 15, 16				
35									SCREW
	05104609AA	2	2, 6	L	01, 02, 06				
		2	2, 6	L	11, 12, 14, 15, 16				
		2	2, 6	L	51, 52, 54, 55, 56				
		2	3, 7	L	12, 15, 16				

SPRINTER (VA)

SERIES	LINE	BODY	ENGINE	TRANSMISSION
L = LOWLINE	3 = HD DODGE 2WD 6 = Lt. Duty DODGE 4WD 2 = Med. Duty DODGE 2WD 7 = Med. Duty DODGE 4WD	55 = Wagon 140" 54 = Wagon 118" 52 = Wagon 140" 51 = Wagon 118" 12 = Van 140" 11 = Van 118" 06 = Front Section 158" 14 = Van 118" 15 = Van 140" 16 = Van 158" 56 = Wagon 158" 01 = Chassis Forward Control 118" 02 = Chassis Forward Control 140"	EX8 = Engine-2.7L I5 Mercedes Turbo Diesel	DGJ = Transmission-5-Spd. Automatic,W5A580

Battery Tray & Cables
Figure 8-1005

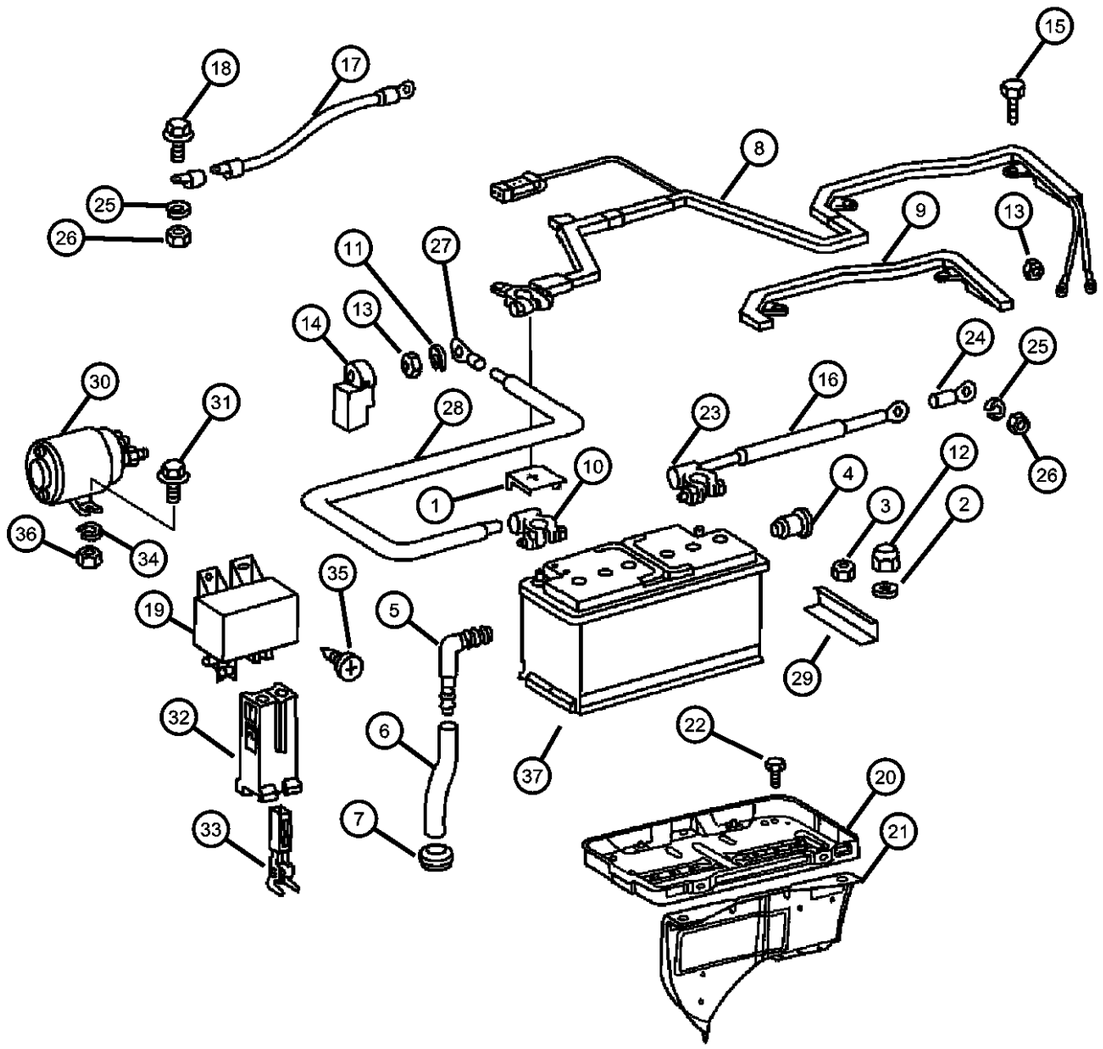

ITEM	PART NUMBER	QTY	LINE	SERIES	BODY	ENGINE	TRANS	TRIM	DESCRIPTION
36									NUT, Hex
	05133948AA	2	2, 6	L	11, 12, 14, 15, 16				
		2	2, 6	L	51, 52, 54, 55, 56				
		2	3, 7	L	12, 15, 16				
37									BATTERY
	05133941AA	1	2, 6	L	01, 02, 06				[BC1] Under seat
	BB049850AA								Mopar Replacement Battery (72 Series)
		1	2, 6	L	11, 12, 14, 15, 16				[BC1] Under seat
	BB049850AA								Mopar Replacement Battery (72 Series)
		1	2, 6	L	51, 52, 54, 55, 56				[BC1] Under seat
	BB049850AA								Mopar Replacement Battery (72 Series)
		1	3, 7	L	02, 06				[BC1] Under seat
	BB049850AA								Mopar Replacement Battery (72 Series)
		1	3, 7	L	12, 15, 16				[BC1] Under seat
	BB049850AA								Mopar Replacement Battery (72 Series)
	BA049850EX	1	2, 6	L	01, 02, 06	EX8			With [BDC]
		1	2, 6	L	11, 12, 14, 15, 16	EX8			With [BDC]
		1	2, 6	L	51, 52, 54, 55, 56	EX8			With [BDC]
		1	3, 7	L	02, 06	EX8			With [BDC]
		1	3, 7	L	12, 15, 16	EX8			With [BDC]
-38									WIRING, Battery
	05127740AA	1	3, 7	L	02, 06	EX9			HAS 2 CONNECTIONS TO GLOWPLUG BOX

SPRINTER (VA)

SERIES	LINE	BODY	ENGINE	TRANSMISSION
L = LOWLINE	3 = HD DODGE 2WD 6 = Lt. Duty DODGE 4WD 2 = Med. Duty DODGE 2WD 7 = Med. Duty DODGE 4WD	55 = Wagon 140" 54 = Wagon 118" 52 = Wagon 140" 51 = Wagon 118" 12 = Van 140" 11 = Van 118" 06 = Front Section 158" 14 = Van 118" 15 = Van 140" 16 = Van 158" 56 = Wagon 158" 01 = Chassis Forward Control 118" 02 = Chassis Forward Control 140"	EX8 = Engine-2.7L I5 Mercedes Turbo Diesel	DGJ = Transmission-5-Spd. Automatic,W5A580

Battery Tray & Cables
Figure 8-1005

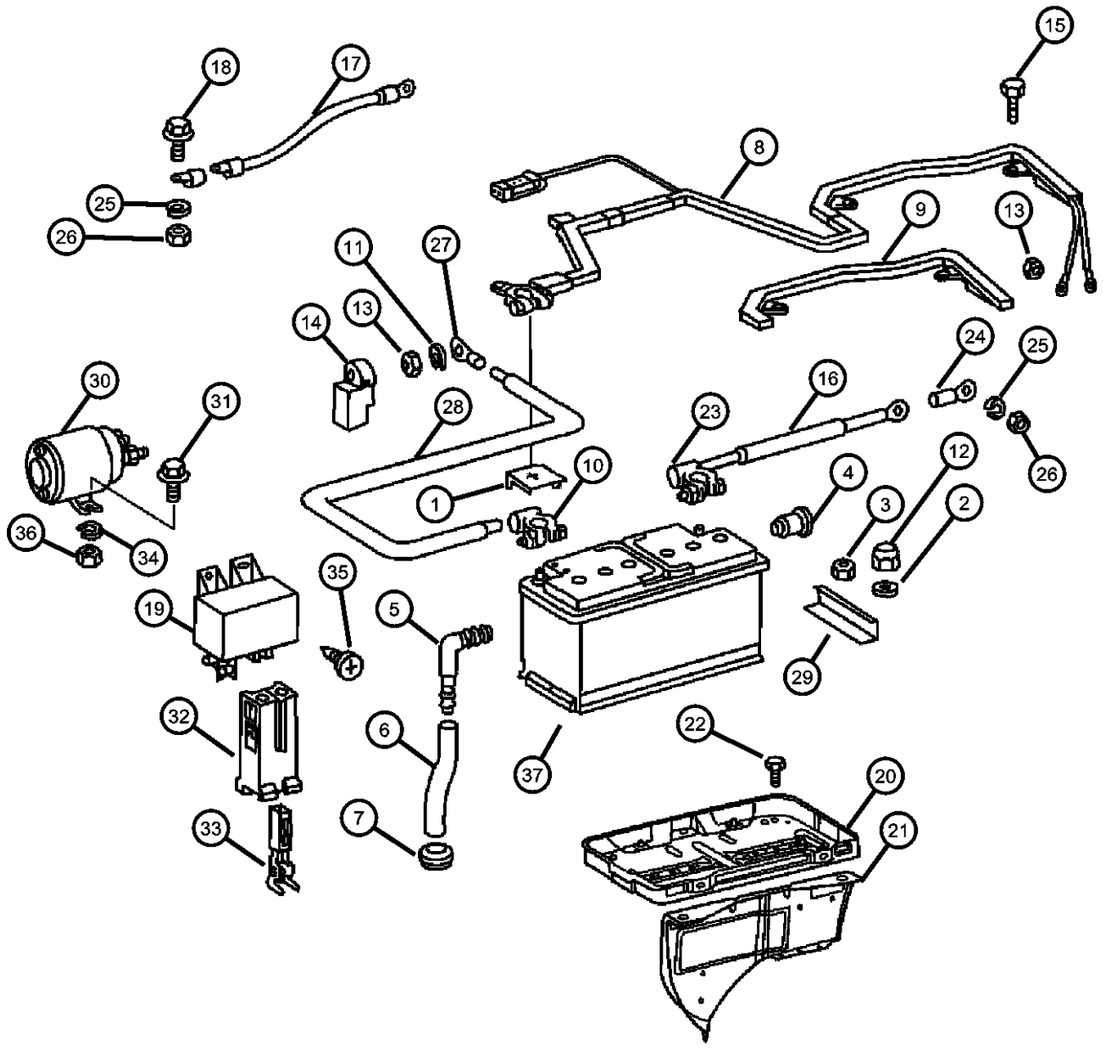

ITEM	PART NUMBER	QTY	LINE	SERIES	BODY	ENGINE	TRANS	TRIM	DESCRIPTION
		1	3, 7	L	12, 15, 16	EX9			HAS 2 CONNECTIONS TO GLOWPLUG BOX
		1	2, 6	L	01, 02, 06	EX9			HAS 2 CONNECTIONS TO GLOWPLUG BOX
		1	2, 6	L	11, 12, 14, 15, 16	EX9			HAS 2 CONNECTIONS TO GLOWPLUG BOX
		1	2, 6	L	51, 52, 54, 55, 56	EX9			HAS 2 CONNECTIONS TO GLOWPLUG BOX

SPRINTER (VA)

SERIES	LINE	BODY	ENGINE	TRANSMISSION
L = LOWLINE	3 = HD DODGE 2WD 6 = Lt. Duty DODGE 4WD 2 = Med. Duty DODGE 2WD 7 = Med. Duty DODGE 4WD	55 = Wagon 140" 54 = Wagon 118" 52 = Wagon 140" 51 = Wagon 118" 12 = Van 140" 11 = Van 118" 06 = Front Section 158" 14 = Van 118" 15 = Van 140" 16 = Van 158" 56 = Wagon 158" 01 = Chassis Forward Control 118" 02 = Chassis Forward Control 140"	EX8 = Engine-2.7L I5 Mercedes Turbo Diesel	DGJ = Transmission-5-Spd. Automatic,W5A580

Lamps - Front End
Figure 8-1105

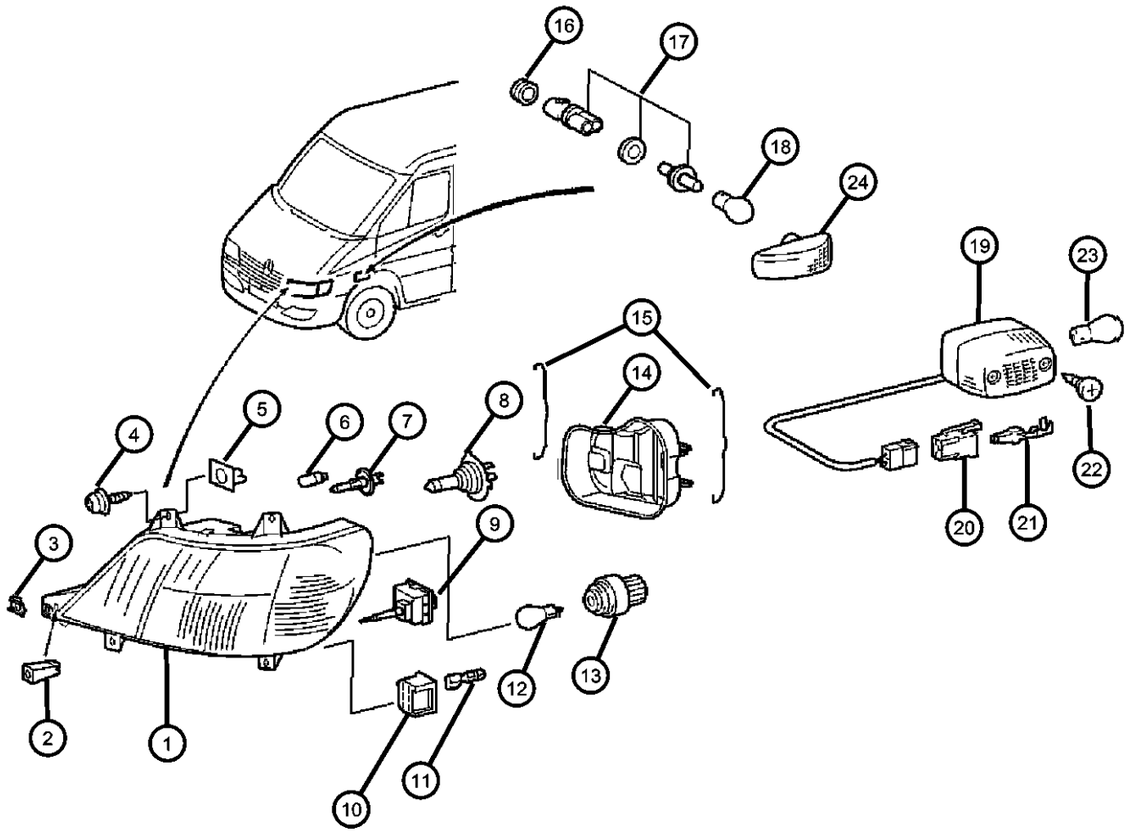

ITEM	PART NUMBER	QTY	LINE	SERIES	BODY	ENGINE	TRANS	TRIM	DESCRIPTION
1									LAMP, Headlamp Park And Turn
	05124503AA	1	2, 6	L	11, 12, 14, 15, 16				[LNJ], Left
	05103598AA	1	6	L	11, 12, 14, 15, 16				[MGQ], Left
		1	6	L	51, 52, 54, 55, 56				[MGQ], Left
		1	7	L	12, 15, 16				[MGQ], Left
	05103599AA	1	6	L	11, 12, 14, 15, 16				[MGQ], Right
		1	6	L	51, 52, 54, 55, 56				[MGQ], Right
		1	7	L	12, 15, 16				[MGQ], Right
	05124526AA	1	3	L	12, 15, 16				[MG4], Left
		1	2, 6	L	51, 52, 54, 55, 56				[LNJ], Left
		1	3, 7	L	12, 15, 16				[LNJ], Left
	05124505AA	1	2, 6	L	11, 12, 14, 15, 16				[LNJ], Right
		1	2, 6	L	51, 52, 54, 55, 56				[LNJ], Right
		1	3, 7	L	12, 15, 16				[LNJ], Right
		1	2	L	11, 12, 14, 15, 16				[MG4], Left
		1	2	L	51, 52, 54, 55, 56				[MG4], Left
	05124528AA	1	2	L	11, 12, 14, 15, 16				[MG4], Right
		1	2	L	51, 52, 54, 55, 56				[MG4], Right
		1	3	L	12, 15, 16				[MG4], Right
	05124529AA	1	2	L	01, 02, 06				[MG4,LNJ], Left
		1	2	L	11, 12, 14, 15, 16				[MG4,LNJ], Left
		1	2	L	51, 52, 54, 55, 56				[MG4,LNJ], Left
		1	3	L	02, 06				[MG4,LNJ], Left

SPRINTER (VA)

SERIES	LINE	BODY	ENGINE	TRANSMISSION
L = LOWLINE	3 = HD DODGE 2WD 6 = Lt. Duty DODGE 4WD 2 = Med. Duty DODGE 2WD 7 = Med. Duty DODGE 4WD	55 = Wagon 140" 54 = Wagon 118" 52 = Wagon 140" 51 = Wagon 118" 12 = Van 140" 11 = Van 118" 06 = Front Section 158" 14 = Van 118" 15 = Van 140" 16 = Van 158" 56 = Wagon 158" 01 = Chassis Forward Control 118" 02 = Chassis Forward Control 140"	EX8 = Engine-2.7L I5 Mercedes Turbo Diesel	DGJ = Transmission-5-Spd. Automatic,W5A580

AR = use ase required - = Non illustrrated part

Lamps - Front End
Figure 8-1105

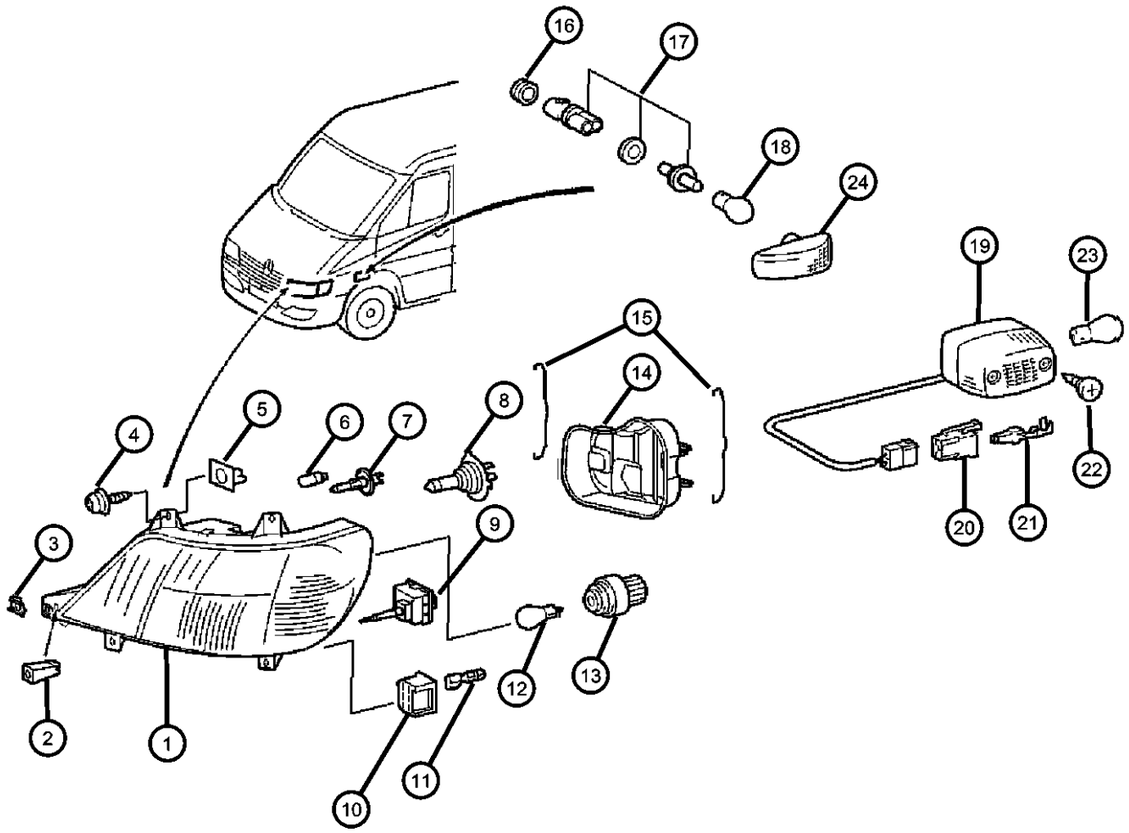

ITEM	PART NUMBER	QTY	LINE	SERIES	BODY	ENGINE	TRANS	TRIM	DESCRIPTION
		1	3	L	12, 15, 16				[MG4,LNJ], Left
	05124531AA	1	2	L	01, 02, 06				[MG4,LNJ], Right
		1	2	L	11, 12, 14, 15, 16				[MG4,LNJ], Right
		1	3	L	02, 06				[MG4,LNJ], Right
		1	3	L	12, 15, 16				[MG4,LNJ], Right
		1	2	L	51, 52, 54, 55, 56				[MG4,LNJ], Right
2									NUT, Push In
	05103784AA	2	2, 6	L	11, 12, 14, 15, 16				
		2	2, 6	L	51, 52, 54, 55, 56				
		2	3, 7	L	12, 15, 16				
3									NUT, Spring U Type
	05103850AA	2	2, 6	L	11, 12, 14, 15, 16				
		2	2, 6	L	51, 52, 54, 55, 56				
		2	3, 7	L	12, 15, 16				
4									SCREW
	06104614AA	8	3, 7	L	12, 15, 16				
		8	2, 6	L	01, 02, 06				
		8	2, 6	L	11, 12, 14, 15, 16				
		8	2, 6	L	51, 52, 54, 55, 56				
5									NUT, Plastic Snap-in
	05098837AA	8	2, 6	L	11, 12, 14, 15, 16				
		8	2, 6	L	51, 52, 54, 55, 56				
		8	3, 7	L	12, 15, 16				

SPRINTER (VA)

SERIES	LINE	BODY	ENGINE	TRANSMISSION
L = LOWLINE	3 = HD DODGE 2WD 6 = Lt. Duty DODGE 4WD 2 = Med. Duty DODGE 2WD 7 = Med. Duty DODGE 4WD	55 = Wagon 140" 54 = Wagon 118" 52 = Wagon 140" 51 = Wagon 118" 12 = Van 140" 11 = Van 118" 06 = Front Section 158" 14 = Van 118" 15 = Van 140" 16 = Van 158" 56 = Wagon 158" 01 = Chassis Forward Control 118" 02 = Chassis Forward Control 140"	EX8 = Engine-2.7L I5 Mercedes Turbo Diesel	DGJ = Transmission-5-Spd. Automatic,W5A580

Lamps - Front End
Figure 8-1105

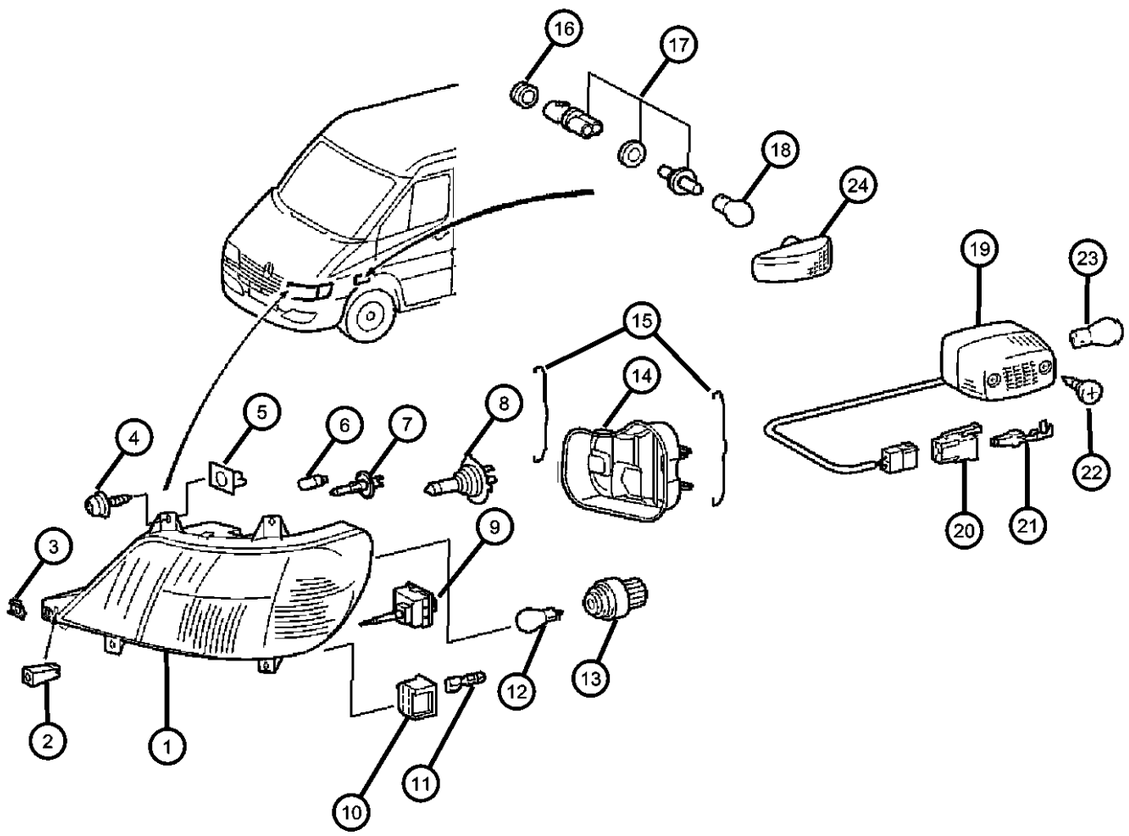

ITEM	PART NUMBER	QTY	LINE	SERIES	BODY	ENGINE	TRANS	TRIM	DESCRIPTION
6									BULB, 12V 5W
	05104608AA	2	2, 6	L	11, 12, 14, 15, 16				
		2	2, 6	L	51, 52, 54, 55, 56				
	05096968AA	2	3, 7	L	15, 16, 12				
7									BULB, Fog Lamp, H-3 55 WATT
	05133960AB	2	2, 6	L	11, 12, 14, 15, 16				
		2	2, 6	L	51, 52, 54, 55, 56				
		2	3, 7	L	12, 15, 16				
8									BULB, Headlamp, H-7
	05104684AA	2	2, 6	L	11, 12, 14, 15, 16				
		2	2, 6	L	51, 52, 54, 55, 56				
		2	3, 7	L	12, 15, 16				
9									MOTOR, Headlamp Leveling
	05103688AA	2	2, 6	L	11, 12, 14, 15, 16				
		2	2, 6	L	56, 51, 52, 54, 55				
		2	3, 7	L	12, 15, 16				
10									CONNECTOR
	05103896AA	1	3, 7	L	12, 15, 16				
		1	2, 6	L	11, 12, 14, 15, 16				
		1	2, 6	L	51, 52, 54, 55, 56				
11									CONTACT SPRING, "0, 5-1, 0 MM2 0,5-1,0 MM2", SPRINTER
	05103898AA	1	2, 6	L	11, 12, 14, 15, 16				

SPRINTER (VA)

SERIES	LINE	BODY	ENGINE	TRANSMISSION
L = LOWLINE	3 = HD DODGE 2WD 6 = Lt. Duty DODGE 4WD 2 = Med. Duty DODGE 2WD 7 = Med. Duty DODGE 4WD	55 = Wagon 140" 54 = Wagon 118" 52 = Wagon 140" 51 = Wagon 118" 12 = Van 140" 11 = Van 118" 06 = Front Section 158" 14 = Van 118" 15 = Van 140" 16 = Van 158" 56 = Wagon 158" 01 = Chassis Forward Control 118" 02 = Chassis Forward Control 140"	EX8 = Engine-2.7L I5 Mercedes Turbo Diesel	DGJ = Transmission-5-Spd. Automatic,W5A580

Lamps - Front End
Figure 8-1105

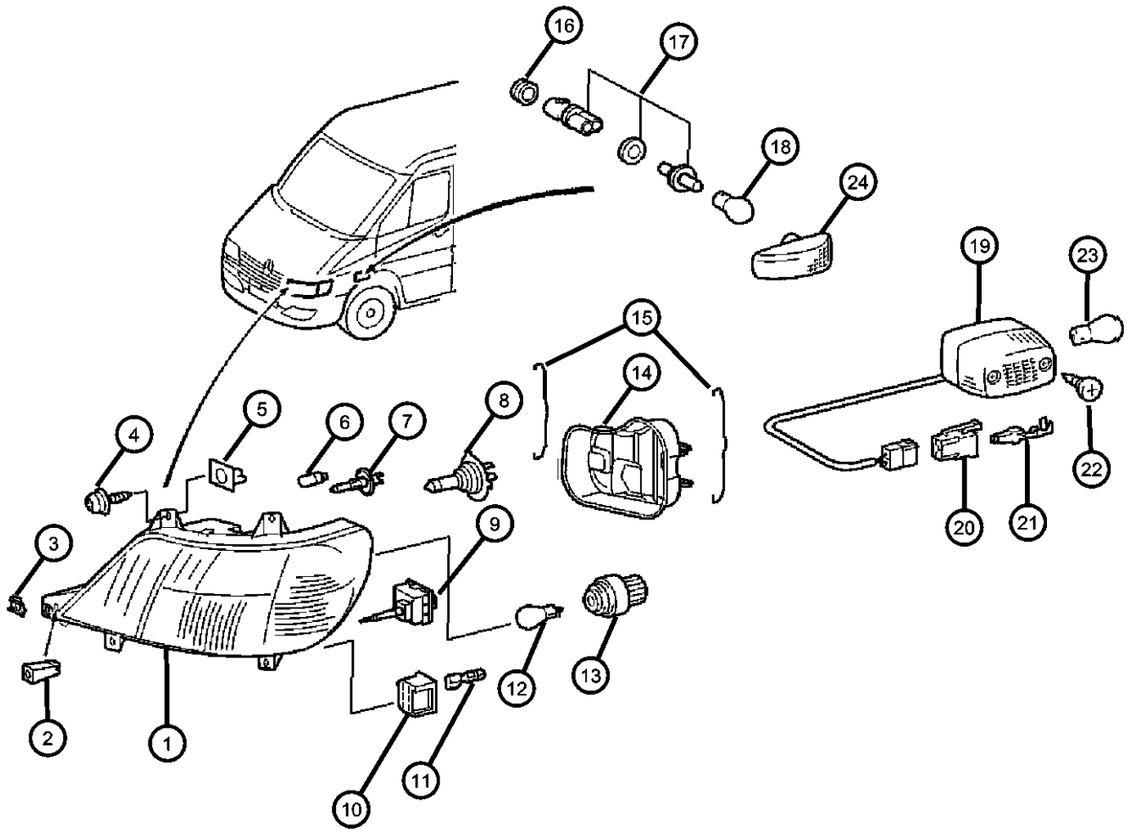

ITEM	PART NUMBER	QTY	LINE	SERIES	BODY	ENGINE	TRANS	TRIM	DESCRIPTION
		1	2, 6	L	51, 52, 54, 55, 56				
		99	3, 7	L	12, 15, 16				
12									BULB
	05104662AA	2	2, 6	L	11, 12, 14, 15, 16				
		2	2, 6	L	51, 52, 54, 55, 56				
		2	3, 7	L	12, 15, 16				
13									SOCKET, Lamp
	05103769AA	2	2, 6	L	11, 12, 14, 15, 16				
		2	2, 6	L	51, 52, 54, 55, 56				
		2	3, 7	L	12, 15, 16				
14									COVER, Lamp
	05103685AA	1	2, 6	L	11, 12, 14, 15, 16				
		1	2, 6	L	51, 52, 54, 55, 56				
		1	3, 7	L	12, 15, 16				
15									SPRING, Retainer
	05103681AA	2	2, 6	L	51, 52, 54, 55, 56				Inside of Lamp
		2	2, 6	L	11, 12, 14, 15, 16				Inside of Lamp
	05103682AA	2	3, 7	L	12, 15, 16				Outside of Lamp
		2	3, 7	L	12, 15, 16				Inside of Lamp
		2	2, 6	L	11, 12, 14, 15, 16				Outside of Lamp
		2	2, 6	L	51, 52, 54, 55, 56				Outside of Lamp
16	05133964AA	2	3, 7	L	12, 15, 16				GROMMET, Lamp
17									SOCKET

SPRINTER (VA)

SERIES	LINE	BODY	ENGINE	TRANSMISSION
L = LOWLINE	3 = HD DODGE 2WD 6 = Lt. Duty DODGE 4WD 2 = Med. Duty DODGE 2WD 7 = Med. Duty DODGE 4WD	55 = Wagon 140" 54 = Wagon 118" 52 = Wagon 140" 51 = Wagon 118" 12 = Van 140" 11 = Van 118" 06 = Front Section 158" 14 = Van 118" 15 = Van 140" 16 = Van 158" 56 = Wagon 158" 01 = Chassis Forward Control 118" 02 = Chassis Forward Control 140"	EX8 = Engine-2.7L I5 Mercedes Turbo Diesel	DGJ = Transmission-5-Spd. Automatic,W5A580

Lamps - Front End
Figure 8-1105

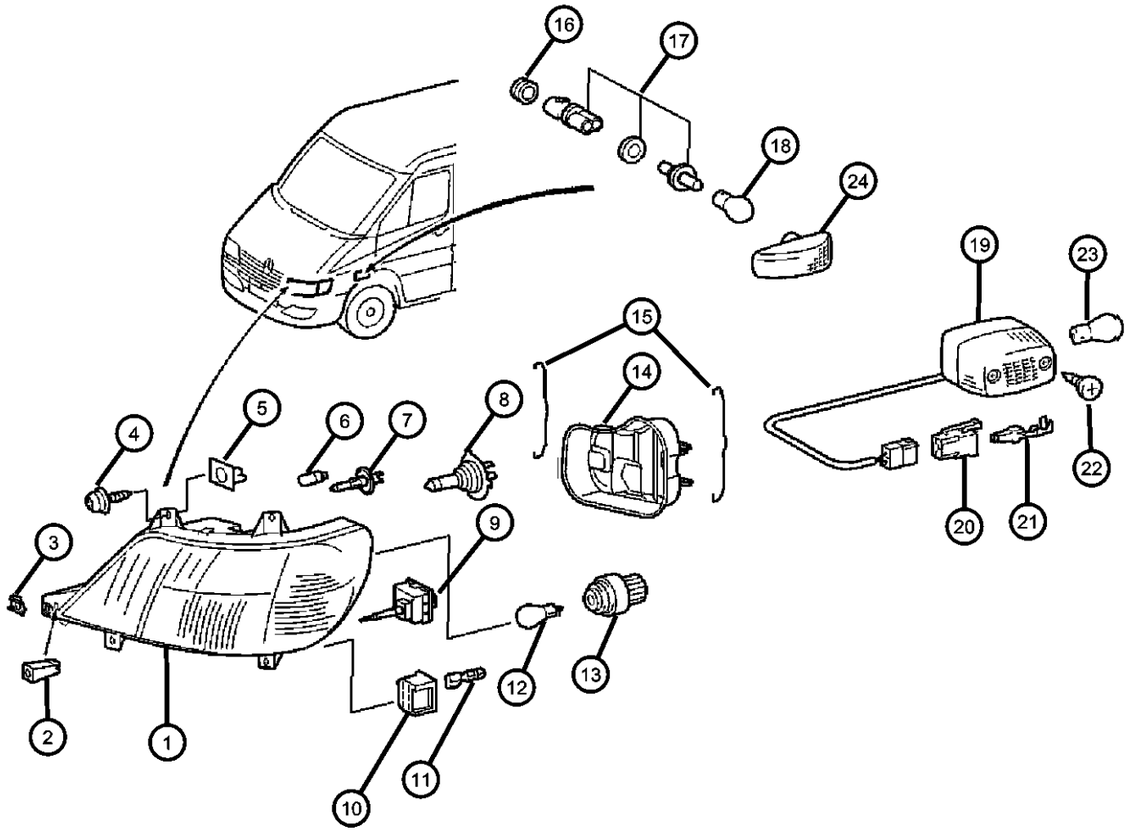

ITEM	PART NUMBER	QTY	LINE	SERIES	BODY	ENGINE	TRANS	TRIM	DESCRIPTION
	05103655AA	1	2, 6	L	01, 02, 06				
		1	2, 6	L	11, 12, 14, 15, 16				
		1	2, 6	L	51, 52, 54, 55, 56				
		1	3, 7	L	15, 16, 12				
18									BULB, 12V 5W
	05104648AA	2	2, 6	L	11, 12, 14, 15, 16				
		2	2, 6	L	51, 52, 54, 55, 56				
		2	2, 6	L	01, 02, 06				
		99	3, 7	L	12, 15, 16				
19									LAMP, Turn Signal
	05103935AA	2	2, 6	L	01, 02, 06				
		2	2, 6	L	11, 12, 14, 15, 16				
		2	2, 6	L	51, 52, 54, 55, 56				
		2	3, 7	L	02, 06				
	05124426AA	1	2, 6	L	01, 02, 06				[LEH]
		1	2, 6	L	11, 12, 14, 15, 16				[LEH]
		1	2, 6	L	51, 52, 54, 55, 56				[LEH]
		1	3, 7	L	02, 06				[LEH]
20									CONNECTOR
	05120679AA	1	2, 6	L	11, 12, 14, 15, 16				
		1	2, 6	L	55, 56, 51, 52, 54				
		1	3, 7	L	12, 15, 16				
21									TERMINAL

SPRINTER (VA)

SERIES	LINE	BODY	ENGINE	TRANSMISSION
L = LOWLINE	3 = HD DODGE 2WD 6 = Lt. Duty DODGE 4WD 2 = Med. Duty DODGE 2WD 7 = Med. Duty DODGE 4WD	55 = Wagon 140" 54 = Wagon 118" 52 = Wagon 140" 51 = Wagon 118" 12 = Van 140" 11 = Van 118" 06 = Front Section 158" 14 = Van 118" 15 = Van 140" 16 = Van 158" 56 = Wagon 158" 01 = Chassis Forward Control 118" 02 = Chassis Forward Control 140"	EX8 = Engine-2.7L I5 Mercedes Turbo Diesel	DGJ = Transmission-5-Spd. Automatic,W5A580

Lamps - Front End
Figure 8-1105

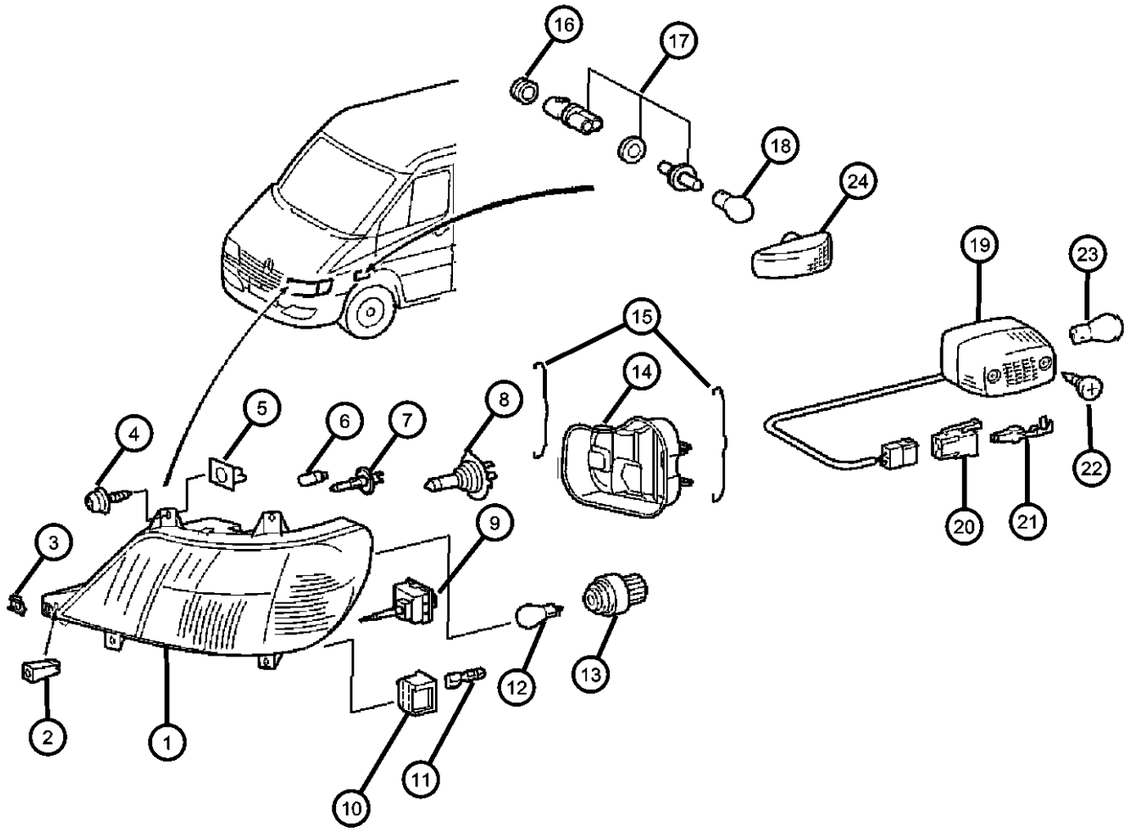

ITEM	PART NUMBER	QTY	LINE	SERIES	BODY	ENGINE	TRANS	TRIM	DESCRIPTION
	05103881AA	1	2, 6	L	51, 52, 54, 55, 56				
		1	3, 7	L	12, 15, 16				
		1	2, 6	L	11, 12, 14, 15, 16				
22									SCREW
	06104498AA	4	2, 6	L	11, 12, 14, 15, 16				
		4	2, 6	L	01, 02, 06				
		4	2, 6	L	51, 52, 54, 55, 56				
		4	3, 7	L	12, 15, 16				
23									BULB
	05104646AA	4	2, 6	L	11, 12, 14, 15, 16				
		4	2, 6	L	51, 52, 54, 55, 56				
		4	3, 7	L	12, 15, 16				
24									LAMP, Side Repeater
	05124431AA	2	2, 6	L	01, 02, 06				
		2	3, 7	L	12, 15, 16				
		2	2, 6	L	11, 12, 14, 15, 16				
		2	2, 6	L	52, 54, 55, 56, 51				

SPRINTER (VA)

SERIES	LINE	BODY	ENGINE	TRANSMISSION
L = LOWLINE	3 = HD DODGE 2WD 6 = Lt. Duty DODGE 4WD 2 = Med. Duty DODGE 2WD 7 = Med. Duty DODGE 4WD	55 = Wagon 140" 54 = Wagon 118" 52 = Wagon 140" 51 = Wagon 118" 12 = Van 140" 11 = Van 118" 06 = Front Section 158" 14 = Van 118" 15 = Van 140" 16 = Van 158" 56 = Wagon 158" 01 = Chassis Forward Control 118" 02 = Chassis Forward Control 140"	EX8 = Engine-2.7L I5 Mercedes Turbo Diesel	DGJ = Transmission-5-Spd. Automatic,W5A580

Lamps - Rear End
Figure 8-1110

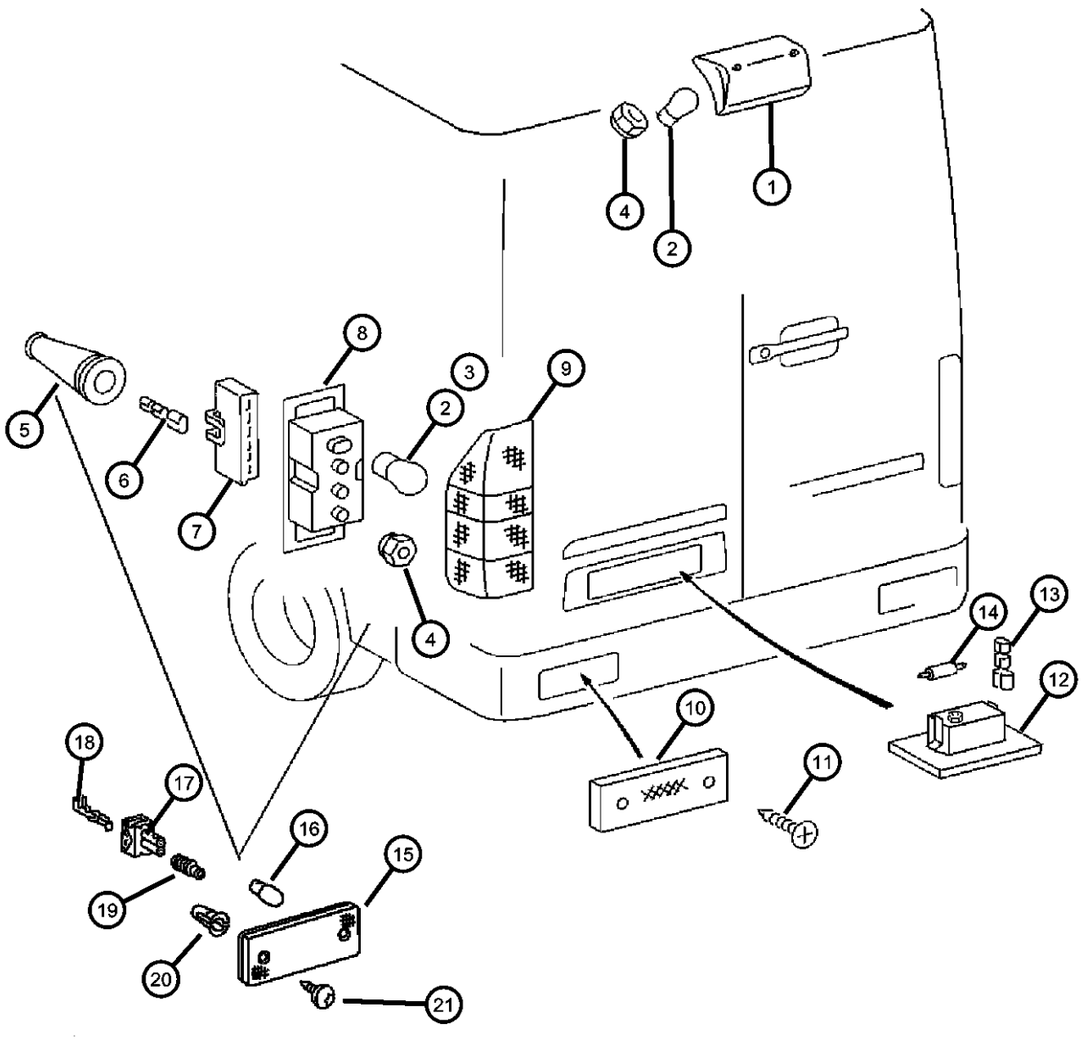

ITEM	PART NUMBER	QTY	LINE	SERIES	BODY	ENGINE	TRANS	TRIM	DESCRIPTION
1									LAMP, Center High Mounted Stop
	05103804AA	1	2, 6	L	11, 12, 14, 15, 16				
		1	2, 6	L	51, 52, 54, 55, 56				
		1	3, 7	L	12, 15, 16				
2									BULB
	05104646AA	1	2, 6	L	51, 52, 54, 55, 56				Single fillament
		1	2, 6	L	06, 01, 02				Single fillament
		1	2, 6	L	11, 12, 14, 15, 16				Single fillament
		2	3, 7	L	02, 06				Single fillament
		1	3, 7	L	12, 15, 16				Single fillament
3									BULB, TAIL LAMP
	05104647AA	2	2, 6	L	11, 12, 14, 15, 16				Double fillament
		2	2, 6	L	51, 52, 54, 55, 56				Double fillament
		2	3, 7	L	12, 15, 16				Double fillament
4									NUT, M5
	06104707AA	2	2, 6	L	11, 12, 14, 15, 16				
		2	2, 6	L	51, 52, 54, 55, 56				
		2	3, 7	L	12, 15, 16				
5									GROMMET, GROMMET
	05133963AA	1	2, 6	L	11, 12, 14, 15, 16				
		1	2, 6	L	51, 52, 54, 55, 56				
		1	3, 7	L	12, 15, 16				
6									TERMINAL, Female
	05133956AA	99	2, 6	L	11, 12, 14, 15, 16				

SPRINTER (VA)

SERIES	LINE	BODY	ENGINE	TRANSMISSION
L = LOWLINE	3 = HD DODGE 2WD 6 = Lt. Duty DODGE 4WD 2 = Med. Duty DODGE 2WD 7 = Med. Duty DODGE 4WD	55 = Wagon 140" 54 = Wagon 118" 52 = Wagon 140" 51 = Wagon 118" 12 = Van 140" 11 = Van 118" 06 = Front Section 158" 14 = Van 118" 15 = Van 140" 16 = Van 158" 56 = Wagon 158" 01 = Chassis Forward Control 118" 02 = Chassis Forward Control 140"	EX8 = Engine-2.7L I5 Mercedes Turbo Diesel	DGJ = Transmission-5-Spd. Automatic,W5A580

Lamps - Rear End
Figure 8-1110

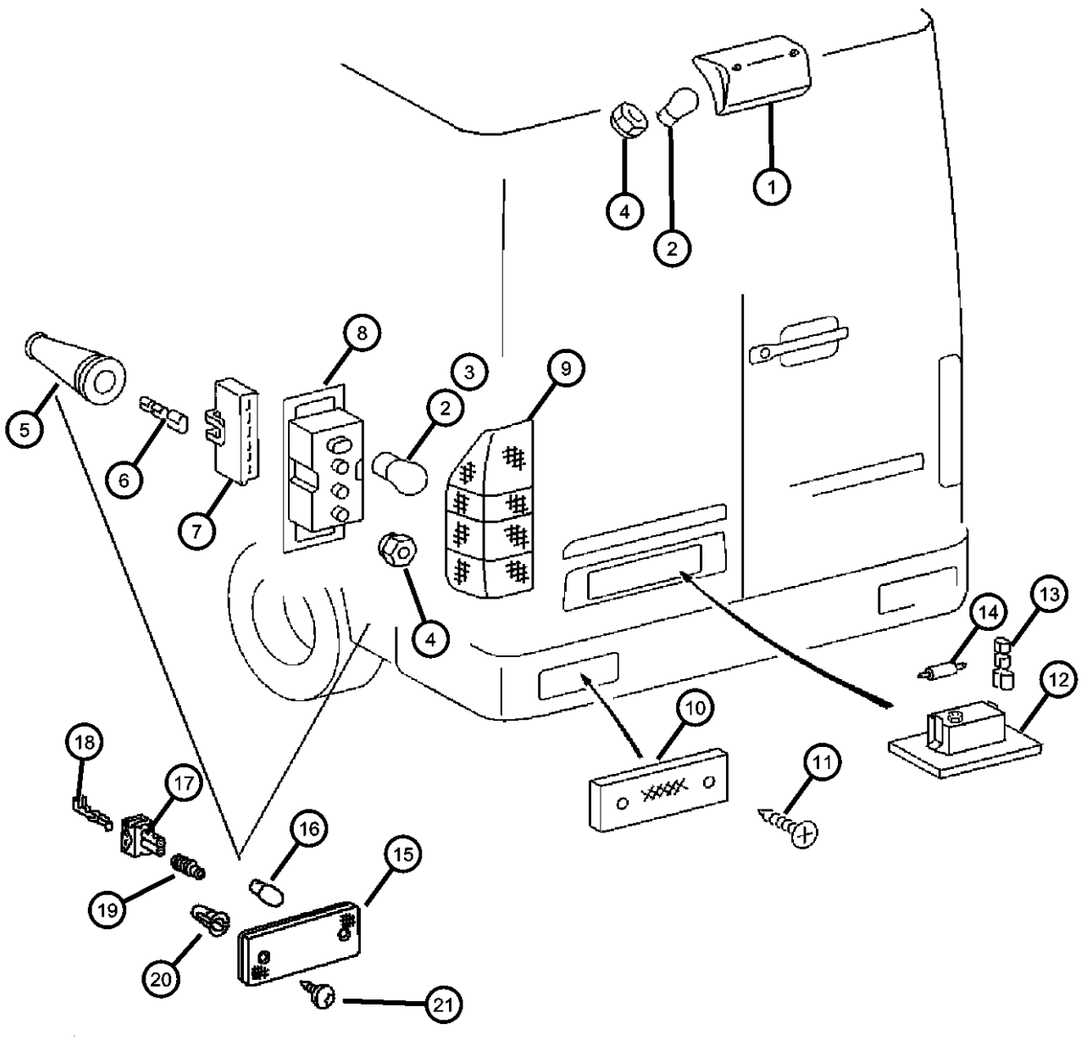

ITEM	PART NUMBER	QTY	LINE	SERIES	BODY	ENGINE	TRANS	TRIM	DESCRIPTION
		99	2, 6	L	51, 52, 54, 55, 56				
		99	3, 7	L	12, 15, 16				
7									CONNECTOR
	05120543AA	1	3, 7	L	12, 15, 16				
		1	2, 6	L	12, 14, 15, 16, 11				
		1	2, 6	L	51, 52, 54, 55, 56				
8									LAMP, Tail Stop Turn
	05103596AA	1							Left
	05103597AA	1							Right
9	05103597AA	1							LENS, Taillamp, Serviced in Lamp Assembly, (NOT SERVICED)
10									REFLECTOR, Fascia
	05103684AA	2	2, 6	L	11, 12, 14, 15, 16				
		2	2, 6	L	51, 52, 54, 55, 56				
		2	3, 7	L	12, 15, 16				
11									SCREW
	06104498AA	4	2, 6	L	11, 12, 14, 15, 16				
		4	2, 6	L	51, 52, 54, 55, 56				
		4	2, 6	L	01, 02, 06				
		4	3, 7	L	12, 15, 16				
12									LAMP, License Plate
	05104462AA	2	2, 6	L	51, 52, 54, 55, 56				
		2	3, 7	L	12, 15, 16				
		2	2, 6	L	11, 12, 14, 15, 16				

SPRINTER (VA)

SERIES	LINE	BODY	ENGINE	TRANSMISSION
L = LOWLINE	3 = HD DODGE 2WD 6 = Lt. Duty DODGE 4WD 2 = Med. Duty DODGE 2WD 7 = Med. Duty DODGE 4WD	55 = Wagon 140" 54 = Wagon 118" 52 = Wagon 140" 51 = Wagon 118" 12 = Van 140" 11 = Van 118" 06 = Front Section 158" 14 = Van 118" 15 = Van 140" 16 = Van 158" 56 = Wagon 158" 01 = Chassis Forward Control 118" 02 = Chassis Forward Control 140"	EX8 = Engine-2.7L I5 Mercedes Turbo Diesel	DGJ = Transmission-5-Spd. Automatic,W5A580

Lamps - Rear End
Figure 8-1110

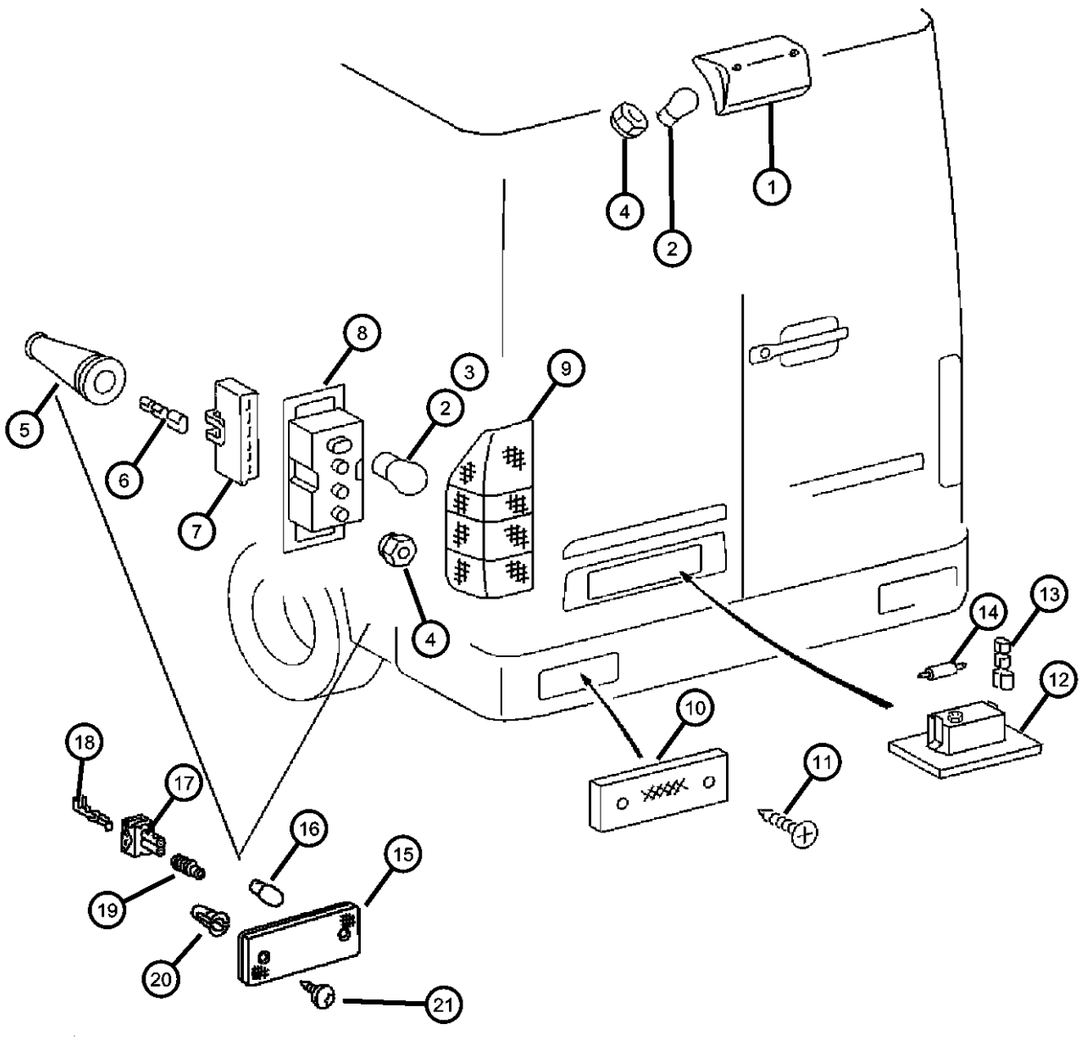

ITEM	PART NUMBER	QTY	LINE	SERIES	BODY	ENGINE	TRANS	TRIM	DESCRIPTION
	05124473AA	1	2, 6	L	14, 15, 16, 11, 12				
		1	2, 6	L	51, 52, 54, 55, 56				
		1	3, 7	L	12, 15, 16				
13									BULB, 12V 5W
	05096968AA	2	2, 6	L	11, 12, 14, 15, 16				
		2	2, 6	L	51, 52, 54, 55, 56				
		2	3, 7	L	12, 15, 16				
14									TERMINAL, Female
	05133927AA	99	2, 6	L	11, 12, 14, 15, 16				
		99	2, 6	L	51, 52, 54, 55, 56				
		99	3, 7	L	12, 15, 16				
15									LAMP, Side Marker
	05124477AA	6	2, 6	L	16				
		4	2, 6	L	11, 12, 14, 15, 16				
		6	2, 6	L	56				
		4	2, 6	L	51, 52, 54, 55, 56				
		4	3, 7	L	12, 15				
16									BULB
	05104649AA	2	2, 6	L	11, 12, 14, 15, 16				
		2	2, 6	L	51, 52, 54, 55, 56				
		2	3, 7	L	12, 15, 16				
	05120589AA	1	2, 6	L	01, 02, 06				
17									CONNECTOR

SPRINTER (VA)

SERIES	LINE	BODY	ENGINE	TRANSMISSION
L = LOWLINE	3 = HD DODGE 2WD 6 = Lt. Duty DODGE 4WD 2 = Med. Duty DODGE 2WD 7 = Med. Duty DODGE 4WD	55 = Wagon 140" 54 = Wagon 118" 52 = Wagon 140" 51 = Wagon 118" 12 = Van 140" 11 = Van 118" 06 = Front Section 158" 14 = Van 118" 15 = Van 140" 16 = Van 158" 56 = Wagon 158" 01 = Chassis Forward Control 118" 02 = Chassis Forward Control 140"	EX8 = Engine-2.7L I5 Mercedes Turbo Diesel	DGJ = Transmission-5-Spd. Automatic,W5A580

Lamps - Rear End
Figure 8-1110

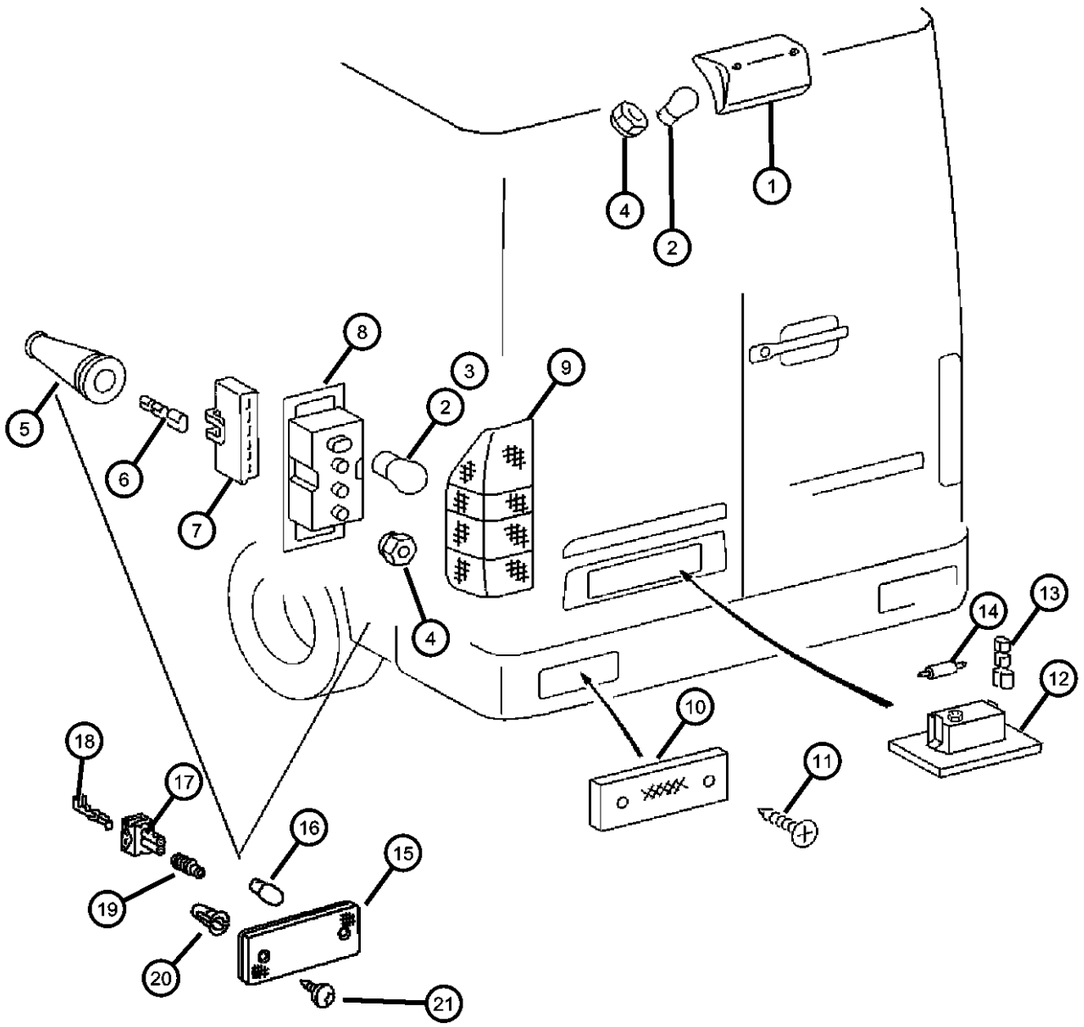

ITEM	PART NUMBER	QTY	LINE	SERIES	BODY	ENGINE	TRANS	TRIM	DESCRIPTION
	05103879AA	1	2, 6	L	01, 02, 06				
		1	2, 6	L	11, 12, 14, 15, 16				
		1	2, 6	L	51, 52, 54, 55, 56				
		1	3, 7	L	02, 06				
18									TERMINAL
	05102935AA	1	2, 6	L	01, 02, 06				
		99	2, 6	L	11, 12, 14, 15, 16				
		99	2, 6	L	51, 52, 54, 55, 56				
		99	3, 7	L	02, 06				
19									GASKET
	05103661AA	1	2, 6	L	01, 02, 06				
		1	2, 6	L	11, 12, 14, 15, 16				
		99	2, 6	L	51, 52, 54, 55, 56				
		99	3, 7	L	02, 06				
20									NUT, Push In
	05103841AA	8	2, 6	L	11, 12, 14, 15				
		8	3, 7	L	12, 15				
		8	3, 7	L	16				
		8	2, 6	L	16				
		8	2, 6	L	51, 52, 54, 55				
		8	2, 6	L	56				
21									SCREW
	06104498AA	8	2, 6	L	11, 12, 14, 15				
		8	2, 6	L	16				

SPRINTER (VA)

SERIES	LINE	BODY	ENGINE	TRANSMISSION
L = LOWLINE	3 = HD DODGE 2WD 6 = Lt. Duty DODGE 4WD 2 = Med. Duty DODGE 2WD 7 = Med. Duty DODGE 4WD	55 = Wagon 140" 54 = Wagon 118" 52 = Wagon 140" 51 = Wagon 118" 12 = Van 140" 11 = Van 118" 06 = Front Section 158" 14 = Van 118" 15 = Van 140" 16 = Van 158" 56 = Wagon 158" 01 = Chassis Forward Control 118" 02 = Chassis Forward Control 140"	EX8 = Engine-2.7L I5 Mercedes Turbo Diesel	DGJ = Transmission-5-Spd. Automatic,W5A580

Lamps - Rear End
Figure 8-1110

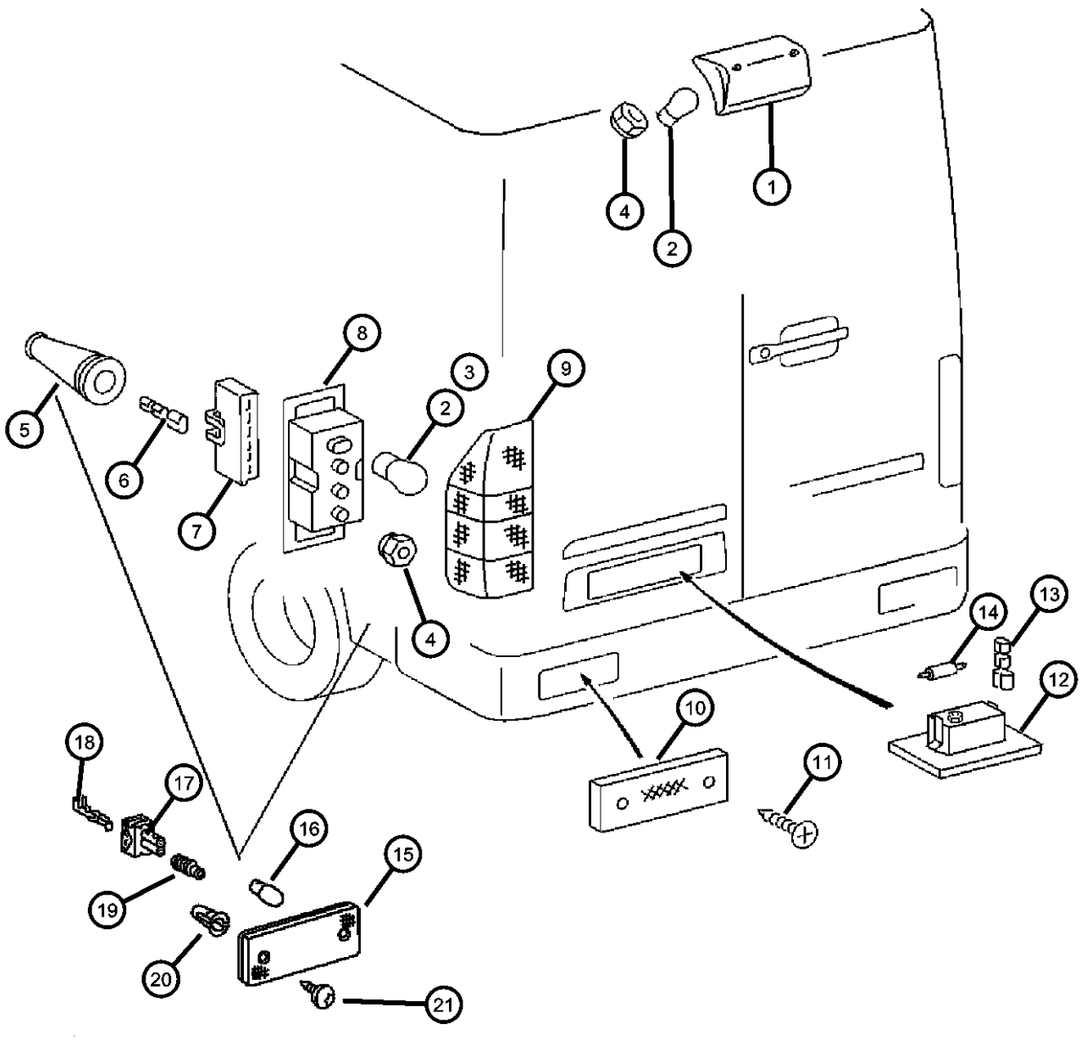

ITEM	PART NUMBER	QTY	LINE	SERIES	BODY	ENGINE	TRANS	TRIM	DESCRIPTION
		8	3, 7	L	12, 15				
		8	3, 7	L	16				
		8	2, 6	L	51, 52, 54, 55				
		8	2, 6	L	56				
-22									LENS
	05124605AA	4	2, 6	L	16				Side
		4	2, 6	L	56				Side
		4	3, 7	L	16				Side
	05133969AA	99	2, 6	L	01, 02, 06				Side
		99	2, 6	L	11, 12, 14, 15, 16				Side

SPRINTER (VA)

SERIES	LINE	BODY	ENGINE	TRANSMISSION
L = LOWLINE	3 = HD DODGE 2WD 6 = Lt. Duty DODGE 4WD 2 = Med. Duty DODGE 2WD 7 = Med. Duty DODGE 4WD	55 = Wagon 140" 54 = Wagon 118" 52 = Wagon 140" 51 = Wagon 118" 12 = Van 140" 11 = Van 118" 06 = Front Section 158" 14 = Van 118" 15 = Van 140" 16 = Van 158" 56 = Wagon 158" 01 = Chassis Forward Control 118" 02 = Chassis Forward Control 140"	EX8 = Engine-2.7L I5 Mercedes Turbo Diesel	DGJ = Transmission-5-Spd. Automatic,W5A580

Lamps Rear End Cab and Chassis Vehicles
Figure 8-1115

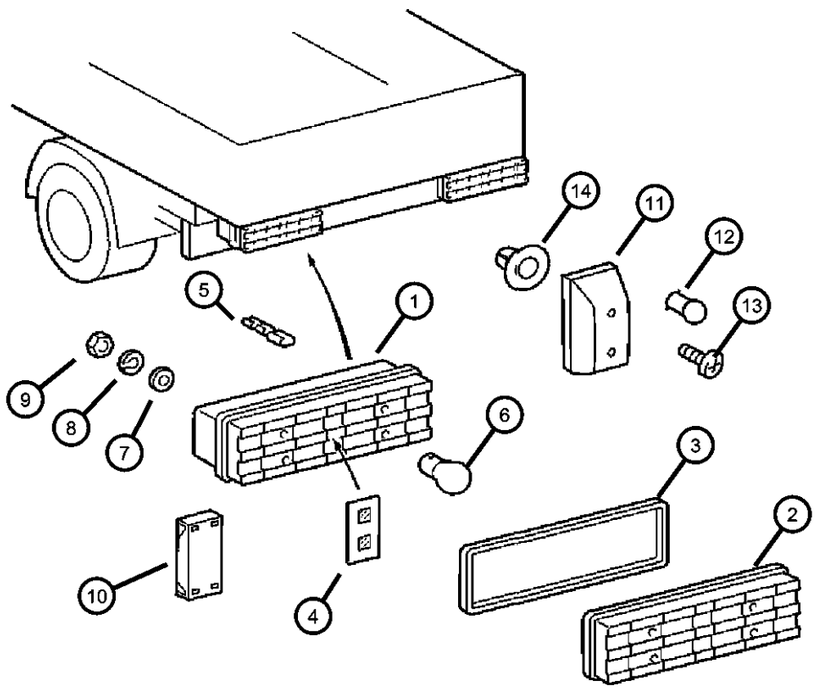

ITEM	PART NUMBER	QTY	LINE	SERIES	BODY	ENGINE	TRANS	TRIM	DESCRIPTION
1									LAMP, Tail Stop Turn
	05124543AA	1	2, 6	L	01, 02, 06				Left
		1	3, 7	L	02, 06				Left
	05124545AA	1	2, 6	L	01, 02, 06				Right
		1	3, 7	L	02, 06				Right
2		1							LENS, Serviced in lamp assembly, (NOT SERVICED)
3		1							GASKET, Tail Lamp, Serviced in lamp assembly, (NOT SERVICED)
4									REFLECTOR, Tail Lamp
	05136451AA	2	3, 7	L	02, 06				
		2	2, 6	L	01, 02, 06				
5									TERMINAL, Female
	05114451AA	99	2, 6	L	01, 02, 06				
		99	3, 7	L	02, 06				
6									BULB
	05104646AA	1	2, 6	L	01, 02, 06				
		7	3, 7	L	02, 06				
7		7							WASHER, (NOT SERVICED)
8									WASHER, Lock
	05126241AA	4	3, 7	L	02, 06				
		4	2, 6	L	01, 02, 06				
9									NUT
	05126206AA	4	2, 6	L	01, 02, 06				
		6	3, 7	L	02, 06				
10									CAP
	05120951AA	2	2, 6	L	01, 02, 06				
		2	3, 7	L	02, 06				
11		2							LAMP, License Plate, (NOT SERVICED)

SPRINTER (VA)

SERIES	LINE	BODY	ENGINE	TRANSMISSION
L = LOWLINE	3 = HD DODGE 2WD 6 = Lt. Duty DODGE 4WD 2 = Med. Duty DODGE 2WD 7 = Med. Duty DODGE 4WD	55 = Wagon 140" 54 = Wagon 118" 52 = Wagon 140" 51 = Wagon 118" 12 = Van 140" 11 = Van 118" 06 = Front Section 158" 14 = Van 118" 15 = Van 140" 16 = Van 158" 56 = Wagon 158" 01 = Chassis Forward Control 118" 02 = Chassis Forward Control 140"	EX8 = Engine-2.7L I5 Mercedes Turbo Diesel	DGJ = Transmission-5-Spd. Automatic,W5A580

Lamps Rear End Cab and Chassis Vehicles
Figure 8-1115

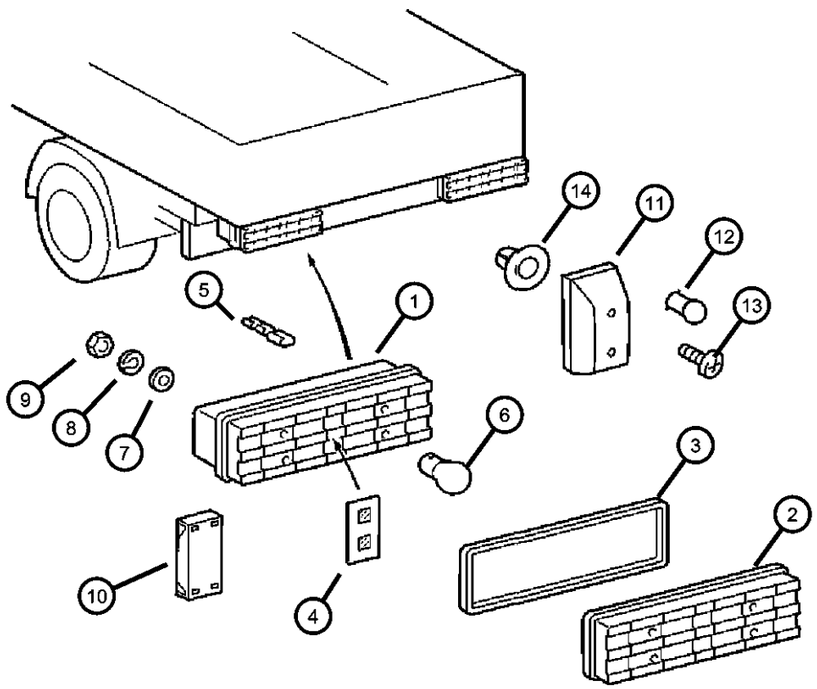

ITEM	PART NUMBER	QTY	LINE	SERIES	BODY	ENGINE	TRANS	TRIM	DESCRIPTION
12		2							BULB, 12V 10W, (NOT SERVICED)
13		2							SCREW, (NOT SERVICED)
14									NUT, Push In
	05103841AA	4	2, 6	L	01, 02, 06				
		4	3, 7	L	02, 06				

SPRINTER (VA)

SERIES	LINE	BODY	ENGINE	TRANSMISSION
L = LOWLINE	3 = HD DODGE 2WD 6 = Lt. Duty DODGE 4WD 2 = Med. Duty DODGE 2WD 7 = Med. Duty DODGE 4WD	55 = Wagon 140" 54 = Wagon 118" 52 = Wagon 140" 51 = Wagon 118" 12 = Van 140" 11 = Van 118" 06 = Front Section 158" 14 = Van 118" 15 = Van 140" 16 = Van 158" 56 = Wagon 158" 01 = Chassis Forward Control 118" 02 = Chassis Forward Control 140"	EX8 = Engine-2.7L I5 Mercedes Turbo Diesel	DGJ = Transmission-5-Spd. Automatic,W5A580

Lamps Interior Passenger Van
Figure 8-1120

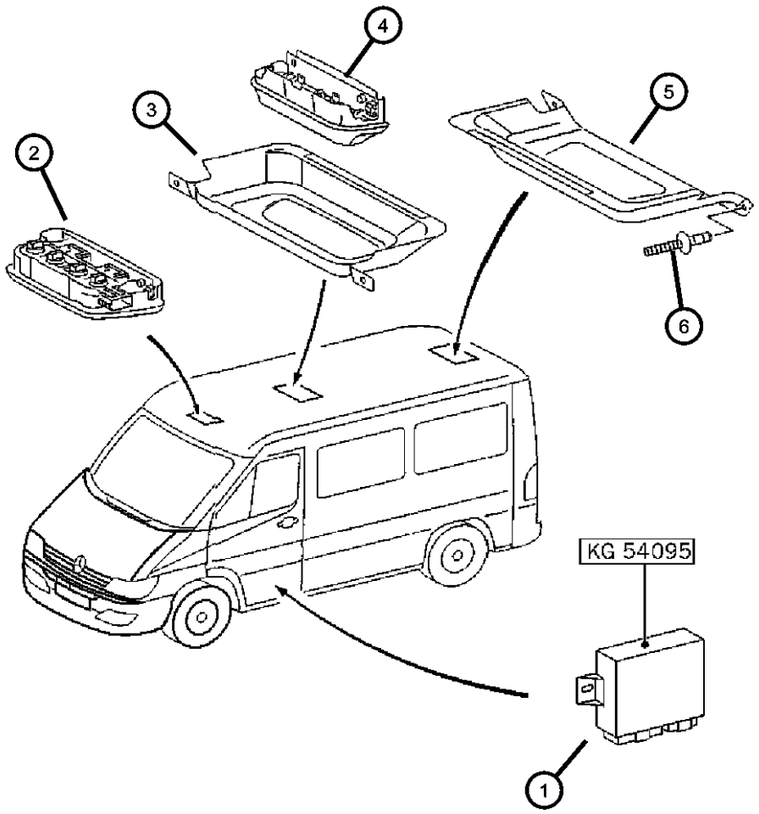

ITEM	PART NUMBER	QTY	LINE	SERIES	BODY	ENGINE	TRANS	TRIM	DESCRIPTION
1									CONTROL UNIT, NONE, SPRINTER
	05103899AA	1	2, 6	L	11, 12, 14, 15, 16				
		1	2, 6	L	51, 52, 54, 55, 56				
		1	3, 7	L	12, 15, 16				
2									LAMP, Reading
	05124399AA	1	2, 6	L	11, 12, 14, 15, 16				
		1	2, 6	L	51, 52, 54, 55, 56				
		1	3, 7	L	12, 15, 16				
3									BRACKET
	05124591AA	1	2, 6	L	11, 12, 14, 15, 16				
		1	2, 6	L	51, 52, 54, 55, 56				
		1	3, 7	L	12, 15, 16				
4									SWITCH
	0ZF50RC3AA	2	2, 6	L	11, 12, 14, 15, 16				Dome Lamp
		2	2, 6	L	51, 52, 54, 55, 56				Dome Lamp
		2	3, 7	L	12, 15, 16				Dome Lamp
5									BRACKET
	05124594AA	1	2, 6	L	11, 12, 14, 15, 16				
		1	2, 6	L	51, 52, 54, 55, 56				
		1	3, 7	L	12, 15, 16				
6									RIVET, M4.8
	05133934AA	4	2, 6	L	11, 12, 14, 15, 16				

SPRINTER (VA)

SERIES	LINE	BODY	ENGINE	TRANSMISSION
L = LOWLINE	3 = HD DODGE 2WD 6 = Lt. Duty DODGE 4WD 2 = Med. Duty DODGE 2WD 7 = Med. Duty DODGE 4WD	55 = Wagon 140" 54 = Wagon 118" 52 = Wagon 140" 51 = Wagon 118" 12 = Van 140" 11 = Van 118" 06 = Front Section 158" 14 = Van 118" 15 = Van 140" 16 = Van 158" 56 = Wagon 158" 01 = Chassis Forward Control 118" 02 = Chassis Forward Control 140"	EX8 = Engine-2.7L I5 Mercedes Turbo Diesel	DGJ = Transmission-5-Spd. Automatic,W5A580

Lamps Interior Passenger Van
Figure 8-1120

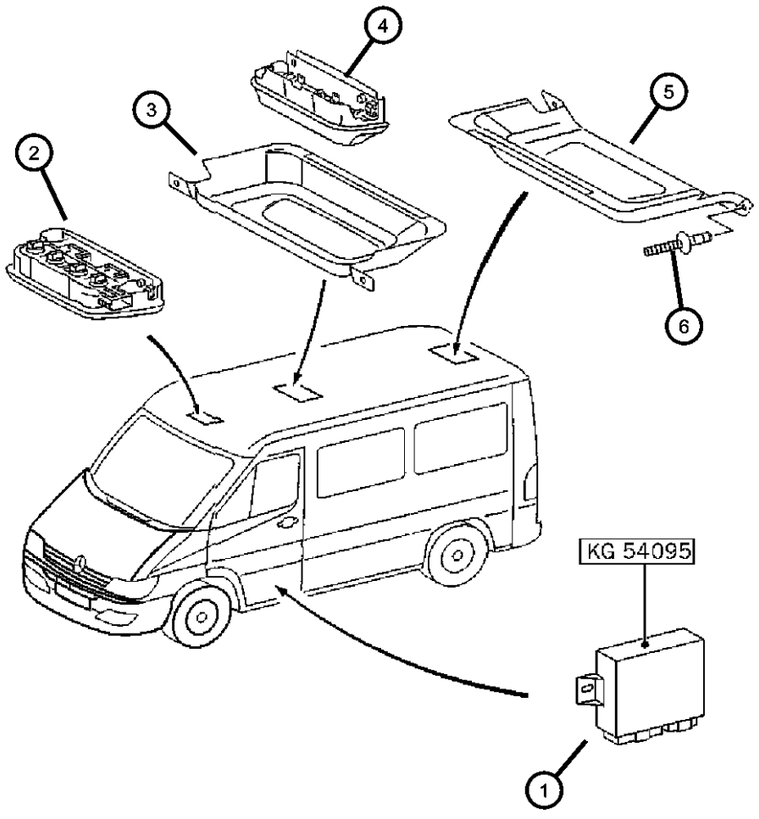

ITEM	PART NUMBER	QTY	LINE	SERIES	BODY	ENGINE	TRANS	TRIM	DESCRIPTION
		4	2, 6	L	51, 52, 54, 55, 56				
		4	3, 7	L	12, 15, 16				

SPRINTER (VA)

SERIES	LINE	BODY	ENGINE	TRANSMISSION
L = LOWLINE	3 = HD DODGE 2WD 6 = Lt. Duty DODGE 4WD 2 = Med. Duty DODGE 2WD 7 = Med. Duty DODGE 4WD	55 = Wagon 140" 54 = Wagon 118" 52 = Wagon 140" 51 = Wagon 118" 12 = Van 140" 11 = Van 118" 06 = Front Section 158" 14 = Van 118" 15 = Van 140" 16 = Van 158" 56 = Wagon 158" 01 = Chassis Forward Control 118" 02 = Chassis Forward Control 140"	EX8 = Engine-2.7L I5 Mercedes Turbo Diesel	DGJ = Transmission-5-Spd. Automatic,W5A580

Lamps Interior Cargo Van
Figure 8-1125

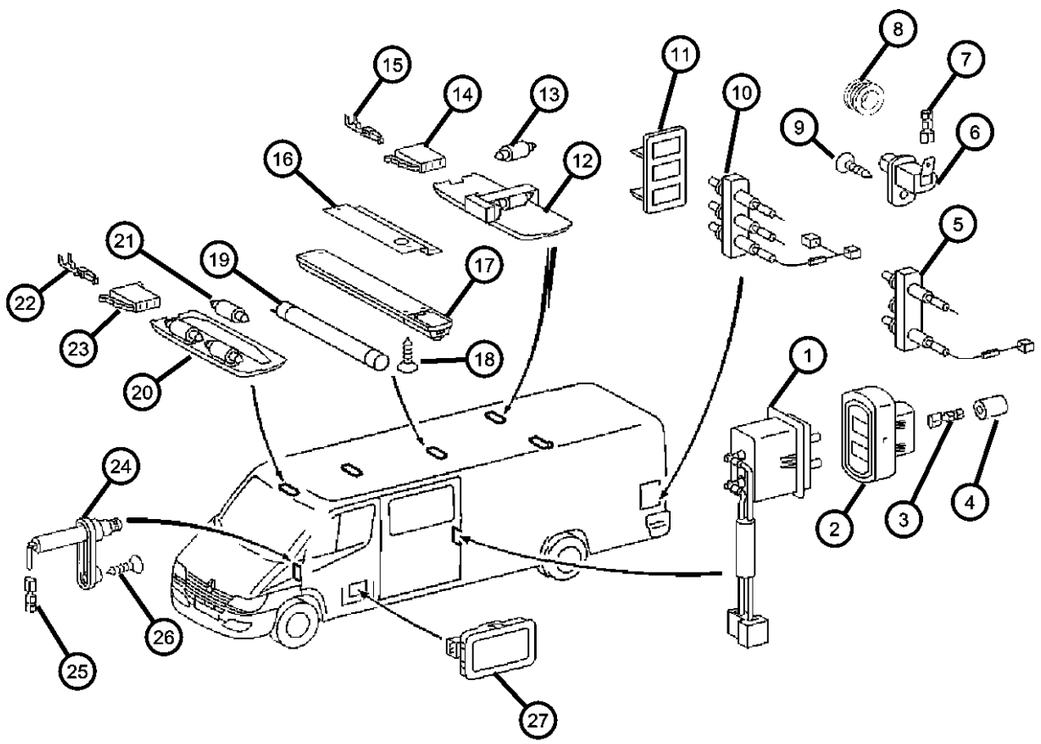

ITEM	PART NUMBER	QTY	LINE	SERIES	BODY	ENGINE	TRANS	TRIM	DESCRIPTION
1									CONTACT, Power Door Lock
	05104463AA	2	2, 6	L	51, 52, 54, 55, 56				
		2	3, 7	L	12, 15, 16				
		2	2, 6	L	11, 12, 14, 15, 16				
2									CONTACT, Power Door Lock
	05104461AA	4	2, 6	L	11, 12, 14, 15, 16				
		2	2, 6	L	51, 52, 54, 55, 56				
		2	3, 7	L	12, 15, 16				
3									TERMINAL, Female
	05114451AA	99	2, 6	L	11, 12, 14, 15, 16				
		99	2, 6	L	51, 52, 54, 55, 56				
		99	3, 7	L	12, 15, 16				
4									GROMMET
	05133968AA	99	2, 6	L	11, 12, 14, 15, 16				
		99	2, 6	L	56, 51, 52, 54, 55				
		99	3, 7	L	12, 15, 16				
5									CONTACT, Power Door Lock
	05104016AA	1	2, 6	L	11, 12, 14, 15, 16				
		1	3, 7	L	12, 15, 16				
		1	2, 6	L	51, 52, 54, 55, 56				
6									CONTACTOR, REAR PANEL DOOR, SPRINTER
	05103678AA	1	2, 6	L	11, 12, 14, 15, 16				
		1	2, 6	L	51, 52, 54, 55, 56				

SPRINTER (VA)

SERIES	LINE	BODY	ENGINE	TRANSMISSION
L = LOWLINE	3 = HD DODGE 2WD 6 = Lt. Duty DODGE 4WD 2 = Med. Duty DODGE 2WD 7 = Med. Duty DODGE 4WD	55 = Wagon 140" 54 = Wagon 118" 52 = Wagon 140" 51 = Wagon 118" 12 = Van 140" 11 = Van 118" 06 = Front Section 158" 14 = Van 118" 15 = Van 140" 16 = Van 158" 56 = Wagon 158" 01 = Chassis Forward Control 118" 02 = Chassis Forward Control 140"	EX8 = Engine-2.7L I5 Mercedes Turbo Diesel	DGJ = Transmission-5-Spd. Automatic,W5A580

Lamps Interior Cargo Van
Figure 8-1125

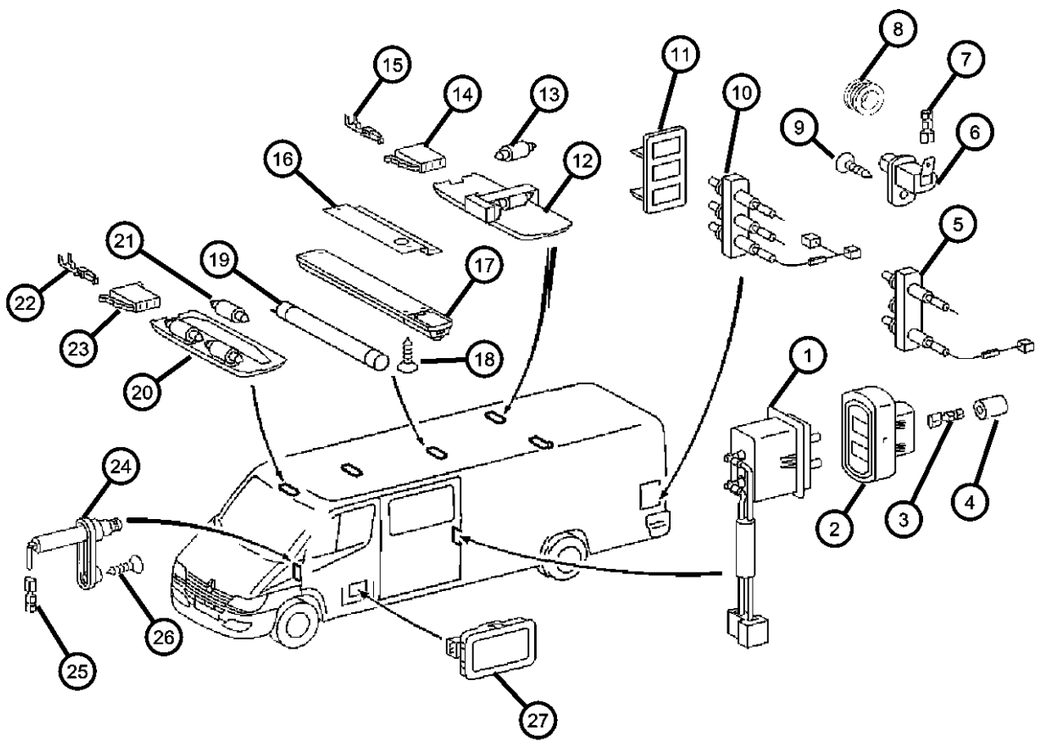

ITEM	PART NUMBER	QTY	LINE	SERIES	BODY	ENGINE	TRANS	TRIM	DESCRIPTION
		1	3, 7	L	12, 15, 16				
7									TERMINAL, Female
	05133359AA	99	2, 6	L	11, 12, 14, 15, 16				
		99	2, 6	L	51, 52, 54, 55, 56				
		99	3, 7	L	12, 15, 16				
8									GROMMET
	05125931AA	1	2, 6	L	11, 12, 14, 15, 16				
		1	2, 6	L	51, 52, 54, 55, 56				
		2	3, 7	L	12, 15, 16				
9									SCREW
	05126106AA	1	2, 6	L	11, 12, 14, 15, 16				
		1	2, 6	L	51, 52, 54, 55, 56				
		1	3, 7	L	12, 15, 16				
10									CONTACTOR, HEATED REAR WINDOW PANE, SPRINTER
	05104015AA	3	2, 6	L	11, 12, 14, 15, 16				
		3	2, 6	L	52, 54, 55, 56, 51				
		3	3, 7	L	12, 15, 16				
11									CONTACT, Power Door Lock
	05124466AA	1	2, 6	L	11, 12, 14, 15, 16				3 contact
		1	2, 6	L	51, 52, 54, 55, 56				3 contact
	05104465AA	1	2, 6	L	11, 12, 14, 15, 16				2 contact
		1	6, 2	L	51, 52, 54, 55, 56				2 contact

SPRINTER (VA)

SERIES	LINE	BODY	ENGINE	TRANSMISSION
L = LOWLINE	3 = HD DODGE 2WD 6 = Lt. Duty DODGE 4WD 2 = Med. Duty DODGE 2WD 7 = Med. Duty DODGE 4WD	55 = Wagon 140" 54 = Wagon 118" 52 = Wagon 140" 51 = Wagon 118" 12 = Van 140" 11 = Van 118" 06 = Front Section 158" 14 = Van 118" 15 = Van 140" 16 = Van 158" 56 = Wagon 158" 01 = Chassis Forward Control 118" 02 = Chassis Forward Control 140"	EX8 = Engine-2.7L I5 Mercedes Turbo Diesel	DGJ = Transmission-5-Spd. Automatic,W5A580

Lamps Interior Cargo Van
Figure 8-1125

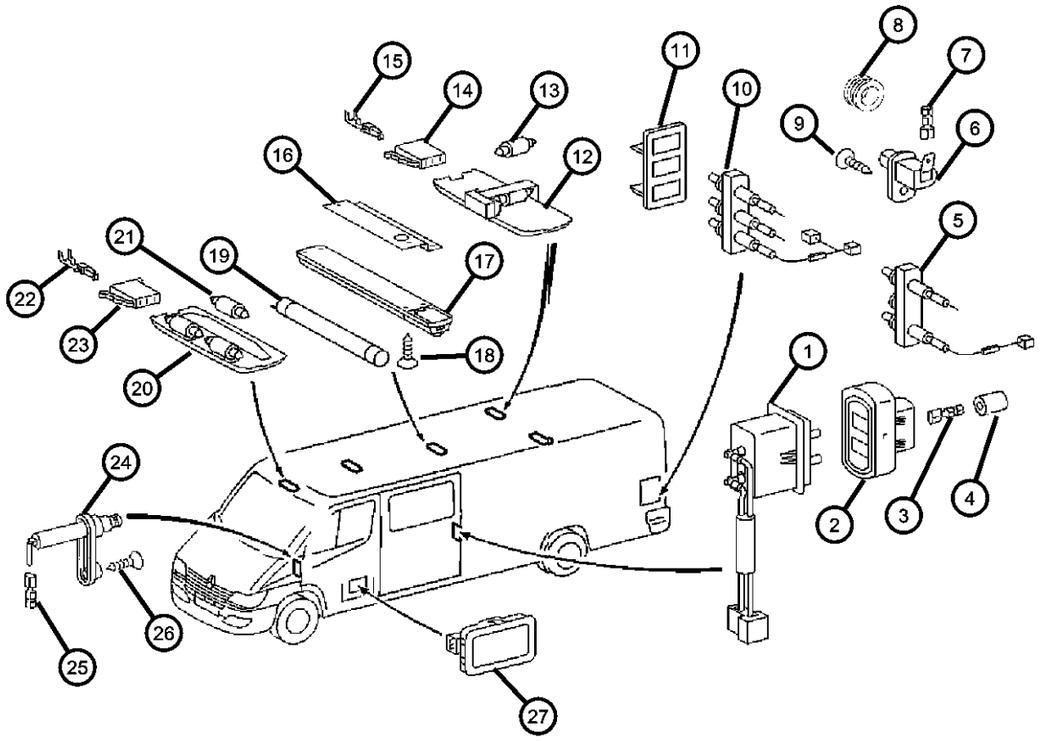

ITEM	PART NUMBER	QTY	LINE	SERIES	BODY	ENGINE	TRANS	TRIM	DESCRIPTION
		1	3, 7	L	12, 15, 16				2 contact
		1	3, 7	L	12, 15, 16				3 contact
12									LAMP, Cargo
	05104459AA	3	3, 7	L	12, 15, 16				
		1	2, 6	L	11, 12, 14, 15, 16				
		1	2, 6	L	51, 52, 54, 55, 56				
13									BULB
	05104645AA	1	2, 6	L	51, 52, 54, 55, 56				
		1	2, 6	L	11, 12, 14, 15, 16				
		3	3, 7	L	12, 15, 16				
14									CONNECTOR
	05120545AA	1	2, 6	L	11, 12, 14, 15, 16				
		1	2, 6	L	51, 52, 54, 55, 56				
		1	3, 7	L	12, 15, 16				
15									TERMINAL
	05103881AA	1	2, 6	L	11, 12, 14, 15, 16				
		1	2, 6	L	51, 52, 54, 55, 56				
		1	3, 7	L	12, 15, 16				
16	05121426AA	1	3, 7	L	12, 15, 16				BRACKET
17									INTERIOR LAMP, NONE, SPRINTER
	05103764AA	1	2, 6	L	11, 12, 14, 15, 16				
		1	3, 7	L	12, 15, 16				
18									SCREW

SPRINTER (VA)

SERIES	LINE	BODY	ENGINE	TRANSMISSION
L = LOWLINE	3 = HD DODGE 2WD 6 = Lt. Duty DODGE 4WD 2 = Med. Duty DODGE 2WD 7 = Med. Duty DODGE 4WD	55 = Wagon 140" 54 = Wagon 118" 52 = Wagon 140" 51 = Wagon 118" 12 = Van 140" 11 = Van 118" 06 = Front Section 158" 14 = Van 118" 15 = Van 140" 16 = Van 158" 56 = Wagon 158" 01 = Chassis Forward Control 118" 02 = Chassis Forward Control 140"	EX8 = Engine-2.7L I5 Mercedes Turbo Diesel	DGJ = Transmission-5-Spd. Automatic,W5A580

Lamps Interior Cargo Van
Figure 8-1125

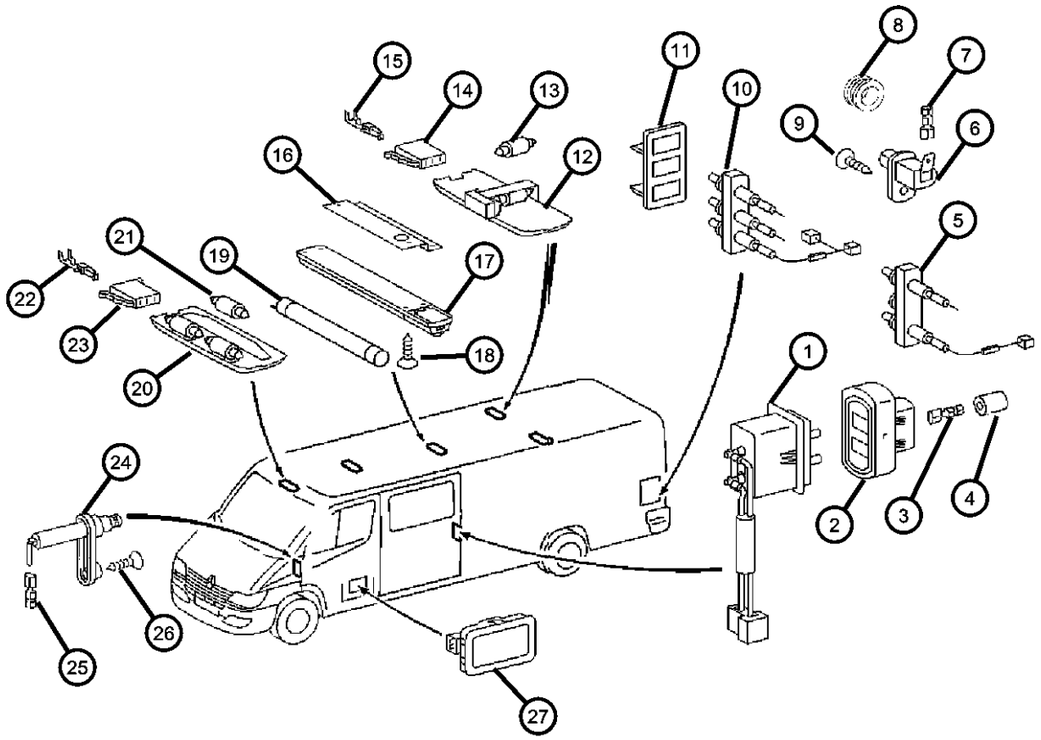

ITEM	PART NUMBER	QTY	LINE	SERIES	BODY	ENGINE	TRANS	TRIM	DESCRIPTION
	06104527AA	4	2, 6	L	11, 12, 14, 15, 16				
		9	3, 7	L	12, 15, 16				
19									LAMP, Glove Box
	05133563AA	1	2, 6	L	11, 12, 14, 15, 16				
		99	3, 7	L	12, 15, 16				
20									LAMP, Dome
	05133561AA	1	2, 6	L	01, 02, 06				[LBG]
		1	2, 6	L	11, 12, 14, 15, 16				[LBG]
		1	2, 6	L	51, 52, 54, 55, 56				[LBG]
		1	3, 7	L	02, 06				[LBG]
		1	3, 7	L	12, 15, 16				[LBG]
21									BULB, 12V 10W
	05096967AA	2	2, 6	L	01, 02, 06				
		2	2, 6	L	11, 12, 14, 15, 16				
		2	2, 6	L	51, 52, 54, 55, 56				
		2	3, 7	L	02, 06				
		2	3, 7	L	12, 15, 16				
22									TERMINAL
	05103882AA	1	2, 6	L	51, 52, 54, 55, 56				
		1	3, 7	L	12, 15, 16				
		1	2, 6	L	11, 12, 14, 15, 16				
23									CONNECTOR
	05120545AA	1	2, 6	L	11, 12, 14, 15, 16				

SPRINTER (VA)

SERIES	LINE	BODY	ENGINE	TRANSMISSION
L = LOWLINE	3 = HD DODGE 2WD 6 = Lt. Duty DODGE 4WD 2 = Med. Duty DODGE 2WD 7 = Med. Duty DODGE 4WD	55 = Wagon 140" 54 = Wagon 118" 52 = Wagon 140" 51 = Wagon 118" 12 = Van 140" 11 = Van 118" 06 = Front Section 158" 14 = Van 118" 15 = Van 140" 16 = Van 158" 56 = Wagon 158" 01 = Chassis Forward Control 118" 02 = Chassis Forward Control 140"	EX8 = Engine-2.7L I5 Mercedes Turbo Diesel	DGJ = Transmission-5-Spd. Automatic,W5A580

Lamps Interior Cargo Van
Figure 8-1125

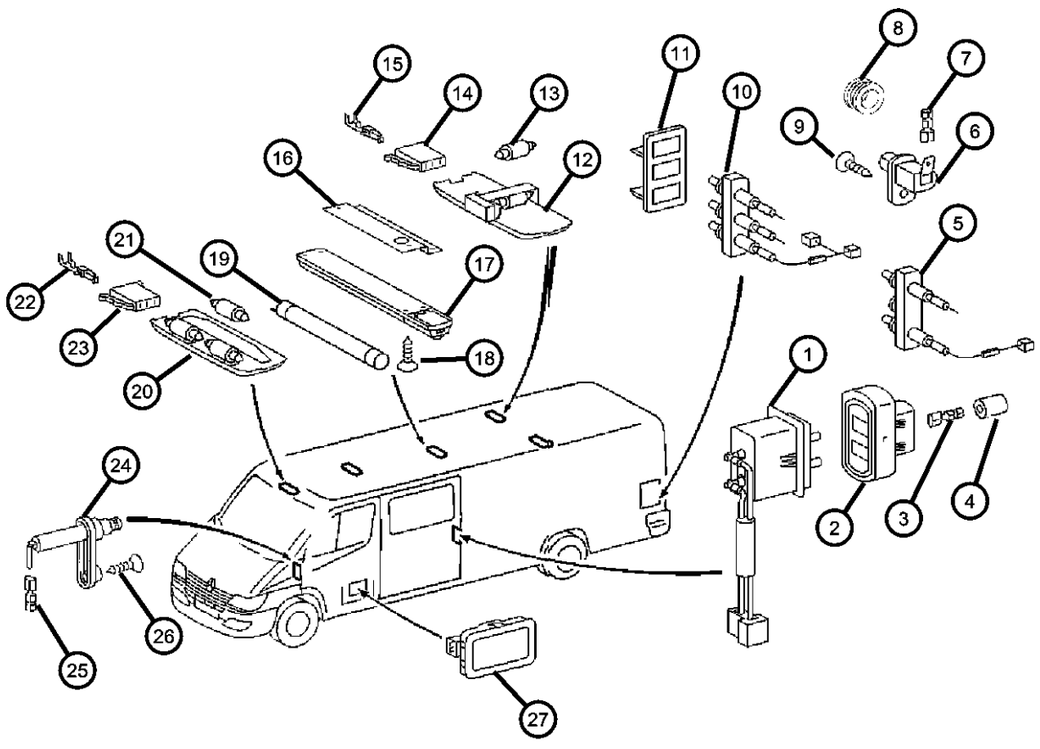

ITEM	PART NUMBER	QTY	LINE	SERIES	BODY	ENGINE	TRANS	TRIM	DESCRIPTION
		1	2, 6	L	51, 52, 54, 55, 56				
		1	3, 7	L	12, 15, 16				
24									SWITCH, Door Ajar
	05103861AA	2	2, 6	L	01, 02, 06				
		1	2, 6	L	11, 12, 14, 15, 16				
		1	2, 6	L	51, 52, 54, 55, 56				
		1	3, 7	L	12, 15, 16				
25									TERMINAL, Female
	05133359AA	99	2, 6	L	11, 12, 14, 15, 16				
		99	2, 6	L	51, 52, 54, 55, 56				
		99	3, 7	L	12, 15, 16				
26									SCREW
	05126106AA	2	2, 6	L	11, 12, 14, 15, 16				
		2	2, 6	L	51, 52, 54, 55, 56				
		1	3, 7	L	12, 15, 16				
27									LAMP, Courtesy
	05103765AA	1	2, 6	L	11, 12, 14, 15, 16				
		1	2, 6	L	51, 52, 54, 55, 56				
		1	3, 7	L	12, 15, 16				

SPRINTER (VA)

SERIES	LINE	BODY	ENGINE	TRANSMISSION
L = LOWLINE	3 = HD DODGE 2WD 6 = Lt. Duty DODGE 4WD 2 = Med. Duty DODGE 2WD 7 = Med. Duty DODGE 4WD	55 = Wagon 140" 54 = Wagon 118" 52 = Wagon 140" 51 = Wagon 118" 12 = Van 140" 11 = Van 118" 06 = Front Section 158" 14 = Van 118" 15 = Van 140" 16 = Van 158" 56 = Wagon 158" 01 = Chassis Forward Control 118" 02 = Chassis Forward Control 140"	EX8 = Engine-2.7L I5 Mercedes Turbo Diesel	DGJ = Transmission-5-Spd. Automatic,W5A580

Lamp - Bulbs
Figure 8-1130

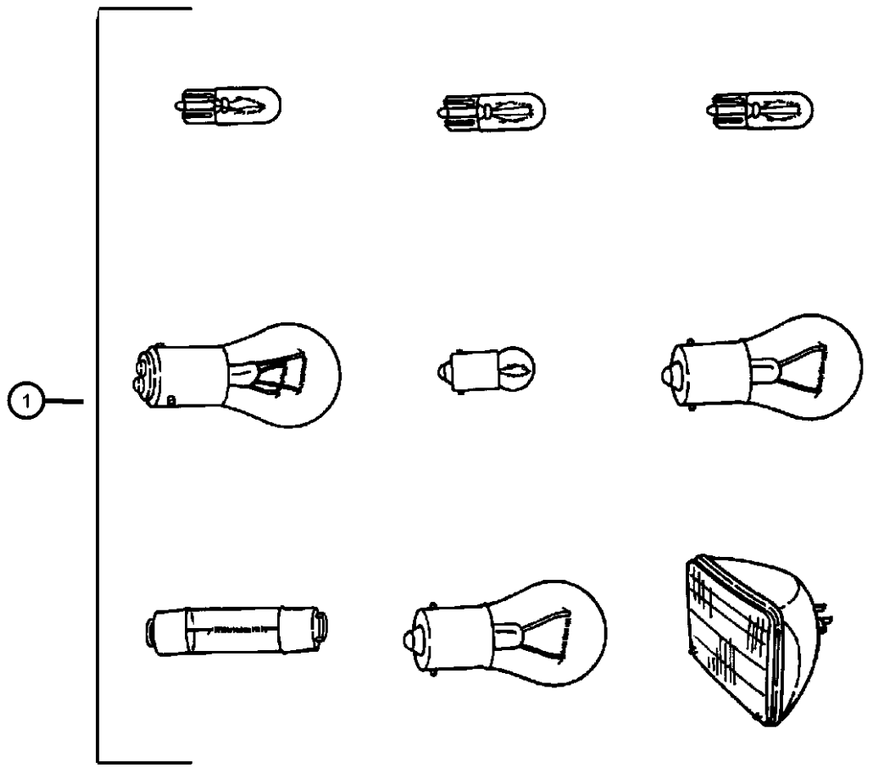

ITEM	PART NUMBER	QTY	LINE	SERIES	BODY	ENGINE	TRANS	TRIM	DESCRIPTION
1									BULB
	05126194AA	2	2, 6	L	01, 02, 06				
		2	2, 6	L	11, 12, 14, 15, 16				
		2	2, 6	L	51, 52, 54, 55, 56				
		2	3, 7	L	12, 15, 16				
-2									BULB
	05104646AA	4	2, 6	L	11, 12, 14, 15, 16				
		4	2, 6	L	51, 52, 54, 55, 56				
		4	3, 7	L	12, 15, 16				
-3									BULB, Headlamp, H-7
	05104684AA	2	2, 6	L	51, 52, 54, 55, 56				
		2	3, 7	L	12, 15, 16				
		2	2, 6	L	11, 12, 14, 15, 16				
-4									BULB, Fog Lamp, 12V 55W
	05104682AA	99	2, 6	L	11, 12, 14, 15, 16				
		99	2, 6	L	56, 51, 52, 54, 55				
		99	3, 7	L	12, 15, 16				
-5									BULB, 12V 5W
	05104648AA	2	2, 6	L	11, 12, 14, 15, 16				
		2	2, 6	L	55, 56, 51, 52, 54				
		2	3, 7	L	12, 15, 16				
		2	2, 6	L	01, 02, 06				
-6									BULB
	05104649AA	6	2, 6	L	01, 02, 06				

SPRINTER (VA)

SERIES	LINE	BODY	ENGINE	TRANSMISSION
L = LOWLINE	3 = HD DODGE 2WD 6 = Lt. Duty DODGE 4WD 2 = Med. Duty DODGE 2WD 7 = Med. Duty DODGE 4WD	55 = Wagon 140" 54 = Wagon 118" 52 = Wagon 140" 51 = Wagon 118" 12 = Van 140" 11 = Van 118" 06 = Front Section 158" 14 = Van 118" 15 = Van 140" 16 = Van 158" 56 = Wagon 158" 01 = Chassis Forward Control 118" 02 = Chassis Forward Control 140"	EX8 = Engine-2.7L I5 Mercedes Turbo Diesel	DGJ = Transmission-5-Spd. Automatic,W5A580

Lamp - Bulbs
Figure 8-1130

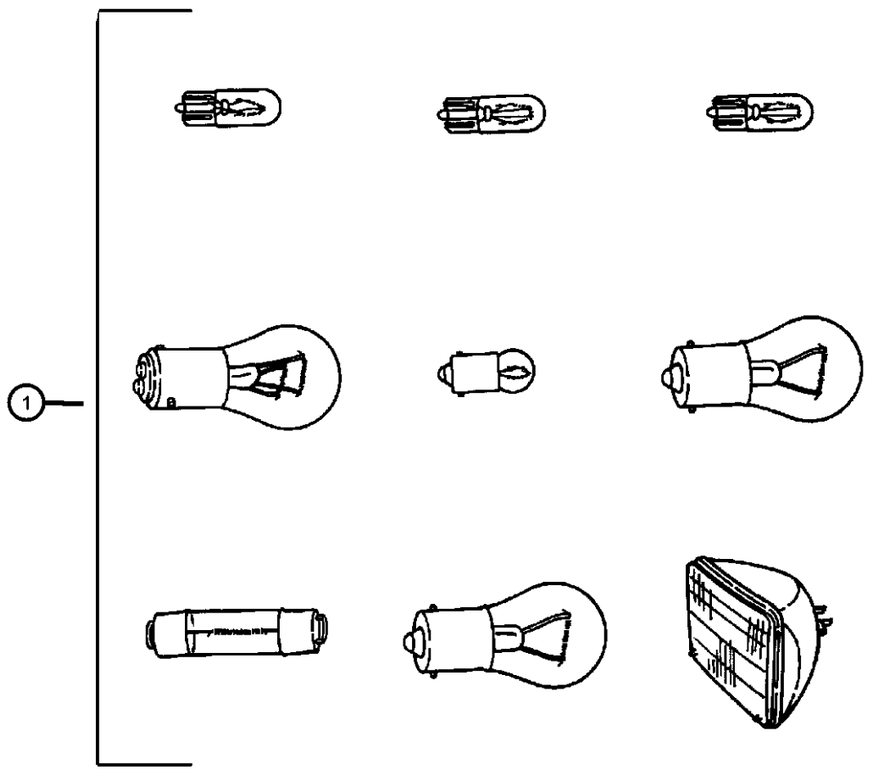

ITEM	PART NUMBER	QTY	LINE	SERIES	BODY	ENGINE	TRANS	TRIM	DESCRIPTION
		2	2, 6	L	11, 12, 14, 15, 16				
		2	2, 6	L	51, 52, 54, 55, 56				
		2	3, 7	L	12, 15, 16				
-7									BULB, 12V 5W
	05096968AA	2	2, 6	L	11, 12, 14, 15, 16				License Plate Lamp
		2	2, 6	L	51, 52, 54, 55, 56				License Plate Lamp
		2	3, 7	L	12, 15, 16				License Plate Lamp
-8									BULB
	05104645AA	3	2, 6	L	12, 15, 16				
		3	2, 6	L	52, 55, 56				
		2	2, 6	L	11, 12, 14, 15, 16				
		1	2, 6	L	51, 52, 54, 55, 56				
-9	05175563AB	1		L					BULB KIT, CONTENTS 1 PC EACH 64210 LONGLIFE H7 L0000000H7 64150 LONGLIFE H1 05104682AA 7507 PY21W 05104662AA 2825 W5W 05104608AA
-10									BULB, TAIL LAMP
	05104647AA	2	2, 6	L	15, 16, 11, 12, 14				
		2	2, 6	L	51, 52, 54, 55, 56				
		2	3, 7	L	12, 15, 16				

SPRINTER (VA)

SERIES	LINE	BODY	ENGINE	TRANSMISSION
L = LOWLINE	3 = HD DODGE 2WD 6 = Lt. Duty DODGE 4WD 2 = Med. Duty DODGE 2WD 7 = Med. Duty DODGE 4WD	55 = Wagon 140" 54 = Wagon 118" 52 = Wagon 140" 51 = Wagon 118" 12 = Van 140" 11 = Van 118" 06 = Front Section 158" 14 = Van 118" 15 = Van 140" 16 = Van 158" 56 = Wagon 158" 01 = Chassis Forward Control 118" 02 = Chassis Forward Control 140"	EX8 = Engine-2.7L I5 Mercedes Turbo Diesel	DGJ = Transmission-5-Spd. Automatic,W5A580

Wiring - Engine
Figure 8-1210

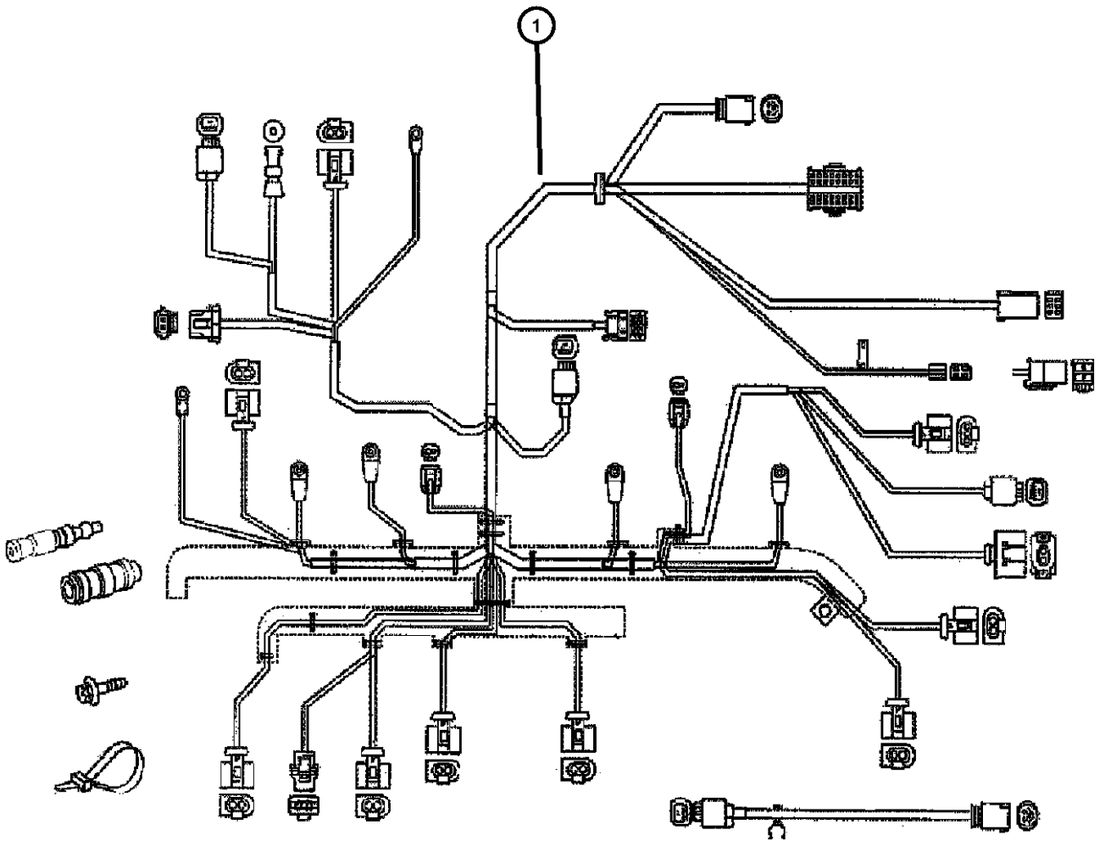

ITEM	PART NUMBER	QTY	LINE	SERIES	BODY	ENGINE	TRANS	TRIM	DESCRIPTION
1									WIRING, Engine
	05120170AA	1	2, 6	L	11, 12, 14, 15, 16	EX8, EX9			
		1	2, 6	L	51, 52, 54, 55, 56	EX8, EX9			
		1	3, 7	L	02, 06	EX8, EX9			
		1	3, 7	L	12, 15, 16	EX8, EX9			
	05135872AA	1		L		EX9			
	05120167AA	1		L		EX8			
		1	2, 6	L	01, 02, 06	EX8, EX9			
-2	05135839AA	1		L					CONNECTOR
-3									TERMINAL
	05103881AA	1	2, 6	L	11, 12, 14, 15, 16				Contact Spring [1.5-2.5 MM]
		1	3, 7	L	12, 15, 16				Contact Spring [1.5-2.5 MM]
		1	2, 6	L	51, 52, 54, 55, 56				Contact Spring [1.5-2.5 MM]
-4									CONNECTOR, Wiring
	05133396AA	1	2, 6	L	11, 12, 14, 15, 16				Engine Harness To Chasis Harness
		1	2, 6	L	51, 52, 54, 55, 56				Engine Harness To Chasis Harness
		1	3, 7	L	12, 15, 16				Engine Harness To Chasis Harness
-5									CONNECTOR
	05103753AA	1	2, 6	L	01, 02, 06				
		1	2, 6	L	11, 12, 14, 15, 16				Engine Harness To Chasis Harness
		1	2, 6	L	51, 52, 54, 55, 56				Engine Harness To Chasis Harness
		1	3, 7	L	12, 15, 16				Engine Harness To Chasis Harness
-6									TERMINAL, Female
	05114451AA	2	2, 6	L	11, 12, 14, 15, 16				Engine Harness To Frame Harness [.5-2.5 MM]

SPRINTER (VA)

SERIES	LINE	BODY	ENGINE	TRANSMISSION
L = LOWLINE	3 = HD DODGE 2WD 6 = Lt. Duty DODGE 4WD 2 = Med. Duty DODGE 2WD 7 = Med. Duty DODGE 4WD	55 = Wagon 140" 54 = Wagon 118" 52 = Wagon 140" 51 = Wagon 118" 12 = Van 140" 11 = Van 118" 06 = Front Section 158" 14 = Van 118" 15 = Van 140" 16 = Van 158" 56 = Wagon 158" 01 = Chassis Forward Control 118" 02 = Chassis Forward Control 140"	EX8 = Engine-2.7L I5 Mercedes Turbo Diesel	DGJ = Transmission-5-Spd. Automatic,W5A580

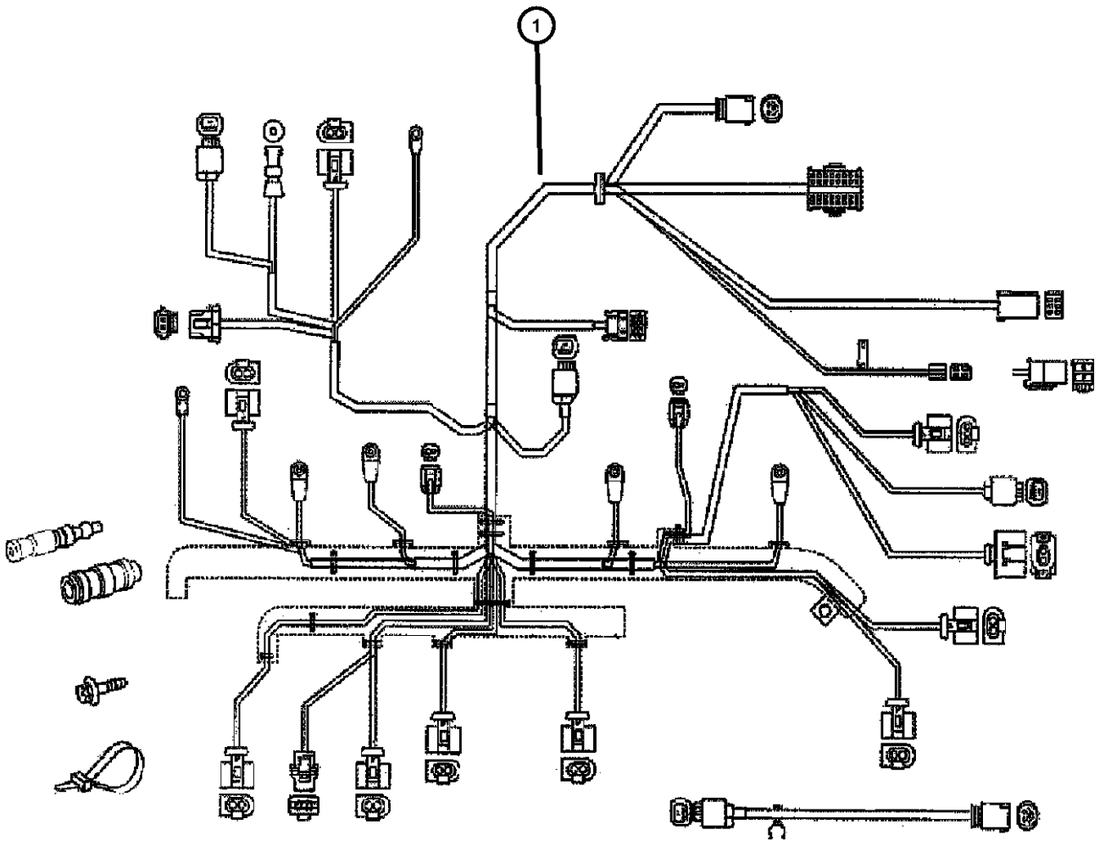

ITEM	PART NUMBER	QTY	LINE	SERIES	BODY	ENGINE	TRANS	TRIM	DESCRIPTION
		2	2, 6	L	51, 52, 54, 55, 56				Engine Harness To Frame Harness [.5-2.5 MM]
		2	3, 7	L	12, 15, 16				Engine Harness To Frame Harness [.5-2.5 MM]
-7	05135838AA	1		L					INSULATOR

SPRINTER (VA)

SERIES	LINE	BODY	ENGINE	TRANSMISSION
L = LOWLINE	3 = HD DODGE 2WD 6 = Lt. Duty DODGE 4WD 2 = Med. Duty DODGE 2WD 7 = Med. Duty DODGE 4WD	55 = Wagon 140" 54 = Wagon 118" 52 = Wagon 140" 51 = Wagon 118" 12 = Van 140" 11 = Van 118" 06 = Front Section 158" 14 = Van 118" 15 = Van 140" 16 = Van 158" 56 = Wagon 158" 01 = Chassis Forward Control 118" 02 = Chassis Forward Control 140"	EX8 = Engine-2.7L I5 Mercedes Turbo Diesel	DGJ = Transmission-5-Spd. Automatic,W5A580

Wiring - Headlamp & Dash
Figure 8-1305

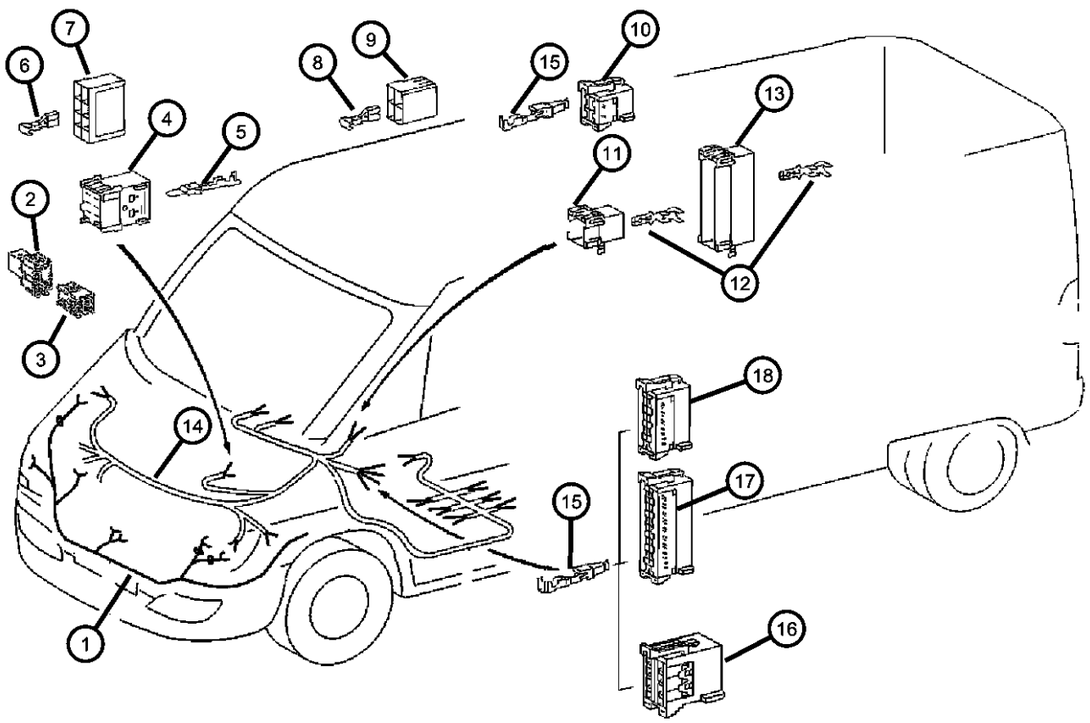

ITEM	PART NUMBER	QTY	LINE	SERIES	BODY	ENGINE	TRANS	TRIM	DESCRIPTION
1									WIRING, Headlamp
	05133398AA	1	2, 6	L	01, 02, 06				
		1	2, 6	L	11, 12, 14, 15, 16				
		1	2, 6	L	51, 52, 54, 55, 56				
		1	3, 7	L	12, 15, 16				
2									INSULATOR, 4 Way Male
	05133397AA	1	2, 6	L	01, 02, 06				
		1	2, 6	L	11, 12, 14, 15, 16				
		1	2, 6	L	51, 52, 54, 55, 56				
		1	3, 7	L	12, 15, 16				
3									CONNECTOR, Wiring
	05133396AA	1	2, 6	L	01, 02, 06				
		1	2, 6	L	11, 12, 14, 15, 16				
		1	2, 6	L	51, 52, 54, 55, 56				
		1	3, 7	L	12, 15, 16				
4									INSULATOR, 6 Way Male
	05133327AA	1	2, 6	L	01, 02, 06				
		1	2, 6	L	11, 12, 14, 15, 16				
		1	2, 6	L	51, 52, 54, 55, 56				
		1	3, 7	L	12, 15, 16				
5									TERMINAL, Male
	05103909AA	1	2, 6	L	01, 02, 06				
		1	2, 6	L	11, 12, 14, 15, 16				
		1	2, 6	L	51, 52, 54, 55, 56				

SPRINTER (VA)

SERIES	LINE	BODY	ENGINE	TRANSMISSION
L = LOWLINE	3 = HD DODGE 2WD 6 = Lt. Duty DODGE 4WD 2 = Med. Duty DODGE 2WD 7 = Med. Duty DODGE 4WD	55 = Wagon 140" 54 = Wagon 118" 52 = Wagon 140" 51 = Wagon 118" 12 = Van 140" 11 = Van 118" 06 = Front Section 158" 14 = Van 118" 15 = Van 140" 16 = Van 158" 56 = Wagon 158" 01 = Chassis Forward Control 118" 02 = Chassis Forward Control 140"	EX8 = Engine-2.7L I5 Mercedes Turbo Diesel	DGJ = Transmission-5-Spd. Automatic,W5A580

Wiring - Headlamp & Dash
Figure 8-1305

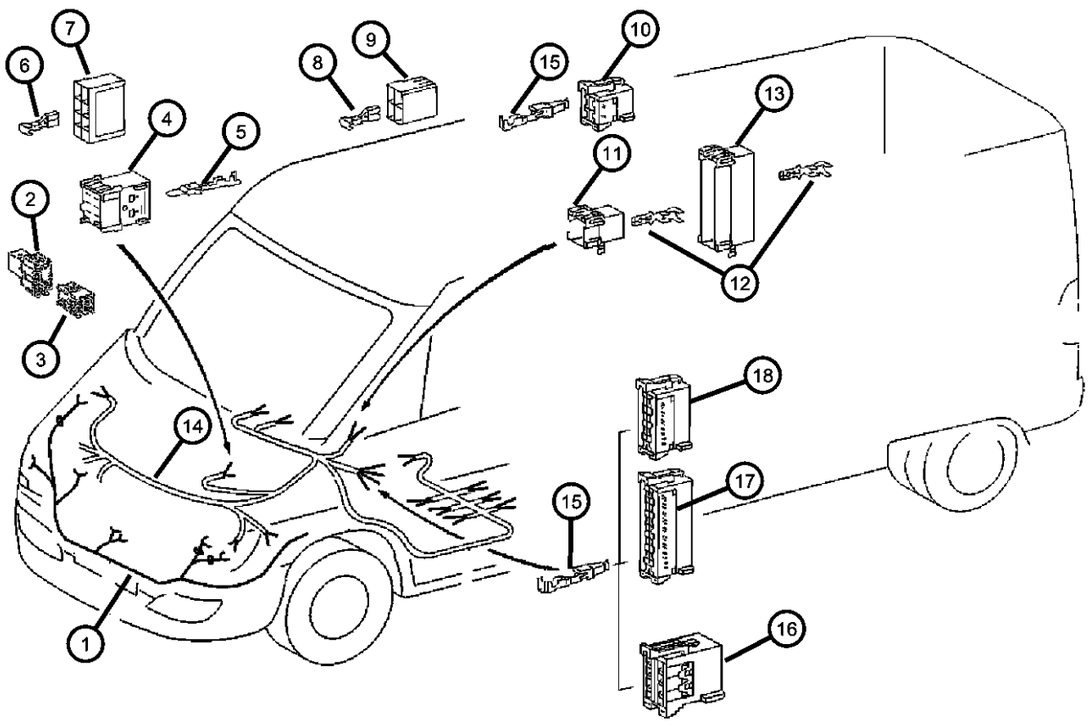

ITEM	PART NUMBER	QTY	LINE	SERIES	BODY	ENGINE	TRANS	TRIM	DESCRIPTION
		1	3, 7	L	12, 15, 16				
6									TERMINAL, Female
	05133359AA	1	2, 6	L	01, 02, 06				
		99	2, 6	L	11, 12, 14, 15, 16				
		99	2, 6	L	51, 52, 54, 55, 56				
		99	3, 7	L	12, 15, 16				
7									CONNECTOR
	05103752AA	1	2, 6	L	01, 02, 06				
		1	2, 6	L	11, 12, 14, 15, 16				
		1	2, 6	L	51, 52, 54, 55, 56				
		1	3, 7	L	12, 15, 16				
8									TERMINAL, Female
	05133360AA	1	2, 6	L	01, 02, 06				
		1	2, 6	L	11, 12, 14, 15, 16				
		1	2, 6	L	51, 52, 54, 55, 56				
		1	3, 7	L	12, 15, 16				
9									CONNECTOR
	05103753AA	1	2, 6	L	11, 12, 14, 15, 16				
		1	2, 6	L	51, 52, 54, 55, 56				
		1	3, 7	L	12, 15, 16				
10									CONNECTOR
	05120785AA	1	2, 6	L	11, 12, 14, 15, 16				
		1	2, 6	L	51, 52, 54, 55, 56				

SPRINTER (VA)

SERIES	LINE	BODY	ENGINE	TRANSMISSION
L = LOWLINE	3 = HD DODGE 2WD 6 = Lt. Duty DODGE 4WD 2 = Med. Duty DODGE 2WD 7 = Med. Duty DODGE 4WD	55 = Wagon 140" 54 = Wagon 118" 52 = Wagon 140" 51 = Wagon 118" 12 = Van 140" 11 = Van 118" 06 = Front Section 158" 14 = Van 118" 15 = Van 140" 16 = Van 158" 56 = Wagon 158" 01 = Chassis Forward Control 118" 02 = Chassis Forward Control 140"	EX8 = Engine-2.7L I5 Mercedes Turbo Diesel	DGJ = Transmission-5-Spd. Automatic,W5A580

Wiring - Headlamp & Dash
Figure 8-1305

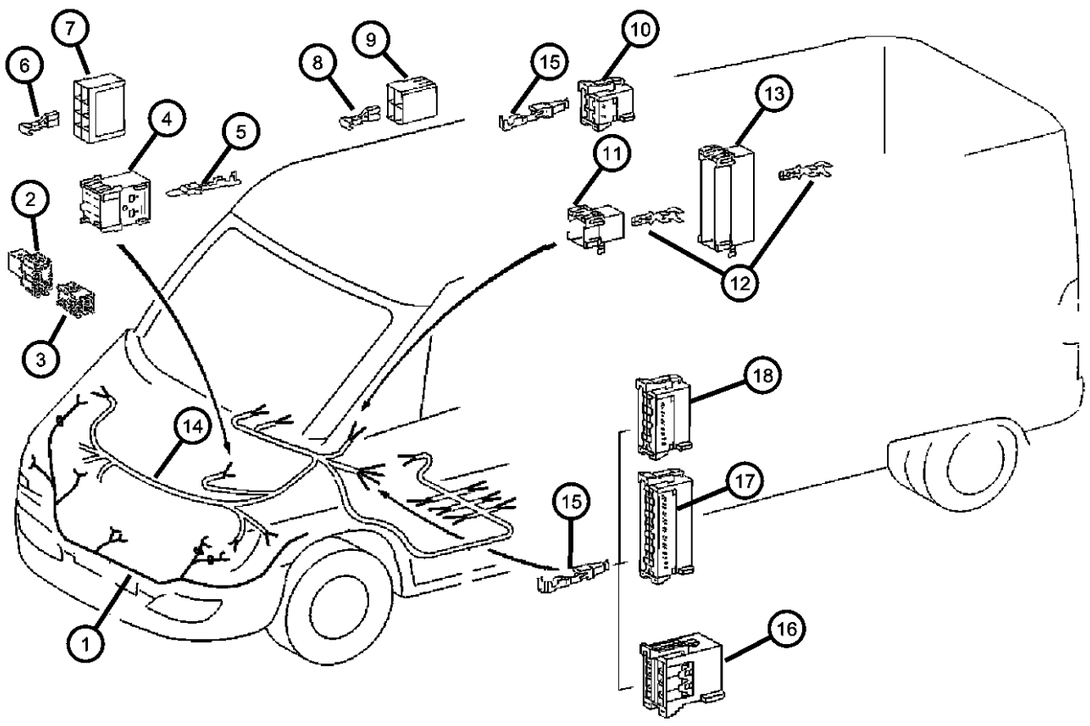

ITEM	PART NUMBER	QTY	LINE	SERIES	BODY	ENGINE	TRANS	TRIM	DESCRIPTION
		1	3, 7	L	12, 15, 16				
11									CONNECTOR
	05120791AA	1	2, 6	L	11, 12, 14, 15, 16				
		1	2, 6	L	51, 52, 54, 55, 56				
		1	3, 7	L	12, 15, 16				
12									TERMINAL, Male
	05133377AA	1	2, 6	L	01, 02, 06				
		1	2, 6	L	11, 12, 14, 15, 16				
		1	2, 6	L	51, 52, 54, 55, 56				
		1	3, 7	L	12, 15, 16				
13									CONNECTOR
	05120794AA	1	2, 6	L	11, 12, 14, 15, 16				
		1	2, 6	L	51, 52, 54, 55, 56				
		1	3, 7	L	12, 15, 16				
14									WIRING, Headlamp to Dash
	05114935AA	1	2, 6	L	11, 12, 14, 15, 16				
		1	2, 6	L	51, 52, 54, 55, 56				
		1	3, 7	L	12, 15, 16				
15									TERMINAL
	05103881AA	1	2, 6	L	11, 12, 14, 15, 16				
		1	2, 6	L	51, 52, 54, 55, 56				
		1	3, 7	L	12, 15, 16				
16									CONNECTOR

SPRINTER (VA)

SERIES	LINE	BODY	ENGINE	TRANSMISSION
L = LOWLINE	3 = HD DODGE 2WD 6 = Lt. Duty DODGE 4WD 2 = Med. Duty DODGE 2WD 7 = Med. Duty DODGE 4WD	55 = Wagon 140" 54 = Wagon 118" 52 = Wagon 140" 51 = Wagon 118" 12 = Van 140" 11 = Van 118" 06 = Front Section 158" 14 = Van 118" 15 = Van 140" 16 = Van 158" 56 = Wagon 158" 01 = Chassis Forward Control 118" 02 = Chassis Forward Control 140"	EX8 = Engine-2.7L I5 Mercedes Turbo Diesel	DGJ = Transmission-5-Spd. Automatic,W5A580

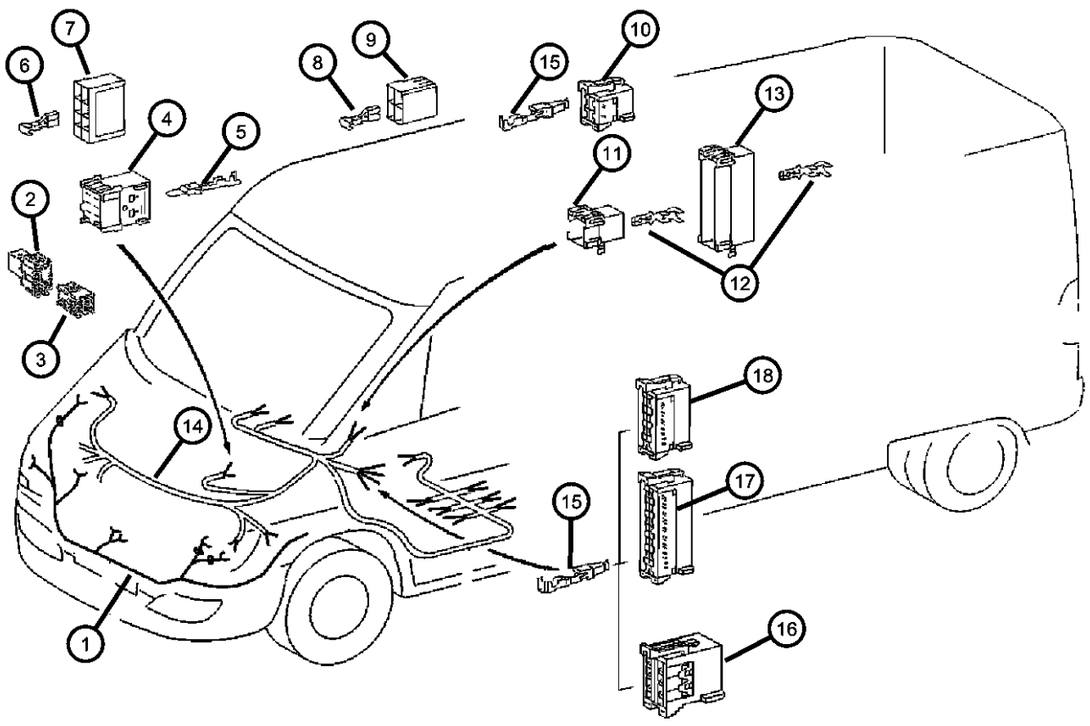

ITEM	PART NUMBER	QTY	LINE	SERIES	BODY	ENGINE	TRANS	TRIM	DESCRIPTION
	05120796AA	1	2, 6	L	11, 12, 14, 15, 16				
		1	2, 6	L	51, 52, 54, 55, 56				
		1	3, 7	L	12, 15, 16				
17									CONNECTOR
	05120789AA	1	2, 6	L	11, 12, 14, 15, 16				
		1	2, 6	L	51, 52, 54, 55, 56				
		1	3, 7	L	12, 15, 16				
18									CONNECTOR
	05120788AA	1	2, 6	L	11, 12, 14, 15, 16				
		1	2, 6	L	51, 52, 54, 55, 56				
		1	3, 7	L	12, 15, 16				

SPRINTER (VA)

SERIES	LINE	BODY	ENGINE	TRANSMISSION
L = LOWLINE	3 = HD DODGE 2WD 6 = Lt. Duty DODGE 4WD 2 = Med. Duty DODGE 2WD 7 = Med. Duty DODGE 4WD	55 = Wagon 140" 54 = Wagon 118" 52 = Wagon 140" 51 = Wagon 118" 12 = Van 140" 11 = Van 118" 06 = Front Section 158" 14 = Van 118" 15 = Van 140" 16 = Van 158" 56 = Wagon 158" 01 = Chassis Forward Control 118" 02 = Chassis Forward Control 140"	EX8 = Engine-2.7L I5 Mercedes Turbo Diesel	DGJ = Transmission-5-Spd. Automatic,W5A580

Wiring - Instrument Panel
Figure 8-1405

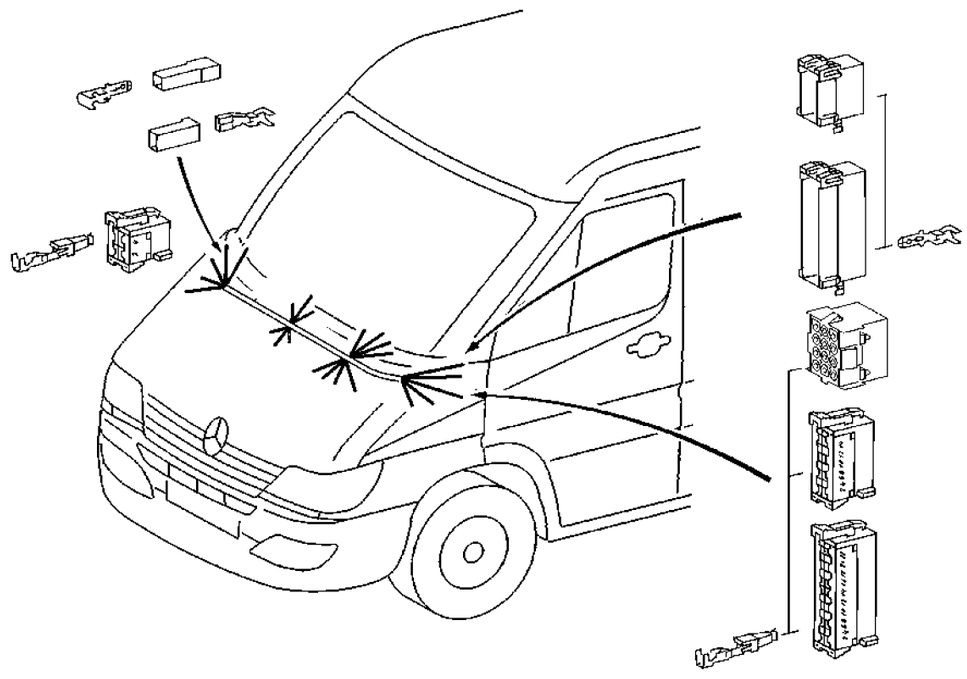

ITEM	PART NUMBER	QTY	LINE	SERIES	BODY	ENGINE	TRANS	TRIM	DESCRIPTION
1									WIRING, Instrument Panel
	05114933AA	1	2, 6	L	11, 12, 14, 15, 16				Built to order by VIN
		1	2, 6	L	51, 52, 54, 55, 56				Built to order by VIN
		1	3, 7	L	12, 15, 16				Built to order by VIN
2									INSULATOR
	05133393AA	1	2, 6	L	11, 12, 14, 15, 16				
		1	2, 6	L	51, 52, 54, 55, 56				
		1	3, 7	L	12, 15, 16				
3									CONNECTOR
	05120793AA	1	2, 6	L	11, 12, 14, 15, 16				
		1	2, 6	L	51, 52, 54, 55, 56				
		1	3, 7	L	12, 15, 16				
4									TERMINAL, Male
	05133377AA	1	2, 6	L	01, 02, 06				
		1	2, 6	L	11, 12, 14, 15, 16				
		1	2, 6	L	51, 52, 54, 55, 56				
		1	3, 7	L	12, 15, 16				
5									CONNECTOR
	05120675AA	1	2, 6	L	11, 12, 14, 15, 16				
		1	2, 6	L	51, 52, 54, 55, 56				
		1	3, 7	L	12, 15, 16				
6									CONNECTOR
	05120787AA	1	2, 6	L	11, 12, 14, 15, 16				

SPRINTER (VA)

SERIES	LINE	BODY	ENGINE	TRANSMISSION
L = LOWLINE	3 = HD DODGE 2WD 6 = Lt. Duty DODGE 4WD 2 = Med. Duty DODGE 2WD 7 = Med. Duty DODGE 4WD	55 = Wagon 140" 54 = Wagon 118" 52 = Wagon 140" 51 = Wagon 118" 12 = Van 140" 11 = Van 118" 06 = Front Section 158" 14 = Van 118" 15 = Van 140" 16 = Van 158" 56 = Wagon 158" 01 = Chassis Forward Control 118" 02 = Chassis Forward Control 140"	EX8 = Engine-2.7L I5 Mercedes Turbo Diesel	DGJ = Transmission-5-Spd. Automatic,W5A580

Wiring - Instrument Panel
Figure 8-1405

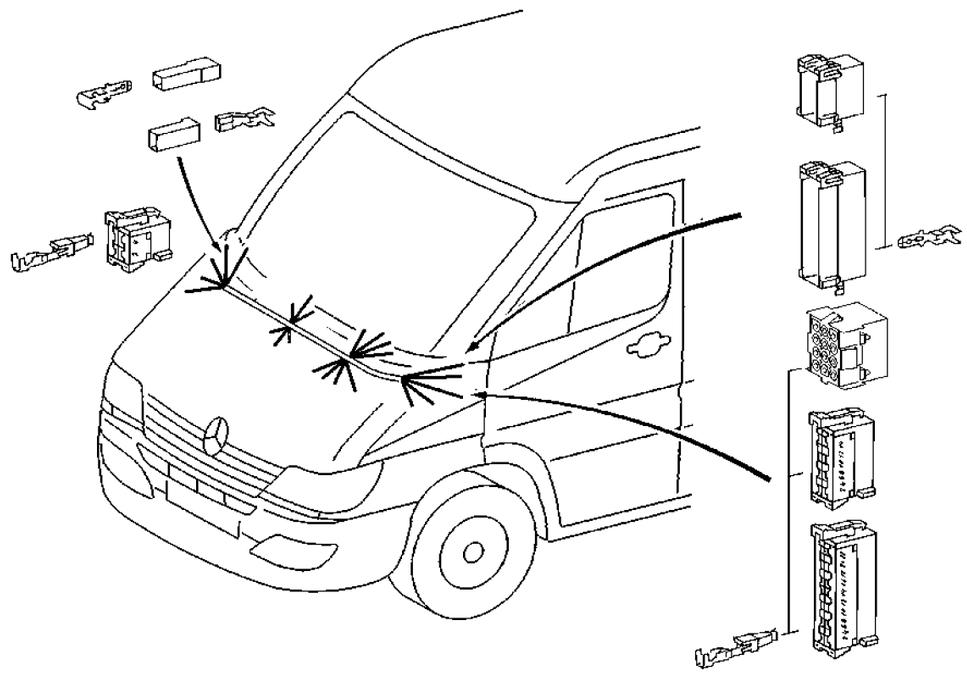

ITEM	PART NUMBER	QTY	LINE	SERIES	BODY	ENGINE	TRANS	TRIM	DESCRIPTION
		1	2, 6	L	51, 52, 54, 55, 56				
		1	3, 7	L	12, 15, 16				
7									CONNECTOR
	05120789AA	1	2, 6	L	11, 12, 14, 15, 16				
		1	2, 6	L	51, 52, 54, 55, 56				
		1	3, 7	L	12, 15, 16				
8									TERMINAL
	05103881AA	1	2, 6	L	11, 12, 14, 15, 16				
		1	2, 6	L	51, 52, 54, 55, 56				
		1	3, 7	L	12, 15, 16				
9									CONNECTOR
	05120785AA	1	2, 6	L	11, 12, 14, 15, 16				
		1	2, 6	L	51, 52, 54, 55, 56				
		1	3, 7	L	12, 15, 16				
10									CONNECTOR
	05120684AA	1	2, 6	L	11, 12, 14, 15, 16				
		1	2, 6	L	51, 52, 54, 55, 56				
		1	3, 7	L	12, 15, 16				
11									TERMINAL, Male
	05133391AA	99	2, 6	L	11, 12, 14, 15, 16				
		99	2, 6	L	51, 52, 54, 55, 56				
		99	3, 7	L	12, 15, 16				
12									INSULATOR

SPRINTER (VA)

SERIES	LINE	BODY	ENGINE	TRANSMISSION
L = LOWLINE	3 = HD DODGE 2WD 6 = Lt. Duty DODGE 4WD 2 = Med. Duty DODGE 2WD 7 = Med. Duty DODGE 4WD	55 = Wagon 140" 54 = Wagon 118" 52 = Wagon 140" 51 = Wagon 118" 12 = Van 140" 11 = Van 118" 06 = Front Section 158" 14 = Van 118" 15 = Van 140" 16 = Van 158" 56 = Wagon 158" 01 = Chassis Forward Control 118" 02 = Chassis Forward Control 140"	EX8 = Engine-2.7L I5 Mercedes Turbo Diesel	DGJ = Transmission-5-Spd. Automatic,W5A580

Wiring - Instrument Panel
Figure 8-1405

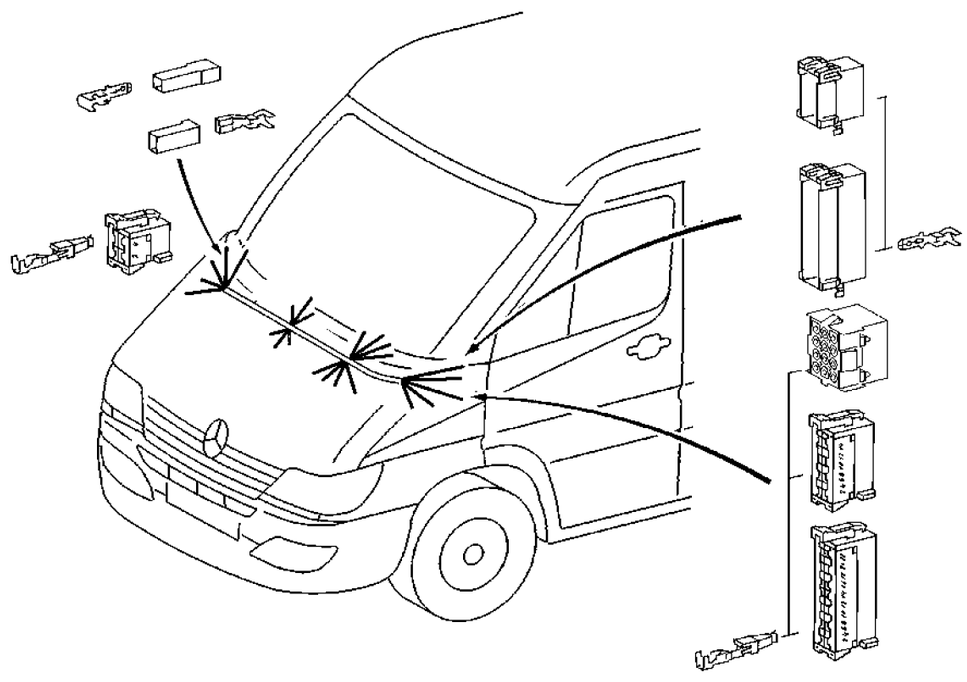

ITEM	PART NUMBER	QTY	LINE	SERIES	BODY	ENGINE	TRANS	TRIM	DESCRIPTION
	05120685AA	1	2, 6	L	11, 12, 14, 15, 16				
		1	2, 6	L	51, 52, 54, 55, 56				
		1	3, 7	L	12, 15, 16				
13									TERMINAL, Female
	05103871AA	1	2, 6	L	11, 12, 14, 15, 16				
		1	2, 6	L	51, 52, 54, 55, 56				
		1	3, 7	L	12, 15, 16				
-14									WIRING, Instrument Panel Jumper
	05133418AA	1	2, 6	L	11, 12, 14, 15, 16				Ash Tray
		1	2, 6	L	51, 52, 54, 55, 56				Ash Tray
		1	3, 7	L	12, 15, 16				Ash Tray

SPRINTER (VA)

SERIES	LINE	BODY	ENGINE	TRANSMISSION
L = LOWLINE	3 = HD DODGE 2WD 6 = Lt. Duty DODGE 4WD 2 = Med. Duty DODGE 2WD 7 = Med. Duty DODGE 4WD	55 = Wagon 140" 54 = Wagon 118" 52 = Wagon 140" 51 = Wagon 118" 12 = Van 140" 11 = Van 118" 06 = Front Section 158" 14 = Van 118" 15 = Van 140" 16 = Van 158" 56 = Wagon 158" 01 = Chassis Forward Control 118" 02 = Chassis Forward Control 140"	EX8 = Engine-2.7L I5 Mercedes Turbo Diesel	DGJ = Transmission-5-Spd. Automatic,W5A580

Wiring - Body & Accessories
Figure 8-1505

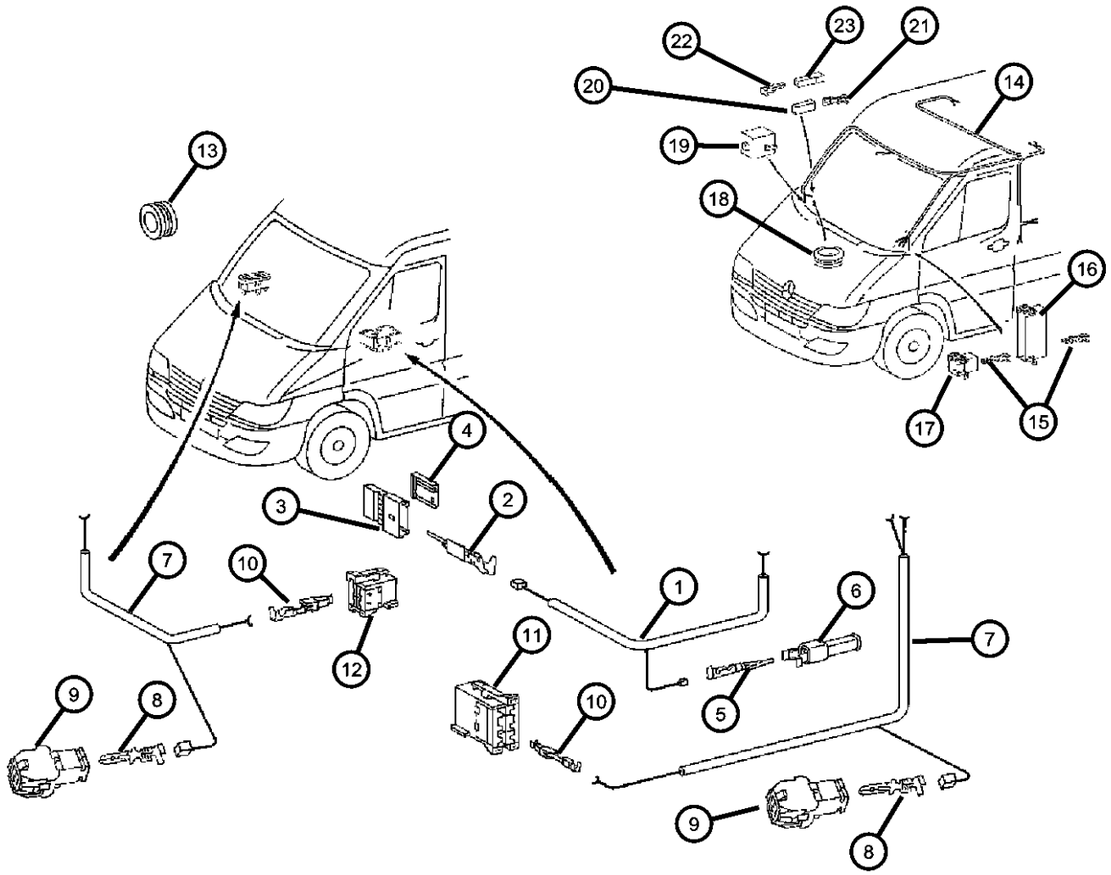

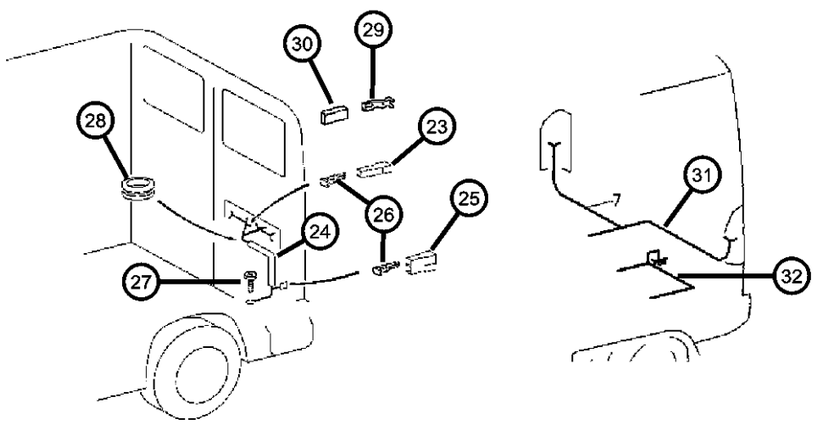

ITEM	PART NUMBER	QTY	LINE	SERIES	BODY	ENGINE	TRANS	TRIM	DESCRIPTION
1									WIRING, Mirror Jumper
	05120224AA	1	2, 6	L	11, 12, 14, 15, 16				
		1	2, 6	L	51, 52, 54, 55, 56				
		1	3, 7	L	12, 15, 16				
2									TERMINAL, Male
	05133990AA	99	2, 6	L	11, 12, 14, 15, 16				
		99	2, 6	L	51, 52, 54, 55, 56				
		99	3, 7	L	12, 15, 16				
3									INSULATOR, 6 Way
	05133330AA	1	2, 6	L	11, 12, 14, 15, 16				
		1	2, 6	L	51, 52, 54, 55, 56				
		1	3, 7	L	12, 15, 16				
4									CONNECTOR, Instrument cluster
	05133331AA	1	2, 6	L	11, 12, 14, 15, 16				
		1	2, 6	L	51, 52, 54, 55, 56				
		1	3, 7	L	12, 15, 16				
5									TERMINAL
	05133387AA	1	2, 6	L	01, 02, 06				
		1	2, 6	L	11, 12, 14, 15, 16				
		1	2, 6	L	51, 52, 54, 55, 56				
		1	3, 7	L	12, 15, 16				
6									CONNECTOR
	05120744AA	1	2, 6	L	11, 12, 14, 15, 16				

SPRINTER (VA)

SERIES	LINE	BODY	ENGINE	TRANSMISSION
L = LOWLINE	3 = HD DODGE 2WD 6 = Lt. Duty DODGE 4WD 2 = Med. Duty DODGE 2WD 7 = Med. Duty DODGE 4WD	55 = Wagon 140" 54 = Wagon 118" 52 = Wagon 140" 51 = Wagon 118" 12 = Van 140" 11 = Van 118" 06 = Front Section 158" 14 = Van 118" 15 = Van 140" 16 = Van 158" 56 = Wagon 158" 01 = Chassis Forward Control 118" 02 = Chassis Forward Control 140"	EX8 = Engine-2.7L I5 Mercedes Turbo Diesel	DGJ = Transmission-5-Spd. Automatic,W5A580

AR = use ase required - = Non illustrrated part

Wiring - Body & Accessories
Figure 8-1505

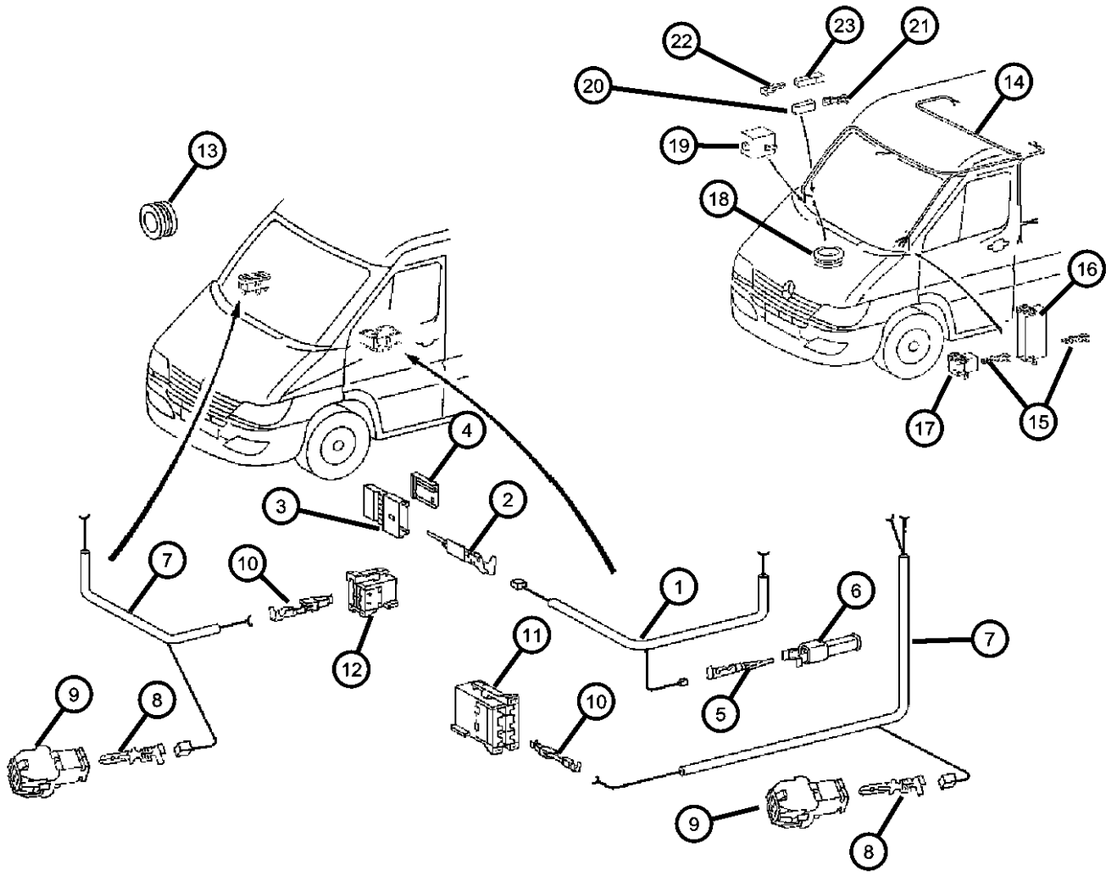

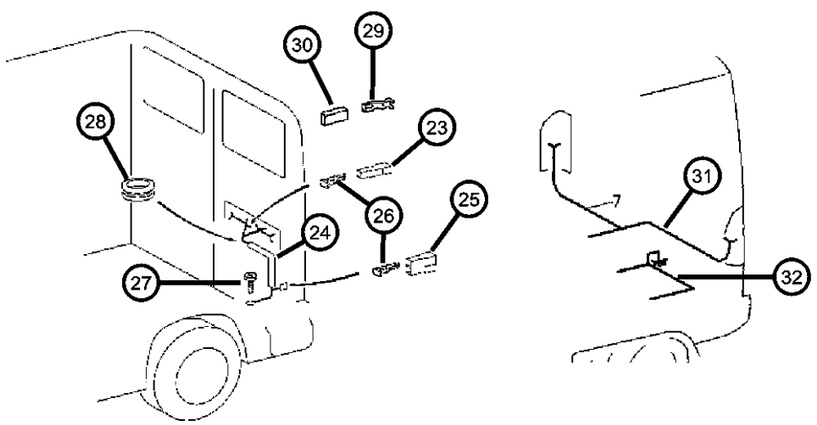

ITEM	PART NUMBER	QTY	LINE	SERIES	BODY	ENGINE	TRANS	TRIM	DESCRIPTION
		1	2, 6	L	51, 52, 54, 55, 56				
		1	3, 7	L	12, 15, 16				
7									WIRING, Power Window
	05120220AA	1	2, 6	L	11, 12, 14, 15, 16				Driver Side
		1	2, 6	L	51, 52, 54, 55, 56				Driver Side
		1	3, 7	L	12, 15, 16				Driver Side
	05120222AA	1	2, 6	L	11, 12, 14, 15, 16				Passenger Side
		1	2, 6	L	51, 52, 54, 55, 56				Passenger Side
		1	3, 7	L	12, 15, 16				Passenger Side
8									TERMINAL, Male
	05133378AA	1	2, 6	L	11, 12, 14, 15, 16				
		1	2, 6	L	51, 52, 54, 55, 56				
		1	3, 7	L	12, 15, 16				
9									CONNECTOR
	05103895AA	1	2, 6	L	11, 12, 14, 15, 16				
		1	2, 6	L	51, 52, 54, 55, 56				
		1	3, 7	L	12, 15, 16				
10									TERMINAL
	05103881AA	1	2, 6	L	11, 12, 14, 15, 16				
		1	2, 6	L	51, 52, 54, 55, 56				
		1	3, 7	L	12, 15, 16				
11									CONNECTOR
	05120786AA	1	2, 6	L	11, 12, 14, 15, 16				

SPRINTER (VA)

SERIES	LINE	BODY	ENGINE	TRANSMISSION
L = LOWLINE	3 = HD DODGE 2WD 6 = Lt. Duty DODGE 4WD 2 = Med. Duty DODGE 2WD 7 = Med. Duty DODGE 4WD	55 = Wagon 140" 54 = Wagon 118" 52 = Wagon 140" 51 = Wagon 118" 12 = Van 140" 11 = Van 118" 06 = Front Section 158" 14 = Van 118" 15 = Van 140" 16 = Van 158" 56 = Wagon 158" 01 = Chassis Forward Control 118" 02 = Chassis Forward Control 140"	EX8 = Engine-2.7L I5 Mercedes Turbo Diesel	DGJ = Transmission-5-Spd. Automatic,W5A580

Wiring - Body & Accessories
Figure 8-1505

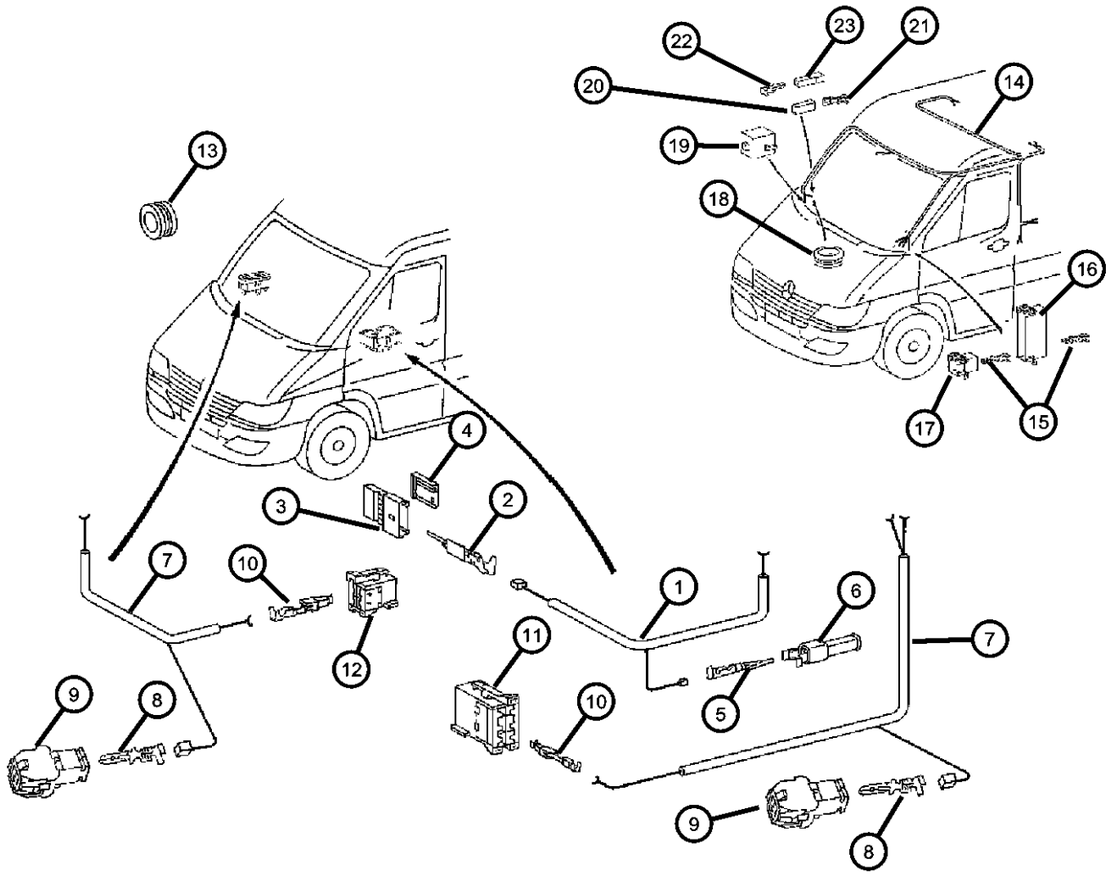

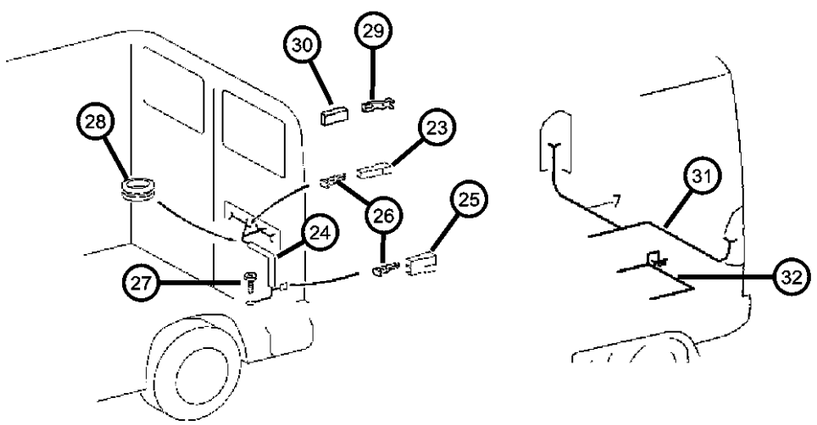

ITEM	PART NUMBER	QTY	LINE	SERIES	BODY	ENGINE	TRANS	TRIM	DESCRIPTION
		1	2, 6	L	51, 52, 54, 55, 56				
		1	3, 7	L	12, 15, 16				
12									CONNECTOR
	05120785AA	1	2, 6	L	11, 12, 14, 15, 16				
		1	2, 6	L	51, 52, 54, 55, 56				
		1	3, 7	L	12, 15, 16				
13									GROMMET
	05125942AA	1	2, 6	L	11, 12, 14, 15, 16				
		1	2, 6	L	51, 52, 54, 55, 56				
		1	3, 7	L	12, 15, 16				
14									WIRING, Body
	05114931AA	1	2, 6	L	11, 12, 14, 15, 16				
		1	2, 6	L	51, 52, 54, 55, 56				
		1	3, 7	L	12, 15, 16				
15									TERMINAL, Male
	05133377AA	1	2, 6	L	01, 02, 06				
		1	2, 6	L	11, 12, 14, 15, 16				
		1	2, 6	L	51, 52, 54, 55, 56				
		1	3, 7	L	12, 15, 16				
16									CONNECTOR
	05120794AA	1	2, 6	L	11, 12, 14, 15, 16				
		1	2, 6	L	51, 52, 54, 55, 56				
		1	3, 7	L	12, 15, 16				

SPRINTER (VA)

SERIES	LINE	BODY	ENGINE	TRANSMISSION
L = LOWLINE	3 = HD DODGE 2WD 6 = Lt. Duty DODGE 4WD 2 = Med. Duty DODGE 2WD 7 = Med. Duty DODGE 4WD	55 = Wagon 140" 54 = Wagon 118" 52 = Wagon 140" 51 = Wagon 118" 12 = Van 140" 11 = Van 118" 06 = Front Section 158" 14 = Van 118" 15 = Van 140" 16 = Van 158" 56 = Wagon 158" 01 = Chassis Forward Control 118" 02 = Chassis Forward Control 140"	EX8 = Engine-2.7L I5 Mercedes Turbo Diesel	DGJ = Transmission-5-Spd. Automatic,W5A580

AR = use ase required - = Non illustrrated part

Wiring - Body & Accessories
Figure 8-1505

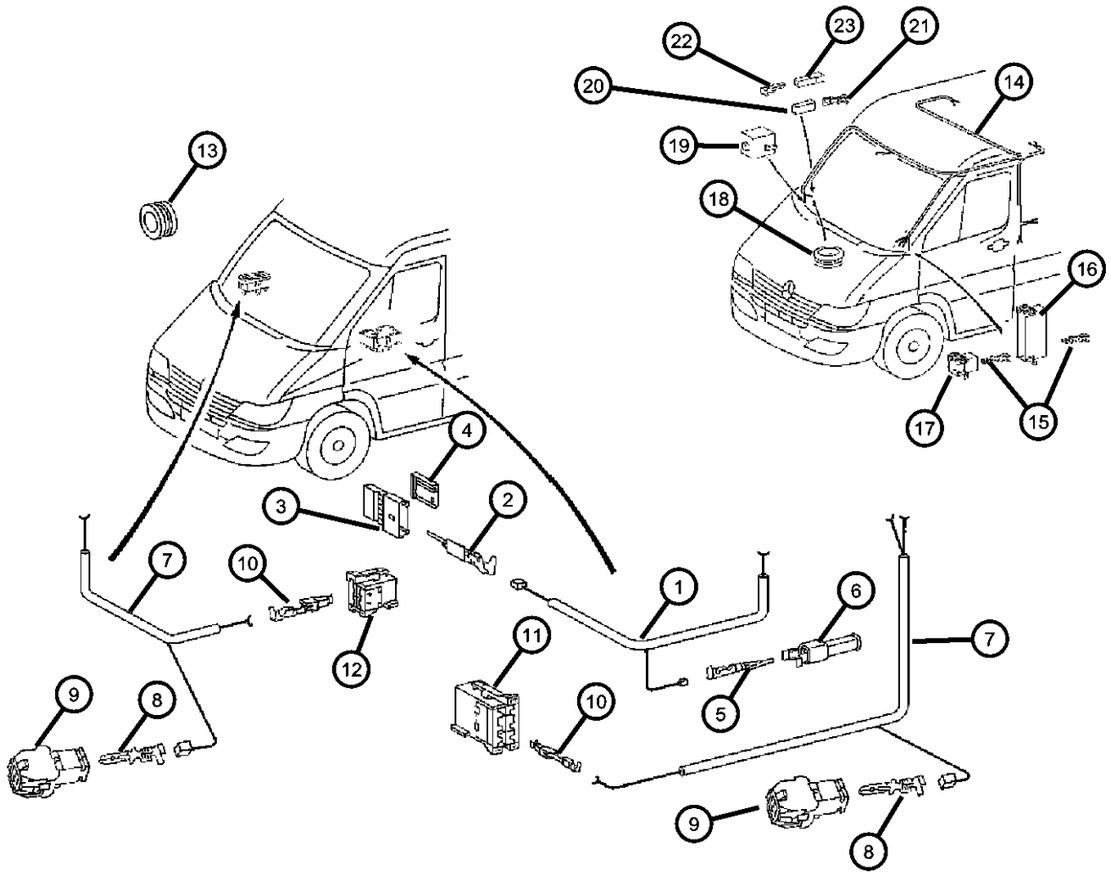

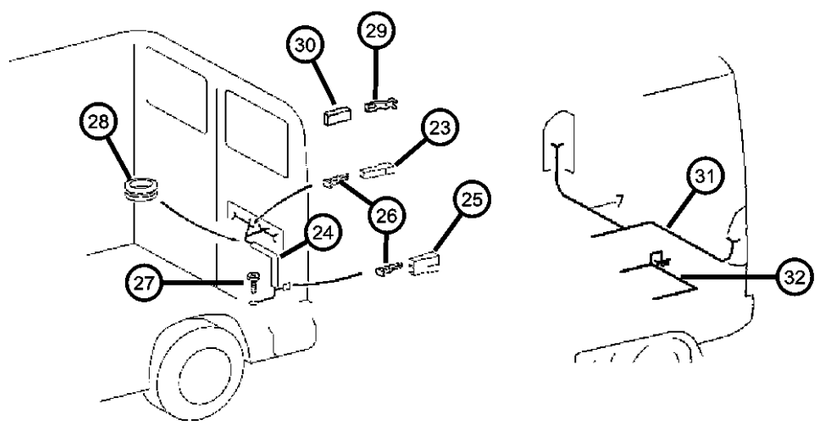

ITEM	PART NUMBER	QTY	LINE	SERIES	BODY	ENGINE	TRANS	TRIM	DESCRIPTION
17									CONNECTOR
	05120791AA	1	2, 6	L	11, 12, 14, 15, 16				
		1	2, 6	L	51, 52, 54, 55, 56				
		1	3, 7	L	12, 15, 16				
18									GROMMET, Chassis Wiring
	05133408AA	1	2, 6	L	11, 12, 14, 15, 16				
		1	2, 6	L	51, 52, 54, 55, 56				
		1	3, 7	L	12, 15, 16				
19									INSULATOR, 2 Way
	05133401AA	1	2, 6	L	11, 12, 14, 15, 16				
		1	2, 6	L	51, 52, 54, 55, 56				
		1	3, 7	L	12, 15, 16				
20									CONNECTOR
	05120684AA	1	2, 6	L	11, 12, 14, 15, 16				
		1	2, 6	L	51, 52, 54, 55, 56				
		1	3, 7	L	12, 15, 16				
21									TERMINAL, Female
	05103871AA	1	2, 6	L	11, 12, 14, 15, 16				
		1	2, 6	L	51, 52, 54, 55, 56				
		1	3, 7	L	12, 15, 16				
22									TERMINAL, Male
	05133358AA	1	2, 6	L	11, 12, 14, 15, 16				
		1	2, 6	L	51, 52, 54, 55, 56				

SPRINTER (VA)

SERIES	LINE	BODY	ENGINE	TRANSMISSION
L = LOWLINE	3 = HD DODGE 2WD 6 = Lt. Duty DODGE 4WD 2 = Med. Duty DODGE 2WD 7 = Med. Duty DODGE 4WD	55 = Wagon 140" 54 = Wagon 118" 52 = Wagon 140" 51 = Wagon 118" 12 = Van 140" 11 = Van 118" 06 = Front Section 158" 14 = Van 118" 15 = Van 140" 16 = Van 158" 56 = Wagon 158" 01 = Chassis Forward Control 118" 02 = Chassis Forward Control 140"	EX8 = Engine-2.7L I5 Mercedes Turbo Diesel	DGJ = Transmission-5-Spd. Automatic,W5A580

AR = use ase required - = Non illustrrated part

Wiring - Body & Accessories
Figure 8-1505

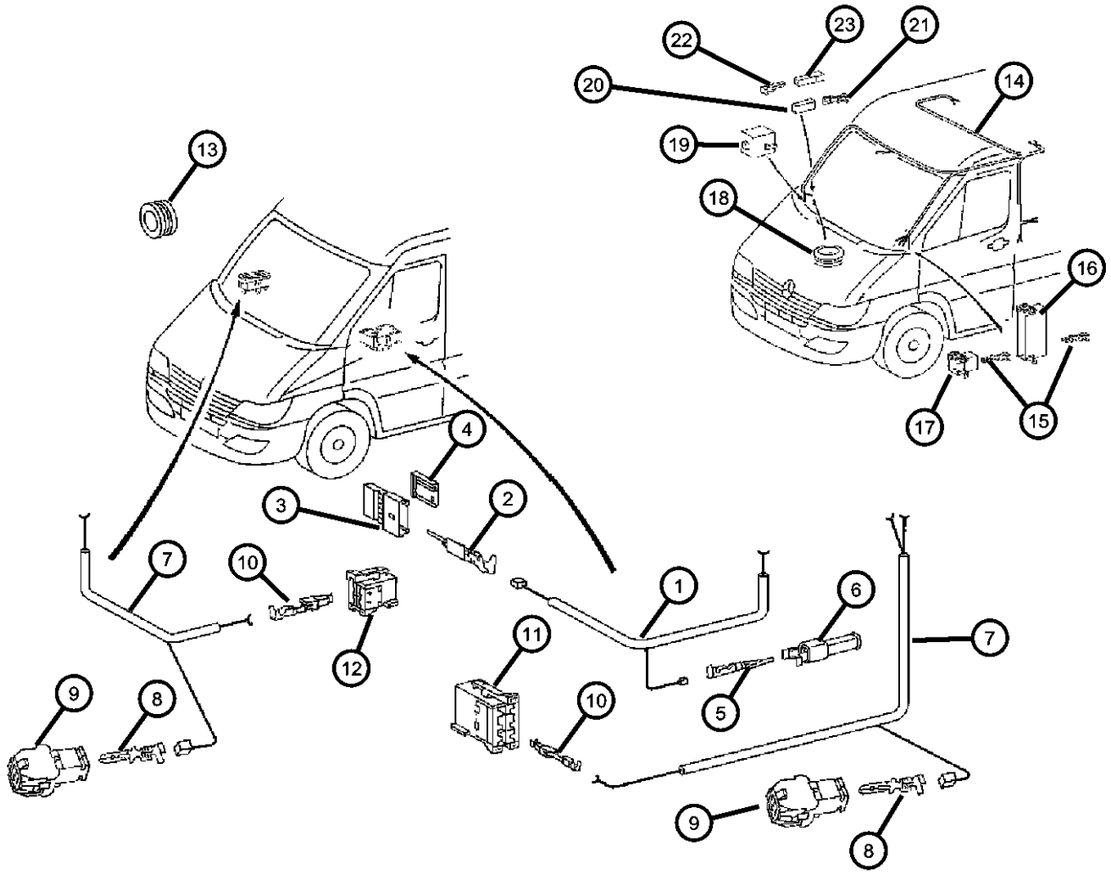

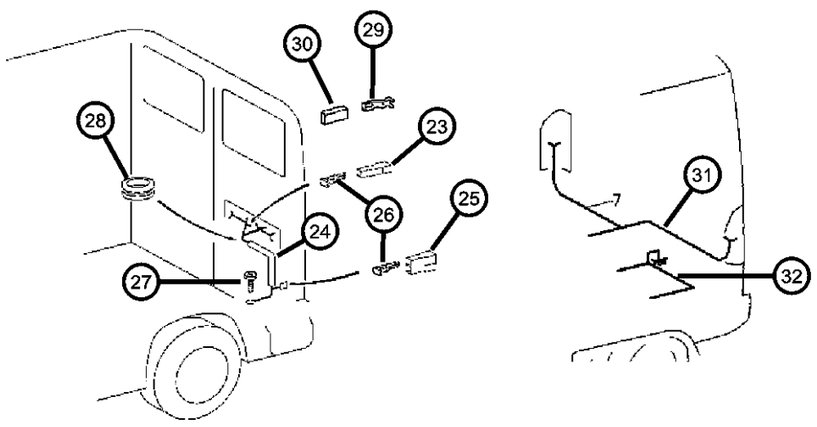

ITEM	PART NUMBER	QTY	LINE	SERIES	BODY	ENGINE	TRANS	TRIM	DESCRIPTION
		1	3, 7	L	12, 15, 16				
23									INSULATOR
	05120685AA	1	2, 6	L	11, 12, 14, 15, 16				
		1	2, 6	L	51, 52, 54, 55, 56				
		1	3, 7	L	12, 15, 16				
24									WIRING, Rear Door
	05129584AA	1	2, 6	L	11, 12, 14, 15, 16				
		1	2, 6	L	51, 52, 54, 55, 56				
		1	3, 7	L	12, 15, 16				
25									CONNECTOR
	05103751AA	1	2, 6	L	11, 12, 14, 15, 16				
		1	2, 6	L	51, 52, 54, 55, 56				
		1	3, 7	L	12, 15, 16				
26									TERMINAL, Male
	05103798AA	1	2, 6	L	11, 12, 14, 15, 16				
		1	2, 6	L	51, 52, 54, 55, 56				
		1	3, 7	L	12, 15, 16				
27									SCREW, Tapping
	05132835AA	1	2, 6	L	11, 12, 14, 15, 16				
		1	2, 6	L	51, 52, 54, 55, 56				
		1	3, 7	L	12, 15, 16				
28									GROMMET
	05125931AA	1	2, 6	L	11, 12, 14, 15, 16				

SPRINTER (VA)

SERIES	LINE	BODY	ENGINE	TRANSMISSION
L = LOWLINE	3 = HD DODGE 2WD 6 = Lt. Duty DODGE 4WD 2 = Med. Duty DODGE 2WD 7 = Med. Duty DODGE 4WD	55 = Wagon 140" 54 = Wagon 118" 52 = Wagon 140" 51 = Wagon 118" 12 = Van 140" 11 = Van 118" 06 = Front Section 158" 14 = Van 118" 15 = Van 140" 16 = Van 158" 56 = Wagon 158" 01 = Chassis Forward Control 118" 02 = Chassis Forward Control 140"	EX8 = Engine-2.7L I5 Mercedes Turbo Diesel	DGJ = Transmission-5-Spd. Automatic,W5A580

Wiring - Body & Accessories
Figure 8-1505

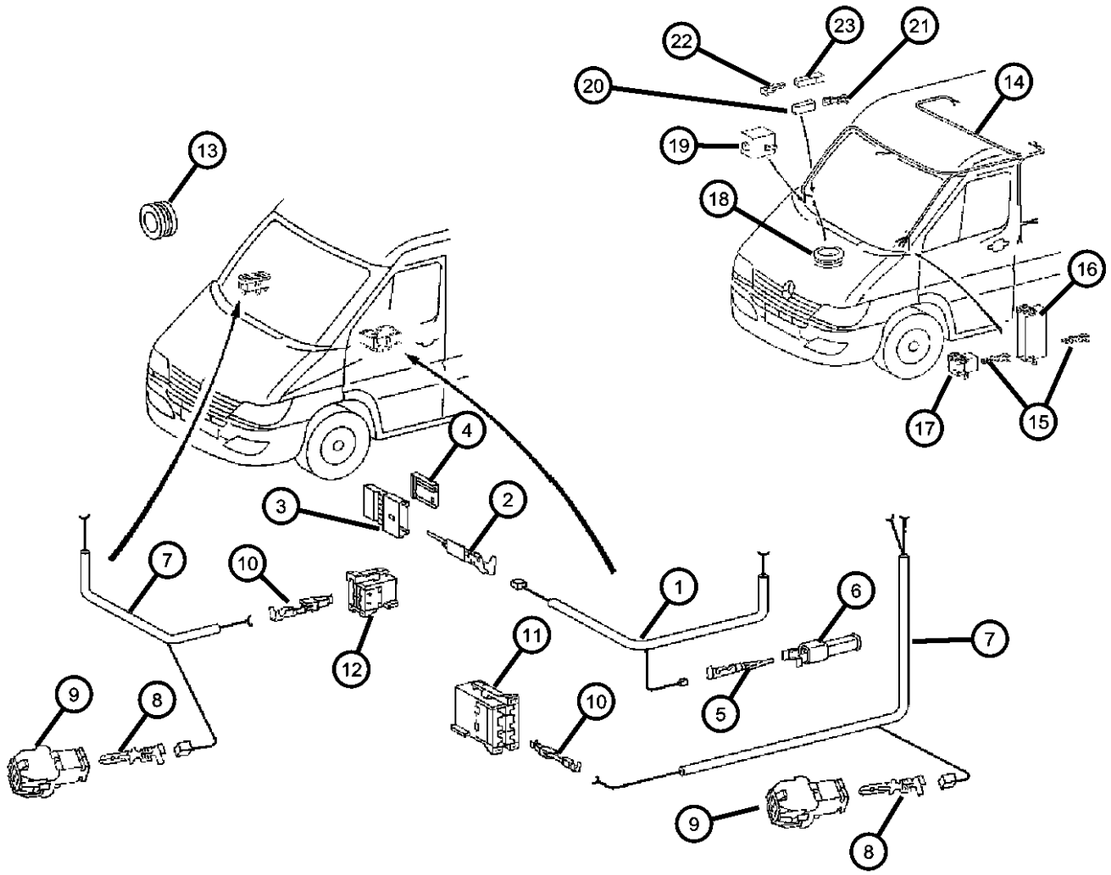

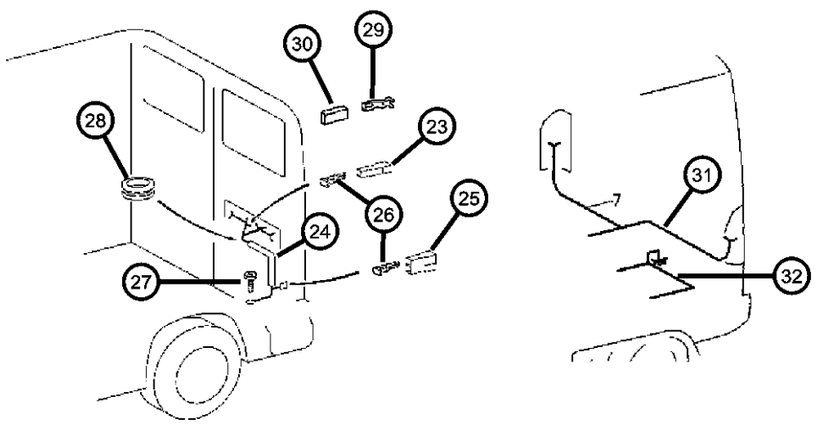

ITEM	PART NUMBER	QTY	LINE	SERIES	BODY	ENGINE	TRANS	TRIM	DESCRIPTION
		1	2, 6	L	51, 52, 54, 55, 56				
		1	3, 7	L	12, 15, 16				
29									CONNECTOR
	05120684AA	1	2, 6	L	11, 12, 14, 15, 16				
		1	2, 6	L	51, 52, 54, 55, 56				
		1	3, 7	L	12, 15, 16				
30									TERMINAL, Female
	05114451AA	2	2, 6	L	11, 12, 14, 15, 16				
		2	2, 6	L	51, 52, 54, 55, 56				
		2	3, 7	L	12, 15, 16				
31									WIRING, Rear Body
	05133399AA	1	2, 6	L	11, 12, 14, 15, 16				
		1	2, 6	L	51, 52, 54, 55, 56				
		1	3, 7	L	12, 15, 16				
32									WIRING, Trailer Tow
	05133400AA	1	2, 6	L	11, 12, 14, 15, 16				
		1	2, 6	L	51, 52, 54, 55, 56				
		1	3, 7	L	12, 15, 16				

SPRINTER (VA)

SERIES	LINE	BODY	ENGINE	TRANSMISSION
L = LOWLINE	3 = HD DODGE 2WD 6 = Lt. Duty DODGE 4WD 2 = Med. Duty DODGE 2WD 7 = Med. Duty DODGE 4WD	55 = Wagon 140" 54 = Wagon 118" 52 = Wagon 140" 51 = Wagon 118" 12 = Van 140" 11 = Van 118" 06 = Front Section 158" 14 = Van 118" 15 = Van 140" 16 = Van 158" 56 = Wagon 158" 01 = Chassis Forward Control 118" 02 = Chassis Forward Control 140"	EX8 = Engine-2.7L I5 Mercedes Turbo Diesel	DGJ = Transmission-5-Spd. Automatic,W5A580

Connectors Engine Compartment
Figure 8-1605

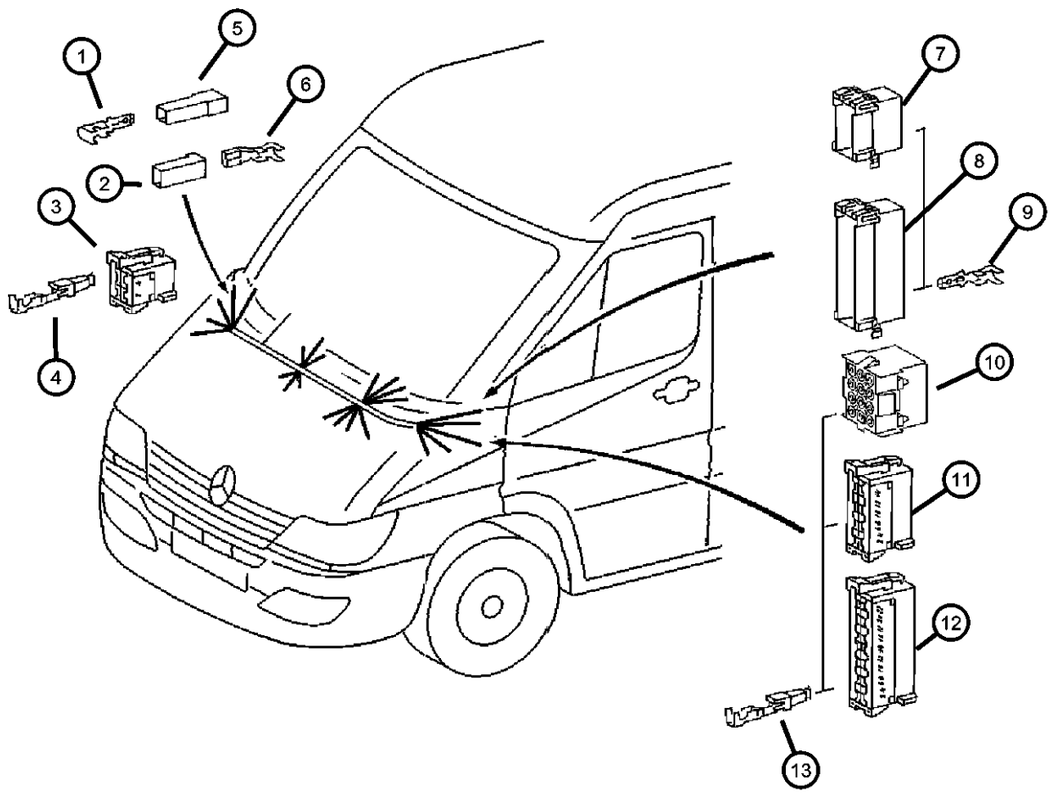

ITEM	PART NUMBER	QTY	LINE	SERIES	BODY	ENGINE	TRANS	TRIM	DESCRIPTION
1									TERMINAL, Male
	05133391AA	99	2, 6	L	11, 12, 14, 15, 16				
		99	2, 6	L	51, 52, 54, 55, 56				
		99	3, 7	L	12, 15, 16				
2									CONNECTOR
	05120684AA	1	2, 6	L	11, 12, 14, 15, 16				
		1	2, 6	L	51, 52, 54, 55, 56				
		1	3, 7	L	12, 15, 16				
3									TERMINAL
	05103882AA	1	2, 6	L	11, 12, 14, 15, 16				
		1	2, 6	L	51, 52, 54, 55, 56				
		1	3, 7	L	12, 15, 16				
4									CONNECTOR
	05120785AA	1	2, 6	L	11, 12, 14, 15, 16				
		1	2, 6	L	51, 52, 54, 55, 56				
		1	3, 7	L	12, 15, 16				
5									INSULATOR
	05120685AA	2	2, 6	L	51, 52, 54, 55, 56				
		2	2, 6	L	11, 12, 14, 15, 16				
		2	3, 7	L	12, 15, 16				
6									TERMINAL, Female
	05103871AA	99	2, 6	L	11, 12, 14, 15, 16				
		99	2, 6	L	51, 52, 54, 55, 56				

SPRINTER (VA)

SERIES	LINE	BODY	ENGINE	TRANSMISSION
L = LOWLINE	3 = HD DODGE 2WD 6 = Lt. Duty DODGE 4WD 2 = Med. Duty DODGE 2WD 7 = Med. Duty DODGE 4WD	55 = Wagon 140" 54 = Wagon 118" 52 = Wagon 140" 51 = Wagon 118" 12 = Van 140" 11 = Van 118" 06 = Front Section 158" 14 = Van 118" 15 = Van 140" 16 = Van 158" 56 = Wagon 158" 01 = Chassis Forward Control 118" 02 = Chassis Forward Control 140"	EX8 = Engine-2.7L I5 Mercedes Turbo Diesel	DGJ = Transmission-5-Spd. Automatic,W5A580

Connectors Engine Compartment
Figure 8-1605

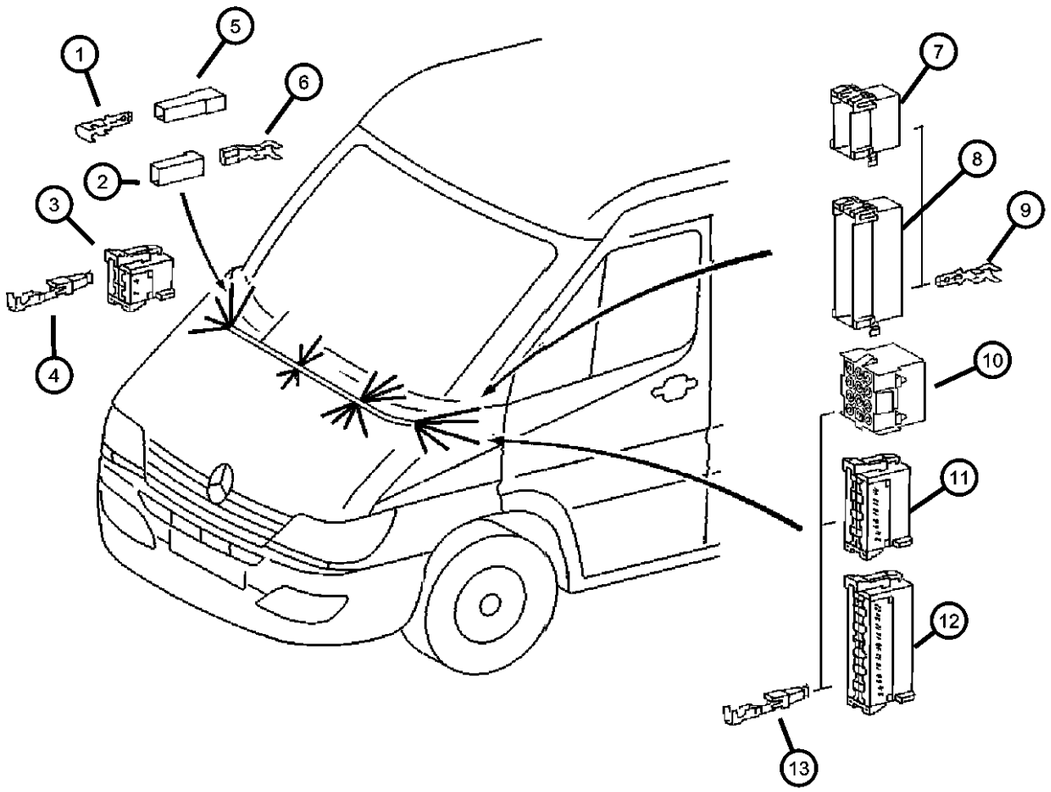

ITEM	PART NUMBER	QTY	LINE	SERIES	BODY	ENGINE	TRANS	TRIM	DESCRIPTION
		99	3, 7	L	12, 15, 16				
7									INSULATOR
	05133393AA	1	2, 6	L	11, 12, 14, 15, 16				
		1	2, 6	L	51, 52, 54, 55, 56				
		1	3, 7	L	12, 15, 16				
8									CONNECTOR
	05120793AA	1	2, 6	L	11, 12, 14, 15, 16				
		1	2, 6	L	51, 52, 54, 55, 56				
		1	3, 7	L	12, 15, 16				
9									TERMINAL, Male
	05133371AA	99	2, 6	L	11, 12, 14, 15, 16				
		99	2, 6	L	51, 52, 54, 55, 56				
		99	3, 7	L	12, 15, 16				
10									CONNECTOR
	05120675AA	1	2, 6	L	11, 12, 14, 15, 16				
		1	2, 6	L	51, 52, 54, 55, 56				
		1	3, 7	L	12, 15, 16				
11									CONNECTOR
	05120787AA	1	2, 6	L	11, 12, 14, 15, 16				
		1	2, 6	L	51, 52, 54, 55, 56				
		1	3, 7	L	12, 15, 16				
12									CONNECTOR
	05120789AA	1	2, 6	L	11, 12, 14, 15, 16				

SPRINTER (VA)

SERIES	LINE	BODY	ENGINE	TRANSMISSION
L = LOWLINE	3 = HD DODGE 2WD 6 = Lt. Duty DODGE 4WD 2 = Med. Duty DODGE 2WD 7 = Med. Duty DODGE 4WD	55 = Wagon 140" 54 = Wagon 118" 52 = Wagon 140" 51 = Wagon 118" 12 = Van 140" 11 = Van 118" 06 = Front Section 158" 14 = Van 118" 15 = Van 140" 16 = Van 158" 56 = Wagon 158" 01 = Chassis Forward Control 118" 02 = Chassis Forward Control 140"	EX8 = Engine-2.7L I5 Mercedes Turbo Diesel	DGJ = Transmission-5-Spd. Automatic,W5A580

Connectors Engine Compartment
Figure 8-1605

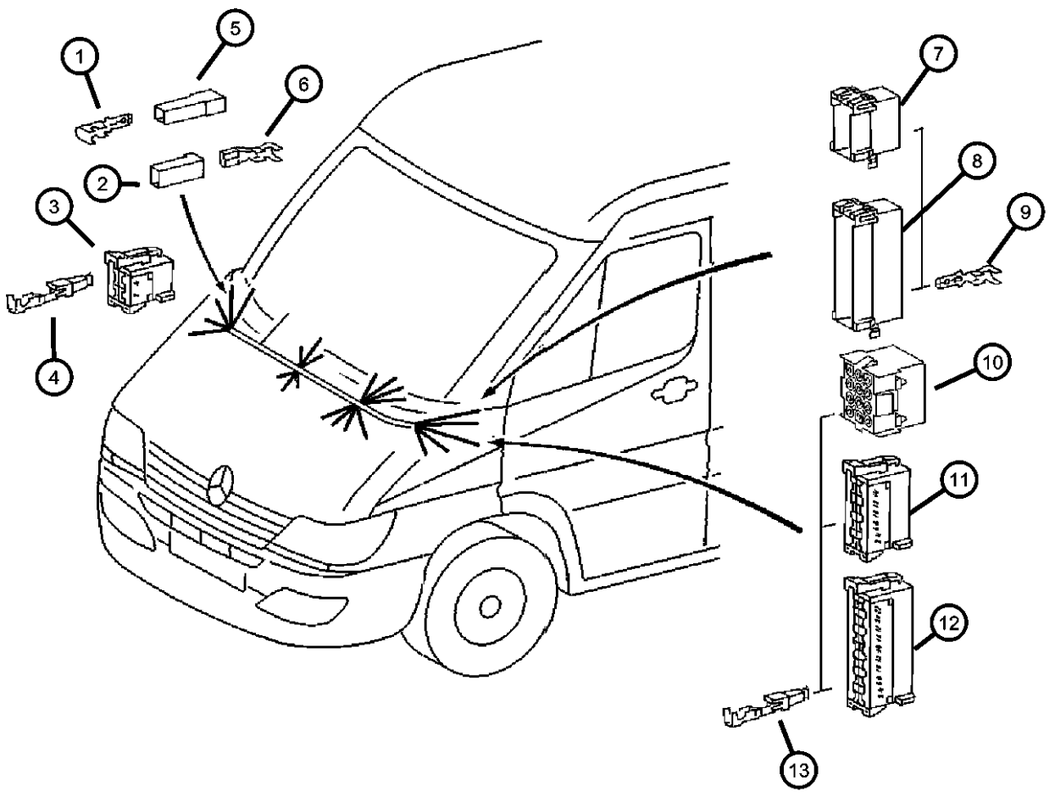

ITEM	PART NUMBER	QTY	LINE	SERIES	BODY	ENGINE	TRANS	TRIM	DESCRIPTION
		1	2, 6	L	51, 52, 54, 55, 56				
		1	3, 7	L	12, 15, 16				
13									TERMINAL
	05103881AA	1	2, 6	L	11, 12, 14, 15, 16				
		1	2, 6	L	51, 52, 54, 55, 56				
		1	3, 7	L	12, 15, 16				

SPRINTER (VA)

SERIES	LINE	BODY	ENGINE	TRANSMISSION
L = LOWLINE	3 = HD DODGE 2WD 6 = Lt. Duty DODGE 4WD 2 = Med. Duty DODGE 2WD 7 = Med. Duty DODGE 4WD	55 = Wagon 140" 54 = Wagon 118" 52 = Wagon 140" 51 = Wagon 118" 12 = Van 140" 11 = Van 118" 06 = Front Section 158" 14 = Van 118" 15 = Van 140" 16 = Van 158" 56 = Wagon 158" 01 = Chassis Forward Control 118" 02 = Chassis Forward Control 140"	EX8 = Engine-2.7L I5 Mercedes Turbo Diesel	DGJ = Transmission-5-Spd. Automatic,W5A580

Connectors Body
Figure 8-1610

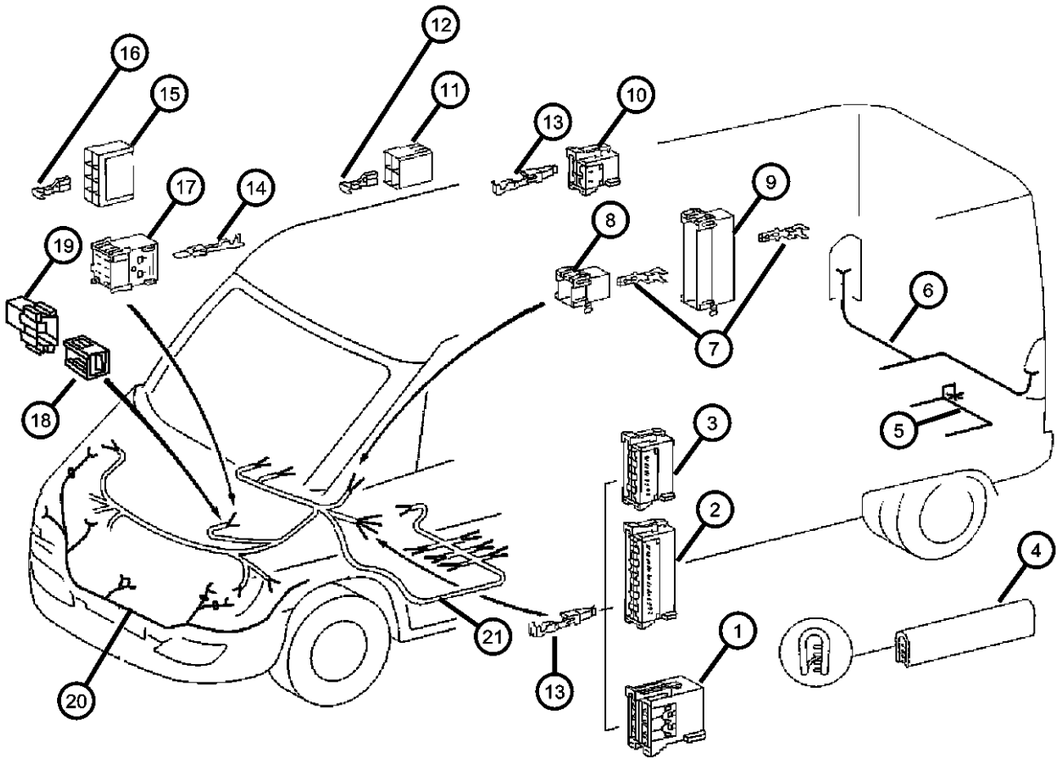

ITEM	PART NUMBER	QTY	LINE	SERIES	BODY	ENGINE	TRANS	TRIM	DESCRIPTION
1									CONNECTOR
	05120796AA	1	2, 6	L	11, 12, 14, 15, 16				
		1	2, 6	L	51, 52, 54, 55, 56				
		1	3, 7	L	12, 15, 16				
2									CONNECTOR
	05120789AA	1	2, 6	L	11, 12, 14, 15, 16				
		1	2, 6	L	51, 52, 54, 55, 56				
		1	3, 7	L	12, 15, 16				
3									CONNECTOR
	05120788AA	1	2, 6	L	11, 12, 14, 15, 16				
		1	2, 6	L	51, 52, 54, 55, 56				
		1	3, 7	L	12, 15, 16				
4									PROTECTOR
	05132391AA	1	2, 6	L	12, 15				
		2	2, 6	L	16				
		1	2, 6	L	52, 55				
		2	2, 6	L	56				
5									WIRING, Trailer Tow
	05133400AA	1	2, 6	L	11, 12, 14, 15, 16				
		1	2, 6	L	51, 52, 54, 55, 56				
		1	3, 7	L	12, 15, 16				
6									WIRING, Rear Body
	05133399AA	1	2, 6	L	11, 12, 14, 15, 16				
		1	2, 6	L	51, 52, 54, 55, 56				

SPRINTER (VA)

SERIES	LINE	BODY	ENGINE	TRANSMISSION
L = LOWLINE	3 = HD DODGE 2WD 6 = Lt. Duty DODGE 4WD 2 = Med. Duty DODGE 2WD 7 = Med. Duty DODGE 4WD	55 = Wagon 140" 54 = Wagon 118" 52 = Wagon 140" 51 = Wagon 118" 12 = Van 140" 11 = Van 118" 06 = Front Section 158" 14 = Van 118" 15 = Van 140" 16 = Van 158" 56 = Wagon 158" 01 = Chassis Forward Control 118" 02 = Chassis Forward Control 140"	EX8 = Engine-2.7L I5 Mercedes Turbo Diesel	DGJ = Transmission-5-Spd. Automatic,W5A580

AR = use ase required - = Non illustrrated part

<< RETURN TO GROUP INDEX

Connectors Body
Figure 8-1610

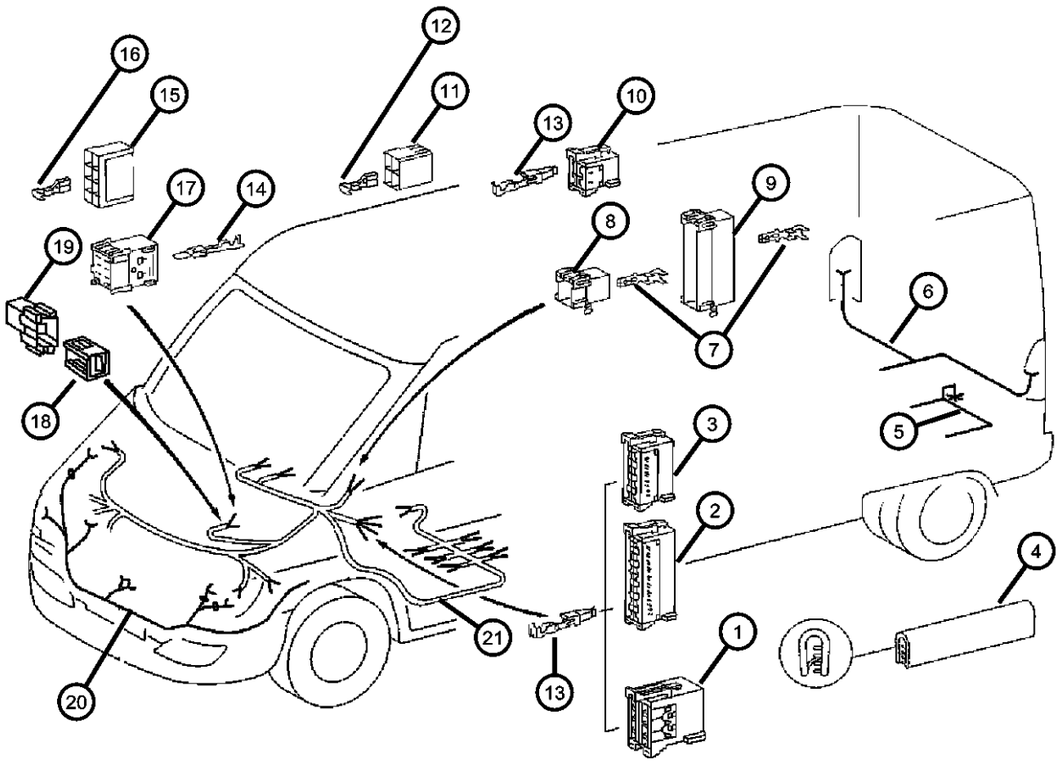

ITEM	PART NUMBER	QTY	LINE	SERIES	BODY	ENGINE	TRANS	TRIM	DESCRIPTION
		1	3, 7	L	12, 15, 16				
7									TERMINAL, Male
	05133377AA	1	2, 6	L	11, 12, 14, 15, 16				
		1	2, 6	L	51, 52, 54, 55, 56				
		1	3, 7	L	12, 15, 16				
8									CONNECTOR
	05120791AA	1	2, 6	L	11, 12, 14, 15, 16				
		1	2, 6	L	51, 52, 54, 55, 56				
		1	3, 7	L	12, 15, 16				
9									CONNECTOR
	05120794AA	1	2, 6	L	11, 12, 14, 15, 16				
		1	2, 6	L	51, 52, 54, 55, 56				
		1	3, 7	L	12, 15, 16				
10									CONNECTOR
	05120785AA	1	2, 6	L	11, 12, 14, 15, 16				
		1	2, 6	L	51, 52, 54, 55, 56				
		1	3, 7	L	12, 15, 16				
11									CONNECTOR
	05103753AA	1	2, 6	L	11, 12, 14, 15, 16				
		1	2, 6	L	51, 52, 54, 55, 56				
		1	3, 7	L	12, 15, 16				
12									TERMINAL, Female
	05133360AA	1	2, 6	L	11, 12, 14, 15, 16				

SPRINTER (VA)

SERIES	LINE	BODY	ENGINE	TRANSMISSION
L = LOWLINE	3 = HD DODGE 2WD 6 = Lt. Duty DODGE 4WD 2 = Med. Duty DODGE 2WD 7 = Med. Duty DODGE 4WD	55 = Wagon 140" 54 = Wagon 118" 52 = Wagon 140" 51 = Wagon 118" 12 = Van 140" 11 = Van 118" 06 = Front Section 158" 14 = Van 118" 15 = Van 140" 16 = Van 158" 56 = Wagon 158" 01 = Chassis Forward Control 118" 02 = Chassis Forward Control 140"	EX8 = Engine-2.7L I5 Mercedes Turbo Diesel	DGJ = Transmission-5-Spd. Automatic,W5A580

Connectors Body
Figure 8-1610

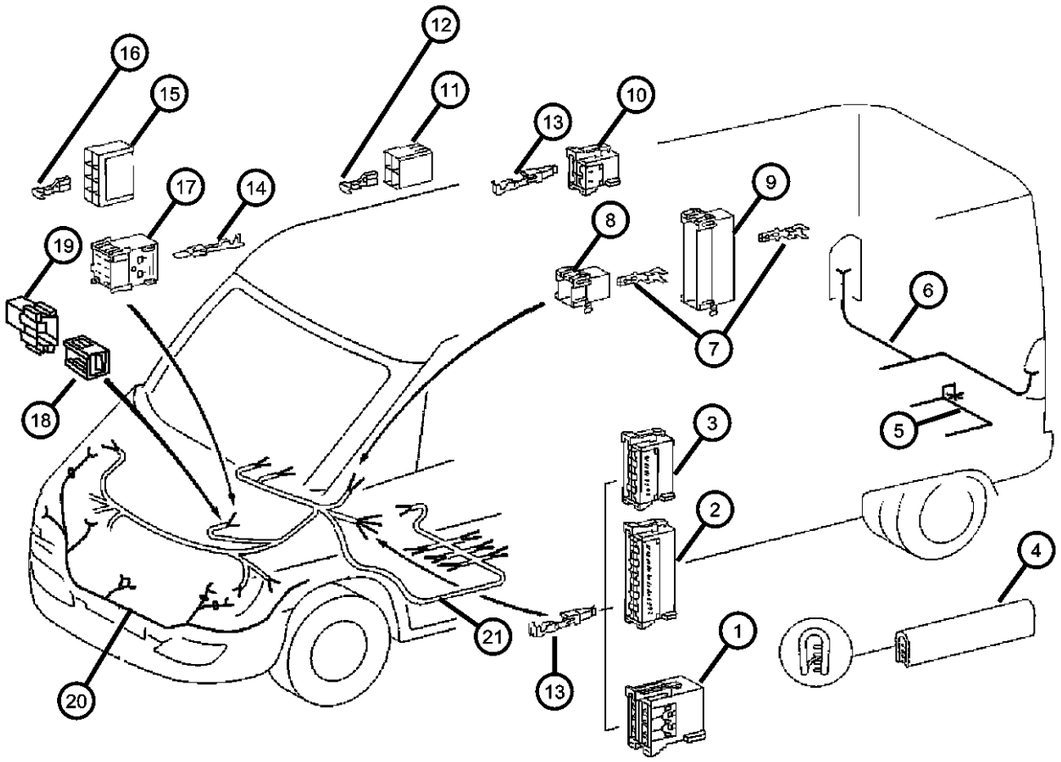

ITEM	PART NUMBER	QTY	LINE	SERIES	BODY	ENGINE	TRANS	TRIM	DESCRIPTION
		1	2, 6	L	51, 52, 54, 55, 56				
		1	3, 7	L	12, 15, 16				
13									TERMINAL
	05103881AA	1	2, 6	L	11, 12, 14, 15, 16				
		1	2, 6	L	51, 52, 54, 55, 56				
		1	3, 7	L	12, 15, 16				
14									TERMINAL, Male
	05103909AA	1	2, 6	L	11, 12, 14, 15, 16				
		1	2, 6	L	51, 52, 54, 55, 56				
		1	3, 7	L	12, 15, 16				
15									CONNECTOR
	05103752AA	1	2, 6	L	11, 12, 14, 15, 16				
		1	2, 6	L	51, 52, 54, 55, 56				
		1	3, 7	L	12, 15, 16				
16									TERMINAL, Female
	05133359AA	99	2, 6	L	11, 12, 14, 15, 16				
		99	2, 6	L	51, 52, 54, 55, 56				
		99	3, 7	L	12, 15, 16				
17									INSULATOR, 6 Way Male
	05133327AA	1	2, 6	L	11, 12, 14, 15, 16				
		1	2, 6	L	51, 52, 54, 55, 56				
		1	3, 7	L	12, 15, 16				
18									CONNECTOR, Wiring

SPRINTER (VA)

SERIES	LINE	BODY	ENGINE	TRANSMISSION
L = LOWLINE	3 = HD DODGE 2WD 6 = Lt. Duty DODGE 4WD 2 = Med. Duty DODGE 2WD 7 = Med. Duty DODGE 4WD	55 = Wagon 140" 54 = Wagon 118" 52 = Wagon 140" 51 = Wagon 118" 12 = Van 140" 11 = Van 118" 06 = Front Section 158" 14 = Van 118" 15 = Van 140" 16 = Van 158" 56 = Wagon 158" 01 = Chassis Forward Control 118" 02 = Chassis Forward Control 140"	EX8 = Engine-2.7L I5 Mercedes Turbo Diesel	DGJ = Transmission-5-Spd. Automatic,W5A580

Connectors Body
Figure 8-1610

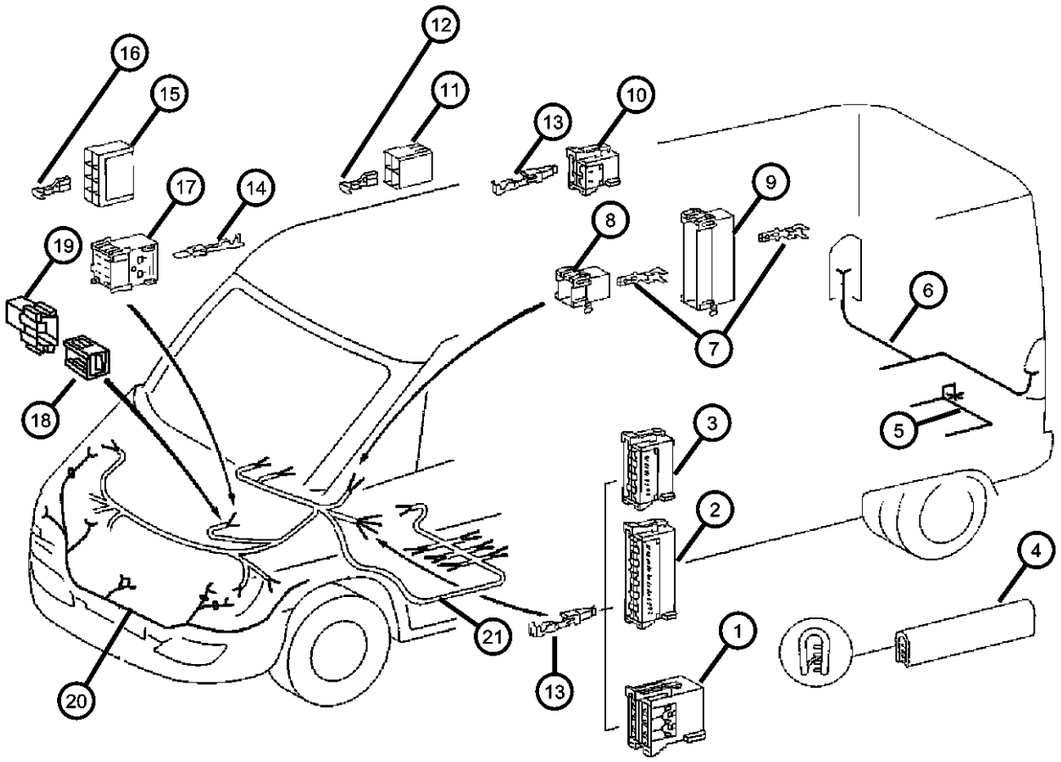

ITEM	PART NUMBER	QTY	LINE	SERIES	BODY	ENGINE	TRANS	TRIM	DESCRIPTION
	05133396AA	1	2, 6	L	11, 12, 14, 15, 16				
		1	2, 6	L	51, 52, 54, 55, 56				
		1	3, 7	L	12, 15, 16				
19									INSULATOR, 4 Way Male
	05133397AA	1	2, 6	L	11, 12, 14, 15, 16				
		1	2, 6	L	51, 52, 54, 55, 56				
		1	3, 7	L	12, 15, 16				
20									WIRING, Headlamp
	05133398AA	1	2, 6	L	11, 12, 14, 15, 16				
		1	2, 6	L	51, 52, 54, 55, 56				
		1	3, 7	L	12, 15, 16				
21									WIRING, Headlamp to Dash
	05114935AA	1	2, 6	L	11, 12, 14, 15, 16				
		1	2, 6	L	51, 52, 54, 55, 56				
		1	3, 7	L	12, 15, 16				

SPRINTER (VA)

SERIES	LINE	BODY	ENGINE	TRANSMISSION
L = LOWLINE	3 = HD DODGE 2WD 6 = Lt. Duty DODGE 4WD 2 = Med. Duty DODGE 2WD 7 = Med. Duty DODGE 4WD	55 = Wagon 140" 54 = Wagon 118" 52 = Wagon 140" 51 = Wagon 118" 12 = Van 140" 11 = Van 118" 06 = Front Section 158" 14 = Van 118" 15 = Van 140" 16 = Van 158" 56 = Wagon 158" 01 = Chassis Forward Control 118" 02 = Chassis Forward Control 140"	EX8 = Engine-2.7L I5 Mercedes Turbo Diesel	DGJ = Transmission-5-Spd. Automatic,W5A580

AR = use ase required - = Non illustrrated part

Connectors Roof
Figure 8-1615

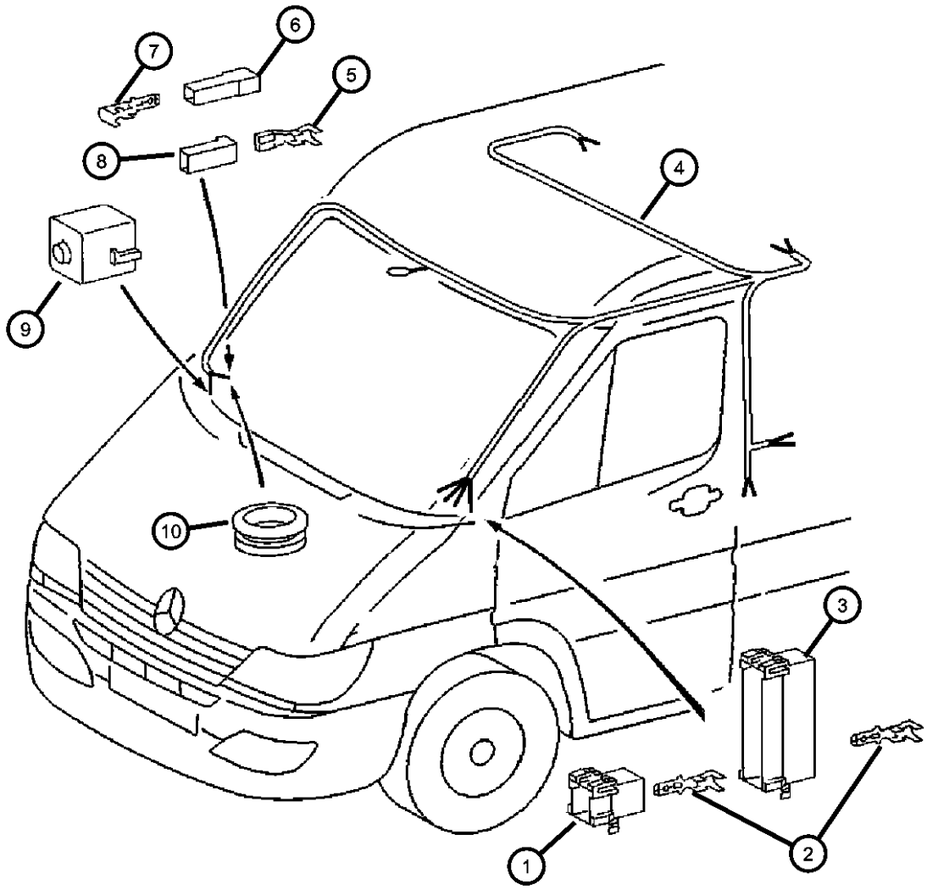

ITEM	PART NUMBER	QTY	LINE	SERIES	BODY	ENGINE	TRANS	TRIM	DESCRIPTION
1									CONNECTOR
	05120791AA	1	2, 6	L	11, 12, 14, 15, 16				
		1	2, 6	L	51, 52, 54, 55, 56				
		1	3, 7	L	12, 15, 16				
2									TERMINAL, Male
	05133377AA	1	2, 6	L	11, 12, 14, 15, 16				Small
		1	2, 6	L	51, 52, 54, 55, 56				Small
		1	3, 7	L	12, 15, 16				Small
	05133378AA	1	2, 6	L	11, 12, 14, 15, 16				Large
		1	2, 6	L	51, 52, 54, 55, 56				Large
		1	3, 7	L	12, 15, 16				Large
3									CONNECTOR
	05120794AA	1	2, 6	L	11, 12, 14, 15, 16				
		1	2, 6	L	51, 52, 54, 55, 56				
		1	3, 7	L	12, 15, 16				
4									WIRING, Body
	05114931AA	1	2, 6	L	11, 12, 14, 15, 16				
		1	2, 6	L	51, 52, 54, 55, 56				
		1	3, 7	L	12, 15, 16				
5									TERMINAL, Female
	05103871AA	1	2, 6	L	11, 12, 14, 15, 16				
		1	2, 6	L	51, 52, 54, 55, 56				
		1	3, 7	L	12, 15, 16				

SPRINTER (VA)

SERIES	LINE	BODY	ENGINE	TRANSMISSION
L = LOWLINE	3 = HD DODGE 2WD 6 = Lt. Duty DODGE 4WD 2 = Med. Duty DODGE 2WD 7 = Med. Duty DODGE 4WD	55 = Wagon 140" 54 = Wagon 118" 52 = Wagon 140" 51 = Wagon 118" 12 = Van 140" 11 = Van 118" 06 = Front Section 158" 14 = Van 118" 15 = Van 140" 16 = Van 158" 56 = Wagon 158" 01 = Chassis Forward Control 118" 02 = Chassis Forward Control 140"	EX8 = Engine-2.7L I5 Mercedes Turbo Diesel	DGJ = Transmission-5-Spd. Automatic,W5A580

Connectors Roof
Figure 8-1615

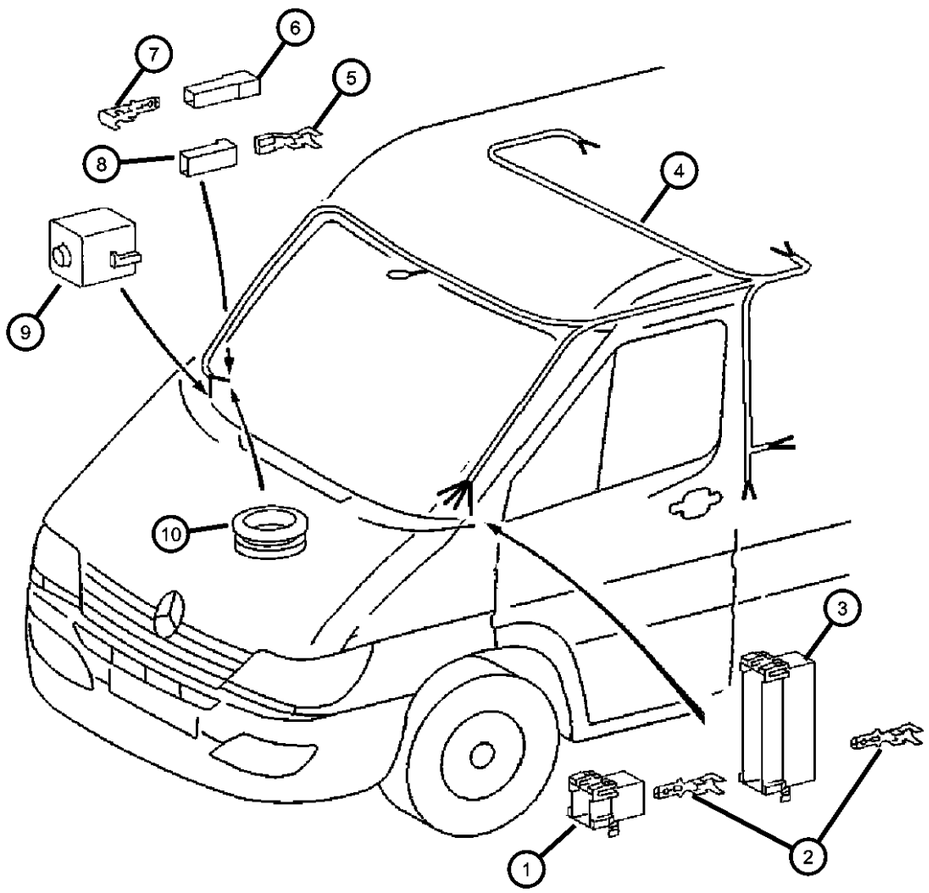

ITEM	PART NUMBER	QTY	LINE	SERIES	BODY	ENGINE	TRANS	TRIM	DESCRIPTION
6									INSULATOR
	05120685AA	1	2, 6	L	11, 12, 14, 15, 16				
		1	2, 6	L	51, 52, 54, 55, 56				
		1	3, 7	L	12, 15, 16				
7									TERMINAL, Male
	05133358AA	1	2, 6	L	11, 12, 14, 15, 16				
		1	2, 6	L	51, 52, 54, 55, 56				
		1	3, 7	L	12, 15, 16				
8									CONNECTOR
	05120684AA	1	2, 6	L	11, 12, 14, 15, 16				
		1	2, 6	L	51, 52, 54, 55, 56				
		1	3, 7	L	12, 15, 16				
9									INSULATOR, 2 Way
	05133401AA	1	2, 6	L	11, 12, 14, 15, 16				
		1	2, 6	L	51, 52, 54, 55, 56				
		1	3, 7	L	12, 15, 16				
10									GROMMET, Chassis Wiring
	05133408AA	1	2, 6	L	11, 12, 14, 15, 16				
		1	2, 6	L	51, 52, 54, 55, 56				
		1	3, 7	L	12, 15, 16				

SPRINTER (VA)

SERIES	LINE	BODY	ENGINE	TRANSMISSION
L = LOWLINE	3 = HD DODGE 2WD 6 = Lt. Duty DODGE 4WD 2 = Med. Duty DODGE 2WD 7 = Med. Duty DODGE 4WD	55 = Wagon 140" 54 = Wagon 118" 52 = Wagon 140" 51 = Wagon 118" 12 = Van 140" 11 = Van 118" 06 = Front Section 158" 14 = Van 118" 15 = Van 140" 16 = Van 158" 56 = Wagon 158" 01 = Chassis Forward Control 118" 02 = Chassis Forward Control 140"	EX8 = Engine-2.7L I5 Mercedes Turbo Diesel	DGJ = Transmission-5-Spd. Automatic,W5A580

Connectors Front Doors
Figure 8-1620

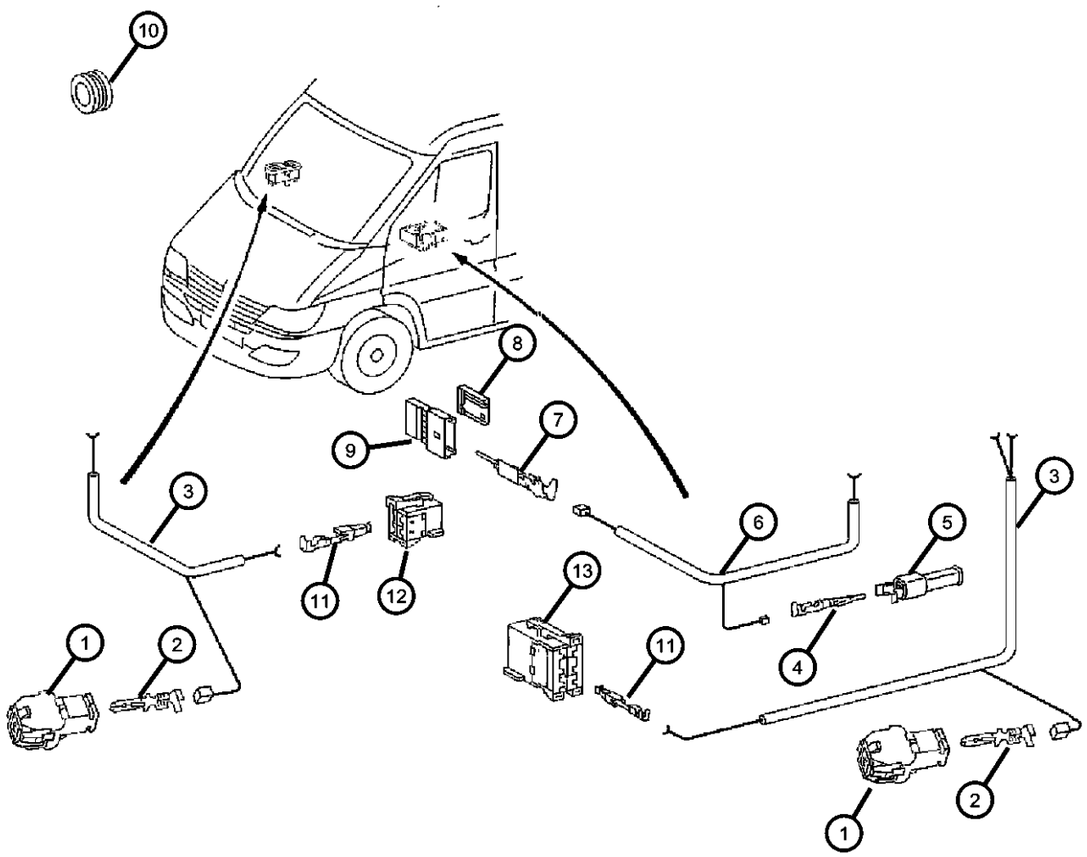

ITEM	PART NUMBER	QTY	LINE	SERIES	BODY	ENGINE	TRANS	TRIM	DESCRIPTION
1									CONNECTOR
	05120795AA	1	2, 6	L	11, 12, 14, 15, 16				
		1	2, 6	L	51, 52, 54, 55, 56				
		1	3, 7	L	12, 15, 16				
2									TERMINAL, Male
	05133378AA	1	2, 6	L	11, 12, 14, 15, 16				
		1	2, 6	L	51, 52, 54, 55, 56				
		1	3, 7	L	12, 15, 16				
3									WIRING, Power Window
	05120220AA	1	2, 6	L	11, 12, 14, 15, 16				Driver Side
		1	2, 6	L	51, 52, 54, 55, 56				Driver Side
		1	3, 7	L	12, 15, 16				Driver Side
	05120222AA	1	2, 6	L	11, 12, 14, 15, 16				Passenger Side
		1	2, 6	L	51, 52, 54, 55, 56				Passenger Side
		1	3, 7	L	12, 15, 16				Passenger Side
4									TERMINAL
	05133387AA	1	2, 6	L	11, 12, 14, 15, 16				
		1	2, 6	L	51, 52, 54, 55, 56				
		1	3, 7	L	12, 15, 16				
5									CONNECTOR
	05120744AA	1	2, 6	L	11, 12, 14, 15, 16				
		1	2, 6	L	51, 52, 54, 55, 56				
		1	3, 7	L	12, 15, 16				

SPRINTER (VA)

SERIES	LINE	BODY	ENGINE	TRANSMISSION
L = LOWLINE	3 = HD DODGE 2WD 6 = Lt. Duty DODGE 4WD 2 = Med. Duty DODGE 2WD 7 = Med. Duty DODGE 4WD	55 = Wagon 140" 54 = Wagon 118" 52 = Wagon 140" 51 = Wagon 118" 12 = Van 140" 11 = Van 118" 06 = Front Section 158" 14 = Van 118" 15 = Van 140" 16 = Van 158" 56 = Wagon 158" 01 = Chassis Forward Control 118" 02 = Chassis Forward Control 140"	EX8 = Engine-2.7L I5 Mercedes Turbo Diesel	DGJ = Transmission-5-Spd. Automatic,W5A580

Connectors Front Doors
Figure 8-1620

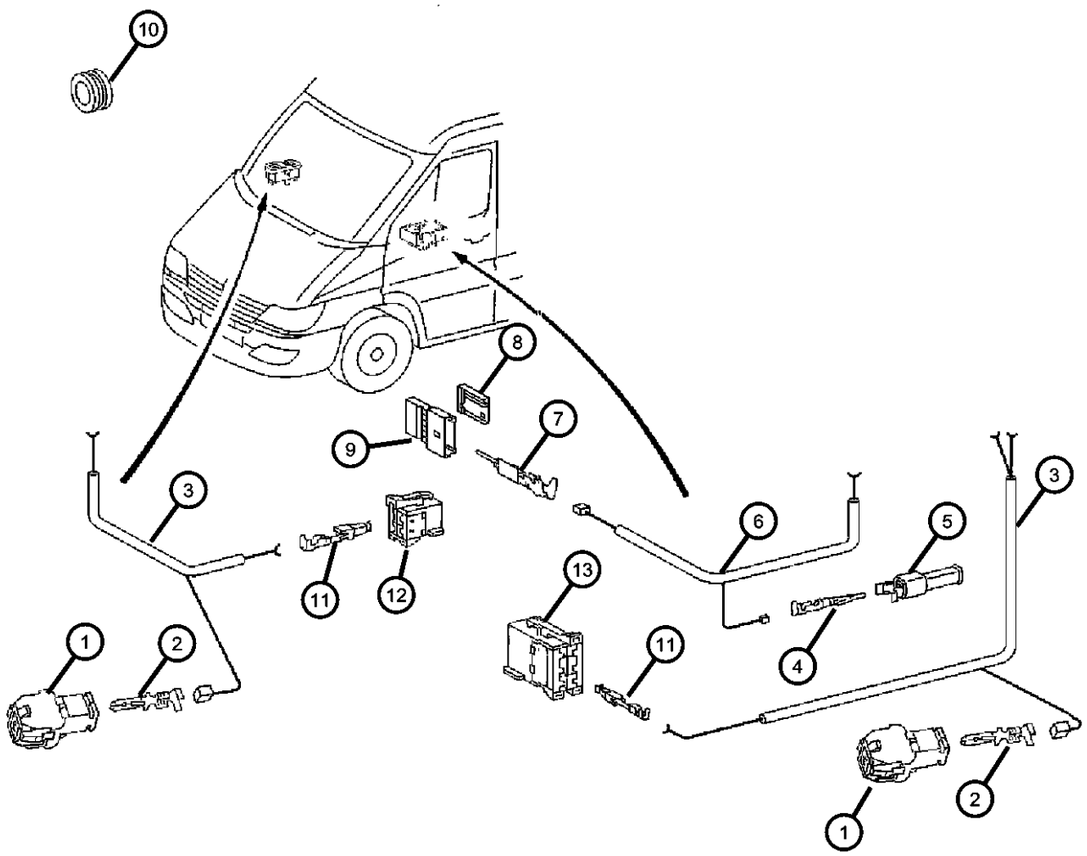

ITEM	PART NUMBER	QTY	LINE	SERIES	BODY	ENGINE	TRANS	TRIM	DESCRIPTION
6									WIRING, Mirror Jumper
	05120224AA	1	2, 6	L	11, 12, 14, 15, 16				
		1	2, 6	L	51, 52, 54, 55, 56				
		1	3, 7	L	12, 15, 16				
7									TERMINAL, Male
	05133990AA	99	2, 6	L	11, 12, 14, 15, 16				
		99	2, 6	L	51, 52, 54, 55, 56				
		99	3, 7	L	12, 15, 16				
8									CONNECTOR, Instrument cluster
	05133331AA	1	2, 6	L	11, 12, 14, 15, 16				
		1	2, 6	L	51, 52, 54, 55, 56				
		1	3, 7	L	12, 15, 16				
9									INSULATOR, 6 Way
	05133330AA	1	2, 6	L	11, 12, 14, 15, 16				
		1	2, 6	L	51, 52, 54, 55, 56				
		1	3, 7	L	12, 15, 16				
10									GROMMET
	05125942AA	1	2, 6	L	11, 12, 14, 15, 16				
		1	2, 6	L	51, 52, 54, 55, 56				
		1	3, 7	L	12, 15, 16				
11									TERMINAL
	05103881AA	1	2, 6	L	11, 12, 14, 15, 16				
		1	2, 6	L	51, 52, 54, 55, 56				

SPRINTER (VA)

SERIES	LINE	BODY	ENGINE	TRANSMISSION
L = LOWLINE	3 = HD DODGE 2WD 6 = Lt. Duty DODGE 4WD 2 = Med. Duty DODGE 2WD 7 = Med. Duty DODGE 4WD	55 = Wagon 140" 54 = Wagon 118" 52 = Wagon 140" 51 = Wagon 118" 12 = Van 140" 11 = Van 118" 06 = Front Section 158" 14 = Van 118" 15 = Van 140" 16 = Van 158" 56 = Wagon 158" 01 = Chassis Forward Control 118" 02 = Chassis Forward Control 140"	EX8 = Engine-2.7L I5 Mercedes Turbo Diesel	DGJ = Transmission-5-Spd. Automatic,W5A580

Connectors Front Doors
Figure 8-1620

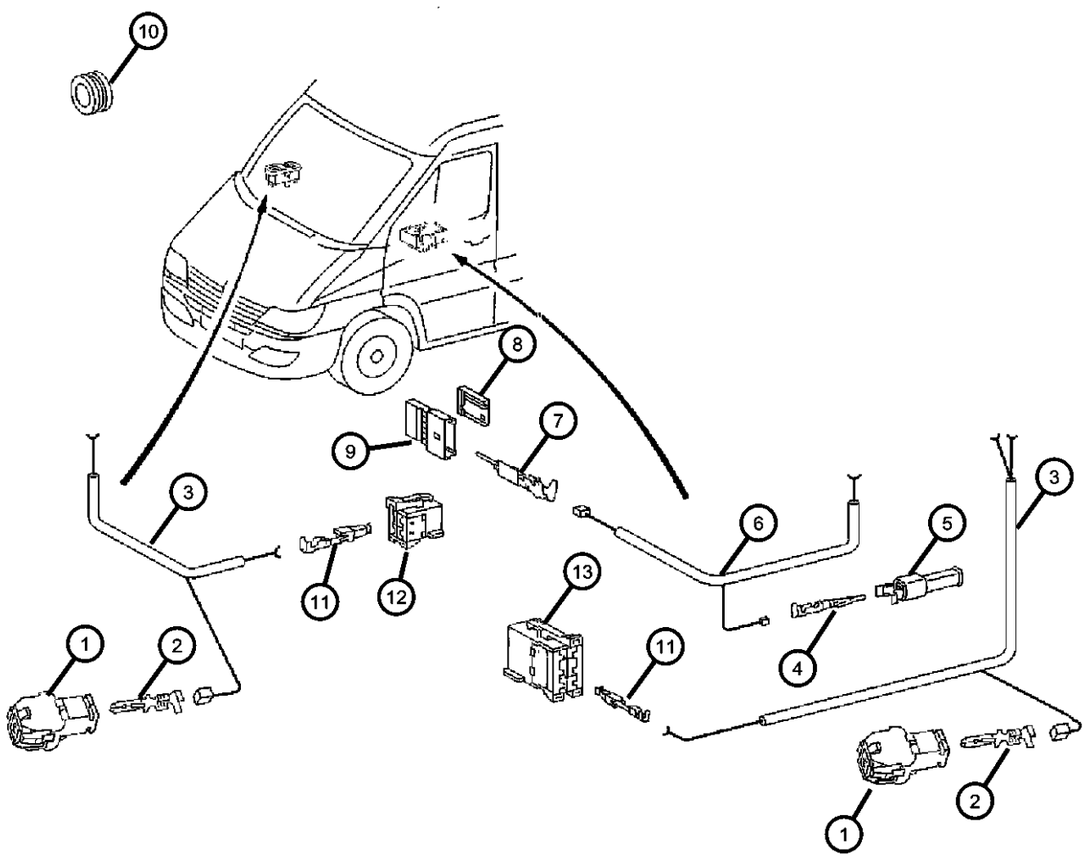

ITEM	PART NUMBER	QTY	LINE	SERIES	BODY	ENGINE	TRANS	TRIM	DESCRIPTION
		1	3, 7	L	12, 15, 16				
12									CONNECTOR
	05120785AA	1	2, 6	L	11, 12, 14, 15, 16				
		1	2, 6	L	51, 52, 54, 55, 56				
		1	3, 7	L	12, 15, 16				
13									CONNECTOR
	05120786AA	1	2, 6	L	11, 12, 14, 15, 16				
		1	2, 6	L	51, 52, 54, 55, 56				
		1	3, 7	L	12, 15, 16				

SPRINTER (VA)

SERIES	LINE	BODY	ENGINE	TRANSMISSION
L = LOWLINE	3 = HD DODGE 2WD 6 = Lt. Duty DODGE 4WD 2 = Med. Duty DODGE 2WD 7 = Med. Duty DODGE 4WD	55 = Wagon 140" 54 = Wagon 118" 52 = Wagon 140" 51 = Wagon 118" 12 = Van 140" 11 = Van 118" 06 = Front Section 158" 14 = Van 118" 15 = Van 140" 16 = Van 158" 56 = Wagon 158" 01 = Chassis Forward Control 118" 02 = Chassis Forward Control 140"	EX8 = Engine-2.7L I5 Mercedes Turbo Diesel	DGJ = Transmission-5-Spd. Automatic,W5A580

Connectors Rear Doors
Figure 8-1625

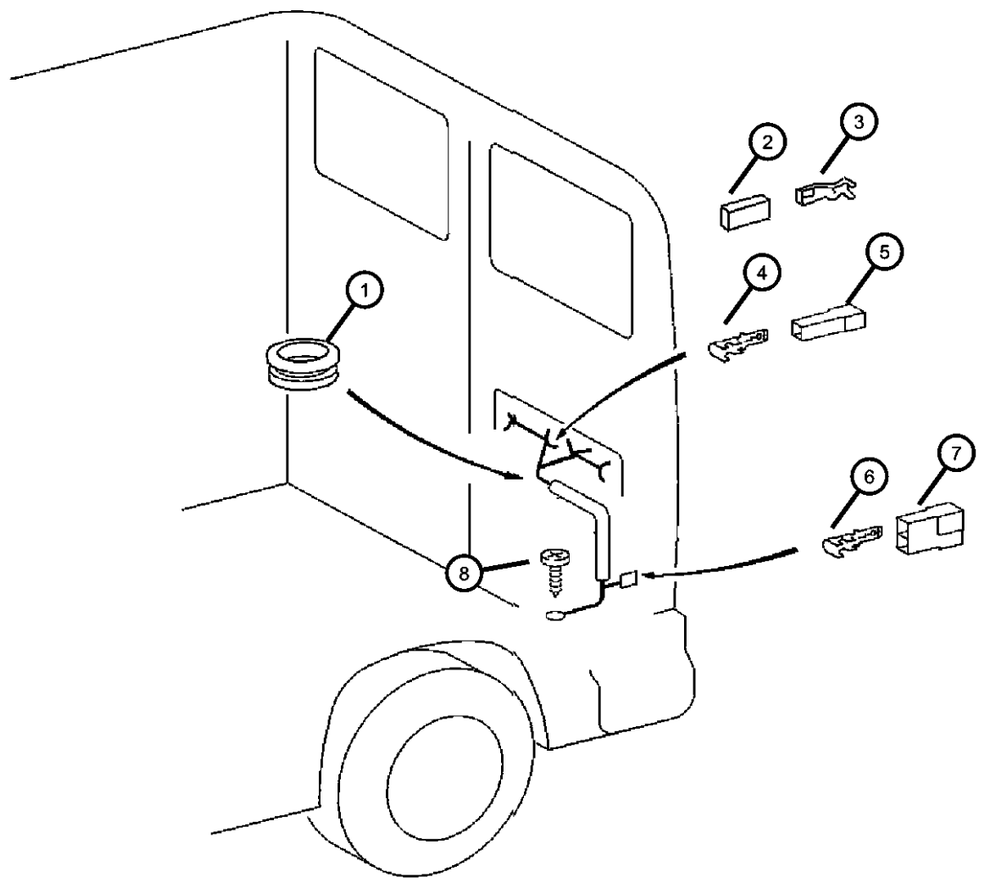

ITEM	PART NUMBER	QTY	LINE	SERIES	BODY	ENGINE	TRANS	TRIM	DESCRIPTION
1									GROMMET
	05125931AA	1	2, 6	L	11, 12, 14, 15, 16				
		1	2, 6	L	51, 52, 54, 55, 56				
		2	3, 7	L	12, 15, 16				
2									CONNECTOR
	05120684AA	1	2, 6	L	11, 12, 14, 15, 16				
		1	2, 6	L	51, 52, 54, 55, 56				
		1	3, 7	L	12, 15, 16				
3									TERMINAL, Female
	05114451AA	99	2, 6	L	11, 12, 14, 15, 16				
		99	2, 6	L	51, 52, 54, 55, 56				
		99	3, 7	L	12, 15, 16				
4									TERMINAL, Male
	05103798AA	1	2, 6	L	11, 12, 14, 15, 16				
		1	2, 6	L	51, 52, 54, 55, 56				
		1	3, 7	L	12, 15, 16				
5									INSULATOR
	05120685AA	2	2, 6	L	51, 52, 54, 55, 56				
		2	2, 6	L	11, 12, 14, 15, 16				
		2	3, 7	L	12, 15, 16				
6									CONNECTOR
	05103751AA	1	2, 6	L	11, 12, 14, 15, 16				
		1	2, 6	L	51, 52, 54, 55, 56				

SPRINTER (VA)

SERIES	LINE	BODY	ENGINE	TRANSMISSION
L = LOWLINE	3 = HD DODGE 2WD 6 = Lt. Duty DODGE 4WD 2 = Med. Duty DODGE 2WD 7 = Med. Duty DODGE 4WD	55 = Wagon 140" 54 = Wagon 118" 52 = Wagon 140" 51 = Wagon 118" 12 = Van 140" 11 = Van 118" 06 = Front Section 158" 14 = Van 118" 15 = Van 140" 16 = Van 158" 56 = Wagon 158" 01 = Chassis Forward Control 118" 02 = Chassis Forward Control 140"	EX8 = Engine-2.7L I5 Mercedes Turbo Diesel	DGJ = Transmission-5-Spd. Automatic,W5A580

Connectors Rear Doors
Figure 8-1625

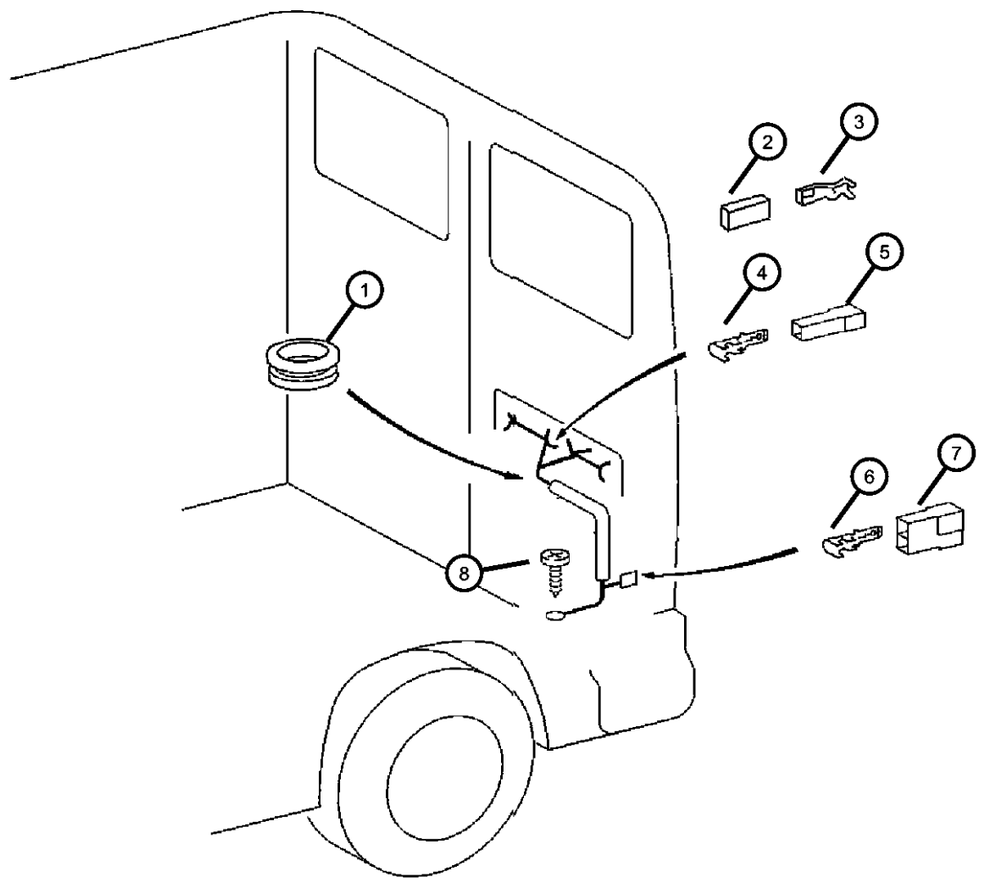

ITEM	PART NUMBER	QTY	LINE	SERIES	BODY	ENGINE	TRANS	TRIM	DESCRIPTION
		1	3, 7	L	12, 15, 16				
7									TERMINAL, Male
	05103798AA	1	2, 6	L	11, 12, 14, 15, 16				
		1	2, 6	L	51, 52, 54, 55, 56				
		1	3, 7	L	12, 15, 16				
8									SCREW, Tapping
	05132835AA	1	2, 6	L	11, 12, 14, 15, 16				
		1	2, 6	L	51, 52, 54, 55, 56				
		1	3, 7	L	12, 15, 16				

SPRINTER (VA)

SERIES	LINE	BODY	ENGINE	TRANSMISSION
L = LOWLINE	3 = HD DODGE 2WD 6 = Lt. Duty DODGE 4WD 2 = Med. Duty DODGE 2WD 7 = Med. Duty DODGE 4WD	55 = Wagon 140" 54 = Wagon 118" 52 = Wagon 140" 51 = Wagon 118" 12 = Van 140" 11 = Van 118" 06 = Front Section 158" 14 = Van 118" 15 = Van 140" 16 = Van 158" 56 = Wagon 158" 01 = Chassis Forward Control 118" 02 = Chassis Forward Control 140"	EX8 = Engine-2.7L I5 Mercedes Turbo Diesel	DGJ = Transmission-5-Spd. Automatic,W5A580

Connectors Seating Area
Figure 8-1630

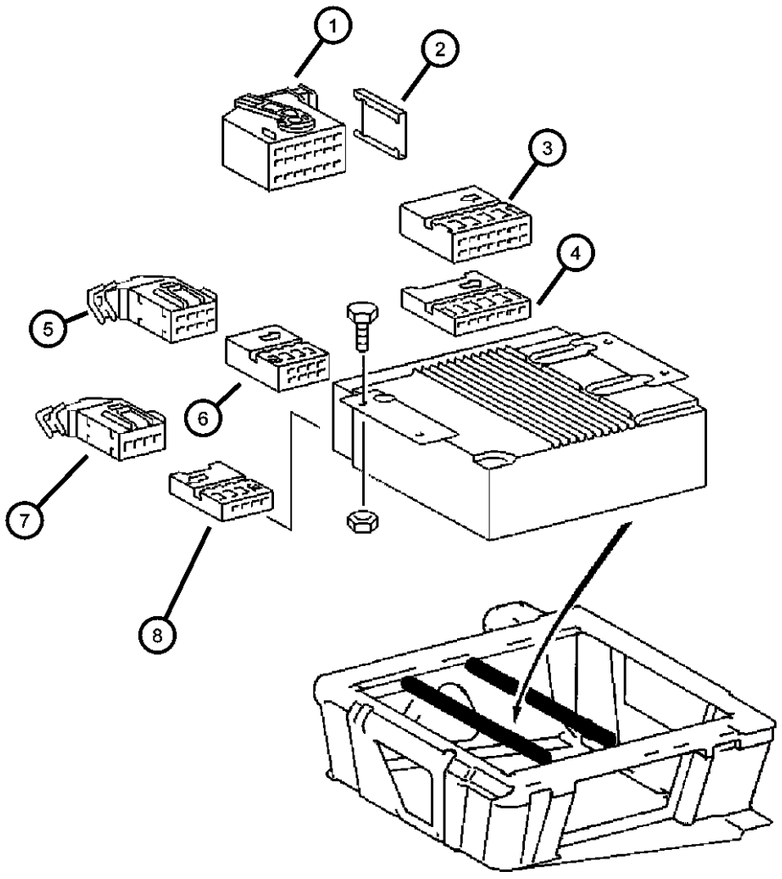

ITEM	PART NUMBER	QTY	LINE	SERIES	BODY	ENGINE	TRANS	TRIM	DESCRIPTION
1									INSULATOR
	05102941AA	1	2, 6	L	11, 12, 14, 15, 16				
		1	2, 6	L	51, 52, 54, 55, 56				
		1	3, 7	L	12, 15, 16				
2									CONNECTOR
	05102945AA	1	2, 6	L	11, 12, 14, 15, 16				
		1	2, 6	L	51, 52, 54, 55, 56				
		1	3, 7	L	12, 15, 16				
3									CONNECTOR
	05102943AA	1	2, 6	L	11, 12, 14, 15, 16				
		1	2, 6	L	51, 52, 54, 55, 56				
		1	3, 7	L	12, 15, 16				
4									CONNECTOR, 7 Way
	05102944AA	1	2, 6	L	11, 12, 14, 15, 16				
		1	2, 6	L	51, 52, 54, 55, 56				
		1	3, 7	L	12, 15, 16				
5									INSULATOR, 8 Way
	05133339AA	1	2, 6	L	11, 12, 14, 15, 16				
		1	2, 6	L	51, 52, 54, 55, 56				
		1	3, 7	L	12, 15, 16				
6									INSULATOR, 8 Way
	05133340AA	1	2, 6	L	11, 12, 14, 15, 16				
		1	2, 6	L	51, 52, 54, 55, 56				

SPRINTER (VA)

SERIES	LINE	BODY	ENGINE	TRANSMISSION
L = LOWLINE	3 = HD DODGE 2WD 6 = Lt. Duty DODGE 4WD 2 = Med. Duty DODGE 2WD 7 = Med. Duty DODGE 4WD	55 = Wagon 140" 54 = Wagon 118" 52 = Wagon 140" 51 = Wagon 118" 12 = Van 140" 11 = Van 118" 06 = Front Section 158" 14 = Van 118" 15 = Van 140" 16 = Van 158" 56 = Wagon 158" 01 = Chassis Forward Control 118" 02 = Chassis Forward Control 140"	EX8 = Engine-2.7L I5 Mercedes Turbo Diesel	DGJ = Transmission-5-Spd. Automatic,W5A580

Connectors Seating Area
Figure 8-1630

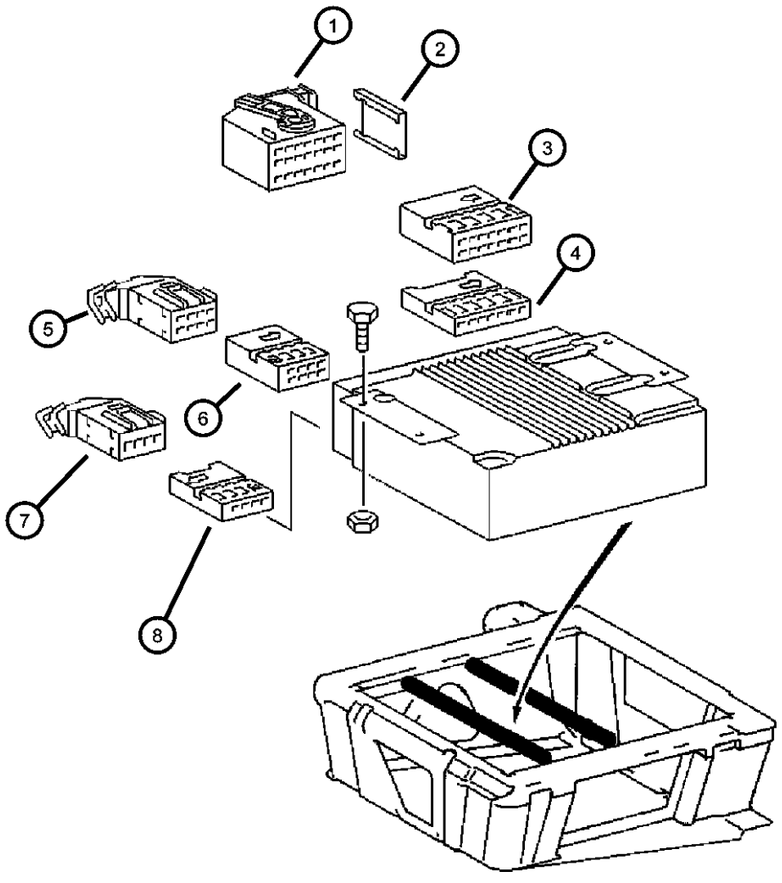

ITEM	PART NUMBER	QTY	LINE	SERIES	BODY	ENGINE	TRANS	TRIM	DESCRIPTION
		1	3, 7	L	12, 15, 16				
7									INSULATOR, 8 Way
	05133342AA	1	2, 6	L	11, 12, 14, 15, 16				
		1	2, 6	L	51, 52, 54, 55, 56				
		1	3, 7	L	12, 15, 16				
8									INSULATOR, 8 Way
	05133341AA	1	2, 6	L	11, 12, 14, 15, 16				
		1	2, 6	L	51, 52, 54, 55, 56				
		1	3, 7	L	12, 15, 16				

SPRINTER (VA)

SERIES	LINE	BODY	ENGINE	TRANSMISSION
L = LOWLINE	3 = HD DODGE 2WD 6 = Lt. Duty DODGE 4WD 2 = Med. Duty DODGE 2WD 7 = Med. Duty DODGE 4WD	55 = Wagon 140" 54 = Wagon 118" 52 = Wagon 140" 51 = Wagon 118" 12 = Van 140" 11 = Van 118" 06 = Front Section 158" 14 = Van 118" 15 = Van 140" 16 = Van 158" 56 = Wagon 158" 01 = Chassis Forward Control 118" 02 = Chassis Forward Control 140"	EX8 = Engine-2.7L I5 Mercedes Turbo Diesel	DGJ = Transmission-5-Spd. Automatic,W5A580

Air Bag System Drivers Side
Figure 8-1705

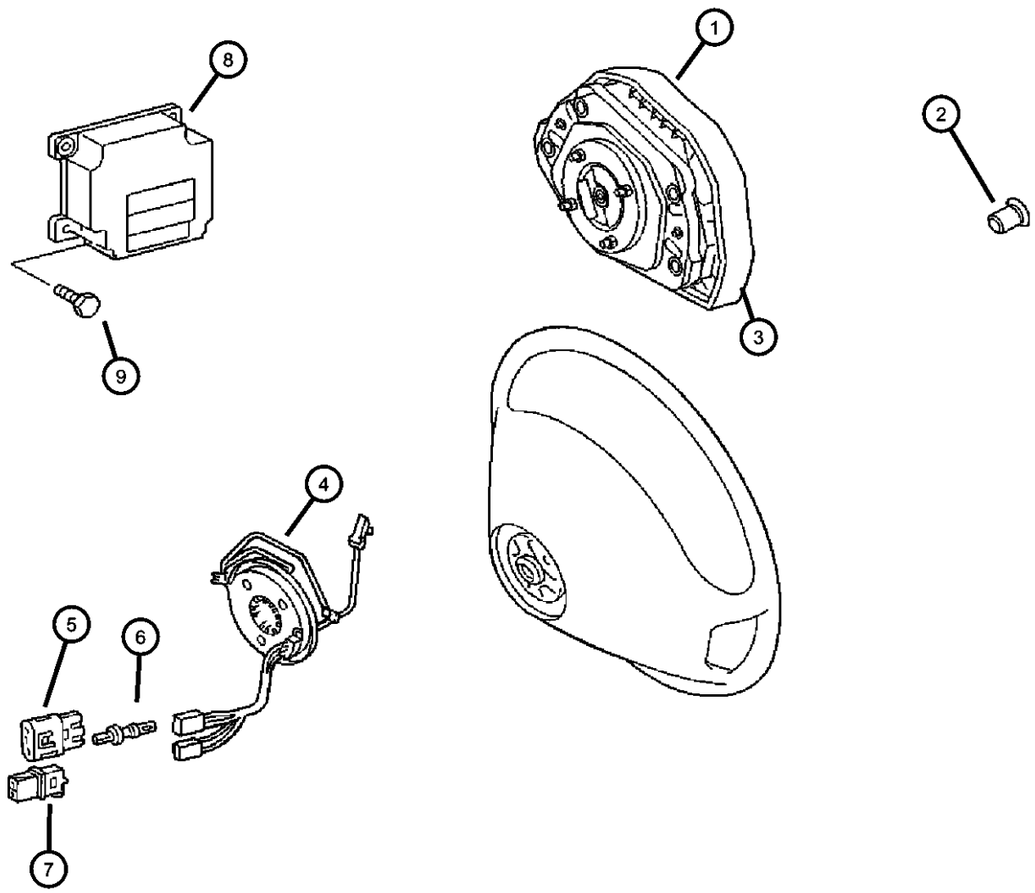

ITEM	PART NUMBER	QTY	LINE	SERIES	BODY	ENGINE	TRANS	TRIM	DESCRIPTION
1									AIR BAG, Driver
	05119529AA	1	2	L	51, 52, 54, 55, 56				Dodge emblem
		1	2	L	01, 02, 06				Dodge emblem
		1	2	L	11, 12, 14, 15, 16				Dodge emblem
		1	3	L	12, 15, 16				Dodge emblem
	1AR08CSSAA	1	6	L	11, 12, 14, 15, 16				Freightliner Emblem
		1	7	L	12, 15, 16				Freightliner Emblem
		1	6	L	01, 02, 06				Freightliner Emblem
		1	6	L	51, 52, 54, 55, 56				Freightliner Emblem
2									SCREW
	05103604AA	1	2, 6	L	01, 02, 06				
		1	2, 6	L	15, 16, 11, 12, 14				
		1	2, 6	L	51, 52, 54, 55, 56				
		1	3, 7	L	12, 15, 16				
3									COVER, Steering Wheel
	0ZF47CSSAA	1	3, 7	L	02, 06				
		1	2, 6	L	11, 12, 14, 15, 16				
		1	2, 6	L	51, 52, 54, 55, 56				
		1	3, 7	L	12, 15, 16				
		1	2, 6	L	01, 02, 06				
4									CLOCKSPRING
	05104089AA	1	2, 6	L	01, 02, 06				
		1	2, 6	L	11, 12, 14, 15, 16				
		1	2, 6	L	51, 52, 54, 55, 56				

SPRINTER (VA)

SERIES	LINE	BODY	ENGINE	TRANSMISSION
L = LOWLINE	3 = HD DODGE 2WD 6 = Lt. Duty DODGE 4WD 2 = Med. Duty DODGE 2WD 7 = Med. Duty DODGE 4WD	55 = Wagon 140" 54 = Wagon 118" 52 = Wagon 140" 51 = Wagon 118" 12 = Van 140" 11 = Van 118" 06 = Front Section 158" 14 = Van 118" 15 = Van 140" 16 = Van 158" 56 = Wagon 158" 01 = Chassis Forward Control 118" 02 = Chassis Forward Control 140"	EX8 = Engine-2.7L I5 Mercedes Turbo Diesel	DGJ = Transmission-5-Spd. Automatic,W5A580

Air Bag System Drivers Side
Figure 8-1705

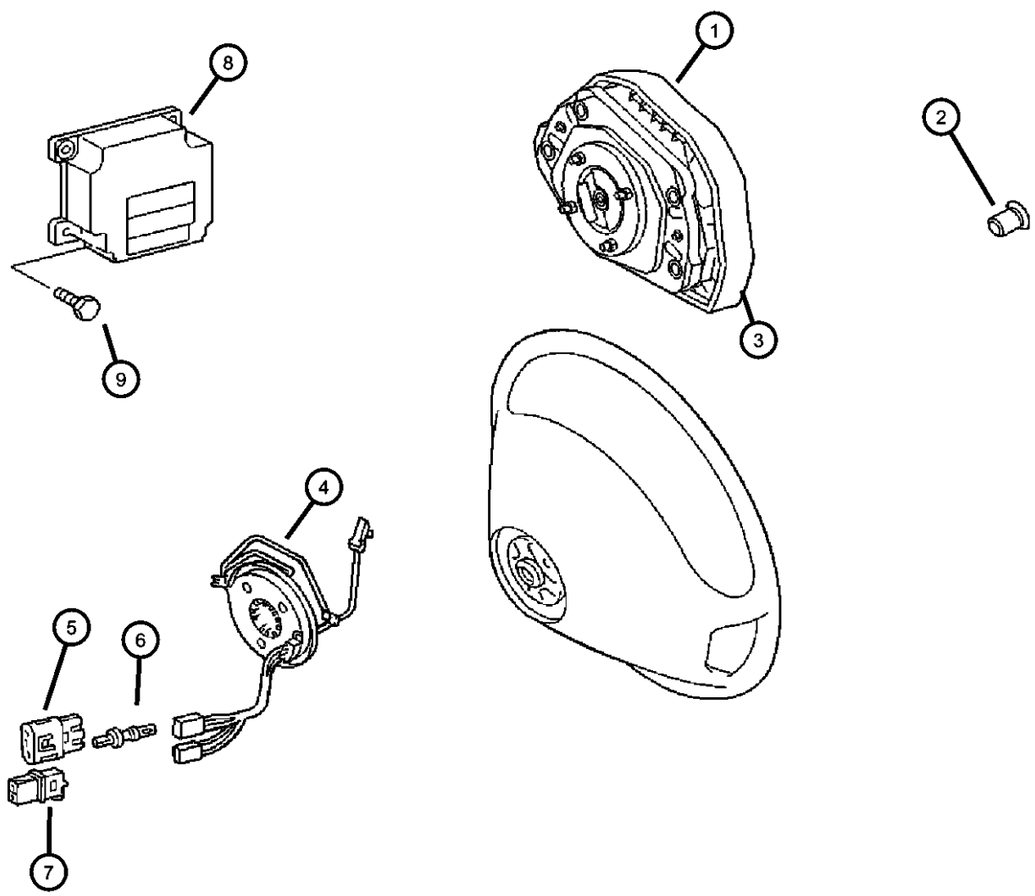

ITEM	PART NUMBER	QTY	LINE	SERIES	BODY	ENGINE	TRANS	TRIM	DESCRIPTION
		1	3, 7	L	12, 15, 16				
5									CONNECTOR
	05103904AA	1	2, 6	L	01, 02, 06				
		1	2, 6	L	11, 12, 14, 15, 16				
		1	2, 6	L	56, 51, 52, 54, 55				
		1	7, 3	L	12, 15, 16				
6									TERMINAL
	05103828AA	1	2, 6	L	01, 02, 06				
		1	2, 6	L	11, 12, 14, 15, 16				
		1	2, 6	L	51, 52, 54, 55, 56				
		1	3, 7	L	12, 15, 16				
7									CONNECTOR
	05103902AA	1	2, 6	L	01, 02, 06				
		1	2, 6	L	11, 12, 14, 15, 16				
		1	2, 6	L	51, 52, 54, 55, 56				
		1	3, 7	L	12, 15, 16				
8									MODULE, Air Bag Control
	05119435AA	1	2, 6	L	01, 02, 06				
		1	2, 6	L	11, 12, 14, 15, 16				
		1	2, 6	L	51, 52, 54, 55, 56				
		1	3, 7	L	12, 15, 16				
9									SCREW
	06104005AA	2	2, 6	L	01, 02, 06				
		2	2, 6	L	12, 14, 15, 16, 11				

SPRINTER (VA)

SERIES	LINE	BODY	ENGINE	TRANSMISSION
L = LOWLINE	3 = HD DODGE 2WD 6 = Lt. Duty DODGE 4WD 2 = Med. Duty DODGE 2WD 7 = Med. Duty DODGE 4WD	55 = Wagon 140" 54 = Wagon 118" 52 = Wagon 140" 51 = Wagon 118" 12 = Van 140" 11 = Van 118" 06 = Front Section 158" 14 = Van 118" 15 = Van 140" 16 = Van 158" 56 = Wagon 158" 01 = Chassis Forward Control 118" 02 = Chassis Forward Control 140"	EX8 = Engine-2.7L I5 Mercedes Turbo Diesel	DGJ = Transmission-5-Spd. Automatic,W5A580

Air Bag System Drivers Side
Figure 8-1705

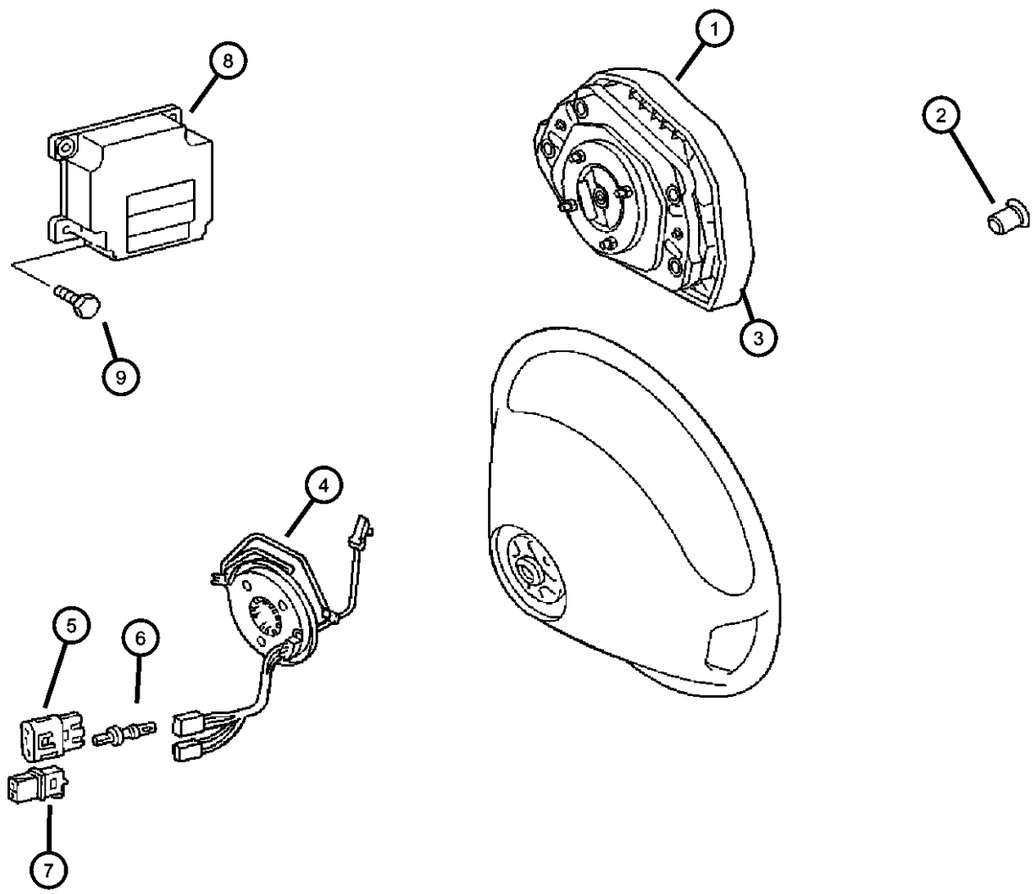

ITEM	PART NUMBER	QTY	LINE	SERIES	BODY	ENGINE	TRANS	TRIM	DESCRIPTION
		2	2, 6	L	51, 52, 54, 55, 56				
		2	3, 7	L	12, 15, 16				

SPRINTER (VA)

SERIES	LINE	BODY	ENGINE	TRANSMISSION
L = LOWLINE	3 = HD DODGE 2WD 6 = Lt. Duty DODGE 4WD 2 = Med. Duty DODGE 2WD 7 = Med. Duty DODGE 4WD	55 = Wagon 140" 54 = Wagon 118" 52 = Wagon 140" 51 = Wagon 118" 12 = Van 140" 11 = Van 118" 06 = Front Section 158" 14 = Van 118" 15 = Van 140" 16 = Van 158" 56 = Wagon 158" 01 = Chassis Forward Control 118" 02 = Chassis Forward Control 140"	EX8 = Engine-2.7L I5 Mercedes Turbo Diesel	DGJ = Transmission-5-Spd. Automatic,W5A580

AR = use ase required - = Non illustrrated part

Air Bag System Passenger Side
Figure 8-1710

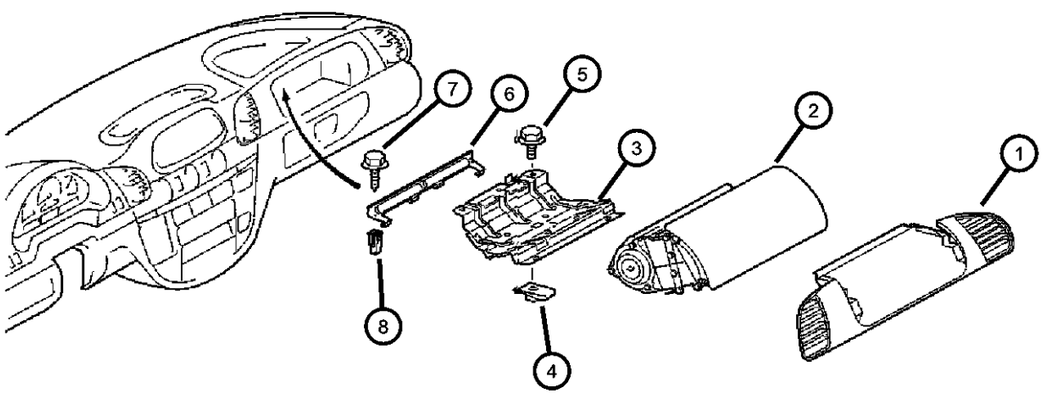

ITEM	PART NUMBER	QTY	LINE	SERIES	BODY	ENGINE	TRANS	TRIM	DESCRIPTION
1									DOOR, Passenger Air Bag
	05104261AA	1	2, 6	L	01, 02, 06				
		1	2, 6	L	11, 12, 14, 15, 16				
		1	2, 6	L	51, 52, 54, 55, 56				
		1	3, 7	L	12, 15, 16				
2									AIR BAG, Passenger
	05124934AA	1	2, 6	L	01, 02, 06				
		1	2, 6	L	11, 12, 14, 15, 16				
		1	2, 6	L	51, 52, 54, 55, 56				
		1	3, 7	L	12, 15, 16				
3									BRACKET, Air Bag
	05122938AA	1	2, 6	L	01, 02, 06				
		1	2, 6	L	11, 12, 14, 15, 16				
		1	2, 6	L	51, 52, 54, 55, 56				
		1	3, 7	L	12, 15, 16				
4									NUT, Clip-On
	05133420AA	2	2, 6	L	11, 12, 14, 15, 16				
		2	2, 6	L	51, 52, 54, 55, 56				
		1	3, 7	L	12, 15, 16				
5									SCREW
	06104565AA	2	2, 6	L	01, 02, 06				
		2	2, 6	L	11, 12, 14, 15, 16				
		2	2, 6	L	51, 52, 54, 55, 56				
		2	3, 7	L	12, 15, 16				

SPRINTER (VA)

SERIES	LINE	BODY	ENGINE	TRANSMISSION
L = LOWLINE	3 = HD DODGE 2WD 6 = Lt. Duty DODGE 4WD 2 = Med. Duty DODGE 2WD 7 = Med. Duty DODGE 4WD	55 = Wagon 140" 54 = Wagon 118" 52 = Wagon 140" 51 = Wagon 118" 12 = Van 140" 11 = Van 118" 06 = Front Section 158" 14 = Van 118" 15 = Van 140" 16 = Van 158" 56 = Wagon 158" 01 = Chassis Forward Control 118" 02 = Chassis Forward Control 140"	EX8 = Engine-2.7L I5 Mercedes Turbo Diesel	DGJ = Transmission-5-Spd. Automatic,W5A580

Air Bag System Passenger Side
Figure 8-1710

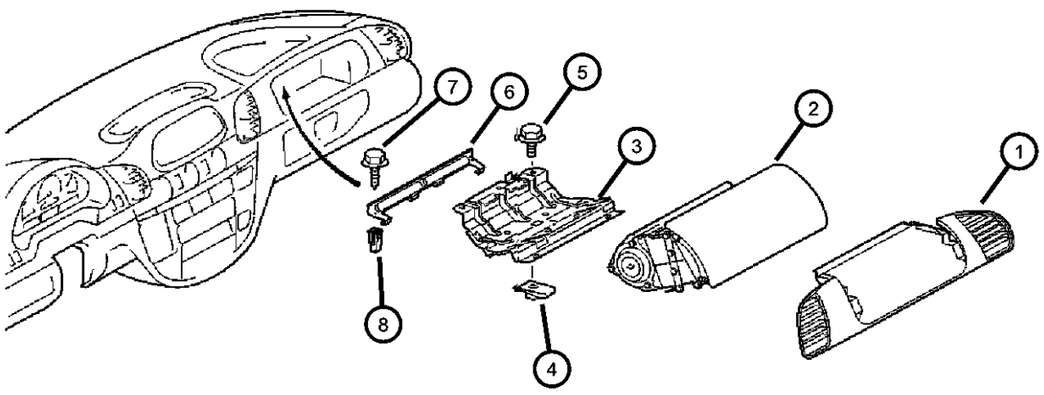

ITEM	PART NUMBER	QTY	LINE	SERIES	BODY	ENGINE	TRANS	TRIM	DESCRIPTION
6									BRACKET, Instrument Panel
	05122388AA	1	2, 6	L	01, 02, 06				
		1	2, 6	L	11, 12, 14, 15, 16				
		1	2, 6	L	51, 52, 54, 55, 56				
		1	3, 7	L	12, 15, 16				
7		1							SCREW, (NOT SERVICED)
8									NUT, Plastic Snap-in
	05125576AA	2	2, 6	L	11, 12, 14, 15, 16		DGJ		
		2	3, 7	L	12, 15, 16		DGJ		
		2	2, 6	L	01, 02, 06				
		3	2, 6	L	11, 12, 14, 15, 16				

SPRINTER (VA)

SERIES	LINE	BODY	ENGINE	TRANSMISSION
L = LOWLINE	3 = HD DODGE 2WD 6 = Lt. Duty DODGE 4WD 2 = Med. Duty DODGE 2WD 7 = Med. Duty DODGE 4WD	55 = Wagon 140" 54 = Wagon 118" 52 = Wagon 140" 51 = Wagon 118" 12 = Van 140" 11 = Van 118" 06 = Front Section 158" 14 = Van 118" 15 = Van 140" 16 = Van 158" 56 = Wagon 158" 01 = Chassis Forward Control 118" 02 = Chassis Forward Control 140"	EX8 = Engine-2.7L I5 Mercedes Turbo Diesel	DGJ = Transmission-5-Spd. Automatic,W5A580

AR = use ase required - = Non illustrrated part

Glow Plugs
Figure 8-1910

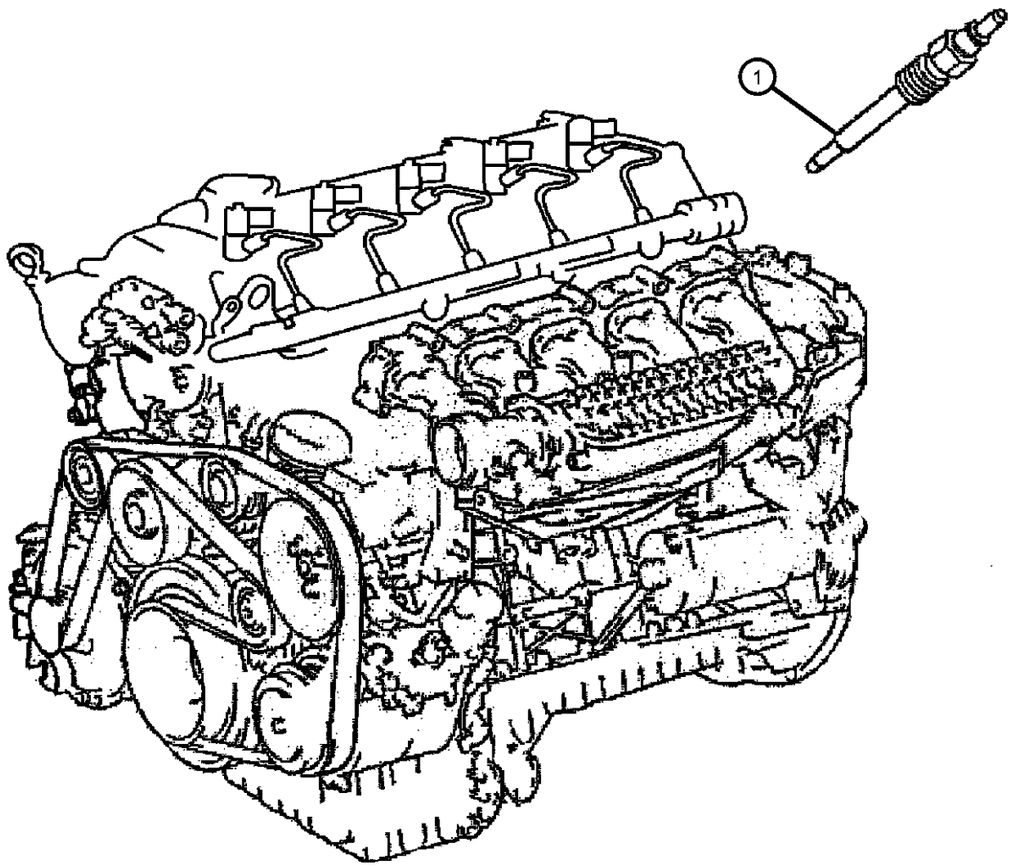

ITEM	PART NUMBER	QTY	LINE	SERIES	BODY	ENGINE	TRANS	TRIM	DESCRIPTION
1									PLUG, Glow
	05117592AA	5		L		EX9			
		5		L		EX8			
-2									RELAY, Electrical
	05103568AA	1	2, 6	L	01, 02, 06	EX8, EX9			Glow plug
		1	2, 6	L	11, 12, 14, 15, 16	EX8, EX9			Glow plug
		1	2, 6	L	51, 52, 54, 55, 56	EX8, EX9			Glow plug
		1	3, 7	L	02, 06	EX8, EX9			Glow plug
		1	3, 7	L	12, 15, 16	EX8, EX9			Glow plug

SPRINTER (VA)

SERIES	LINE	BODY	ENGINE	TRANSMISSION
L = LOWLINE	3 = HD DODGE 2WD 6 = Lt. Duty DODGE 4WD 2 = Med. Duty DODGE 2WD 7 = Med. Duty DODGE 4WD	55 = Wagon 140" 54 = Wagon 118" 52 = Wagon 140" 51 = Wagon 118" 12 = Van 140" 11 = Van 118" 06 = Front Section 158" 14 = Van 118" 15 = Van 140" 16 = Van 158" 56 = Wagon 158" 01 = Chassis Forward Control 118" 02 = Chassis Forward Control 140"	EX8 = Engine-2.7L I5 Mercedes Turbo Diesel	DGJ = Transmission-5-Spd. Automatic,W5A580

Group - 08A

Instrument Panel and Radios and Consoles

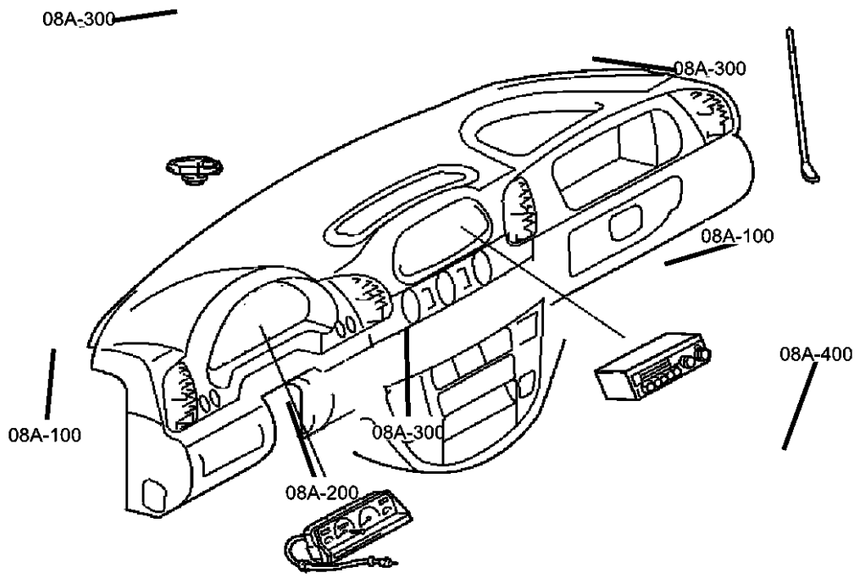

08A-100 Instrument Panel	08A-200 Instrument Panel Cluster	08A-300 Radio, Antenna, and Speakers	08A-400 Consoles
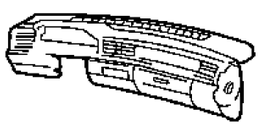	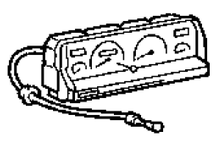	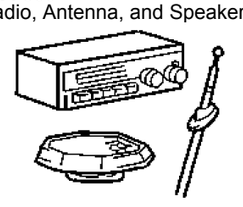	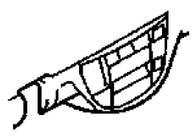

Group - 08A Instrument Panel and Radios and Consoles

Illustration Title — Group-Fig. No.

Instrument Panel
Instrument Panel ..... Fig. 08A - 105
Instrument Panel Bezel and Related Parts ..... Fig. 08A - 110
Ash Reciever and Glove Box ..... Fig. 08A - 115
Instrument Panel Cover and Related Parts ..... Fig. 08A - 120
Instrument Panel Reinforcement ..... Fig. 08A - 125

Instrument Panel Cluster
Instrument Panel Cluster ..... Fig. 08A - 205

Radio, Antenna, and Speakers
Radio ..... Fig. 08A - 305
Antenna ..... Fig. 08A - 310
Speakers ..... Fig. 08A - 315

Consoles
Console Cup Holder ..... Fig. 08A - 405

Instrument Panel
Figure 08A-105

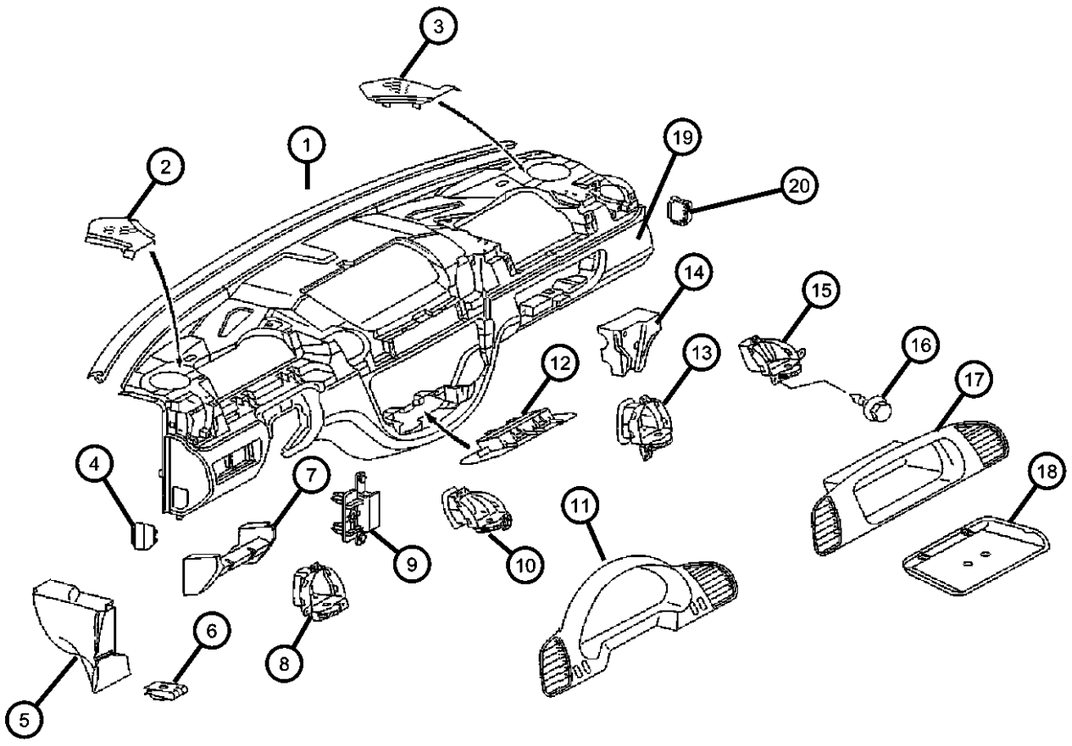

ITEM	PART NUMBER	QTY	LINE	SERIES	BODY	ENGINE	TRANS	TRIM	DESCRIPTION
1									SEAL, Windshield
	05122955AA	1	2, 6	L	01, 02, 06				
		1	2, 6	L	11, 12, 14, 15, 16				
		1	2, 6	L	51, 52, 54, 55, 56				
		1	3, 7	L	12, 15, 16				
2									COVER, Speaker Opening
	05104269AA	1	2, 6	L	01, 02, 06				Left
		1	2, 6	L	11, 12, 14, 15, 16				Left
		1	2, 6	L	51, 52, 54, 55, 56				Left
		1	3, 7	L	12, 15, 16				Left
3									COVER, Speaker Opening
	05104270AA	1	2, 6	L	01, 02, 06				Right
		1	2, 6	L	11, 12, 14, 15, 16				Right
		1	2, 6	L	51, 52, 54, 55, 56				Right
		1	3, 7	L	12, 15, 16				Right
4									PLUG, Instrument Panel
	05122919AA	1	2, 6	L	01, 02, 06				
		1	2, 6	L	11, 12, 14, 15, 16				
		1	2, 6	L	51, 52, 54, 55, 56				
		1	3, 7	L	12, 15, 16				
5									END CAP, Instrument Panel
	05122934AA	1	2, 6	L	01, 02, 06				
		1	2, 6	L	11, 12, 14, 15, 16				
		1	2, 6	L	51, 52, 54, 55, 56				

SPRINTER (VA)

SERIES	LINE	BODY	ENGINE	TRANSMISSION
L = LOWLINE	3 = HD DODGE 2WD 6 = Lt. Duty DODGE 4WD 2 = Med. Duty DODGE 2WD 7 = Med. Duty DODGE 4WD	55 = Wagon 140" 54 = Wagon 118" 52 = Wagon 140" 51 = Wagon 118" 12 = Van 140" 11 = Van 118" 06 = Front Section 158" 14 = Van 118" 15 = Van 140" 16 = Van 158" 56 = Wagon 158" 01 = Chassis Forward Control 118" 02 = Chassis Forward Control 140"	EX8 = Engine-2.7L I5 Mercedes Turbo Diesel	DGJ = Transmission-5-Spd. Automatic,W5A580

Instrument Panel
Figure 08A-105

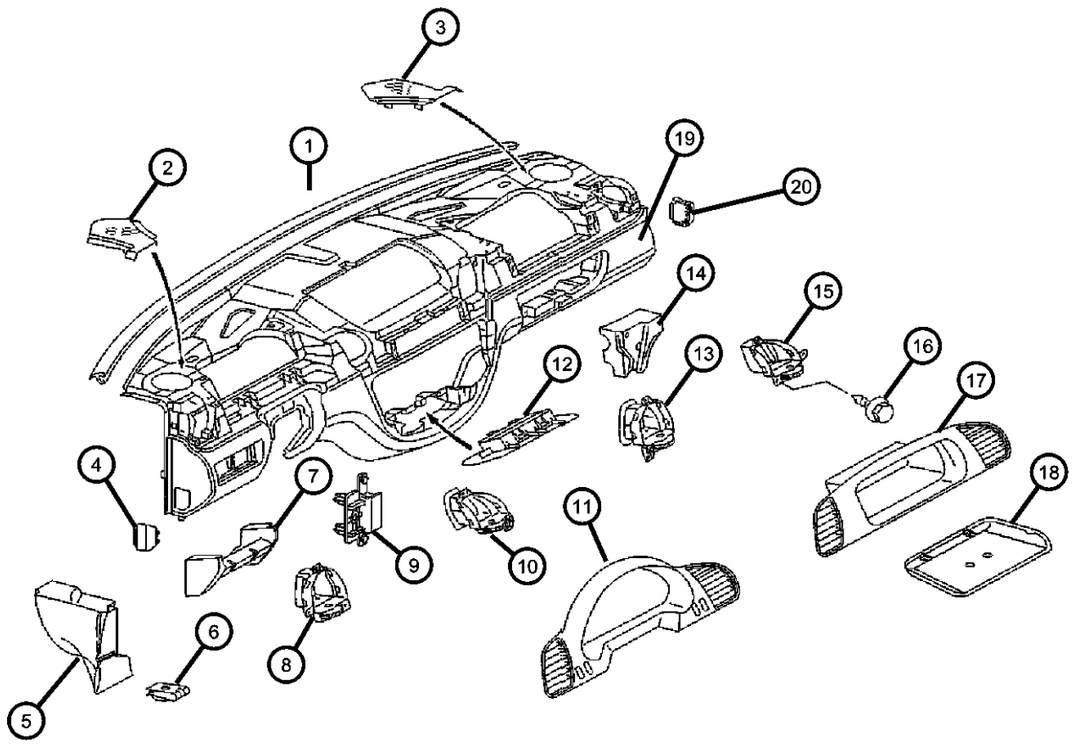

ITEM	PART NUMBER	QTY	LINE	SERIES	BODY	ENGINE	TRANS	TRIM	DESCRIPTION
		1	3, 7	L	12, 15, 16				
6									NUT, Spring U Type
	05133416AA	99	2, 6	L	01, 02, 06				
		99	2, 6	L	11, 12, 14, 15, 16				
		99	2, 6	L	51, 52, 54, 55, 56				
		4	3, 7	L	12, 15, 16				
7									PAD, Instrument Panel
	05122933AA	1	2, 6	L	01, 02, 06				
		1	2, 6	L	11, 12, 14, 15, 16				
		1	2, 6	L	51, 52, 54, 55, 56				
		1	3, 7	L	12, 15, 16				
8									OUTLET, Air
	05104252AA	1	2, 6	L	01, 02, 06				
		1	2, 6	L	11, 12, 14, 15, 16				
		1	2, 6	L	51, 52, 54, 55, 56				
		1	3, 7	L	12, 15, 16				
9									BRACKET, Mounting
	05122891AA	2	2, 6	L	01, 02, 06				
		2	2, 6	L	11, 12, 14, 15, 16				
		2	2, 6	L	51, 52, 54, 55, 56				
		2	3, 7	L	12, 15, 16				
10									OUTLET, Air
	05104253AA	1	2, 6	L	01, 02, 06				
		1	2, 6	L	11, 12, 14, 15, 16				

SPRINTER (VA)

SERIES	LINE	BODY	ENGINE	TRANSMISSION
L = LOWLINE	3 = HD DODGE 2WD 6 = Lt. Duty DODGE 4WD 2 = Med. Duty DODGE 2WD 7 = Med. Duty DODGE 4WD	55 = Wagon 140" 54 = Wagon 118" 52 = Wagon 140" 51 = Wagon 118" 12 = Van 140" 11 = Van 118" 06 = Front Section 158" 14 = Van 118" 15 = Van 140" 16 = Van 158" 56 = Wagon 158" 01 = Chassis Forward Control 118" 02 = Chassis Forward Control 140"	EX8 = Engine-2.7L I5 Mercedes Turbo Diesel	DGJ = Transmission-5-Spd. Automatic,W5A580

Instrument Panel
Figure 08A-105

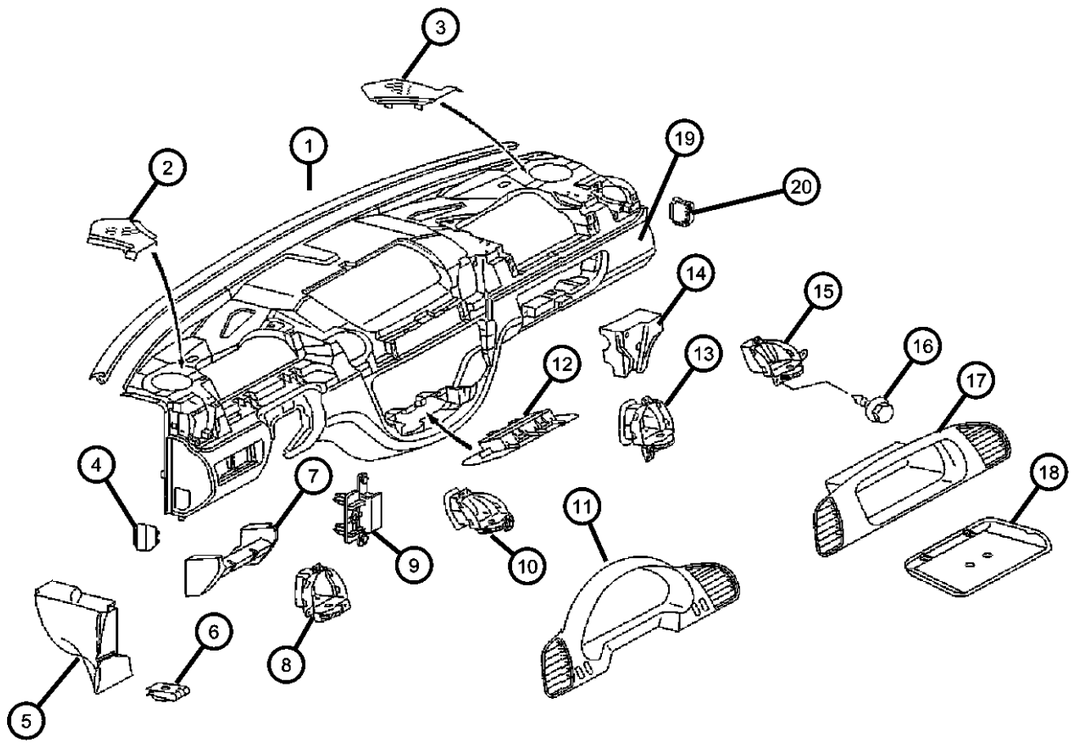

ITEM	PART NUMBER	QTY	LINE	SERIES	BODY	ENGINE	TRANS	TRIM	DESCRIPTION
		1	2, 6	L	51, 52, 54, 55, 56				
		1	3, 7	L	12, 15, 16				
11									BEZEL, Cluster
	05104262AA	1	2, 6	L	01, 02, 06				
		1	2, 6	L	11, 12, 14, 15, 16				
		1	2, 6	L	51, 52, 54, 55, 56				
		1	3, 7	L	12, 15, 16				
12									COVER, Instrument Panel
	05122927AA	1	2, 6	L	01, 02, 06				
		1	2, 6	L	11, 12, 14, 15, 16				
		1	2, 6	L	51, 52, 54, 55, 56				
		1	3, 7	L	12, 15, 16				
13									OUTLET, Air
	05104256AA	1	2, 6	L	01, 02, 06				
		1	2, 6	L	11, 12, 14, 15, 16				
		1	2, 6	L	51, 52, 54, 55, 56				
		1	3, 7	L	12, 15, 16				
14									PAD, Instrument Panel
	05122932AA	1	2, 6	L	01, 02, 06				
		1	2, 6	L	11, 12, 14, 15, 16				
		1	2, 6	L	51, 52, 54, 55, 56				
		1	3, 7	L	12, 15, 16				
15									OUTLET, Air
	05104258AA	1	2, 6	L	01, 02, 06				

SPRINTER (VA)

SERIES	LINE	BODY	ENGINE	TRANSMISSION
L = LOWLINE	3 = HD DODGE 2WD 6 = Lt. Duty DODGE 4WD 2 = Med. Duty DODGE 2WD 7 = Med. Duty DODGE 4WD	55 = Wagon 140" 54 = Wagon 118" 52 = Wagon 140" 51 = Wagon 118" 12 = Van 140" 11 = Van 118" 06 = Front Section 158" 14 = Van 118" 15 = Van 140" 16 = Van 158" 56 = Wagon 158" 01 = Chassis Forward Control 118" 02 = Chassis Forward Control 140"	EX8 = Engine-2.7L I5 Mercedes Turbo Diesel	DGJ = Transmission-5-Spd. Automatic,W5A580

Instrument Panel
Figure 08A-105

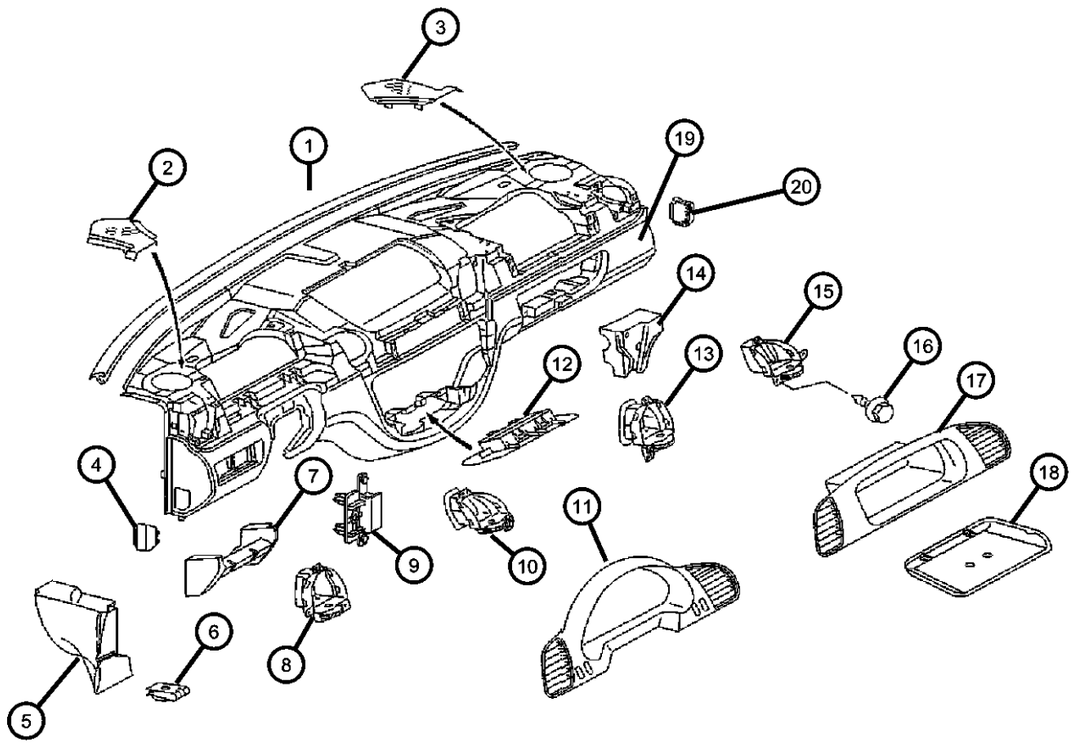

ITEM	PART NUMBER	QTY	LINE	SERIES	BODY	ENGINE	TRANS	TRIM	DESCRIPTION
		1	2, 6	L	11, 12, 14, 15, 16				
		1	2, 6	L	51, 52, 54, 55, 56				
		1	3, 7	L	12, 15, 16				
16									SCREW
	06104610AA	1	2, 6	L	01, 02, 06		DGJ		
		1	2, 6	L	11, 12, 14, 15, 16				
		1	2, 6	L	51, 52, 54, 55, 56				
		1	3, 7	L	12, 15, 16				
17									BIN, Instrument Panel
	05104263AA	1	2, 6	L	01, 02, 06				
		1	2, 6	L	11, 12, 14, 15, 16				
		1	2, 6	L	51, 52, 54, 55, 56				
		1	3, 7	L	12, 15, 16				
18									TRAY, Instrument Panel
	05122952AA	1	2, 6	L	01, 02, 06				
		1	2, 6	L	11, 12, 14, 15, 16				
		1	2, 6	L	51, 52, 54, 55, 56				
		1	3, 7	L	12, 15, 16				
19									PANEL, Instrument
	05122362AA	1	2, 6	L	01, 02, 06				
		1	2, 6	L	11, 12, 14, 15, 16				
		1	2, 6	L	51, 52, 54, 55, 56				
		1	3, 7	L	12, 15, 16				

SPRINTER (VA)

SERIES	LINE	BODY	ENGINE	TRANSMISSION
L = LOWLINE	3 = HD DODGE 2WD 6 = Lt. Duty DODGE 4WD 2 = Med. Duty DODGE 2WD 7 = Med. Duty DODGE 4WD	55 = Wagon 140" 54 = Wagon 118" 52 = Wagon 140" 51 = Wagon 118" 12 = Van 140" 11 = Van 118" 06 = Front Section 158" 14 = Van 118" 15 = Van 140" 16 = Van 158" 56 = Wagon 158" 01 = Chassis Forward Control 118" 02 = Chassis Forward Control 140"	EX8 = Engine-2.7L I5 Mercedes Turbo Diesel	DGJ = Transmission-5-Spd. Automatic,W5A580

Instrument Panel
Figure 08A-105

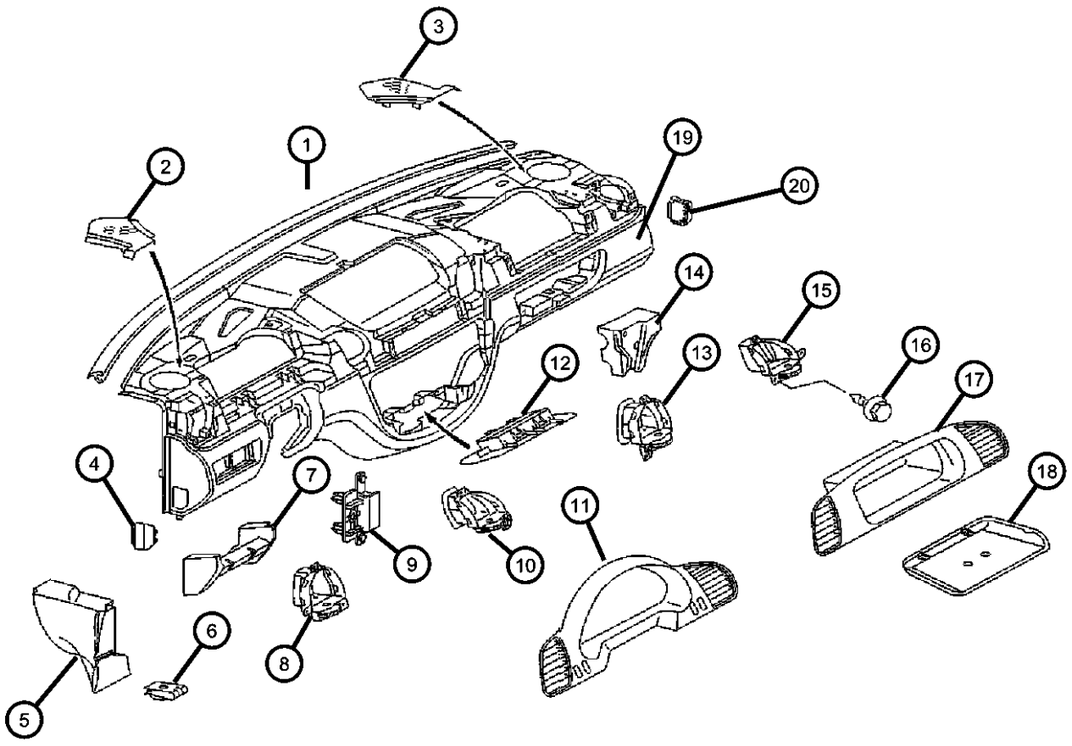

ITEM	PART NUMBER	QTY	LINE	SERIES	BODY	ENGINE	TRANS	TRIM	DESCRIPTION
20									PLUG, Instrument Panel
	05122921AA	1	2, 6	L	01, 02, 06				
		1	2, 6	L	11, 12, 14, 15, 16				
		1	2, 6	L	51, 52, 54, 55, 56				
		1	3, 7	L	12, 15, 16				

SPRINTER (VA)

SERIES	LINE	BODY	ENGINE	TRANSMISSION
L = LOWLINE	3 = HD DODGE 2WD 6 = Lt. Duty DODGE 4WD 2 = Med. Duty DODGE 2WD 7 = Med. Duty DODGE 4WD	55 = Wagon 140" 54 = Wagon 118" 52 = Wagon 140" 51 = Wagon 118" 12 = Van 140" 11 = Van 118" 06 = Front Section 158" 14 = Van 118" 15 = Van 140" 16 = Van 158" 56 = Wagon 158" 01 = Chassis Forward Control 118" 02 = Chassis Forward Control 140"	EX8 = Engine-2.7L I5 Mercedes Turbo Diesel	DGJ = Transmission-5-Spd. Automatic,W5A580

Instrument Panel Bezel and Related Parts
Figure 08A-110

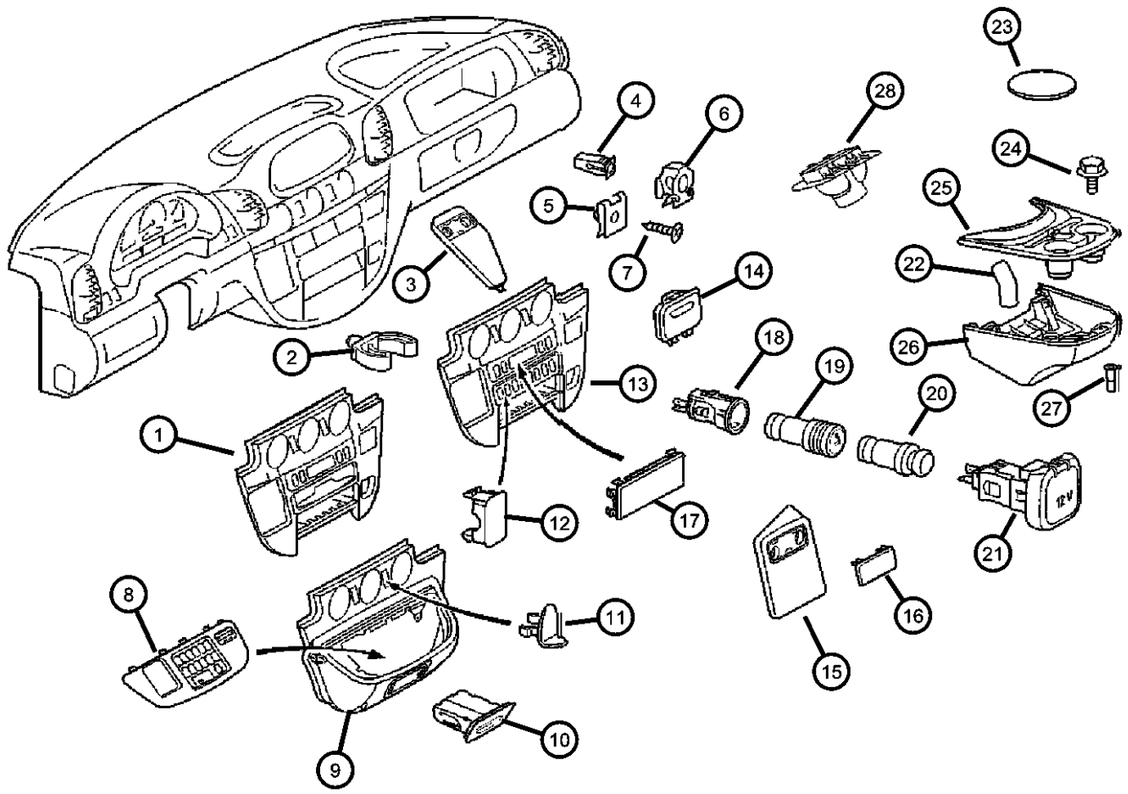

ITEM	PART NUMBER	QTY	LINE	SERIES	BODY	ENGINE	TRANS	TRIM	DESCRIPTION
1									BEZEL, Instrument Panel, Center
	05122372AA	1	2, 6	L	01, 02, 06		DGJ		
		1	2, 6	L	11, 12, 14, 15, 16		DGJ		
		1	2, 6	L	51, 52, 54, 55, 56		DGJ		
		1	3, 7	L	12, 15, 16		DGJ		
2									CLIP, U Type
	05125871AA	2	2, 6	L	01, 02, 06		DGJ		
		2	2, 6	L	14, 15, 16, 11, 12		DGJ		
		2	6, 2	L	51, 52, 54, 55, 56		DGJ		
		2	3, 7	L	12, 15, 16		DGJ		
3									BRACKET, Instrument Panel
	05122912AA	1	2, 6	L	51, 52, 54, 55, 56		DGJ		
		1	3, 7	L	12, 15, 16		DGJ		
		1	2, 6	L	01, 02, 06		DGJ		
		1	2, 6	L	11, 12, 14, 15, 16		DGJ		
4									NUT, Plastic Snap-in
	05125576AA	2	2, 6	L	01, 02, 06		DGJ		
		3	2, 6	L	11, 12, 14, 15, 16				
		3	2, 6	L	51, 52, 54, 55, 56				
		3	3, 7	L	12, 15, 16				
5									NUT, Clip-On
	05125857AA	2	2, 6	L	01, 02, 06		DGJ		
	05125857AB	2	2, 6	L	11, 12, 14, 15, 16				
		2	2, 6	L	51, 52, 54, 55, 56				

SPRINTER (VA)

SERIES	LINE	BODY	ENGINE	TRANSMISSION
L = LOWLINE	3 = HD DODGE 2WD 6 = Lt. Duty DODGE 4WD 2 = Med. Duty DODGE 2WD 7 = Med. Duty DODGE 4WD	55 = Wagon 140" 54 = Wagon 118" 52 = Wagon 140" 51 = Wagon 118" 12 = Van 140" 11 = Van 118" 06 = Front Section 158" 14 = Van 118" 15 = Van 140" 16 = Van 158" 56 = Wagon 158" 01 = Chassis Forward Control 118" 02 = Chassis Forward Control 140"	EX8 = Engine-2.7L I5 Mercedes Turbo Diesel	DGJ = Transmission-5-Spd. Automatic,W5A580

Instrument Panel Bezel and Related Parts
Figure 08A-110

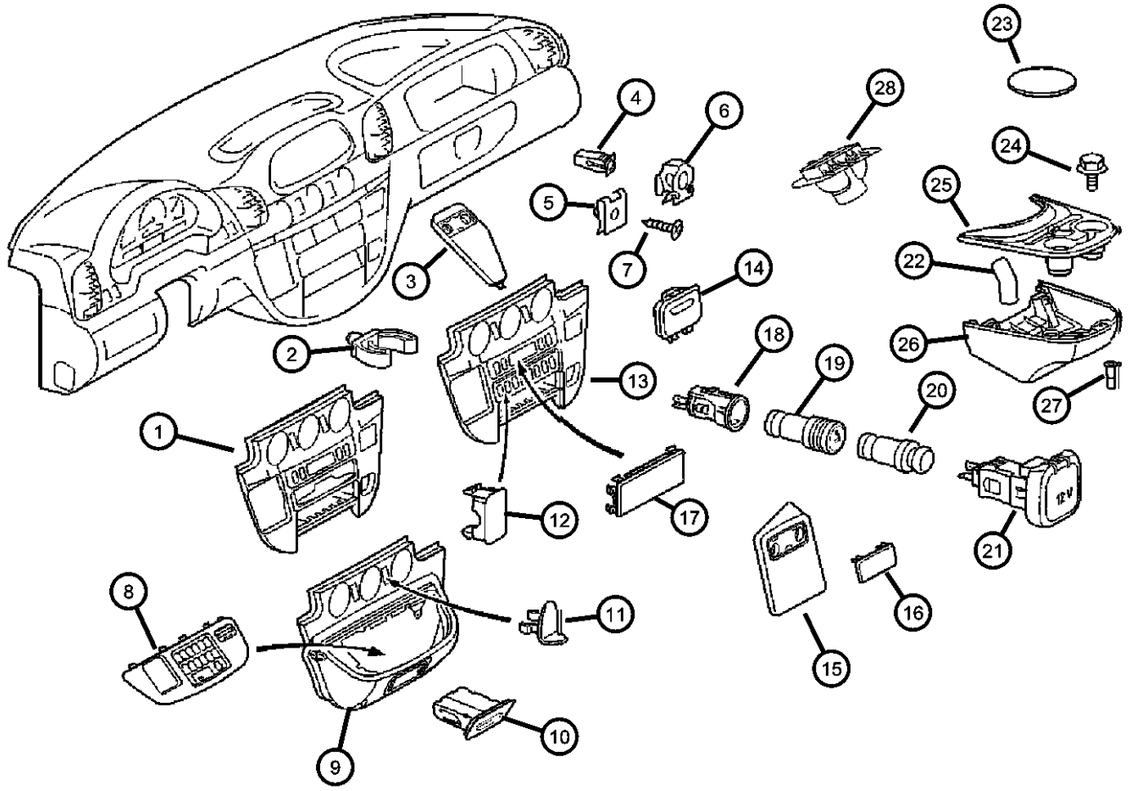

ITEM	PART NUMBER	QTY	LINE	SERIES	BODY	ENGINE	TRANS	TRIM	DESCRIPTION
		2	3, 7	L	12, 15, 16				
6									NUT, Spring
	05125861AA	2	2, 6	L	01, 02, 06				
		2	2, 6	L	11, 12, 14, 15, 16				
		2	2, 6	L	51, 52, 54, 55, 56				
		2	3, 7	L	12, 15, 16				
7									SCREW
	06104610AA	2	2, 6	L	11, 12, 14, 15, 16				
		2	2, 6	L	01, 02, 06				
		2	2, 6	L	51, 52, 54, 55, 56				
		2	3, 7	L	12, 15, 16				
8									BEZEL, Center Console
	05122928AA	1	2, 6	L	01, 02, 06		DGJ		
		1	2, 6	L	11, 12, 14, 15, 16		DGJ		
		1	2, 6	L	51, 52, 54, 55, 56		DGJ		
		1	3, 7	L	12, 15, 16		DGJ		
9									CONSOLE, Instrument Panel
	05122880AA	1	2, 6	L	01, 02, 06		DGJ		
		1	2, 6	L	14, 15, 16, 11, 12		DGJ		
		1	2, 6	L	51, 52, 54, 55, 56		DGJ		
		1	3, 7	L	12, 15, 16		DGJ		
10									ASH RECEIVER, Instrument Panel
	05124226AA	1	2, 6	L	01, 02, 06		DGJ		
		1	2, 6	L	11, 12, 14, 15, 16		DGJ		

SPRINTER (VA)

SERIES	LINE	BODY	ENGINE	TRANSMISSION
L = LOWLINE	3 = HD DODGE 2WD 6 = Lt. Duty DODGE 4WD 2 = Med. Duty DODGE 2WD 7 = Med. Duty DODGE 4WD	55 = Wagon 140" 54 = Wagon 118" 52 = Wagon 140" 51 = Wagon 118" 12 = Van 140" 11 = Van 118" 06 = Front Section 158" 14 = Van 118" 15 = Van 140" 16 = Van 158" 56 = Wagon 158" 01 = Chassis Forward Control 118" 02 = Chassis Forward Control 140"	EX8 = Engine-2.7L I5 Mercedes Turbo Diesel	DGJ = Transmission-5-Spd. Automatic,W5A580

Instrument Panel Bezel and Related Parts
Figure 08A-110

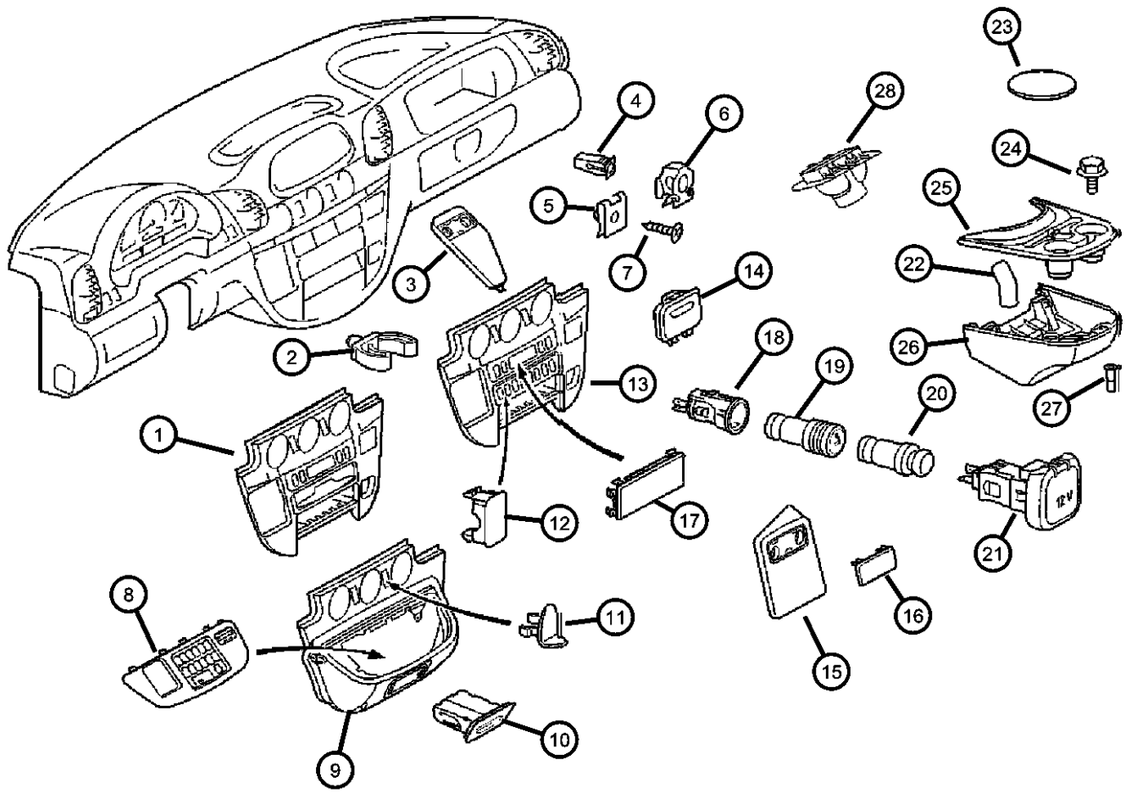

ITEM	PART NUMBER	QTY	LINE	SERIES	BODY	ENGINE	TRANS	TRIM	DESCRIPTION
		1	2, 6	L	51, 52, 54, 55, 56		DGJ		
		1	3, 7	L	12, 15, 16		DGJ		
11									COVER, Center Console
	05122885AA	1	2, 6	L	11, 12, 14, 15, 16		DGJ		
		1	2, 6	L	51, 52, 54, 55, 56		DGJ		
		1	2, 6	L	01, 02, 06		DGJ		
		1	3, 7	L	12, 15, 16		DGJ		
12									COVER, Switch Opening
	05122925AA	3	2, 6	L	01, 02, 06				
		3	2, 6	L	11, 12, 14, 15, 16				
		3	2, 6	L	51, 52, 54, 55, 56				
		3	3, 7	L	12, 15, 16				
13									BEZEL, Instrument Panel, Center
	05122873AA	1	2, 6	L	01, 02, 06		DGJ		
		1	2, 6	L	11, 12, 14, 15, 16		DGJ		
		1	2, 6	L	51, 52, 54, 55, 56		DGJ		
		1	3, 7	L	12, 15, 16		DGJ		
14									COVER, Instrument Panel
	05122391AA	1	2, 6	L	01, 02, 06				Paper clip
		1	2, 6	L	11, 12, 14, 15, 16				Paper clip
		1	2, 6	L	51, 52, 54, 55, 56				Paper clip
		1	3, 7	L	02, 06				Paper clip
		1	3, 7	L	12, 15, 16				Paper clip
15									BEZEL, Instrument Panel

SPRINTER (VA)

SERIES	LINE	BODY	ENGINE	TRANSMISSION
L = LOWLINE	3 = HD DODGE 2WD 6 = Lt. Duty DODGE 4WD 2 = Med. Duty DODGE 2WD 7 = Med. Duty DODGE 4WD	55 = Wagon 140" 54 = Wagon 118" 52 = Wagon 140" 51 = Wagon 118" 12 = Van 140" 11 = Van 118" 06 = Front Section 158" 14 = Van 118" 15 = Van 140" 16 = Van 158" 56 = Wagon 158" 01 = Chassis Forward Control 118" 02 = Chassis Forward Control 140"	EX8 = Engine-2.7L I5 Mercedes Turbo Diesel	DGJ = Transmission-5-Spd. Automatic,W5A580

AR = use ase required - = Non illustrrated part

Instrument Panel Bezel and Related Parts
Figure 08A-110

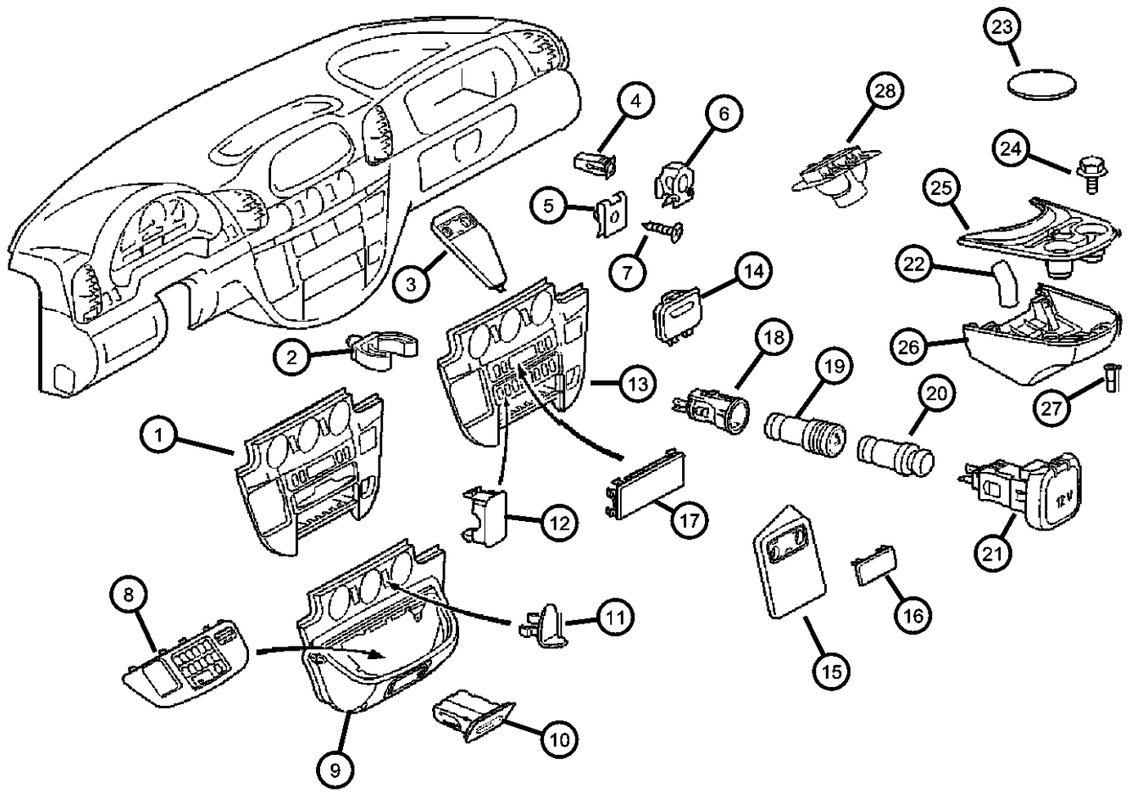

ITEM	PART NUMBER	QTY	LINE	SERIES	BODY	ENGINE	TRANS	TRIM	DESCRIPTION
	05122909AA	1	2, 6	L	01, 02, 06		DGJ		
		1	2, 6	L	11, 12, 14, 15, 16		DGJ		
		1	2, 6	L	51, 52, 54, 55, 56		DGJ		
		1	3, 7	L	12, 15, 16		DGJ		
16									COVER, Instrument Panel
	05122878AA	1	2, 6	L	11, 12, 14, 15, 16				
		1	2, 6	L	01, 02, 06				
		1	6, 2	L	51, 52, 54, 55, 56				
		1	3, 7	L	12, 15, 16				
17									COVER, Radio Opening
	05103928AA	1	2, 6	L	01, 02, 06				
		1	2, 6	L	11, 12, 14, 15, 16				
		1	2, 6	L	51, 52, 54, 55, 56				
		1	3, 7	L	12, 15, 16				
18									BASE, Cigar Lighter
	05124456AA	1	2, 6	L	01, 02, 06		DGJ		
		1	2, 6	L	11, 12, 14, 15, 16		DGJ		
		1	2, 6	L	51, 52, 54, 55, 56		DGJ		
		1	3, 7	L	12, 15, 16		DGJ		
19									ELEMENT, Cigar Lighter
	05103679AA	1	2, 6	L	01, 02, 06		DGJ		
		1	2, 6	L	11, 12, 14, 15, 16		DGJ		
		1	2, 6	L	55, 56, 51, 52, 54		DGJ		

SPRINTER (VA)

SERIES	LINE	BODY	ENGINE	TRANSMISSION
L = LOWLINE	3 = HD DODGE 2WD 6 = Lt. Duty DODGE 4WD 2 = Med. Duty DODGE 2WD 7 = Med. Duty DODGE 4WD	55 = Wagon 140" 54 = Wagon 118" 52 = Wagon 140" 51 = Wagon 118" 12 = Van 140" 11 = Van 118" 06 = Front Section 158" 14 = Van 118" 15 = Van 140" 16 = Van 158" 56 = Wagon 158" 01 = Chassis Forward Control 118" 02 = Chassis Forward Control 140"	EX8 = Engine-2.7L I5 Mercedes Turbo Diesel	DGJ = Transmission-5-Spd. Automatic,W5A580

Instrument Panel Bezel and Related Parts
Figure 08A-110

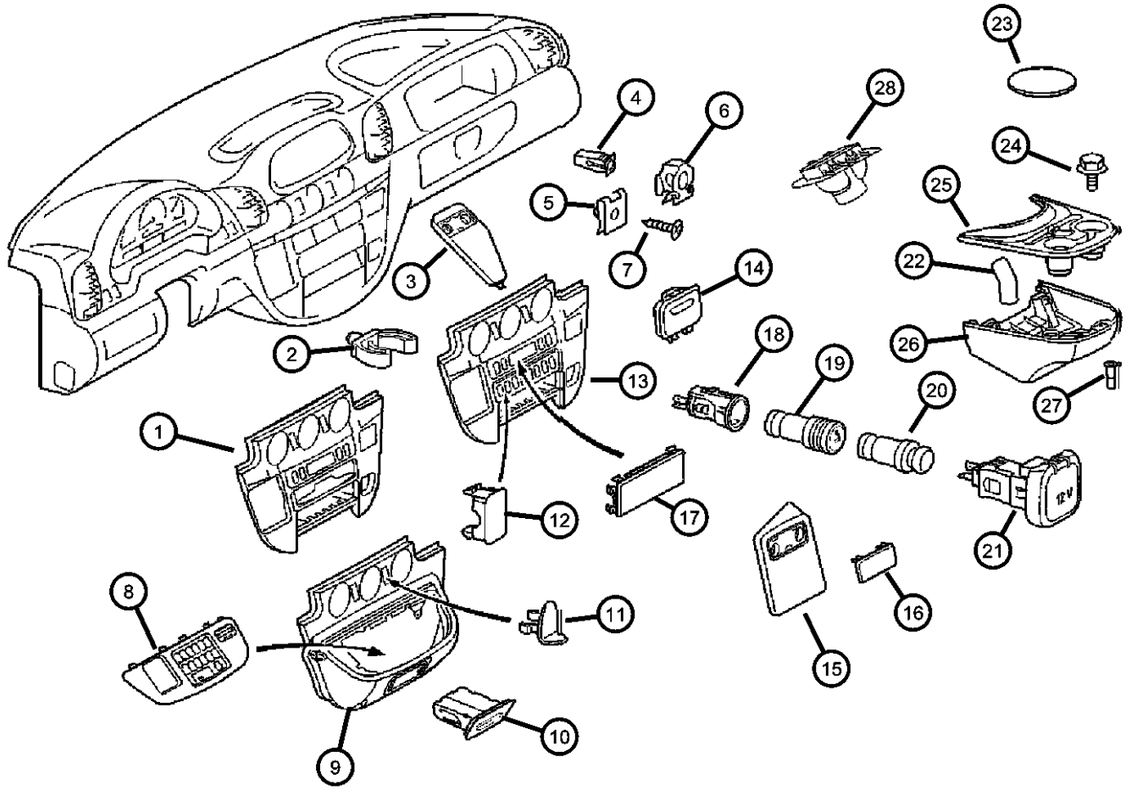

ITEM	PART NUMBER	QTY	LINE	SERIES	BODY	ENGINE	TRANS	TRIM	DESCRIPTION
		1	3, 7	L	12, 15, 16		DGJ		
20									SOCKET, Accessory
	05124598AA	1	2, 6	L	01, 02, 06		DGJ		
		1	2, 6	L	11, 12, 14, 15, 16		DGJ		
		1	2, 6	L	51, 52, 54, 55, 56		DGJ		
		1	3, 7	L	12, 15, 16		DGJ		
21									POWER OUTLET
	05124458AA	1	2, 6	L	11, 12, 14, 15, 16		DGJ		
		1	2, 6	L	51, 52, 54, 55, 56		DGJ		
		1	3, 7	L	12, 15, 16				
		1	2, 6	L	01, 02, 06				
22									HOSE
	05104488AA	1	2, 6	L	01, 02, 06				
		1	2, 6	L	11, 12, 14, 15, 16				Air Duct Adapter
		1	2, 6	L	51, 52, 54, 55, 56				Air Duct Adapter
		1	3, 7	L	12, 15, 16				Air Duct Adapter
23									MAT, Single Cup
	05122953AA	2	2, 6	L	01, 02, 06				
		2	2, 6	L	11, 12, 14, 15, 16				
		2	2, 6	L	51, 52, 54, 55, 56				
		2	3, 7	L	12, 15, 16				
24									SCREW, Hex Flange Head
	06104121AA	4	2, 6	L	51, 52, 54, 55, 56				
		4	2, 6	L	01, 02, 06				

SPRINTER (VA)

SERIES	LINE	BODY	ENGINE	TRANSMISSION
L = LOWLINE	3 = HD DODGE 2WD 6 = Lt. Duty DODGE 4WD 2 = Med. Duty DODGE 2WD 7 = Med. Duty DODGE 4WD	55 = Wagon 140" 54 = Wagon 118" 52 = Wagon 140" 51 = Wagon 118" 12 = Van 140" 11 = Van 118" 06 = Front Section 158" 14 = Van 118" 15 = Van 140" 16 = Van 158" 56 = Wagon 158" 01 = Chassis Forward Control 118" 02 = Chassis Forward Control 140"	EX8 = Engine-2.7L I5 Mercedes Turbo Diesel	DGJ = Transmission-5-Spd. Automatic,W5A580

Instrument Panel Bezel and Related Parts
Figure 08A-110

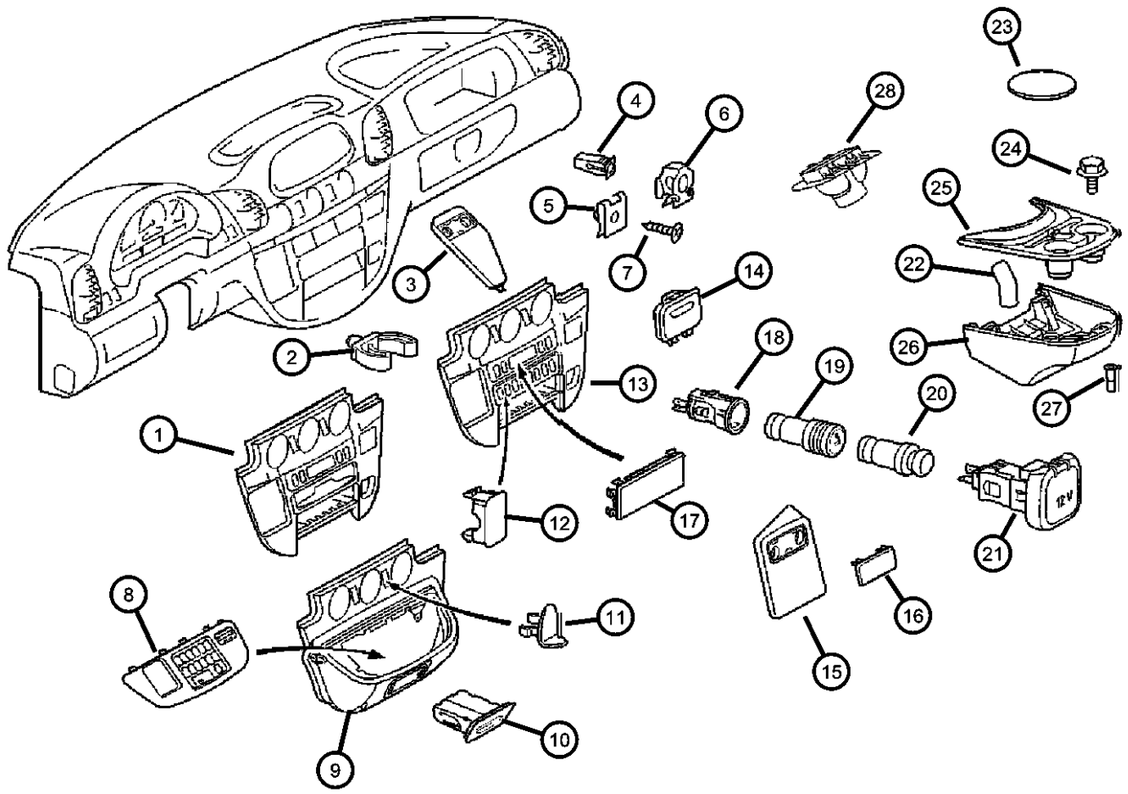

ITEM	PART NUMBER	QTY	LINE	SERIES	BODY	ENGINE	TRANS	TRIM	DESCRIPTION
		4	2, 6	L	11, 12, 14, 15, 16				
		4	3, 7	L	12, 15, 16				
25									CUP HOLDER, Lid
	05104254AA	1	2, 6	L	01, 02, 06				
		1	2, 6	L	11, 12, 14, 15, 16				
		1	2, 6	L	51, 52, 54, 55, 56				
		1	3, 7	L	12, 15, 16				
26									HOUSING, Cup Holder
	05104255AA	1	2, 6	L	55, 56, 51, 52, 54				
		1	3, 7	L	12, 15, 16				
		1	2, 6	L	01, 02, 06				
		1	2, 6	L	11, 12, 14, 15, 16				
27									NUT, Rivet
	05133975AA	4	2, 6	L	01, 02, 06				
		4	2, 6	L	11, 12, 14, 15, 16				
		4	2, 6	L	51, 52, 54, 55, 56				
		4	3, 7	L	12, 15, 16				
28									ADAPTER, Air Duct
	05104267AA	1	3, 7	L	12, 15, 16				
		1	2, 6	L	01, 02, 06				
		1	2, 6	L	11, 12, 14, 15, 16				
		1	2, 6	L	51, 52, 54, 55, 56				

SPRINTER (VA)

SERIES	LINE	BODY	ENGINE	TRANSMISSION
L = LOWLINE	3 = HD DODGE 2WD 6 = Lt. Duty DODGE 4WD 2 = Med. Duty DODGE 2WD 7 = Med. Duty DODGE 4WD	55 = Wagon 140" 54 = Wagon 118" 52 = Wagon 140" 51 = Wagon 118" 12 = Van 140" 11 = Van 118" 06 = Front Section 158" 14 = Van 118" 15 = Van 140" 16 = Van 158" 56 = Wagon 158" 01 = Chassis Forward Control 118" 02 = Chassis Forward Control 140"	EX8 = Engine-2.7L I5 Mercedes Turbo Diesel	DGJ = Transmission-5-Spd. Automatic,W5A580

Ash Reciever and Glove Box
Figure 08A-115

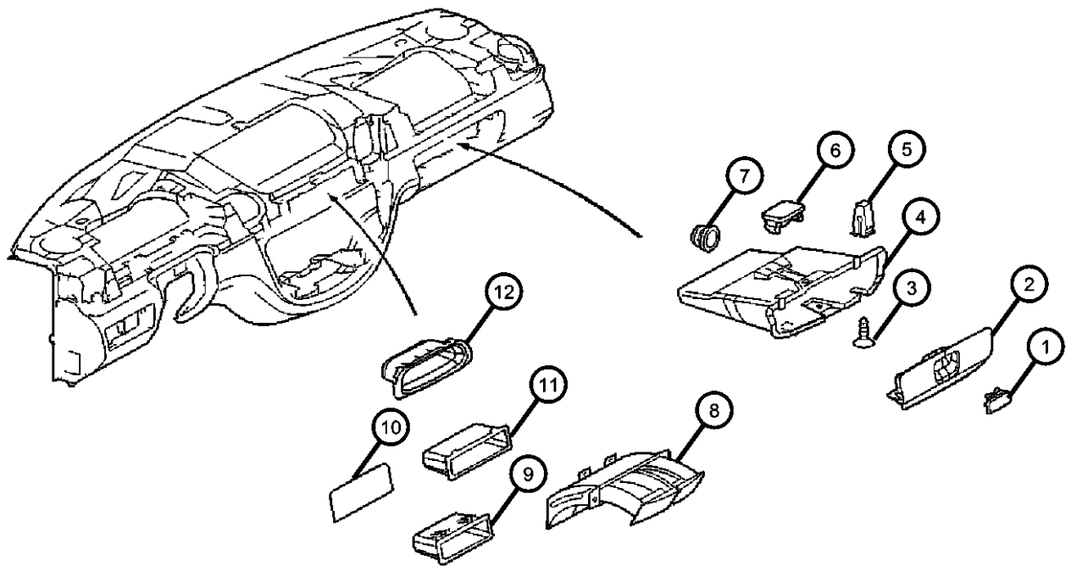

ITEM	PART NUMBER	QTY	LINE	SERIES	BODY	ENGINE	TRANS	TRIM	DESCRIPTION
1									LATCH, Glovebox
	05104257AA	1	2, 6	L	01, 02, 06				
		1	2, 6	L	11, 12, 14, 15, 16				
		1	2, 6	L	51, 52, 54, 55, 56				
		1	3, 7	L	12, 15, 16				
2									DOOR, Glove Box
	05104260AA	1	2, 6	L	01, 02, 06				
		1	2, 6	L	11, 12, 14, 15, 16				
		1	2, 6	L	51, 52, 54, 55, 56				
		1	3, 7	L	12, 15, 16				
3									SCREW
	06104610AA	8	2, 6	L	01, 02, 06				
		1	2, 6	L	51, 52, 54, 55, 56				
		1	2, 6	L	11, 12, 14, 15, 16				
		1	3, 7	L	12, 15, 16				
4									GLOVE BOX, Instrument Panel
	05122413AA	1	2, 6	L	01, 02, 06				
		1	2, 6	L	11, 12, 14, 15, 16				
		1	2, 6	L	51, 52, 54, 55, 56				
		1	3, 7	L	12, 15, 16				
5									NUT, Plastic Snap-in
	05125576AA	2	2, 6	L	01, 02, 06		DGJ		
		2	2, 6	L	11, 12, 14, 15, 16				
		2	2, 6	L	51, 52, 54, 55, 56				

SPRINTER (VA)

SERIES	LINE	BODY	ENGINE	TRANSMISSION
L = LOWLINE	3 = HD DODGE 2WD 6 = Lt. Duty DODGE 4WD 2 = Med. Duty DODGE 2WD 7 = Med. Duty DODGE 4WD	55 = Wagon 140" 54 = Wagon 118" 52 = Wagon 140" 51 = Wagon 118" 12 = Van 140" 11 = Van 118" 06 = Front Section 158" 14 = Van 118" 15 = Van 140" 16 = Van 158" 56 = Wagon 158" 01 = Chassis Forward Control 118" 02 = Chassis Forward Control 140"	EX8 = Engine-2.7L I5 Mercedes Turbo Diesel	DGJ = Transmission-5-Spd. Automatic,W5A580

AR = use ase required - = Non illustrrated part

Ash Reciever and Glove Box
Figure 08A-115

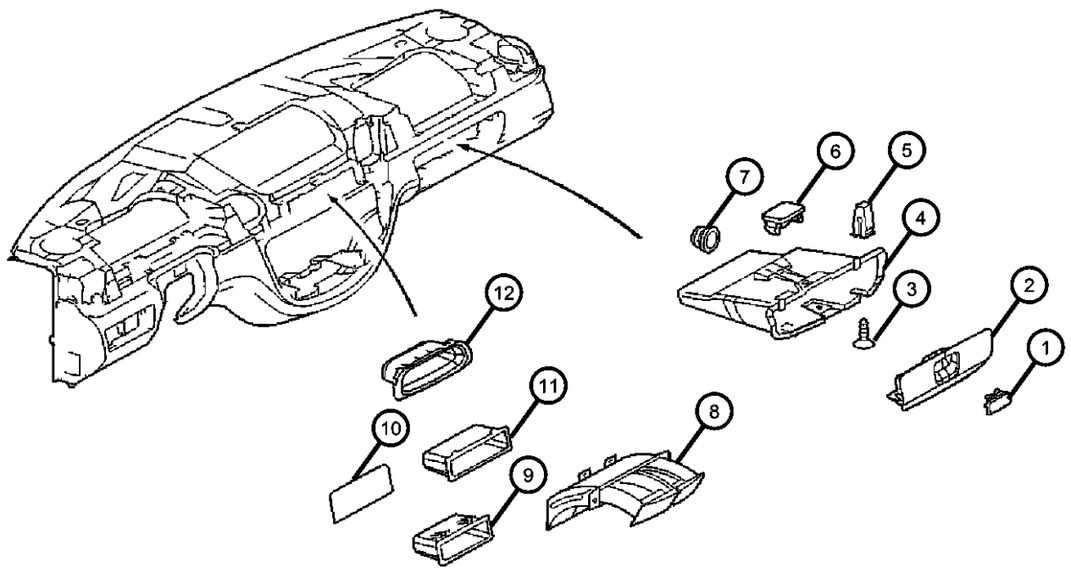

ITEM	PART NUMBER	QTY	LINE	SERIES	BODY	ENGINE	TRANS	TRIM	DESCRIPTION
		2	3, 7	L	12, 15, 16				
6									PLUG
	05125551AA	2	2, 6	L	01, 02, 06				
		2	2, 6	L	11, 12, 14, 15, 16				
		2	2, 6	L	51, 52, 54, 55, 56				
		2	3, 7	L	12, 15, 16				
7									PLUG, Instrument Panel
	05122919AA	1	2, 6	L	01, 02, 06				
		1	2, 6	L	11, 12, 14, 15, 16				
		1	2, 6	L	51, 52, 54, 55, 56				
		1	3, 7	L	12, 15, 16				
8									ASH RECEIVER, Instrument Panel
	05124226AA	1	2, 6	L	01, 02, 06		DGJ		
		1	2, 6	L	11, 12, 14, 15, 16		DGJ		
		1	2, 6	L	51, 52, 54, 55, 56		DGJ		
		1	3, 7	L	12, 15, 16		DGJ		
9									CUBBY BOX, Instrument Panel
	05122948AA	1	2, 6	L	01, 02, 06				
		1	2, 6	L	11, 12, 14, 15, 16				
		1	2, 6	L	51, 52, 54, 55, 56				
		1	3, 7	L	12, 15, 16				
10									PAD, Backing
	05122951AA	1	2, 6	L	11, 12, 14, 15, 16				

SPRINTER (VA)

SERIES	LINE	BODY	ENGINE	TRANSMISSION
L = LOWLINE	3 = HD DODGE 2WD 6 = Lt. Duty DODGE 4WD 2 = Med. Duty DODGE 2WD 7 = Med. Duty DODGE 4WD	55 = Wagon 140" 54 = Wagon 118" 52 = Wagon 140" 51 = Wagon 118" 12 = Van 140" 11 = Van 118" 06 = Front Section 158" 14 = Van 118" 15 = Van 140" 16 = Van 158" 56 = Wagon 158" 01 = Chassis Forward Control 118" 02 = Chassis Forward Control 140"	EX8 = Engine-2.7L I5 Mercedes Turbo Diesel	DGJ = Transmission-5-Spd. Automatic,W5A580

Ash Reciever and Glove Box
Figure 08A-115

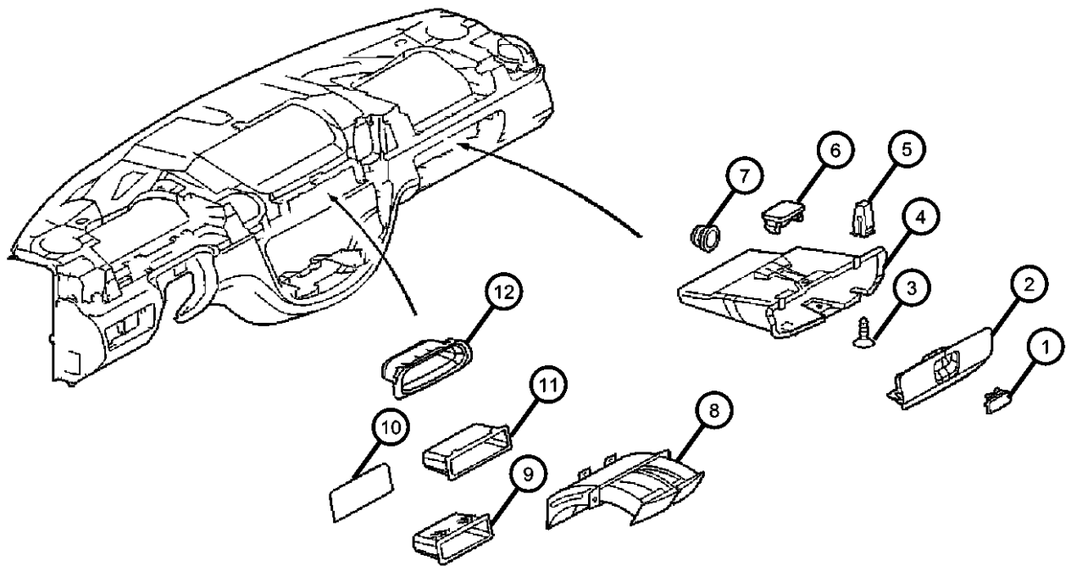

ITEM	PART NUMBER	QTY	LINE	SERIES	BODY	ENGINE	TRANS	TRIM	DESCRIPTION
		1	2, 6	L	51, 52, 54, 55, 56				
		1	2, 6	L	01, 02, 06				
		1	3, 7	L	12, 15, 16				
11									CUBBY BOX, Instrument Panel
	05122948AA	1	2, 6	L	01, 02, 06				
		1	2, 6	L	11, 12, 14, 15, 16				
		1	2, 6	L	51, 52, 54, 55, 56				
		1	3, 7	L	12, 15, 16				
12									CUBBY BOX, Instrument Panel
	05122943AA	1	2, 6	L	01, 02, 06				
		1	2, 6	L	11, 12, 14, 15, 16				
		1	2, 6	L	51, 52, 54, 55, 56				
		1	3, 7	L	12, 15, 16				

SPRINTER (VA)

SERIES	LINE	BODY	ENGINE	TRANSMISSION
L = LOWLINE	3 = HD DODGE 2WD 6 = Lt. Duty DODGE 4WD 2 = Med. Duty DODGE 2WD 7 = Med. Duty DODGE 4WD	55 = Wagon 140" 54 = Wagon 118" 52 = Wagon 140" 51 = Wagon 118" 12 = Van 140" 11 = Van 118" 06 = Front Section 158" 14 = Van 118" 15 = Van 140" 16 = Van 158" 56 = Wagon 158" 01 = Chassis Forward Control 118" 02 = Chassis Forward Control 140"	EX8 = Engine-2.7L I5 Mercedes Turbo Diesel	DGJ = Transmission-5-Spd. Automatic,W5A580

AR = use ase required - = Non illustrrated part

Instrument Panel Cover and Related Parts
Figure 08A-120

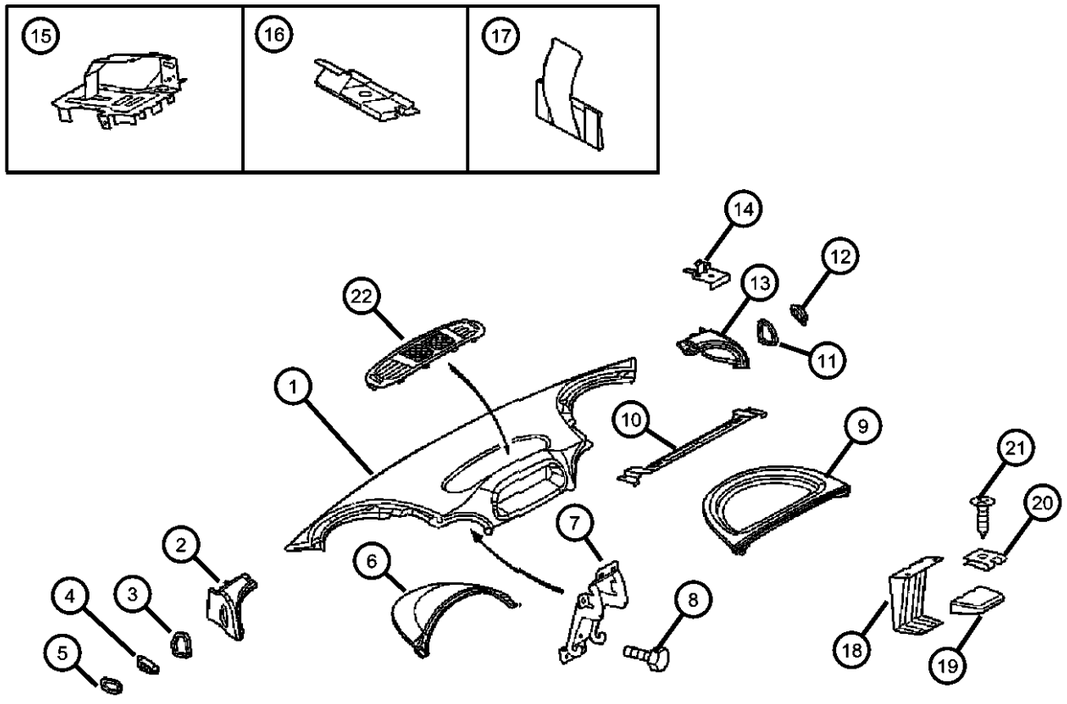

ITEM	PART NUMBER	QTY	LINE	SERIES	BODY	ENGINE	TRANS	TRIM	DESCRIPTION
1									COVER, Instrument Panel
	05122364AA	1	2, 6	L	01, 02, 06				With Comfort / Soft Look Dash
		1	2, 6	L	11, 12, 14, 15, 16				With Comfort / Soft Look Dash
		1	2, 6	L	51, 52, 54, 55, 56				With Comfort / Soft Look Dash
		1	3, 7	L	12, 15, 16				With Comfort / Soft Look Dash
2									HOUSING, Air Outlet
	05122876AA	1	2, 6	L	01, 02, 06				
		1	2, 6	L	11, 12, 14, 15, 16				
		1	3, 7	L	12, 15, 16				
3									SEAL
	05124784AA	1	2, 6	L	01, 02, 06				
		1	2, 6	L	11, 12, 14, 15, 16				
		1	2, 6	L	51, 52, 54, 55, 56				
		1	3, 7	L	12, 15, 16				
4									GRILLE, Demister
	05124910AA	1	2, 6	L	01, 02, 06				
		1	2, 6	L	11, 12, 14, 15, 16				
		1	2, 6	L	51, 52, 54, 55, 56				
		1	3, 7	L	12, 15, 16				
5									SEAL
	05124787AA	2	2, 6	L	01, 02, 06				
		2	2, 6	L	11, 12, 14, 15, 16				
		2	2, 6	L	51, 52, 54, 55, 56				
		2	3, 7	L	12, 15, 16				
6									COVER

SPRINTER (VA)

SERIES	LINE	BODY	ENGINE	TRANSMISSION
L = LOWLINE	3 = HD DODGE 2WD 6 = Lt. Duty DODGE 4WD 2 = Med. Duty DODGE 2WD 7 = Med. Duty DODGE 4WD	55 = Wagon 140" 54 = Wagon 118" 52 = Wagon 140" 51 = Wagon 118" 12 = Van 140" 11 = Van 118" 06 = Front Section 158" 14 = Van 118" 15 = Van 140" 16 = Van 158" 56 = Wagon 158" 01 = Chassis Forward Control 118" 02 = Chassis Forward Control 140"	EX8 = Engine-2.7L I5 Mercedes Turbo Diesel	DGJ = Transmission-5-Spd. Automatic,W5A580

AR = use ase required - = Non illustrrated part

Instrument Panel Cover and Related Parts
Figure 08A-120

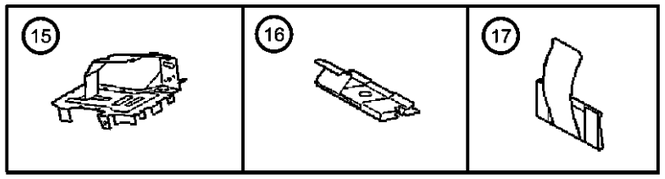

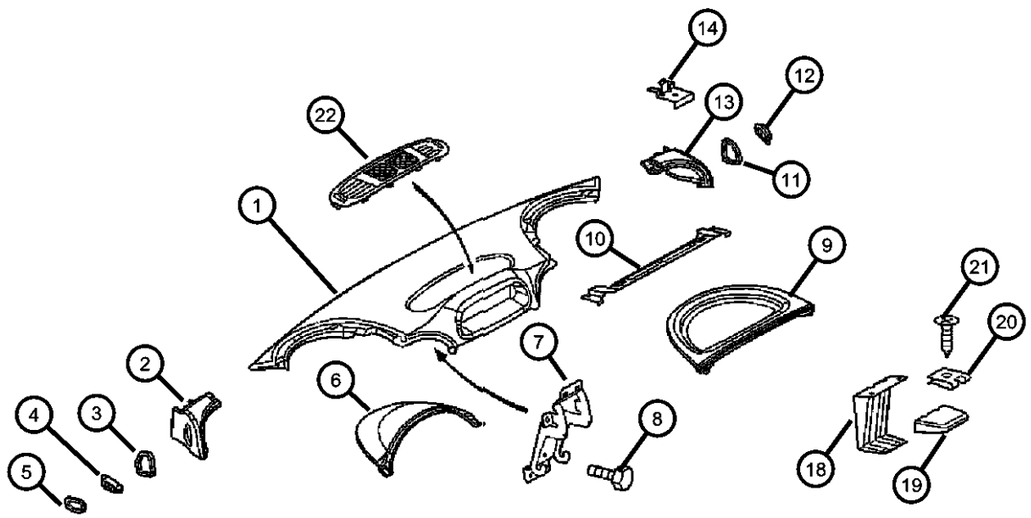

ITEM	PART NUMBER	QTY	LINE	SERIES	BODY	ENGINE	TRANS	TRIM	DESCRIPTION
	05122369AA	1	2, 6	L	01, 02, 06				
		1	2, 6	L	11, 12, 14, 15, 16				
		1	2, 6	L	51, 52, 54, 55, 56				
		1	3, 7	L	12, 15, 16				
7									BRACKET, Instrument Panel
	05122390AA	1	2, 6	L	01, 02, 06		DGJ		
		1	2, 6	L	11, 12, 14, 15, 16		DGJ		
		1	2, 6	L	51, 52, 54, 55, 56		DGJ		
		1	3, 7	L	12, 15, 16		DGJ		
8									SCREW
	05104663AA	2	2, 6	L	01, 02, 06	EX9			
		4	2, 6	L	11, 12, 14, 15, 16		DGJ		
		2	2, 6	L	11, 12, 14, 15, 16	EX9			
		4	2, 6	L	51, 52, 54, 55, 56		DGJ		
		2	2, 6	L	51, 52, 54, 55, 56	EX9			
		4	3, 7	L	12, 15, 16		DGJ		
		2	3, 7	L	12, 15, 16	EX9			
9									BEZEL, Instrument Panel
	05104268AA	1	2, 6	L	01, 02, 06				
		1	2, 6	L	11, 12, 14, 15, 16				
		1	2, 6	L	51, 52, 54, 55, 56				
		1	3, 7	L	12, 15, 16				
10									BRACKET, Instrument Panel

SPRINTER (VA)

SERIES	LINE	BODY	ENGINE	TRANSMISSION
L = LOWLINE	3 = HD DODGE 2WD 6 = Lt. Duty DODGE 4WD 2 = Med. Duty DODGE 2WD 7 = Med. Duty DODGE 4WD	55 = Wagon 140" 54 = Wagon 118" 52 = Wagon 140" 51 = Wagon 118" 12 = Van 140" 11 = Van 118" 06 = Front Section 158" 14 = Van 118" 15 = Van 140" 16 = Van 158" 56 = Wagon 158" 01 = Chassis Forward Control 118" 02 = Chassis Forward Control 140"	EX8 = Engine-2.7L I5 Mercedes Turbo Diesel	DGJ = Transmission-5-Spd. Automatic,W5A580

Instrument Panel Cover and Related Parts
Figure 08A-120

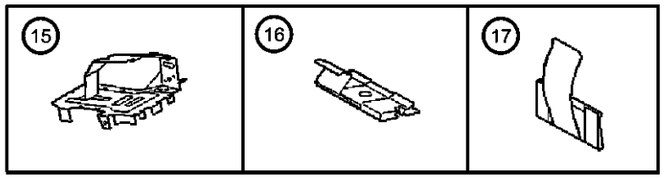

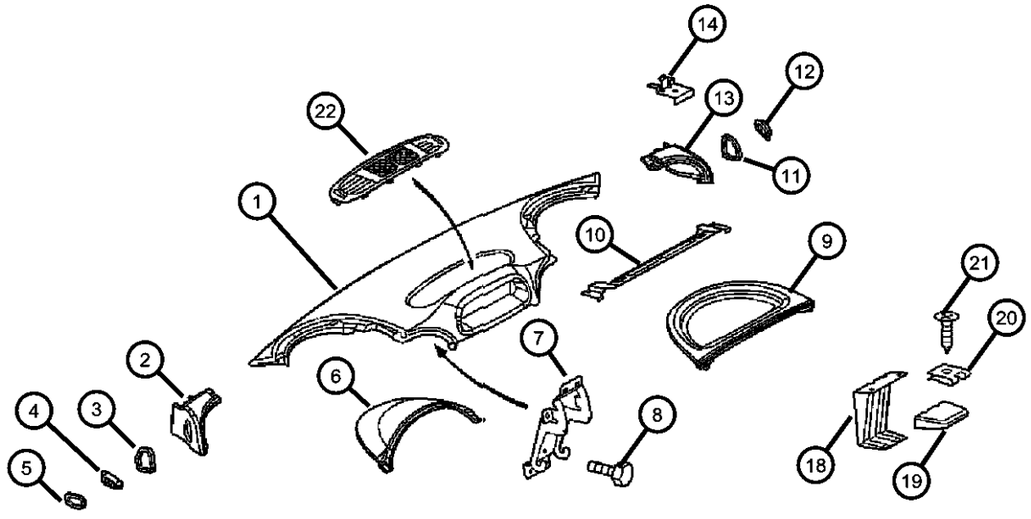

ITEM	PART NUMBER	QTY	LINE	SERIES	BODY	ENGINE	TRANS	TRIM	DESCRIPTION
	05122906AA	1	2, 6	L	01, 02, 06				
		1	2, 6	L	11, 12, 14, 15, 16				
		1	2, 6	L	51, 52, 54, 55, 56				
		1	3, 7	L	12, 15, 16				
11									SEAL
	05124785AA	1	2, 6	L	01, 02, 06				
		1	2, 6	L	11, 12, 14, 15, 16				
		1	2, 6	L	51, 52, 54, 55, 56				
		1	3, 7	L	12, 15, 16				
12									GRILLE, Demister
	05124911AA	1	2, 6	L	01, 02, 06				
		1	2, 6	L	11, 12, 14, 15, 16				
		1	2, 6	L	51, 52, 54, 55, 56				
		1	3, 7	L	12, 15, 16				
13									HOUSING, Air Outlet
	05122877AA	1	2, 6	L	01, 02, 06				
		1	2, 6	L	11, 12, 14, 15, 16				
		1	3, 7	L	12, 15, 16				
14									BRACKET, Instrument Panel
	05122889AA	2	2, 6	L	01, 02, 06				
		2	2, 6	L	11, 12, 14, 15, 16				
		2	2, 6	L	51, 52, 54, 55, 56				
		2	3, 7	L	12, 15, 16				
15									BRACKET, Instrument Panel

SPRINTER (VA)

SERIES	LINE	BODY	ENGINE	TRANSMISSION
L = LOWLINE	3 = HD DODGE 2WD 6 = Lt. Duty DODGE 4WD 2 = Med. Duty DODGE 2WD 7 = Med. Duty DODGE 4WD	55 = Wagon 140" 54 = Wagon 118" 52 = Wagon 140" 51 = Wagon 118" 12 = Van 140" 11 = Van 118" 06 = Front Section 158" 14 = Van 118" 15 = Van 140" 16 = Van 158" 56 = Wagon 158" 01 = Chassis Forward Control 118" 02 = Chassis Forward Control 140"	EX8 = Engine-2.7L I5 Mercedes Turbo Diesel	DGJ = Transmission-5-Spd. Automatic,W5A580

Instrument Panel Cover and Related Parts
Figure 08A-120

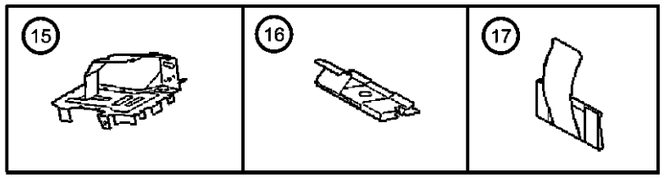

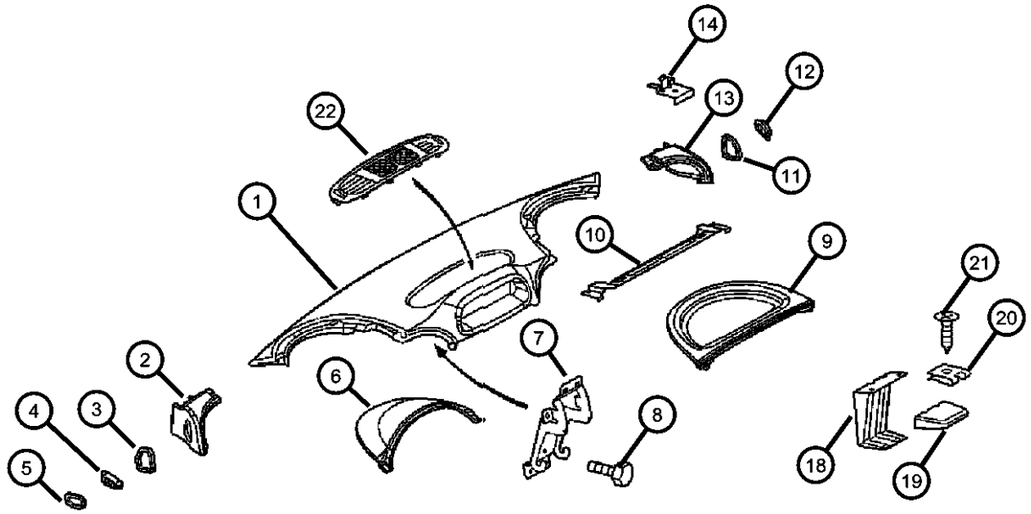

ITEM	PART NUMBER	QTY	LINE	SERIES	BODY	ENGINE	TRANS	TRIM	DESCRIPTION
	05122388AA	1	2, 6	L	01, 02, 06				
		1	2, 6	L	11, 12, 14, 15, 16				
		1	2, 6	L	51, 52, 54, 55, 56				
		1	3, 7	L	12, 15, 16				
16									CLIP, Bracket
	05125589AA	2	2, 6	L	01, 02, 06				
		2	2, 6	L	11, 12, 14, 15, 16				
		2	2, 6	L	51, 52, 54, 55, 56				
		2	3, 7	L	12, 15, 16				
17									CLIP, Spring
	05125590AA	1	2, 6	L	01, 02, 06				
		1	2, 6	L	11, 12, 14, 15, 16				
		1	2, 6	L	51, 52, 54, 55, 56				
		1	3, 7	L	12, 15, 16				
18									BRACKET, Instrument Panel
	05122890AA	1	2, 6	L	11, 12, 14, 15, 16				
		1	2, 6	L	51, 52, 54, 55, 56				
		1	3, 7	L	12, 15, 16				
19									PAD, Console
	05122942AA	1	2, 6	L	01, 02, 06				
		1	2, 6	L	11, 12, 14, 15, 16				
		1	2, 6	L	51, 52, 54, 55, 56				
		1	3, 7	L	12, 15, 16				

SPRINTER (VA)

SERIES	LINE	BODY	ENGINE	TRANSMISSION
L = LOWLINE	3 = HD DODGE 2WD 6 = Lt. Duty DODGE 4WD 2 = Med. Duty DODGE 2WD 7 = Med. Duty DODGE 4WD	55 = Wagon 140" 54 = Wagon 118" 52 = Wagon 140" 51 = Wagon 118" 12 = Van 140" 11 = Van 118" 06 = Front Section 158" 14 = Van 118" 15 = Van 140" 16 = Van 158" 56 = Wagon 158" 01 = Chassis Forward Control 118" 02 = Chassis Forward Control 140"	EX8 = Engine-2.7L I5 Mercedes Turbo Diesel	DGJ = Transmission-5-Spd. Automatic,W5A580

AR = use ase required - = Non illustrrated part

Instrument Panel Cover and Related Parts
Figure 08A-120

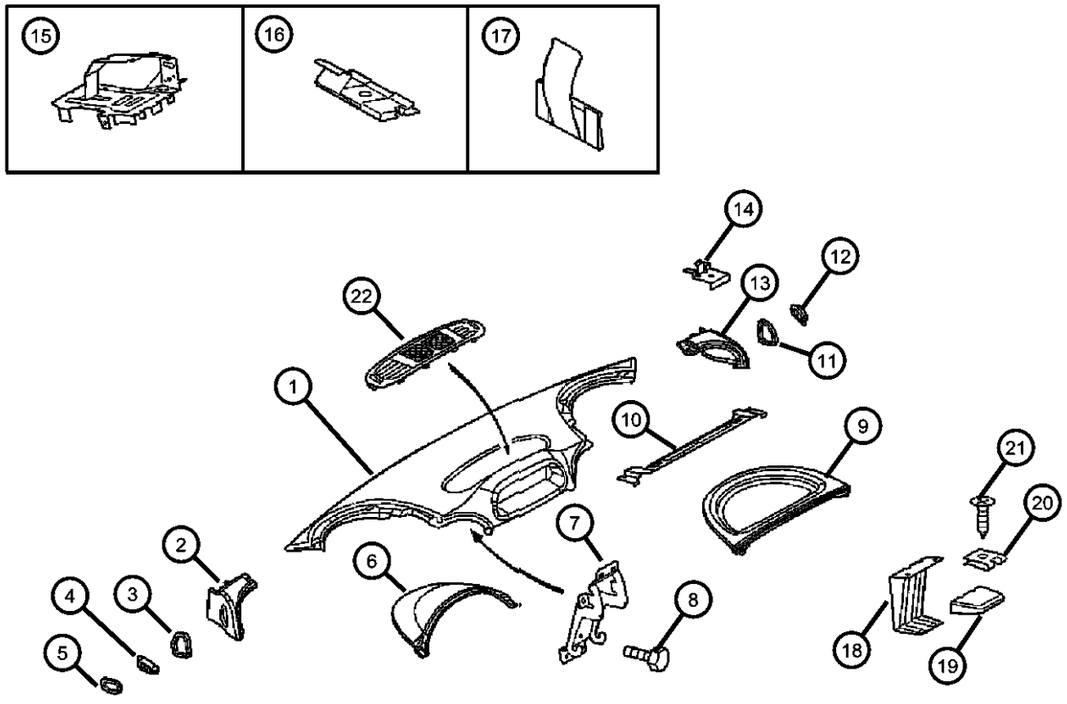

ITEM	PART NUMBER	QTY	LINE	SERIES	BODY	ENGINE	TRANS	TRIM	DESCRIPTION
20									NUT, Clip-On
	05125867AA	2	2, 6	L	01, 02, 06				
		2	2, 6	L	11, 12, 14, 15, 16				
		2	2, 6	L	51, 52, 54, 55, 56				
		2	3, 7	L	12, 15, 16				
21									SCREW
	06104610AA	1	2, 6	L	11, 12, 14, 15, 16				
		1	2, 6	L	51, 52, 54, 55, 56				
		1	3, 7	L	12, 15, 16				
22									GRILLE, Defroster
	05104271AA	1	2, 6	L	11, 12, 14, 15, 16				
		1	2, 6	L	51, 52, 54, 55, 56				
		1	3, 7	L	12, 15, 16				

SPRINTER (VA)

SERIES	LINE	BODY	ENGINE	TRANSMISSION
L = LOWLINE	3 = HD DODGE 2WD 6 = Lt. Duty DODGE 4WD 2 = Med. Duty DODGE 2WD 7 = Med. Duty DODGE 4WD	55 = Wagon 140" 54 = Wagon 118" 52 = Wagon 140" 51 = Wagon 118" 12 = Van 140" 11 = Van 118" 06 = Front Section 158" 14 = Van 118" 15 = Van 140" 16 = Van 158" 56 = Wagon 158" 01 = Chassis Forward Control 118" 02 = Chassis Forward Control 140"	EX8 = Engine-2.7L I5 Mercedes Turbo Diesel	DGJ = Transmission-5-Spd. Automatic,W5A580

AR = use ase required - = Non illustrrated part

Instrument Panel Reinforcement
Figure 08A-125

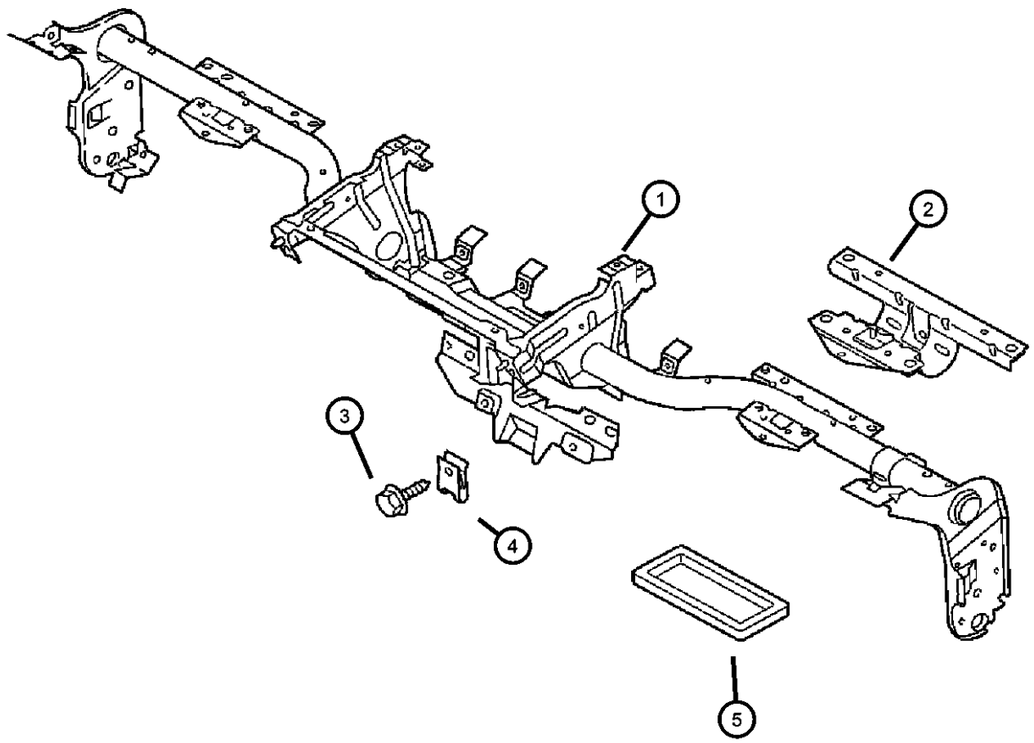

ITEM	PART NUMBER	QTY	LINE	SERIES	BODY	ENGINE	TRANS	TRIM	DESCRIPTION
1									FRAME, Instrument Panel
	05133470AA	1	2, 6	L	01, 02, 06				
		1	2, 6	L	11, 12, 14, 15, 16				
		1	2, 6	L	51, 52, 54, 55, 56				
		1	3, 7	L	12, 15, 16				
2									SUPPORT, Instrument Panel
	05122400AA	1	2, 6	L	01, 02, 06				
		1	2, 6	L	11, 12, 14, 15, 16				
		1	2, 6	L	51, 52, 54, 55, 56				
		1	3, 7	L	12, 15, 16				
3									SCREW
	06104605AA	6	2, 6	L	01, 02, 06				
		6	2, 6	L	11, 12, 14, 15, 16				
		6	2, 6	L	51, 52, 54, 55, 56				
		6	3, 7	L	12, 15, 16				
4									NUT, Clip-On
	05125855AA	6	2, 6	L	01, 02, 06				
	05125855AB	6	2, 6	L	11, 12, 14, 15, 16				
		6	2, 6	L	51, 52, 54, 55, 56				
		6	3, 7	L	12, 15, 16				
5									SEAL
	05124783AA	2	2, 6	L	01, 02, 06				
		2	2, 6	L	11, 12, 14, 15, 16				

SPRINTER (VA)

SERIES	LINE	BODY	ENGINE	TRANSMISSION
L = LOWLINE	3 = HD DODGE 2WD 6 = Lt. Duty DODGE 4WD 2 = Med. Duty DODGE 2WD 7 = Med. Duty DODGE 4WD	55 = Wagon 140" 54 = Wagon 118" 52 = Wagon 140" 51 = Wagon 118" 12 = Van 140" 11 = Van 118" 06 = Front Section 158" 14 = Van 118" 15 = Van 140" 16 = Van 158" 56 = Wagon 158" 01 = Chassis Forward Control 118" 02 = Chassis Forward Control 140"	EX8 = Engine-2.7L I5 Mercedes Turbo Diesel	DGJ = Transmission-5-Spd. Automatic,W5A580

AR = use ase required - = Non illustrrated part

Instrument Panel Reinforcement
Figure 08A-125

ITEM	PART NUMBER	QTY	LINE	SERIES	BODY	ENGINE	TRANS	TRIM	DESCRIPTION
		2	2, 6	L	51, 52, 54, 55, 56				
		2	3, 7	L	12, 15, 16				

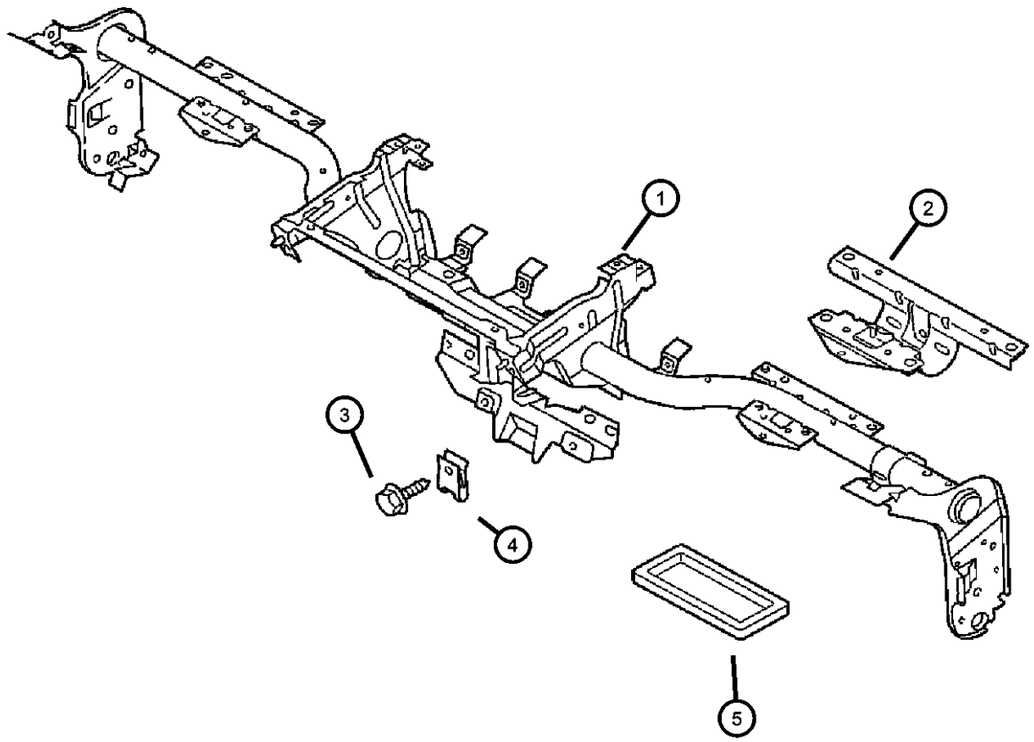

SPRINTER (VA)

SERIES	LINE	BODY	ENGINE	TRANSMISSION
L = LOWLINE	3 = HD DODGE 2WD 6 = Lt. Duty DODGE 4WD 2 = Med. Duty DODGE 2WD 7 = Med. Duty DODGE 4WD	55 = Wagon 140" 54 = Wagon 118" 52 = Wagon 140" 51 = Wagon 118" 12 = Van 140" 11 = Van 118" 06 = Front Section 158" 14 = Van 118" 15 = Van 140" 16 = Van 158" 56 = Wagon 158" 01 = Chassis Forward Control 118" 02 = Chassis Forward Control 140"	EX8 = Engine-2.7L I5 Mercedes Turbo Diesel	DGJ = Transmission-5-Spd. Automatic,W5A580

AR = use ase required - = Non illustrrated part

Instrument Panel Cluster
Figure 08A-205

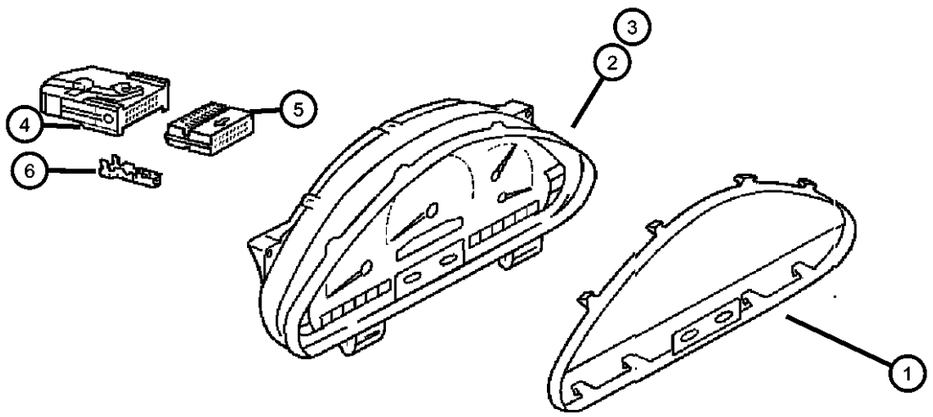

ITEM	PART NUMBER	QTY	LINE	SERIES	BODY	ENGINE	TRANS	TRIM	DESCRIPTION
1									LENS, Cluster
	05103657AA	1	2, 6	L	01, 02, 06				
		1	2, 6	L	11, 12, 14, 15, 16				
		1	2, 6	L	51, 52, 54, 55, 56				
		1	3, 7	L	12, 15, 16				
2									CLUSTER
	05119415AA	1	2, 6	L	01, 02, 06				
		1	2, 6	L	11, 12, 14, 15, 16				
		1	2, 6	L	51, 52, 54, 55, 56				
		1	3, 7	L	02, 06				
		1	3, 7	L	12, 15, 16				
3									CLUSTER, Instrument Panel
	05133410AA	1	2	L	01, 02, 06				
		1	2	L	11, 12, 14, 15, 16				
		1	2	L	51, 52, 54, 55, 56				
		1	3	L	02, 06				
		1	3	L	12, 15, 16				
	05133411AA	1	2, 6	L	01, 02, 06				[3SL]+4XS
		1	2, 6	L	11, 12, 14, 15, 16				[3SL]+4XS
		1	2, 6	L	51, 52, 54, 55, 56				[3SL]+4XS
		1	3, 7	L	02, 06				[3SL]+4XS
		1	3, 7	L	12, 15, 16				[3SL]+4XS
4									CONNECTOR, Wiring
	05103662AA	1	2, 6	L	01, 02, 06				
		1	2, 6	L	11, 12, 14, 15, 16				

SPRINTER (VA)

SERIES	LINE	BODY	ENGINE	TRANSMISSION
L = LOWLINE	3 = HD DODGE 2WD 6 = Lt. Duty DODGE 4WD 2 = Med. Duty DODGE 2WD 7 = Med. Duty DODGE 4WD	55 = Wagon 140" 54 = Wagon 118" 52 = Wagon 140" 51 = Wagon 118" 12 = Van 140" 11 = Van 118" 06 = Front Section 158" 14 = Van 118" 15 = Van 140" 16 = Van 158" 56 = Wagon 158" 01 = Chassis Forward Control 118" 02 = Chassis Forward Control 140"	EX8 = Engine-2.7L I5 Mercedes Turbo Diesel	DGJ = Transmission-5-Spd. Automatic,W5A580

Instrument Panel Cluster
Figure 08A-205

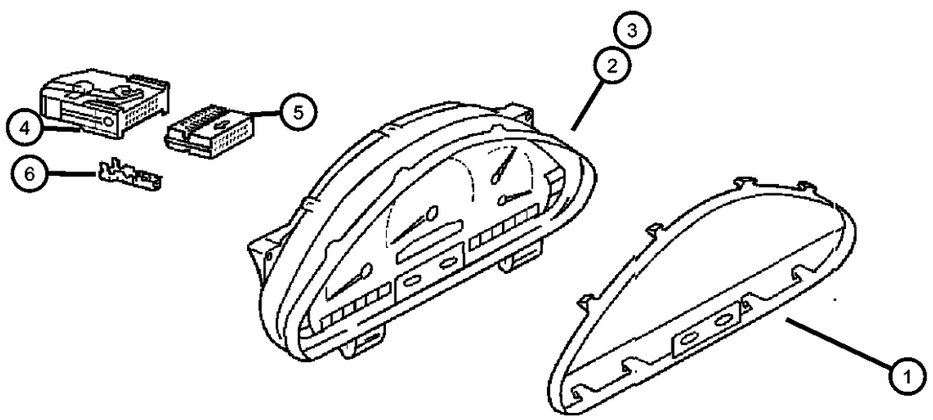

ITEM	PART NUMBER	QTY	LINE	SERIES	BODY	ENGINE	TRANS	TRIM	DESCRIPTION
		1	2, 6	L	51, 52, 54, 55, 56				
		1	3, 7	L	12, 15, 16				
5									CONNECTOR
	05103750AA	1	2, 6	L	01, 02, 06				
		1	2, 6	L	11, 12, 14, 15, 16				
		1	2, 6	L	51, 52, 54, 55, 56				
		1	3, 7	L	12, 15, 16				
6									TERMINAL
	05103873AA	99	2, 6	L	01, 02, 06				
		99	2, 6	L	11, 12, 14, 15, 16				
		99	2, 6	L	51, 52, 54, 55, 56				
		99	3, 7	L	12, 15, 16				

SPRINTER (VA)

SERIES	LINE	BODY	ENGINE	TRANSMISSION
L = LOWLINE	3 = HD DODGE 2WD 6 = Lt. Duty DODGE 4WD 2 = Med. Duty DODGE 2WD 7 = Med. Duty DODGE 4WD	55 = Wagon 140" 54 = Wagon 118" 52 = Wagon 140" 51 = Wagon 118" 12 = Van 140" 11 = Van 118" 06 = Front Section 158" 14 = Van 118" 15 = Van 140" 16 = Van 158" 56 = Wagon 158" 01 = Chassis Forward Control 118" 02 = Chassis Forward Control 140"	EX8 = Engine-2.7L I5 Mercedes Turbo Diesel	DGJ = Transmission-5-Spd. Automatic,W5A580

Radio
Figure 08A-305

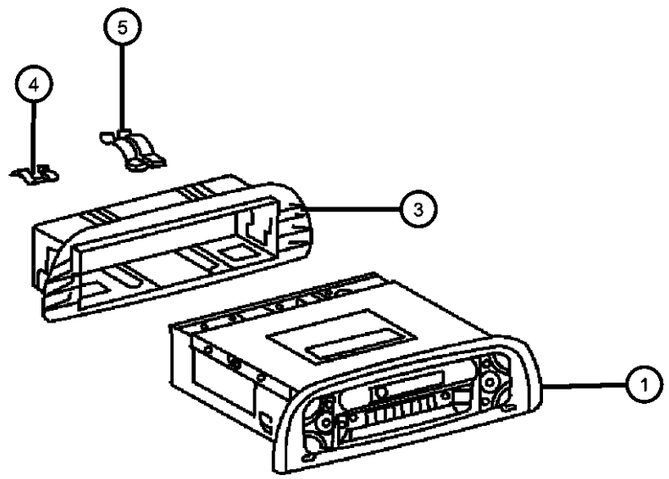

ITEM	PART NUMBER	QTY	LINE	SERIES	BODY	ENGINE	TRANS	TRIM	DESCRIPTION
1									RADIO
	05103832AA	1	2, 6	L	11, 12, 14, 15, 16				[RBE]
		1	2, 6	L	51, 52, 54, 55, 56				[RBE]
		1	3, 7	L	02, 06				[RBE]
		1	3, 7	L	12, 15, 16				[RBE]
-2									RADIO
	05103831AA	1	2, 6	L	01, 02, 06				[RAF]
		1	2, 6	L	11, 12, 14, 15, 16				[RAF]
		1	3, 7	L	12, 15, 16				[RAF]
	05139880AA	1	2, 6	L	11, 12, 14, 15, 16				[RAF,4XS]
		1	2, 6	L	51, 52, 54, 55, 56				[RAF]
		1	3, 7	L	02, 06				[RAF]
		1	2, 6	L	51, 52, 54, 55, 56				[RAF,4XS]
		1	3, 7	L	12, 15, 16				[RAF,4XS]
3									BEZEL, Instrument Panel, Radio Housing
	05122939AA	1	3, 7	L	12, 15, 16				
		1	2, 6	L	01, 02, 06				
		1	2, 6	L	11, 12, 14, 15, 16				
		1	2, 6	L	51, 52, 54, 55, 56				
		1	3, 7	L	02, 06				
4	05124612AA	2	3, 7	L	15, 16, 12				CLIP, Spring
5	05124613AA	2	3, 7	L	12, 15, 16				CLIP, Spring
-6									WIRING, Radio
	05135191AA	1	2, 6	L	16				FEDEX [Power Cable]
	05135194AA	1	2, 6	L	16				FEDEX [Radio to Battery]

SPRINTER (VA)

SERIES	LINE	BODY	ENGINE	TRANSMISSION
L = LOWLINE	3 = HD DODGE 2WD 6 = Lt. Duty DODGE 4WD 2 = Med. Duty DODGE 2WD 7 = Med. Duty DODGE 4WD	55 = Wagon 140" 54 = Wagon 118" 52 = Wagon 140" 51 = Wagon 118" 12 = Van 140" 11 = Van 118" 06 = Front Section 158" 14 = Van 118" 15 = Van 140" 16 = Van 158" 56 = Wagon 158" 01 = Chassis Forward Control 118" 02 = Chassis Forward Control 140"	EX8 = Engine-2.7L I5 Mercedes Turbo Diesel	DGJ = Transmission-5-Spd. Automatic,W5A580

Antenna
Figure 08A-310

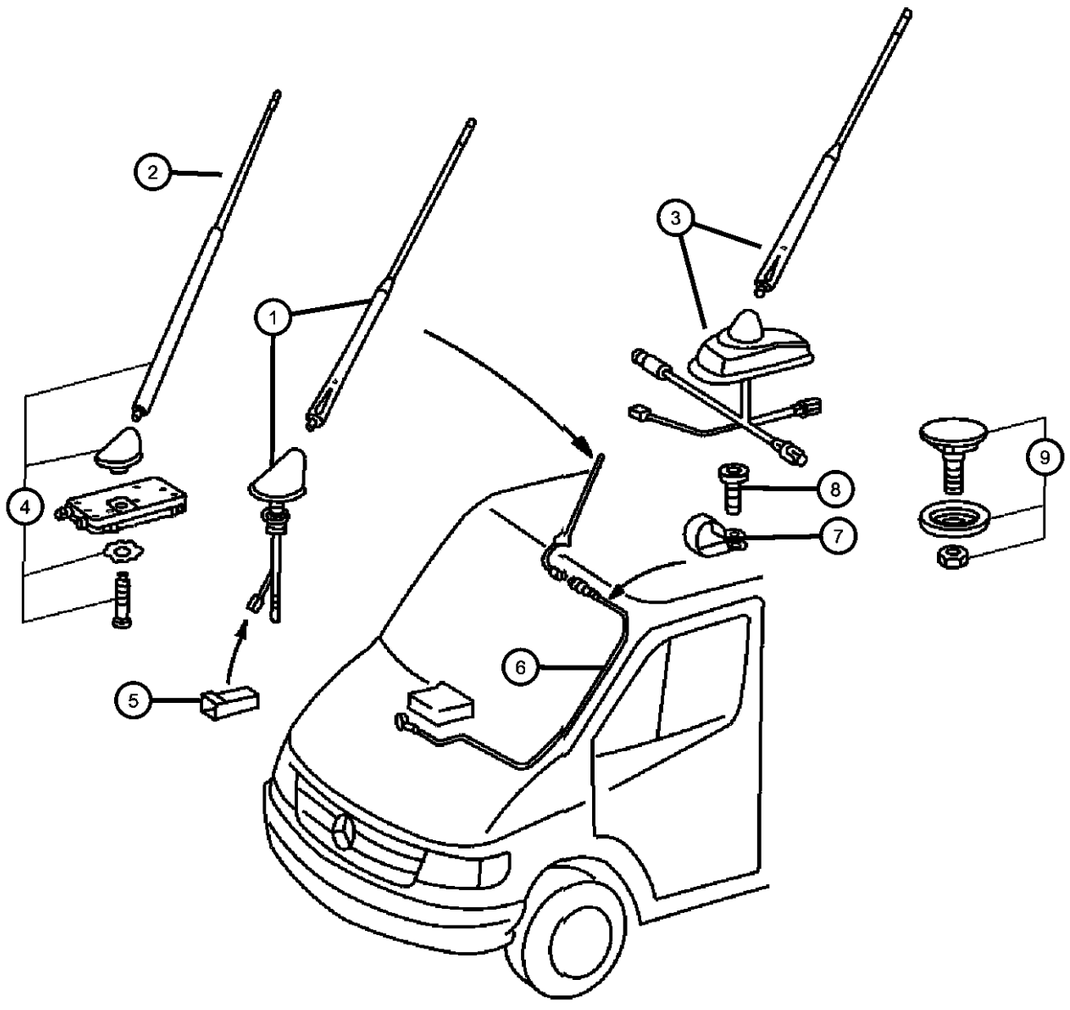

ITEM	PART NUMBER	QTY	LINE	SERIES	BODY	ENGINE	TRANS	TRIM	DESCRIPTION
1									ANTENNA
	05124563AA	1	2, 6	L	11, 12, 14, 15, 16				
		1	2, 6	L	51, 52, 54, 55, 56				
		1	3, 7	L	12, 15, 16				
2									ANTENNA
	05124561AA	1	2, 6	L	11, 12, 14, 15, 16				
		1	2, 6	L	51, 52, 54, 55, 56				
		1	3, 7	L	02, 06				
		1	2, 6	L	01, 02, 06				
		1	3, 7	L	12, 15, 16				
3									ANTENNA
	05124561AA	1	2, 6	L	01, 02, 06				
		1	2, 6	L	11, 12, 14, 15, 16				
		1	2, 6	L	51, 52, 54, 55, 56				
		1	3, 7	L	12, 15, 16				
4									ANTENNA
	05133980AA	1	2, 6	L	01, 02, 06				
		1	2, 6	L	11, 12, 14, 15, 16				
		1	2, 6	L	52, 54, 55, 56, 51				
		1	3, 7	L	12, 15, 16				
5									CONNECTOR
	05120596AA	2	3, 7	L	12, 15, 16				
	05120604AA	1	2, 6	L	01, 02, 06				
		1	2, 6	L	51, 52, 54, 55, 56				

SPRINTER (VA)

SERIES	LINE	BODY	ENGINE	TRANSMISSION
L = LOWLINE	3 = HD DODGE 2WD 6 = Lt. Duty DODGE 4WD 2 = Med. Duty DODGE 2WD 7 = Med. Duty DODGE 4WD	55 = Wagon 140" 54 = Wagon 118" 52 = Wagon 140" 51 = Wagon 118" 12 = Van 140" 11 = Van 118" 06 = Front Section 158" 14 = Van 118" 15 = Van 140" 16 = Van 158" 56 = Wagon 158" 01 = Chassis Forward Control 118" 02 = Chassis Forward Control 140"	EX8 = Engine-2.7L I5 Mercedes Turbo Diesel	DGJ = Transmission-5-Spd. Automatic,W5A580

Antenna
Figure 08A-310

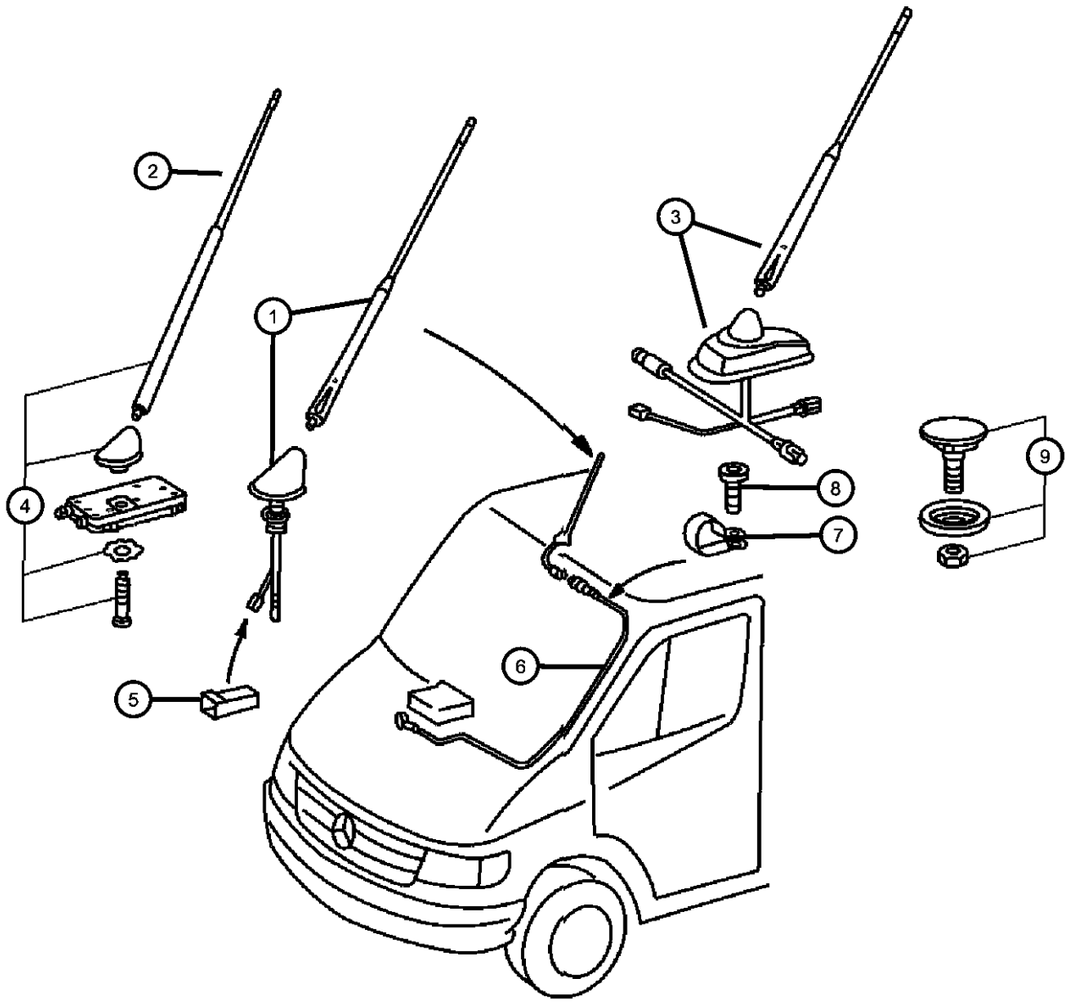

ITEM	PART NUMBER	QTY	LINE	SERIES	BODY	ENGINE	TRANS	TRIM	DESCRIPTION
		2	6, 2	L	11, 12, 14, 15, 16				
6									CABLE, Antenna
	05124611AA	1	2, 6	L	01, 02, 06				
		1	2, 6	L	11, 12, 14, 15, 16				
		1	2, 6	L	51, 52, 54, 55, 56				
		1	3, 7	L	12, 15, 16				
7									CLAMP, Mounting
	05125874AA	1	2, 6	L	11, 12, 14, 15, 16				
		1	2, 6	L	51, 52, 54, 55, 56				
		1	3, 7	L	12, 15, 16				
		1	2, 6	L	01, 02, 06				
8									SCREW
	06104504AA	1	2, 6	L	01, 02, 06				
		1	3, 7	L	12, 15, 16				
		1	2, 6	L	11, 12, 14, 15, 16				
		1	2, 6	L	51, 52, 54, 55, 56				
9									PANEL
	05124422AA	1	2, 6	L	01, 02, 06				
		1	2, 6	L	11, 12, 14, 15, 16				
		1	2, 6	L	51, 52, 54, 55, 56				
		1	3, 7	L	12, 15, 16				

SPRINTER (VA)

SERIES	LINE	BODY	ENGINE	TRANSMISSION
L = LOWLINE	3 = HD DODGE 2WD 6 = Lt. Duty DODGE 4WD 2 = Med. Duty DODGE 2WD 7 = Med. Duty DODGE 4WD	55 = Wagon 140" 54 = Wagon 118" 52 = Wagon 140" 51 = Wagon 118" 12 = Van 140" 11 = Van 118" 06 = Front Section 158" 14 = Van 118" 15 = Van 140" 16 = Van 158" 56 = Wagon 158" 01 = Chassis Forward Control 118" 02 = Chassis Forward Control 140"	EX8 = Engine-2.7L I5 Mercedes Turbo Diesel	DGJ = Transmission-5-Spd. Automatic,W5A580

Speakers
Figure 08A-315

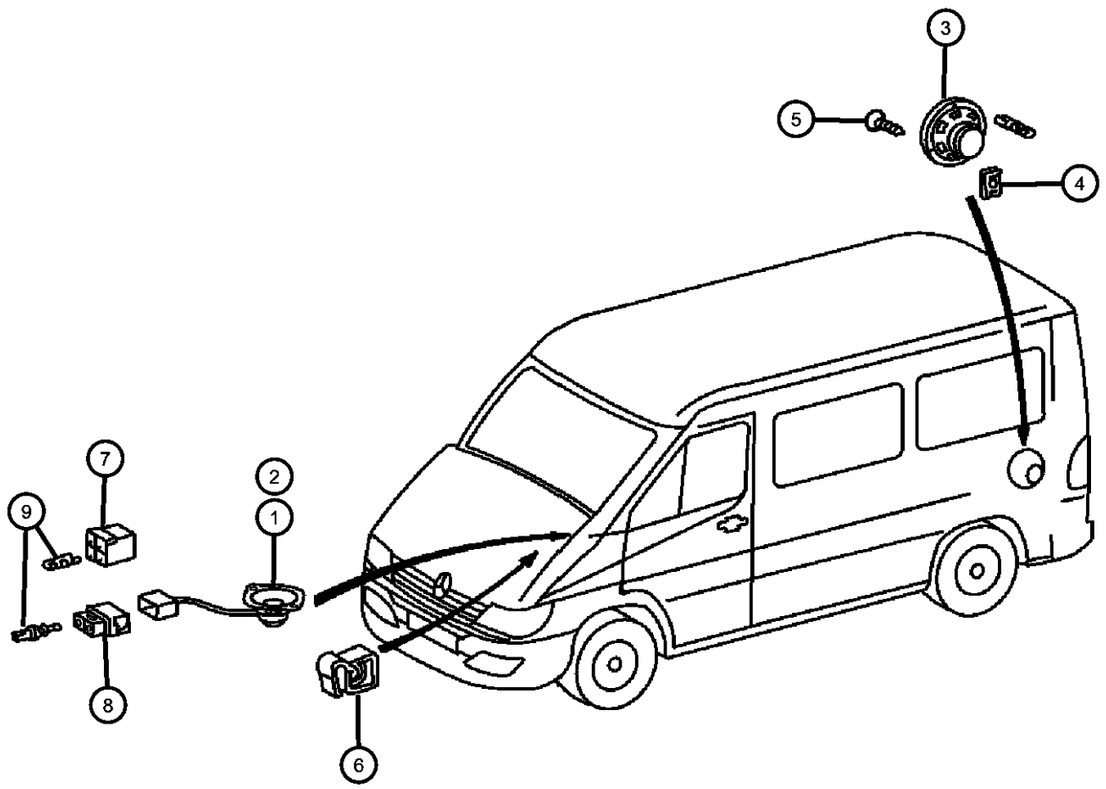

ITEM	PART NUMBER	QTY	LINE	SERIES	BODY	ENGINE	TRANS	TRIM	DESCRIPTION
1									SPEAKER, Front
	05103762AA	1	2, 6	L	51, 52, 54, 55, 56				
		1	3, 7	L	12, 15, 16				
		2	2, 6	L	11, 12, 14, 15, 16				
2									SPEAKER
	05124409AA	1	2, 6	L	14, 15, 16, 11, 12				Used With Hands Free Phone System
		1	2, 6	L	51, 52, 54, 55, 56				Used With Hands Free Phone System
		1	3, 7	L	12, 15, 16				Used With Hands Free Phone System
3									SPEAKER, Rear
	05124619AA	2	2, 6	L	11, 12, 14, 15, 16				
		2	2, 6	L	51, 52, 54, 55, 56				
		2	3, 7	L	12, 15, 16				
4									NUT, Clip-On
	05125853AA	8	2, 6	L	11, 12, 14, 15, 16				
		8	2, 6	L	51, 52, 54, 55, 56				
		8	3, 7	L	12, 15, 16				
5									SCREW, Tapping
	06104615AA	4	2, 6	L	01, 02, 06				
		4	2, 6	L	11, 12, 14, 15, 16				
		4	2, 6	L	51, 52, 54, 55, 56				
		4	3, 7	L	12, 15, 16				
6									RETAINER, Wiring Harness
	05126041AA	99	2, 6	L	11, 12, 14, 15, 16				

SPRINTER (VA)

SERIES	LINE	BODY	ENGINE	TRANSMISSION
L = LOWLINE	3 = HD DODGE 2WD 6 = Lt. Duty DODGE 4WD 2 = Med. Duty DODGE 2WD 7 = Med. Duty DODGE 4WD	55 = Wagon 140" 54 = Wagon 118" 52 = Wagon 140" 51 = Wagon 118" 12 = Van 140" 11 = Van 118" 06 = Front Section 158" 14 = Van 118" 15 = Van 140" 16 = Van 158" 56 = Wagon 158" 01 = Chassis Forward Control 118" 02 = Chassis Forward Control 140"	EX8 = Engine-2.7L I5 Mercedes Turbo Diesel	DGJ = Transmission-5-Spd. Automatic,W5A580

Speakers
Figure 08A-315

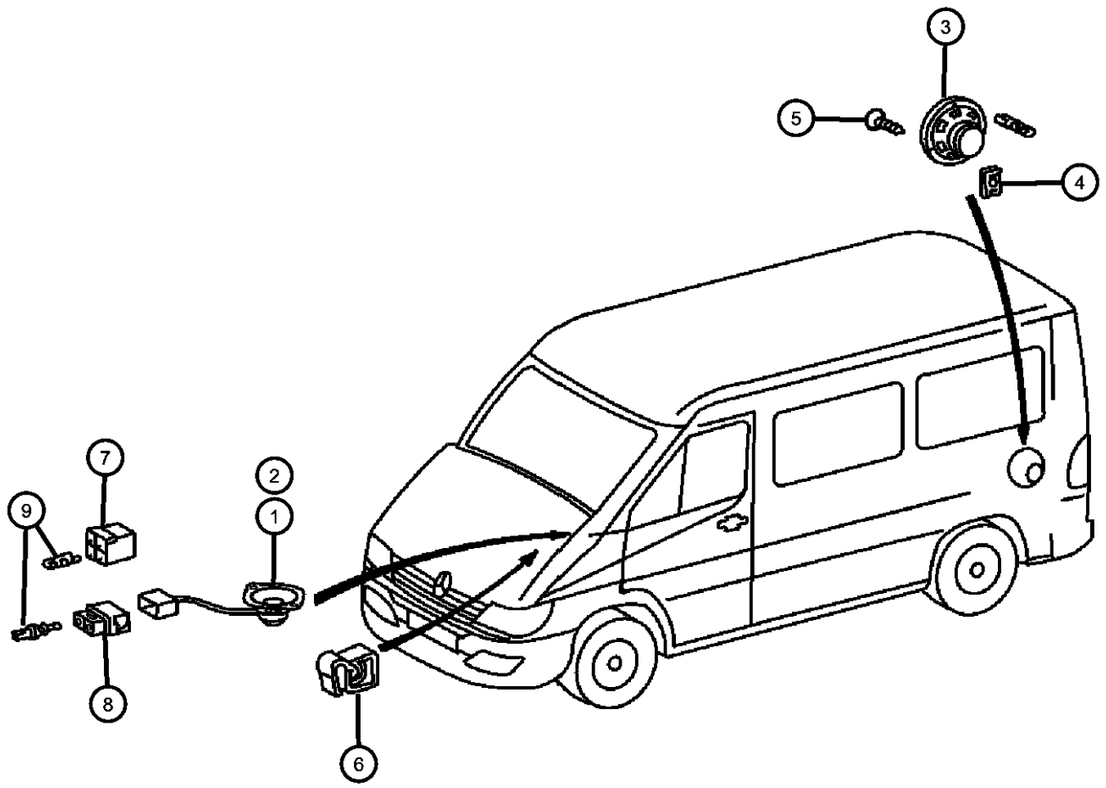

ITEM	PART NUMBER	QTY	LINE	SERIES	BODY	ENGINE	TRANS	TRIM	DESCRIPTION
		99	2, 6	L	51, 52, 54, 55, 56				
		99	3, 7	L	12, 15, 16				
		99	2, 6	L	01, 02, 06				
7									CONNECTOR
	05103753AA	1	2, 6	L	11, 12, 14, 15, 16				
		1	2, 6	L	51, 52, 54, 55, 56				
		1	3, 7	L	12, 15, 16				
8									CONNECTOR
	05120694AA	1	3, 7	L	12, 15, 16				
		1	2, 6	L	11, 12, 14, 15, 16				
		1	2, 6	L	51, 52, 54, 55, 56				
9									TERMINAL
	05103828AA	1	2, 6	L	11, 12, 14, 15, 16				
		1	2, 6	L	51, 52, 54, 55, 56				
		1	3, 7	L	12, 15, 16				

SPRINTER (VA)

SERIES	LINE	BODY	ENGINE	TRANSMISSION
L = LOWLINE	3 = HD DODGE 2WD 6 = Lt. Duty DODGE 4WD 2 = Med. Duty DODGE 2WD 7 = Med. Duty DODGE 4WD	55 = Wagon 140" 54 = Wagon 118" 52 = Wagon 140" 51 = Wagon 118" 12 = Van 140" 11 = Van 118" 06 = Front Section 158" 14 = Van 118" 15 = Van 140" 16 = Van 158" 56 = Wagon 158" 01 = Chassis Forward Control 118" 02 = Chassis Forward Control 140"	EX8 = Engine-2.7L I5 Mercedes Turbo Diesel	DGJ = Transmission-5-Spd. Automatic,W5A580

Console Cup Holder
Figure 08A-405

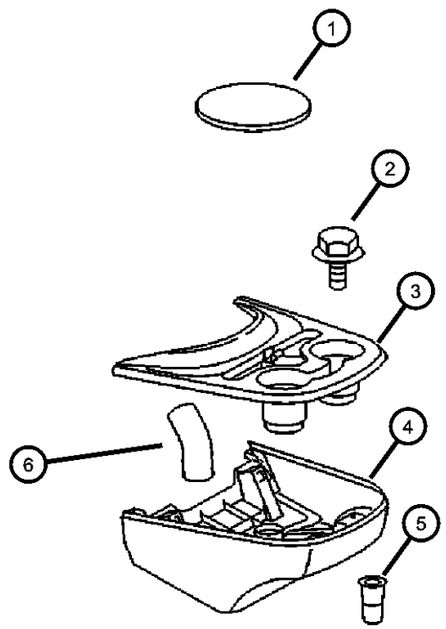

ITEM	PART NUMBER	QTY	LINE	SERIES	BODY	ENGINE	TRANS	TRIM	DESCRIPTION
1									MAT, Single Cup
	05122953AA	2	2, 6	L	01, 02, 06				
		2	2, 6	L	11, 12, 14, 15, 16				
		2	2, 6	L	51, 52, 54, 55, 56				
		2	3, 7	L	12, 15, 16				
2									SCREW, Hex Flange Head
	06104121AA	4	2, 6	L	11, 12, 14, 15, 16				
		4	2, 6	L	51, 52, 54, 55, 56				
		4	2, 6	L	01, 02, 06				
		4	3, 7	L	12, 15, 16				
3									CUP HOLDER, Lid
	05104254AA	1	2, 6	L	01, 02, 06				
		1	2, 6	L	11, 12, 14, 15, 16				
		1	2, 6	L	51, 52, 54, 55, 56				
		1	3, 7	L	12, 15, 16				
4									HOUSING, Cup Holder
	05104255AA	1	2, 6	L	01, 02, 06				
		1	2, 6	L	14, 15, 16, 11, 12				
		1	2, 6	L	51, 52, 54, 55, 56				
		1	3, 7	L	12, 15, 16				
5									NUT, Rivet
	05133975AA	4	2, 6	L	11, 12, 14, 15, 16				
		4	2, 6	L	51, 52, 54, 55, 56				
		4	3, 7	L	12, 15, 16				

SPRINTER (VA)

SERIES	LINE	BODY	ENGINE	TRANSMISSION
L = LOWLINE	3 = HD DODGE 2WD 6 = Lt. Duty DODGE 4WD 2 = Med. Duty DODGE 2WD 7 = Med. Duty DODGE 4WD	55 = Wagon 140" 54 = Wagon 118" 52 = Wagon 140" 51 = Wagon 118" 12 = Van 140" 11 = Van 118" 06 = Front Section 158" 14 = Van 118" 15 = Van 140" 16 = Van 158" 56 = Wagon 158" 01 = Chassis Forward Control 118" 02 = Chassis Forward Control 140"	EX8 = Engine-2.7L I5 Mercedes Turbo Diesel	DGJ = Transmission-5-Spd. Automatic,W5A580

AR = use ase required - = Non illustrrated part

Console Cup Holder
Figure 08A-405

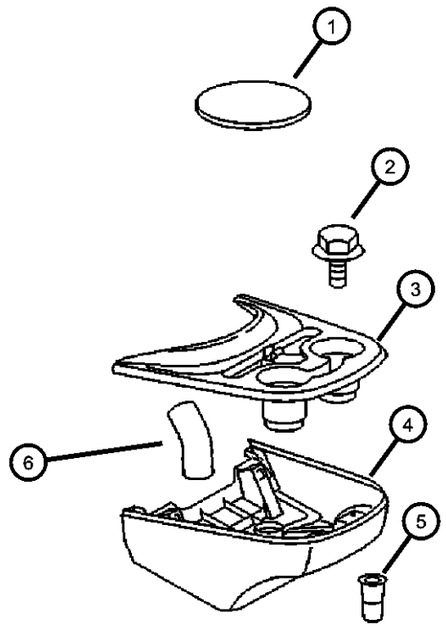

ITEM	PART NUMBER	QTY	LINE	SERIES	BODY	ENGINE	TRANS	TRIM	DESCRIPTION
		4	2, 6	L	01, 02, 06				
6									HOSE
	05104488AA	1	2, 6	L	01, 02, 06				
		1	2, 6	L	11, 12, 14, 15, 16				
		1	2, 6	L	51, 52, 54, 55, 56				
		1	3, 7	L	12, 15, 16				

SPRINTER (VA)

SERIES	LINE	BODY	ENGINE	TRANSMISSION
L = LOWLINE	3 = HD DODGE 2WD 6 = Lt. Duty DODGE 4WD 2 = Med. Duty DODGE 2WD 7 = Med. Duty DODGE 4WD	55 = Wagon 140" 54 = Wagon 118" 52 = Wagon 140" 51 = Wagon 118" 12 = Van 140" 11 = Van 118" 06 = Front Section 158" 14 = Van 118" 15 = Van 140" 16 = Van 158" 56 = Wagon 158" 01 = Chassis Forward Control 118" 02 = Chassis Forward Control 140"	EX8 = Engine-2.7L I5 Mercedes Turbo Diesel	DGJ = Transmission-5-Spd. Automatic,W5A580

Group - 9

Engine Mounting

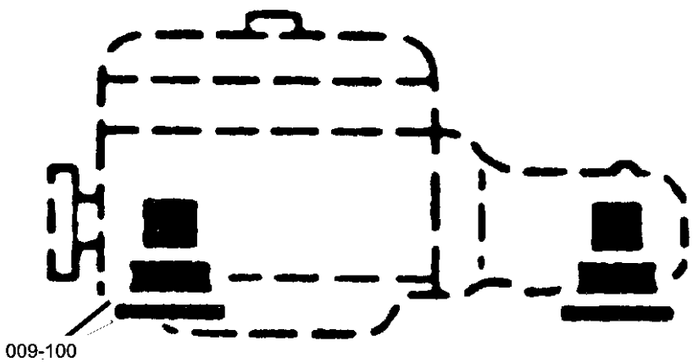

009-100 Engine Mounting 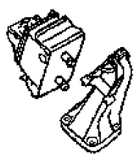			

Group - 9 Engine Mounting

Illustration Title — Group-Fig. No.

Engine Mounting
Engine Mounting ..... Fig. 9 - 110
Transmission Mounting ..... Fig. 9 - 120

Engine Mounting
Figure 9-110

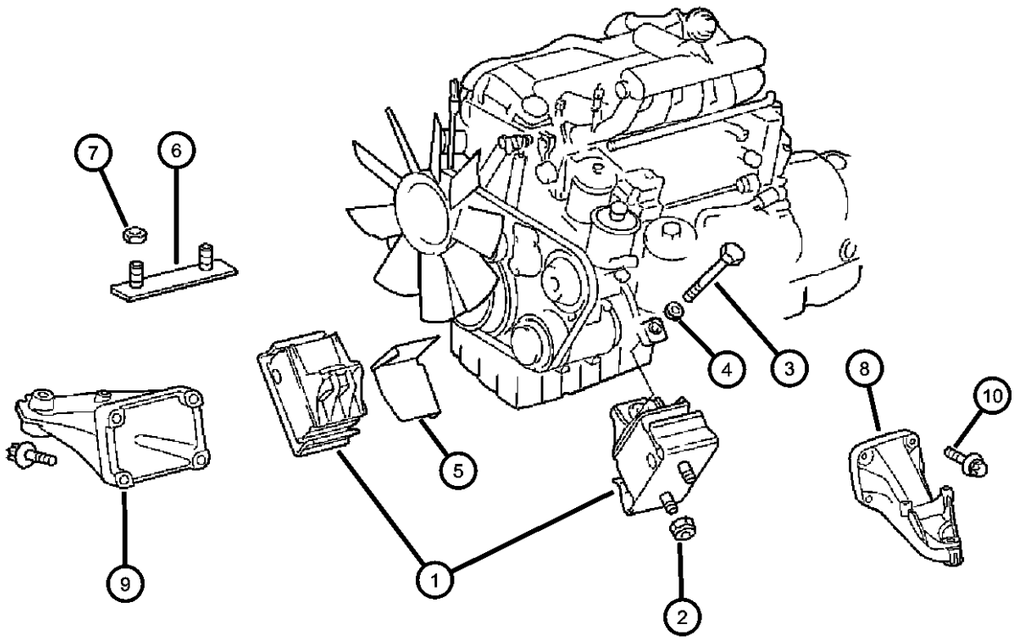

ITEM	PART NUMBER	QTY	LINE	SERIES	BODY	ENGINE	TRANS	TRIM	DESCRIPTION
Note: Sales Codes:									
[EX8]= 2.7L I Five MERCEDES BENZ-TD Engine									
1									RUBBER, RUBBER-MOUNT
	05104035AA	2	2, 6			EX8	DGJ		
		2	3, 7			EX8	DGJ		
2									NUT
	06104717AA	4	2, 6			EX8, EX9			
		4	3, 7			EX8, EX9			
3									BOLT
	06104239AA	2	2, 6			EX8, EX9			
		2	3, 7			EX8, EX9			
4									WASHER
	05104613AA	1	3, 7						
		1	2, 3, 6, 7			EX8	DGJ		
5	05117714AA	1	2, 6			EX8			SHIELD, Engine Mount
6									PLATE, Engine Mount
	05117695AA	1	2, 6			EX8, EX9			
		1	3, 7			EX8, EX9			
7									NUT, Hex, M6
	05127449AA	2	3, 7						
		2	2, 6						
8	05117659AA	1				EX8			BRACKET, Engine MountLeft
9	05103988AA	1				EX8			SUPPORT, EngineRight
10	05073723AB	1							SCREW

SPRINTER (VA)

SERIES	LINE	BODY	ENGINE	TRANSMISSION
L = LOWLINE	3 = HD DODGE 2WD 6 = Lt. Duty DODGE 4WD 2 = Med. Duty DODGE 2WD 7 = Med. Duty DODGE 4WD	55 = Wagon 140" 54 = Wagon 118" 52 = Wagon 140" 51 = Wagon 118" 12 = Van 140" 11 = Van 118" 06 = Front Section 158" 14 = Van 118" 15 = Van 140" 16 = Van 158" 56 = Wagon 158" 01 = Chassis Forward Control 118" 02 = Chassis Forward Control 140"	EX8 = Engine-2.7L I5 Mercedes Turbo Diesel	DGJ = Transmission-5-Spd. Automatic,W5A580

Transmission Mounting
Figure 9-120

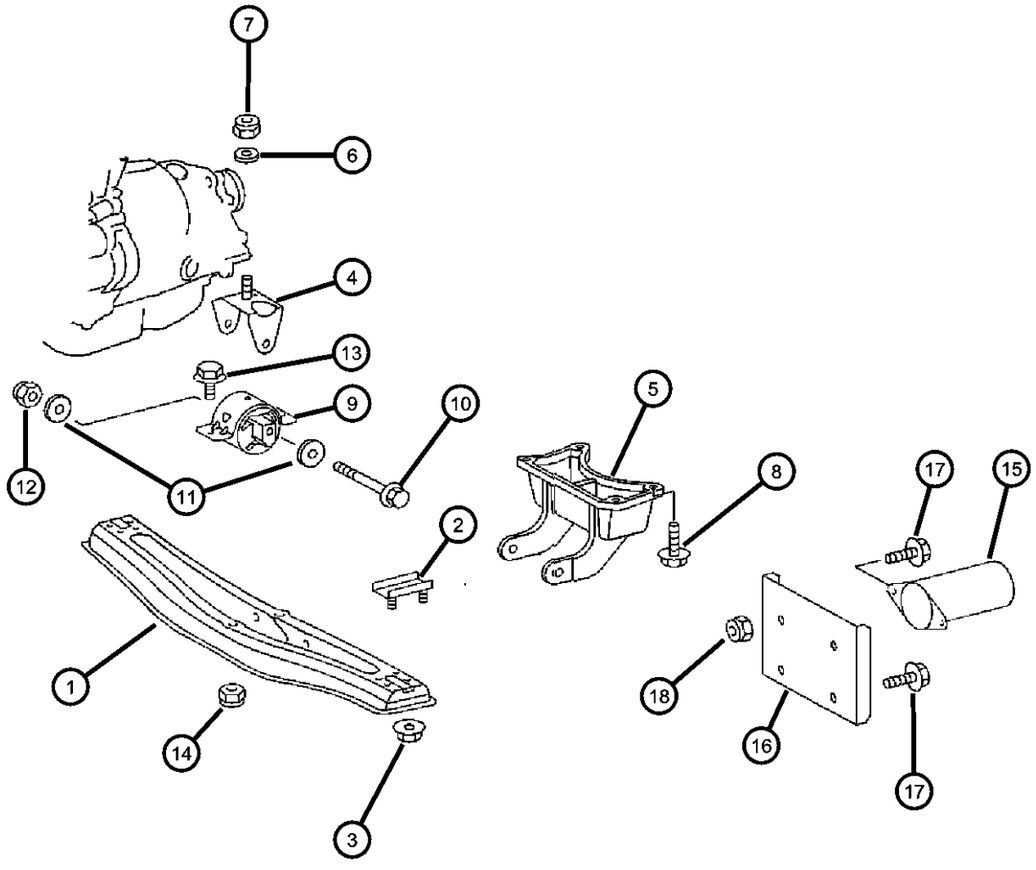

ITEM	PART NUMBER	QTY	LINE	SERIES	BODY	ENGINE	TRANS	TRIM	DESCRIPTION
Note: Sales Codes:									
[DGJ] = 5 Speed Automatic Transmission - [W5A380]									
[EX8]= 2.7L I Five MERCEDES BENZ-TD Engine									
1									SUPPORT, Engine
	05104036AA	1	2, 6				DGJ		
		1	3, 7				DGJ		
2	05117659AA	1				EX8			BRACKET, Engine Mount
3	06104717AA	4							NUT
4									BRACKET, Engine Mount
	05117698AA	1	2, 6			EX8, EX9	DGJ		
		1	3, 7			EX8, EX9	DGJ		
5									BRACKET, Transmission Mount
	05104037AA	1	2, 6				DGJ		
		1	3, 7				DGJ		
6	05132839AA	1	3, 7						WASHER
7									NUT
	06104717AA	1	3, 7						
	06104718AA	1	2, 6				DGJ		
8									BOLT, Hex Head
	06104198AA	4	2, 6				DGJ		
		4	3, 7				DGJ		
9									RUBBER, RUBBER-MOUNT
	05104038AA	1	2, 6			EX8	DGJ		
		1	3, 7			EX8	DGJ		
10									BOLT
	06104229AA	1	2, 6						
		1	3, 7						
11									WASHER, Flat
	05104641AA	2	2, 6						

SPRINTER (VA)

SERIES	LINE	BODY	ENGINE	TRANSMISSION
L = LOWLINE	3 = HD DODGE 2WD 6 = Lt. Duty DODGE 4WD 2 = Med. Duty DODGE 2WD 7 = Med. Duty DODGE 4WD	55 = Wagon 140" 54 = Wagon 118" 52 = Wagon 140" 51 = Wagon 118" 12 = Van 140" 11 = Van 118" 06 = Front Section 158" 14 = Van 118" 15 = Van 140" 16 = Van 158" 56 = Wagon 158" 01 = Chassis Forward Control 118" 02 = Chassis Forward Control 140"	EX8 = Engine-2.7L I5 Mercedes Turbo Diesel	DGJ = Transmission-5-Spd. Automatic,W5A580

Transmission Mounting
Figure 9-120

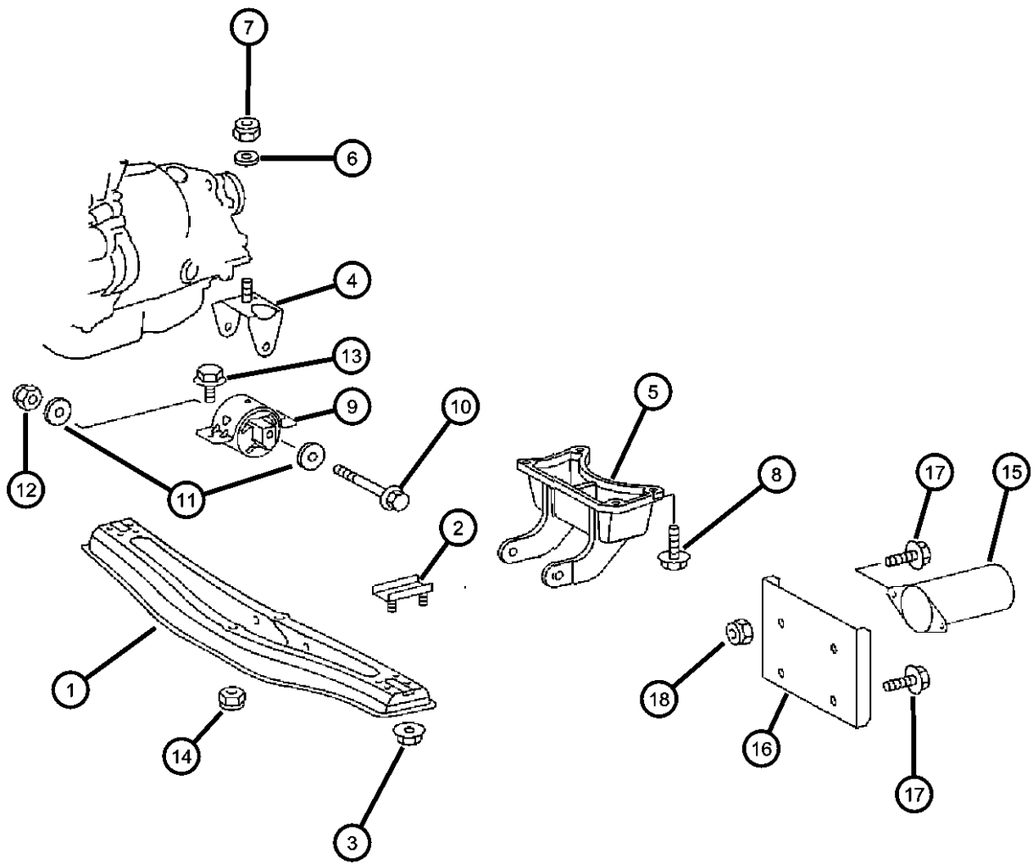

ITEM	PART NUMBER	QTY	LINE	SERIES	BODY	ENGINE	TRANS	TRIM	DESCRIPTION
		2	3, 7						
12									NUT
	06104717AA	1	2, 6						
		1	3, 7						
13									BOLT, Hex Flange Head, M10x1.50x25
	06104215AA	2	2, 6						
		2	7, 3						
14									NUT
	06104717AA	2	2, 6						
		2	3, 7						
15									ISOLATOR, Engine Mount
	05117716AA	1	2, 6						
		1	3, 7						
16									BRACKET, Engine Roll Dampener
	05133781AA	1	2, 6						
		1	3, 7						
17									SCREW
	06104022AA	2	2, 6						
		2	3, 7						
18									NUT
	06104716AA	2	3, 7						
		2	2, 6						

SPRINTER (VA)

SERIES	LINE	BODY	ENGINE	TRANSMISSION
L = LOWLINE	3 = HD DODGE 2WD 6 = Lt. Duty DODGE 4WD 2 = Med. Duty DODGE 2WD 7 = Med. Duty DODGE 4WD	55 = Wagon 140" 54 = Wagon 118" 52 = Wagon 140" 51 = Wagon 118" 12 = Van 140" 11 = Van 118" 06 = Front Section 158" 14 = Van 118" 15 = Van 140" 16 = Van 158" 56 = Wagon 158" 01 = Chassis Forward Control 118" 02 = Chassis Forward Control 140"	EX8 = Engine-2.7L I5 Mercedes Turbo Diesel	DGJ = Transmission-5-Spd. Automatic,W5A580

Group - 2.7LD-HO

2.7L Diesel - Mercedes Benz [EX8]

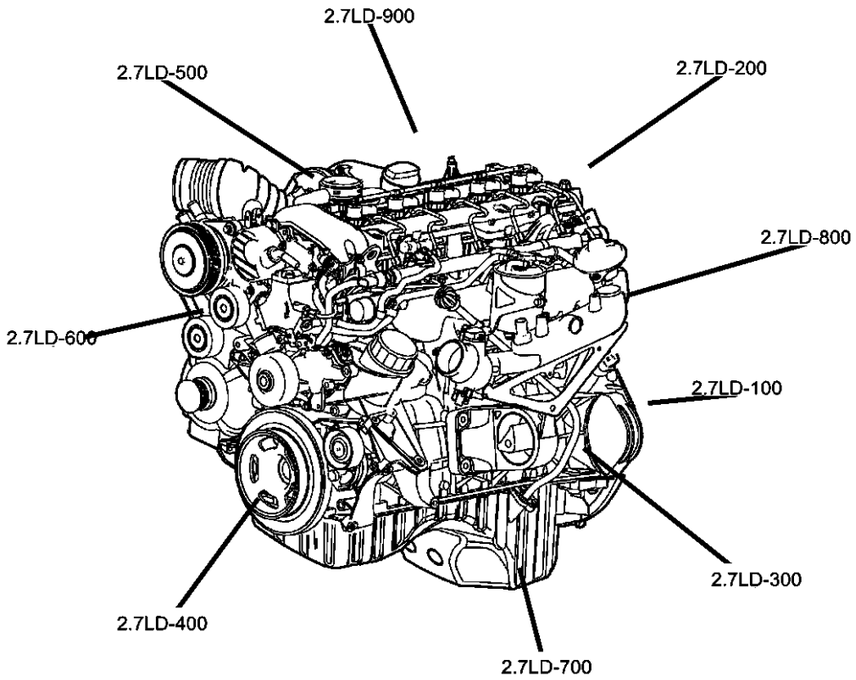

2.7LD-HO-100
Engine Identification

X	X	XXXXX	XXXX	XXXXXXXX
Model Year	Manufacturing Plant	Component Code/Usage	Month/Day	Serial Code
Last digit of model year	Saltillo S Trenton T Toluca K	Engine 3.3L – 3.8L Usage Pass Car PC Truck T		Last 8 Digits of VIN

2.7LD-HO-200
Cylinder Head

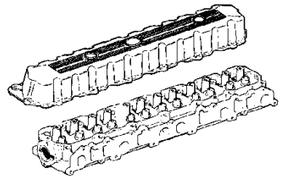

2.7LD-HO-300
Cylinder Block

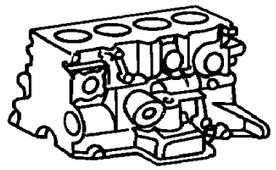

2.7LD-HO-400
Crankshaft, Piston and Drive Plate

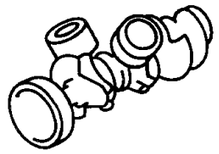

2.7LD-HO-500
Camshafts and Valves

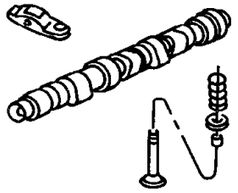

2.7LD-HO-600
Timing Belt and Cover

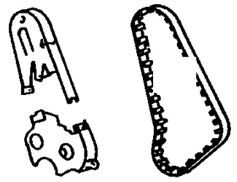

2.7LD-HO-700
Engine Oiling

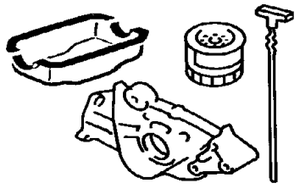

2.7LD-HO-800
Manifolds

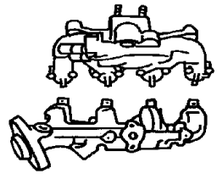

2.7LD-HO-900
Crankcase Ventilation

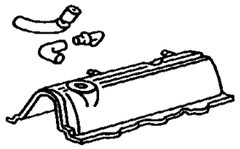

Group - 2.7LD-HO 2.7L Diesel - Mercedes Benz [EX8]

Illustration Title — Group-Fig. No.

Engine Identification
Engine Assemblies ..... Fig. 2.7LD-HO - 110

Cylinder Head
Cylinder Head, 2.7LD - H/O ..... Fig. 2.7LD-HO - 210
Cylinder Head Cover, 2.7LD - H/O ..... Fig. 2.7LD-HO - 220

Cylinder Block
Cylinder Block and Related Parts, 2.7L - H/O ..... Fig. 2.7LD-HO - 310

Crankshaft, Piston and Drive Plate
Crankshaft and Pistons, 2.7L - H/O ..... Fig. 2.7LD-HO - 410

Camshafts and Valves
Camshaft and Valves ..... Fig. 2.7LD-HO - 510

Timing Belt and Cover
Timing Cover and Chain ..... Fig. 2.7LD-HO - 610
Vaccum Pump ..... Fig. 2.7LD-HO - 620

Engine Oiling
Oil Pump ..... Fig. 2.7LD-HO - 710
Oil Cooler & Filter ..... Fig. 2.7LD-HO - 720
Oil Pan ..... Fig. 2.7LD-HO - 730
Turbo, Oil Feed & Return Lines ..... Fig. 2.7LD-HO - 740

Manifolds
Intake Manifold ..... Fig. 2.7LD-HO - 810
Exhaust Manifold ..... Fig. 2.7LD-HO - 820

Crankcase Ventilation
Crankcase Ventilation ..... Fig. 2.7LD-HO - 910

Engine Assemblies
Figure 2.7LD-HO-110

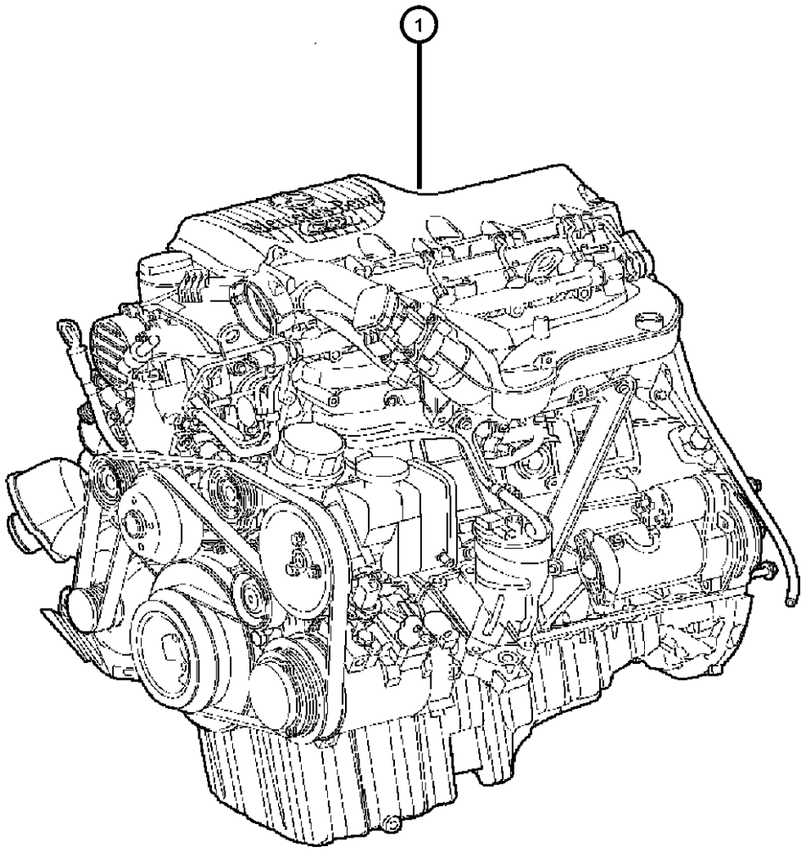

ITEM	PART NUMBER	QTY	LINE	SERIES	BODY	ENGINE	TRANS	TRIM	DESCRIPTION

Notes:
Sales Codes:
[EX8] = 2.7L Inline 5 Cylinder High Output Turbo Diesel Engine- [OM647]
[BAQ] = 115 Ampere Alternator
[BA6] = 150 Ampere Alternator
[HBD] = Heavy Duty Rear Air Conditioning

1	05117145AA	1				EX8			ENGINE, Complete, Diesel
	04798231AD								Mopar 15W-40 Engine Oil Quart
	04798232AD								Mopar 15W-40 Engine Oil Gallon

SPRINTER (VA)

SERIES	LINE	BODY	ENGINE	TRANSMISSION
L = LOWLINE	3 = HD DODGE 2WD 6 = Lt. Duty DODGE 4WD 2 = Med. Duty DODGE 2WD 7 = Med. Duty DODGE 4WD	55 = Wagon 140" 54 = Wagon 118" 52 = Wagon 140" 51 = Wagon 118" 12 = Van 140" 11 = Van 118" 06 = Front Section 158" 14 = Van 118" 15 = Van 140" 16 = Van 158" 56 = Wagon 158" 01 = Chassis Forward Control 118" 02 = Chassis Forward Control 140"	EX8 = Engine-2.7L I5 Mercedes Turbo Diesel	DGJ = Transmission-5-Spd. Automatic,W5A580

Cylinder Head, 2.7LD - H/O
Figure 2.7LD-HO-210

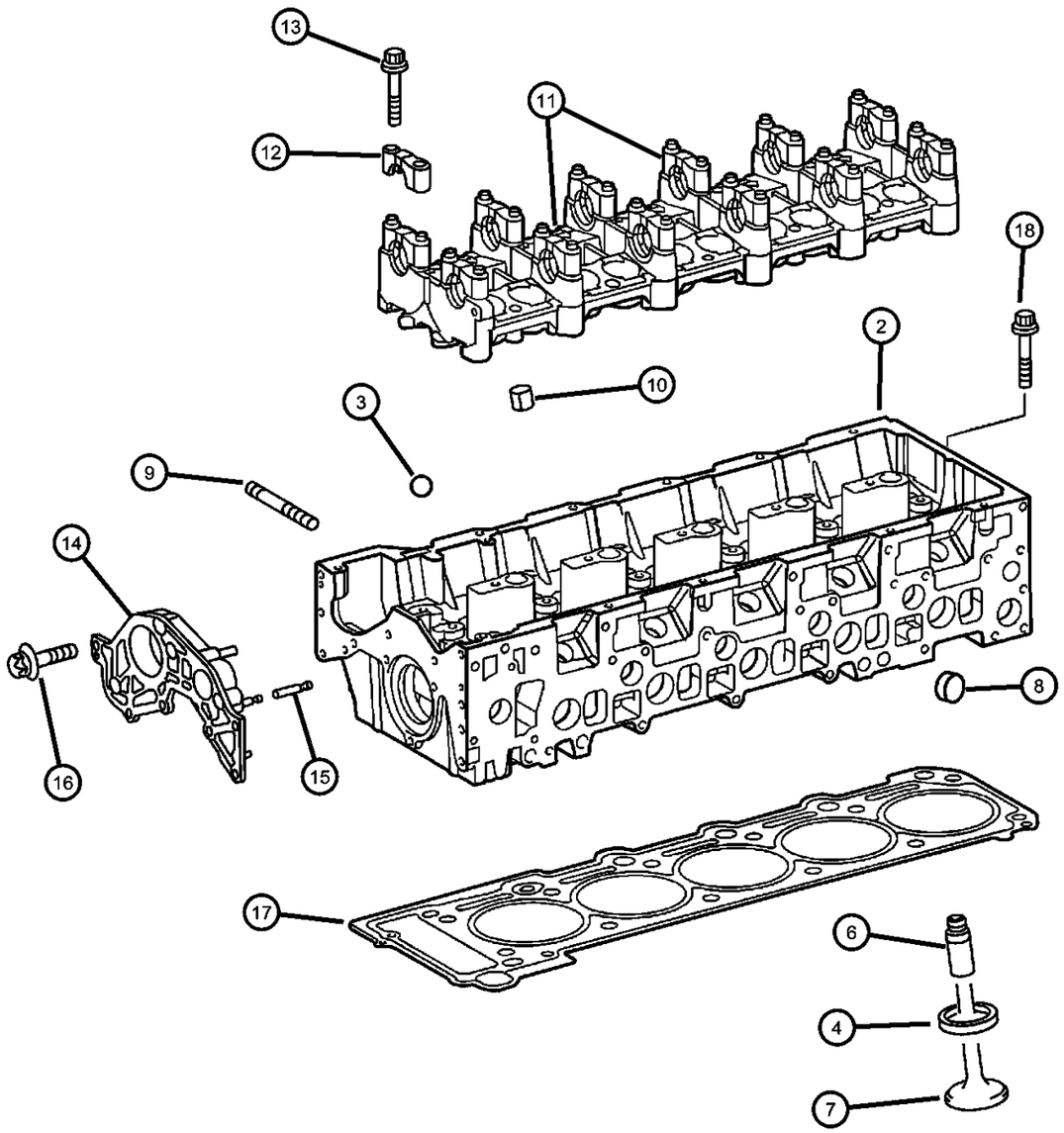

ITEM	PART NUMBER	QTY	LINE	SERIES	BODY	ENGINE	TRANS	TRIM	DESCRIPTION
NOTE:									
Sales Codes:									
[EX8] = 2.7L Inline 5 Cylinder High Output Turbo Diesel Engine - [OM647]									
-1	05103995AA	1				EX9			GASKET KIT, Cylinder Head Overhaul, Upper Gasket Package
2	05136759AA	1				EX8			HEAD, Cylinder
3	05080045AA	5				EX8			BALL
4									SEAT, Intake Valve
	05117409AA	10				EX8			29.47 mm
	05135830AA	10				EX8			31.22 mm
-5									SEAT, Exhaust Valve
	05117410AA	10				EX8			27.67 mm
	05135831AA	10				EX8			30.12 mm
6	05080044AB	20							GUIDE, Intake/Exhaust Valve, Standard Size, Valve
7	05080044AB	20							VALVE, See Camshaft Ilustration, (NOT SERVICED)
8									PLUG, Expansion
	05080026AB	8				EX8			22mm
	05080071AA	1				EX8			18mm
9	05080027AA	11				EX8			STUD
10	05073868AA	2				EX8			SLEEVE
11	05080072AA	1				EX8			HOUSING, Camshaft Bearing, With Covers
12	05117389AA	12							COVERCamshaft Bearing Cap
13	05073921AA	24				EX8			SCREW
14	05136991AA	1							CAP
15	05080080AA	1				EX8			PIN
16	05073701AA	6				EX8			SCREW
17	05134783AA	1				EX8			GASKET, Cylinder Head
18	05073703AA	12				EX8			BOLT, Cylinder Head

SPRINTER (VA)

SERIES	LINE	BODY	ENGINE	TRANSMISSION
L = LOWLINE	3 = HD DODGE 2WD 6 = Lt. Duty DODGE 4WD 2 = Med. Duty DODGE 2WD 7 = Med. Duty DODGE 4WD	55 = Wagon 140" 54 = Wagon 118" 52 = Wagon 140" 51 = Wagon 118" 12 = Van 140" 11 = Van 118" 06 = Front Section 158" 14 = Van 118" 15 = Van 140" 16 = Van 158" 56 = Wagon 158" 01 = Chassis Forward Control 118" 02 = Chassis Forward Control 140"	EX8 = Engine-2.7L I5 Mercedes Turbo Diesel	DGJ = Transmission-5-Spd. Automatic,W5A580

Cylinder Head Cover, 2.7LD - H/O
Figure 2.7LD-HO-220

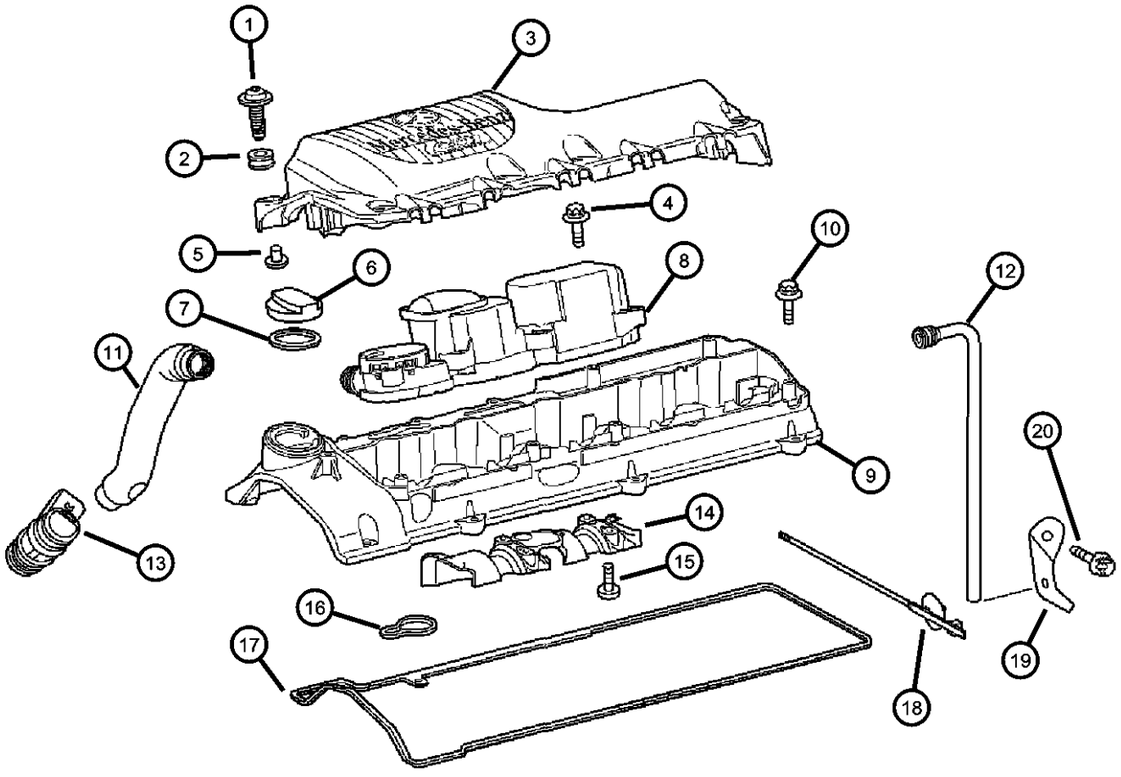

ITEM	PART NUMBER	QTY	LINE	SERIES	BODY	ENGINE	TRANS	TRIM	DESCRIPTION

NOTE:
Sales Codes:
[EX8] = 2.7L Inline 5 Cylinder High Output Turbo Diesel Engine - [OM647]

1	05103968AA	7				EX8			SCREW
2	05125944AA	4				EX8			GROMMET
3	05117287AA	1				EX8			COVER, Engine
4	06104684AA	7				EX8			SCREW
5	05125840AA	7				EX8			SLEEVE
6	05080172AA	1				EX8			CAP, Oil Filler
7	05080088AA	1				EX8			GASKET, Oil Filler Cap
8	05137030AA	1				EX8			SEPERATOR, Oil
9	05117166AA	1				EX8			COVER, Cylinder Head
10	06104008AA	8				EX8			SCREW
11	05117234AA	1				EX8			HOSE, Air Induction
12	05117291AA	1				EX8			HOSE
13	05117289AA	1				EX8			TUBE, Crankcase Vent Valve
14	05080168AA	1				EX8			PLATE
15	05073705AA	2				EX8			SCREW
16	05080083AA	5				EX8			GASKET, Injector
17	05117284AA	1				EX8			GASKET, Valve Cover
18	05126078AA	2	3, 7			EX8			TIE STRAP, Push In
19	05080302AB	5				EX8			RETAINER, Fuel Injector
20	05073824AA	2				EX8			SCREW

SPRINTER (VA)

SERIES	LINE	BODY	ENGINE	TRANSMISSION
L = LOWLINE	3 = HD DODGE 2WD 6 = Lt. Duty DODGE 4WD 2 = Med. Duty DODGE 2WD 7 = Med. Duty DODGE 4WD	55 = Wagon 140" 54 = Wagon 118" 52 = Wagon 140" 51 = Wagon 118" 12 = Van 140" 11 = Van 118" 06 = Front Section 158" 14 = Van 118" 15 = Van 140" 16 = Van 158" 56 = Wagon 158" 01 = Chassis Forward Control 118" 02 = Chassis Forward Control 140"	EX8 = Engine-2.7L I5 Mercedes Turbo Diesel	DGJ = Transmission-5-Spd. Automatic,W5A580

Cylinder Block and Related Parts, 2.7L - H/O
Figure 2.7LD-HO-310

ITEM	PART NUMBER	QTY	LINE	SERIES	BODY	ENGINE	TRANS	TRIM	DESCRIPTION
NOTE:									
Sales Codes:									
[EX8] = 2.7L Inline 5 Cylinder High Output Turbo Diesel Engine - [OM647]									
-1	05103994AA	1				EX8			GASKET KIT, Cylinder Head Overhaul, Lower Gasket Package
2	05073918AB	1				EX8			BLOCK, Cylinder
	R2527513AA								Mopar Reman Complete Engine 2002-2003 Sprinter
	04798231AD								Mopar 15W-40 Engine Oil Quart
	04798232AD								Mopar 15W-40 Engine Oil Gallon
3	05073918AB	1							CAP, Main, Serviced With # 1, (NOT SERVICED)
4	05073918AB	1							BOLT, Main Bearing Cap, Serviced With # 1, (NOT SERVICED)
5	05073837AA	2				EX8			PLUG, Screw, Cylinder Block
6	05073850AA	2				EX8			O RING
7	05073860AA	3				EX8			PLUG, Expansion
8	05073861AA	1				EX8			CONNECTOR
-9	05073864AA	1				EX8			BALL
10	06104463AA	1				EX8			PLUG
11	05073890AA	1				EX8			PLUG
12	05073891AA	1				EX8			O RING
13	05073869AA	2				EX8			DOWEL
14	05073895AA	5				EX8			JET, Piston Oil Cooler
15	05073868AA	2				EX8			SLEEVE
16	05073887AB	1				EX8			COVER
17	06104006AA	6				EX8			BOLT
18	05073894AA	1				EX8			PIPE, Oil Return
-19	05135855AA	1							HEATER, Engine Block

SPRINTER (VA)

SERIES	LINE	BODY	ENGINE	TRANSMISSION
L = LOWLINE	3 = HD DODGE 2WD 6 = Lt. Duty DODGE 4WD 2 = Med. Duty DODGE 2WD 7 = Med. Duty DODGE 4WD	55 = Wagon 140" 54 = Wagon 118" 52 = Wagon 140" 51 = Wagon 118" 12 = Van 140" 11 = Van 118" 06 = Front Section 158" 14 = Van 118" 15 = Van 140" 16 = Van 158" 56 = Wagon 158" 01 = Chassis Forward Control 118" 02 = Chassis Forward Control 140"	EX8 = Engine-2.7L I5 Mercedes Turbo Diesel	DGJ = Transmission-5-Spd. Automatic,W5A580

Crankshaft and Pistons, 2.7L - H/O
Figure 2.7LD-HO-410

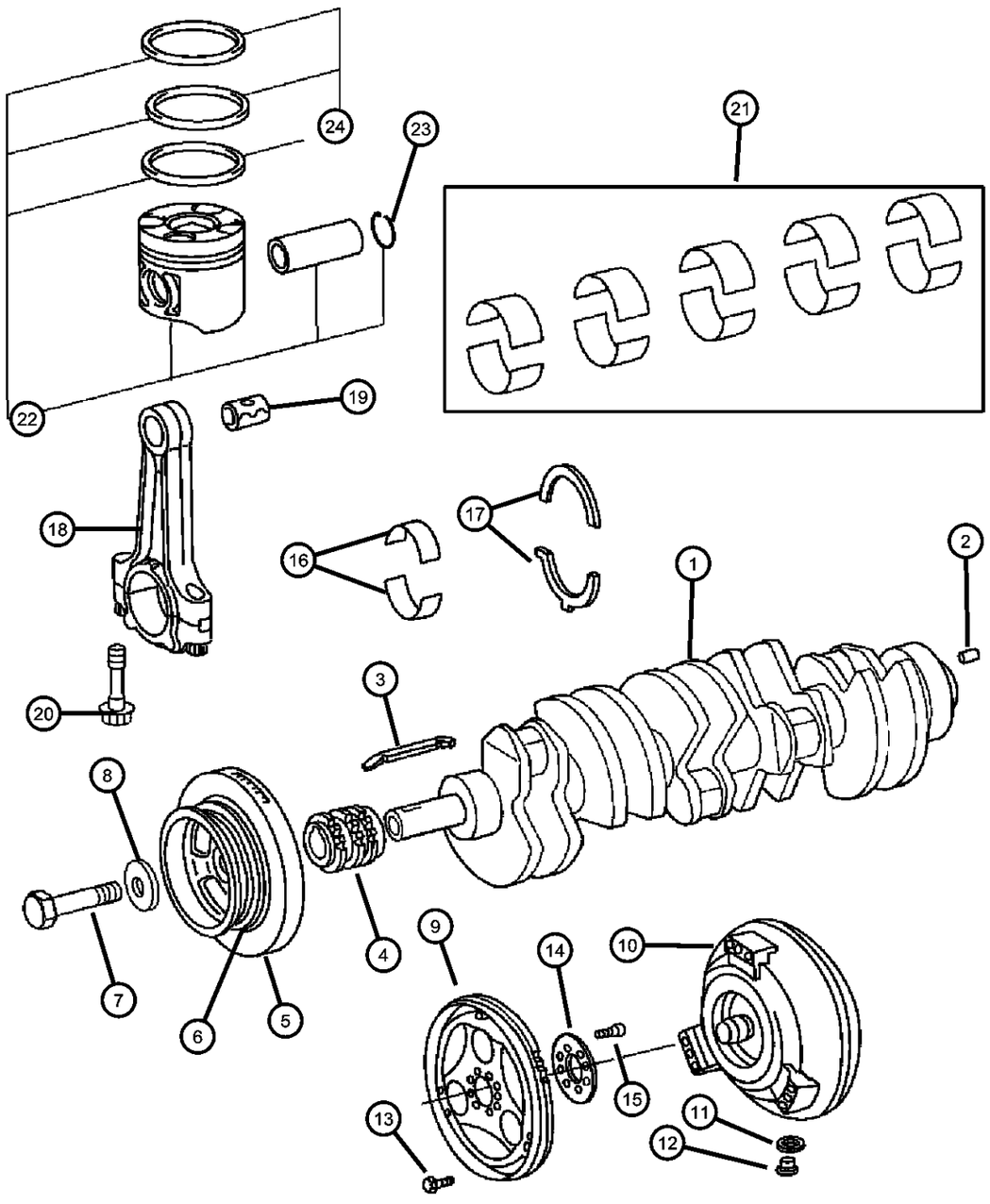

ITEM	PART NUMBER	QTY	LINE	SERIES	BODY	ENGINE	TRANS	TRIM	DESCRIPTION
NOTE:									
Sales Codes:									
[EX8] = 2.7L Inline 5 Cylinder High Output Turbo Diesel Engine - [OM647]									
1	05080012AA	1				EX8			CRANKSHAFT, Engine, See [TSB 09-003-06]
2	05080024AA	1				EX8			DOWEL
3	05073998AA	1				EX8			KEY, Woodruff
4	05117378AA	1				EX8			GEAR, Crankshaft
5	05103972AA	1				EX8			DAMPER, Crankshaft
6	05103998AA	1							PULLEY, Crankshaft
7	05073696AA	1				EX8			SCREW
8	05080005AA	1				EX8			WASHER
9	05137274AA	1				EX8			FLEX PLATE
10	05104567AA	1					DGJ		CONVERTER, Torque
11	05080014AA	1							O RING
12	05080398AA	1				EX8			PLUG
13									SCREW
	06507095AA	6	2, 6				DGJ		
		6	3, 7				DGJ		
14	05080066AA	1				EX8	DGJ		WASHER
15	05103968AA	7				EX8			SCREW
16									BEARING, Crankshaft
	05073953AB	AR	2, 3, 6, 7			EX8	DGJ		Color [White] - See [TSB 09-003-06] Main Bearing Cap Only
	05102127AA	AR							Color [Blue] - See [TSB 09-003-06]
	05102128AA	AR							Color [Yellow] - See [TSB 09-003-06]
	05102129AA	AR							Color [Red] - See [TSB 09-003-06]

SPRINTER (VA)

SERIES	LINE	BODY	ENGINE	TRANSMISSION
L = LOWLINE	3 = HD DODGE 2WD 6 = Lt. Duty DODGE 4WD 2 = Med. Duty DODGE 2WD 7 = Med. Duty DODGE 4WD	55 = Wagon 140" 54 = Wagon 118" 52 = Wagon 140" 51 = Wagon 118" 12 = Van 140" 11 = Van 118" 06 = Front Section 158" 14 = Van 118" 15 = Van 140" 16 = Van 158" 56 = Wagon 158" 01 = Chassis Forward Control 118" 02 = Chassis Forward Control 140"	EX8 = Engine-2.7L I5 Mercedes Turbo Diesel	DGJ = Transmission-5-Spd. Automatic,W5A580

AR = use ase required - = Non illustrrated part

Crankshaft and Pistons, 2.7L - H/O
Figure 2.7LD-HO-410

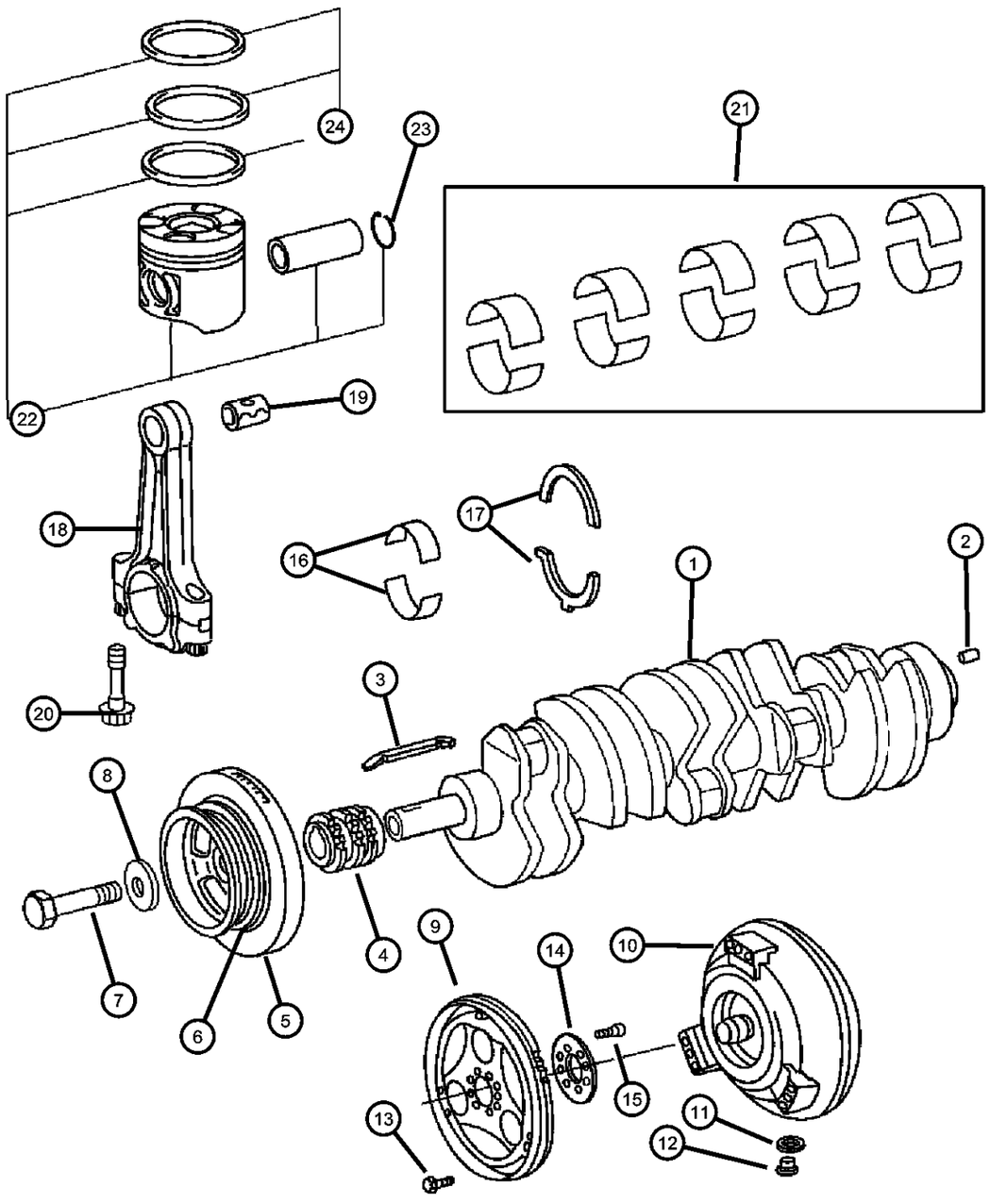

ITEM	PART NUMBER	QTY	LINE	SERIES	BODY	ENGINE	TRANS	TRIM	DESCRIPTION
	05179498AA	AR	2, 3, 6, 7			EX8	DGJ		Color [Violet] - See [TSB 09-003-06] Main Bearing Cap Only
17	05086295AA	2				EX8			BEARING, Crankshaft, Thurst Bearing
18	05117318AA	5				EX8			ROD, Connecting
19	05117367AA	5				EX8			BUSHING, Connecting Rod
20	05073698AA	10				EX8			BOLT, Connecting Rod
21	05086153AA	1				EX8			BEARING, Connecting Rod, STD.
22	05117317AA	5				EX8			PISTON
23	05080034AA	10				EX8			RING, Piston Pin
24	05138004AA	5				EX8			RING KIT, Piston

SPRINTER (VA)

SERIES	LINE	BODY	ENGINE	TRANSMISSION
L = LOWLINE	3 = HD DODGE 2WD 6 = Lt. Duty DODGE 4WD 2 = Med. Duty DODGE 2WD 7 = Med. Duty DODGE 4WD	55 = Wagon 140" 54 = Wagon 118" 52 = Wagon 140" 51 = Wagon 118" 12 = Van 140" 11 = Van 118" 06 = Front Section 158" 14 = Van 118" 15 = Van 140" 16 = Van 158" 56 = Wagon 158" 01 = Chassis Forward Control 118" 02 = Chassis Forward Control 140"	EX8 = Engine-2.7L I5 Mercedes Turbo Diesel	DGJ = Transmission-5-Spd. Automatic,W5A580

AR = use ase required - = Non illustrrated part

Camshaft and Valves
Figure 2.7LD-HO-510

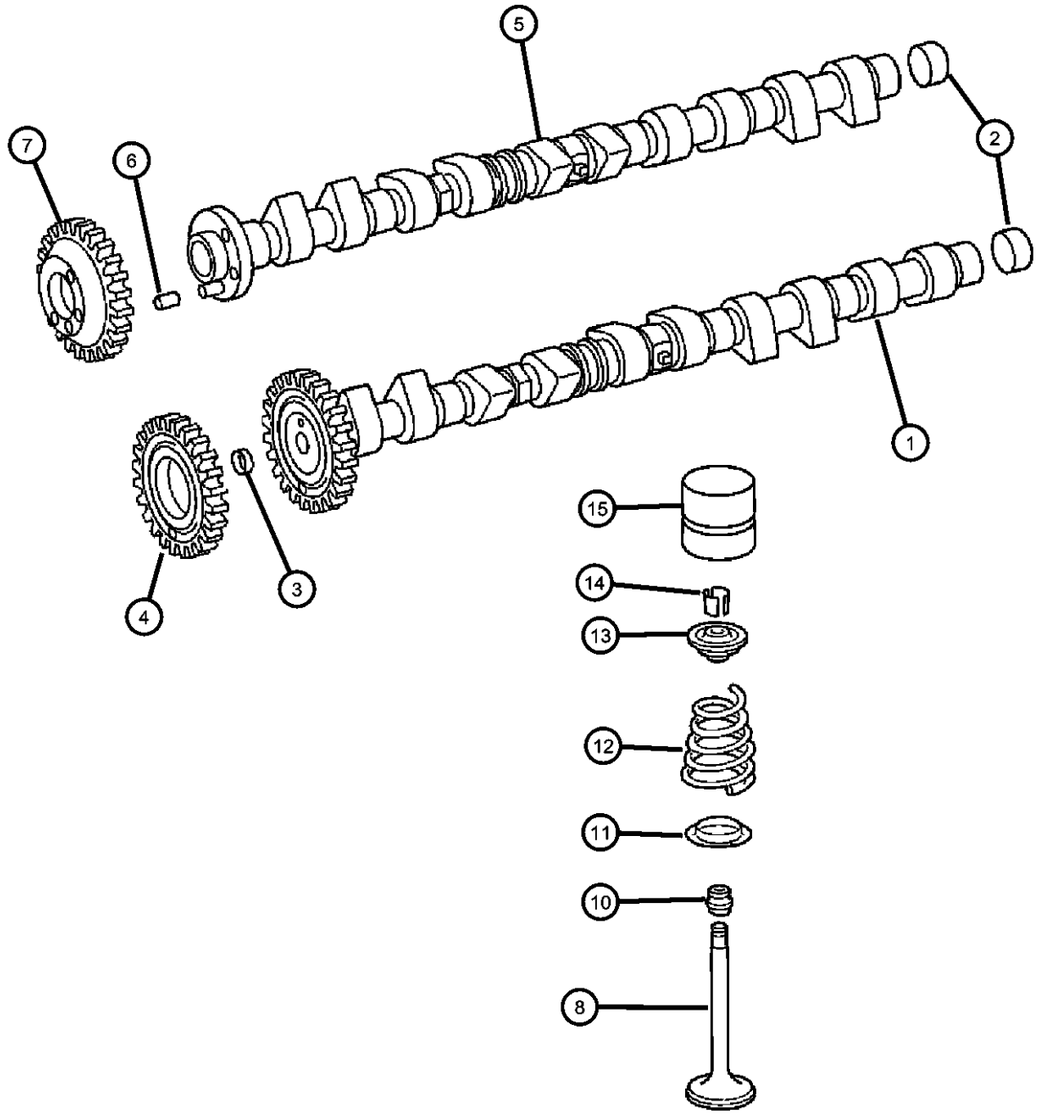

ITEM	PART NUMBER	QTY	LINE	SERIES	BODY	ENGINE	TRANS	TRIM	DESCRIPTION
NOTE:									
Sales Codes:									
[EX8] = 2.7L Inline 5 Cylinder High Output Turbo Diesel Engine - [OM647]									
1	05117371AA	1				EX8			CAMSHAFTIntake
2									PLUG, Expansion
	05080071AA	1				EX8			Exhaust
		1				EX8			Intake
3	05080188AA	1				EX8			PLUG, ExpansionIntake
4	05080110AA	1				EX9			GEAR, Camshaft
5	05080095AA	1				EX8			CAMSHAFT, Exhaust
6	05080096AA	1				EX8			PIN, Dowel
7	05073814AA	1				EX8			GEAR, CamshaftExhaust
8	05117399AA	10				EX8			VALVE, Intake, Standard
-9	05117402AA	10				EX8			VALVE, Engine Exhaust
10	05086290AA	5							SEAL, Valve Guide
11	05080055AA	20				EX8			RETAINER, Valve Spring
12									SPRING, Valve
	05080054AA	10				EX8			Intake
	05117403AA	10				EX8			Exhaust
13	05080052AA	20				EX8			RETAINER, Valve Spring
14	05080051AA	40				EX8			LOCK, Valve Spring Retainer
15	05080060AB	20				EX8			TAPPET, Valve

SPRINTER (VA)

SERIES	LINE	BODY	ENGINE	TRANSMISSION
L = LOWLINE	3 = HD DODGE 2WD 6 = Lt. Duty DODGE 4WD 2 = Med. Duty DODGE 2WD 7 = Med. Duty DODGE 4WD	55 = Wagon 140" 54 = Wagon 118" 52 = Wagon 140" 51 = Wagon 118" 12 = Van 140" 11 = Van 118" 06 = Front Section 158" 14 = Van 118" 15 = Van 140" 16 = Van 158" 56 = Wagon 158" 01 = Chassis Forward Control 118" 02 = Chassis Forward Control 140"	EX8 = Engine-2.7L I5 Mercedes Turbo Diesel	DGJ = Transmission-5-Spd. Automatic,W5A580

Timing Cover and Chain
Figure 2.7LD-HO-610

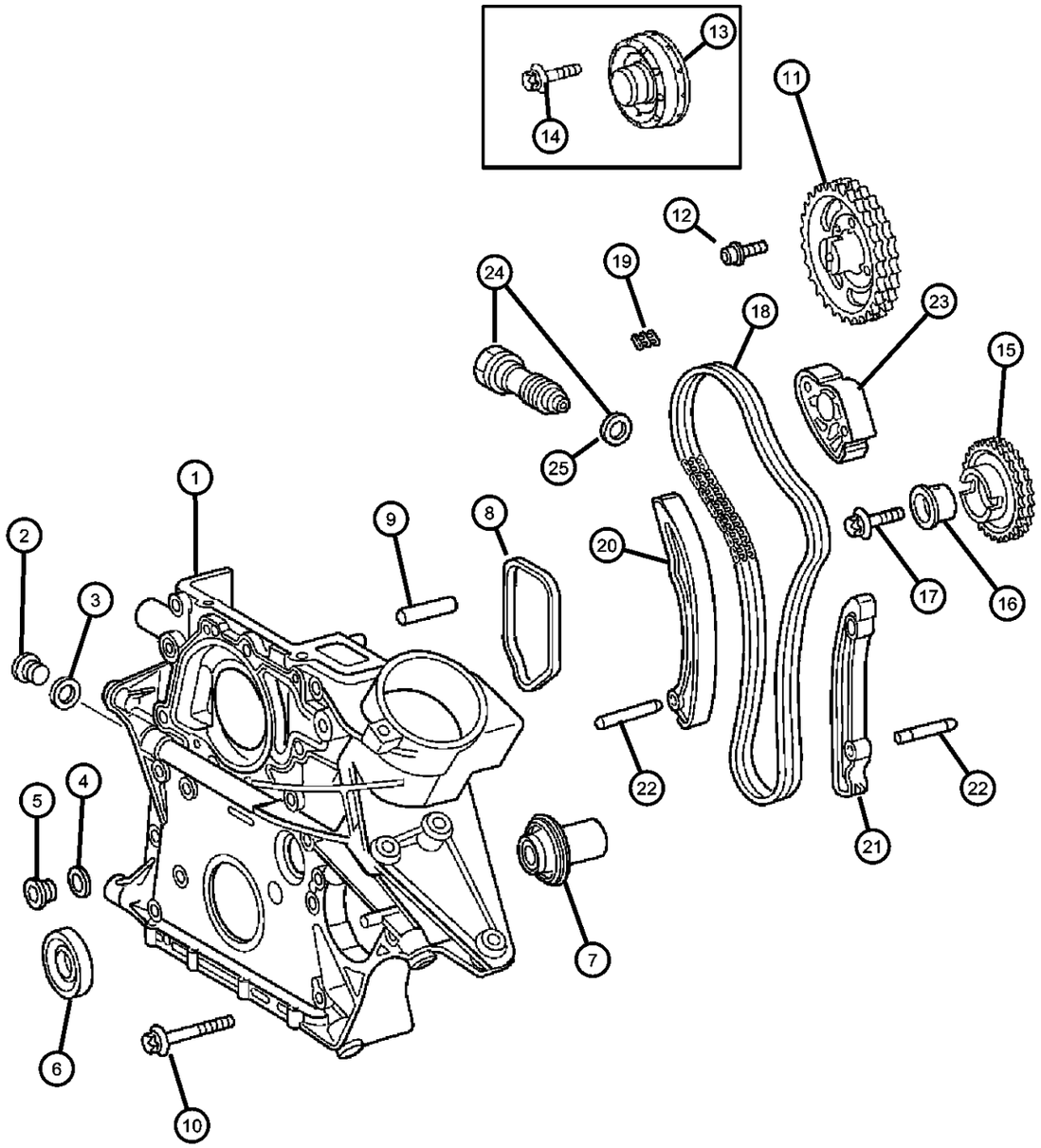

ITEM	PART NUMBER	QTY	LINE	SERIES	BODY	ENGINE	TRANS	TRIM	DESCRIPTION
NOTE:									
Sales Codes:									
1	05103969AA	1				EX8			COVER, Timing Case
2	05080071AA	1				EX8			PLUG, Expansion
3	05080015AA	1				EX8			O RING
4	05080014AA	1				EX8			O RING
5	05080398AA	1				EX8			PLUG
6	05073675AB	1							OIL SEAL
7	05080179AA	1				EX8			VALVE, Pressure Relief
8	05073677AA	1				EX8			GASKET, Timing Cover
9	05073936AA	1				EX8			DOWEL
10									SCREW
	05137660AA	3				EX8			[M8X1.25X80.00]
	06104031AA	2				EX8			[M8X1.25X60.00]
	06104035AA	4				EX8			[M8X1.25X90.00]
11	05080110AA	1				EX8			GEAR, Camshaft
12	05073901AA	3				EX8			SCREW
13	05137030AA	1				EX8			SEPERATOR, OilCamshaft
14	06104684AA	5				EX8			SCREW
15	05117380AA	1				EX8			GEAR, Intermediate
16	05080098AA	1				EX8			BEARING
17	05073707AA	1				EX8			SCREW
18	05080209AB	1				EX8			CHAIN, Timing
19	05086196AA	1				EX8			LINK, Chain
20	05080099AA	1				EX8			GUIDE, Timing Chain
21	05080100AA	1				EX8			GUIDE, Timing Chain
22	05073870AA	2				EX8			DOWEL
23	05080101AA	1				EX8			GUIDE, Timing Chain

SPRINTER (VA)

SERIES	LINE	BODY	ENGINE	TRANSMISSION
L = LOWLINE	3 = HD DODGE 2WD 6 = Lt. Duty DODGE 4WD 2 = Med. Duty DODGE 2WD 7 = Med. Duty DODGE 4WD	55 = Wagon 140" 54 = Wagon 118" 52 = Wagon 140" 51 = Wagon 118" 12 = Van 140" 11 = Van 118" 06 = Front Section 158" 14 = Van 118" 15 = Van 140" 16 = Van 158" 56 = Wagon 158" 01 = Chassis Forward Control 118" 02 = Chassis Forward Control 140"	EX8 = Engine-2.7L I5 Mercedes Turbo Diesel	DGJ = Transmission-5-Spd. Automatic,W5A580

Timing Cover and Chain
Figure 2.7LD-HO-610

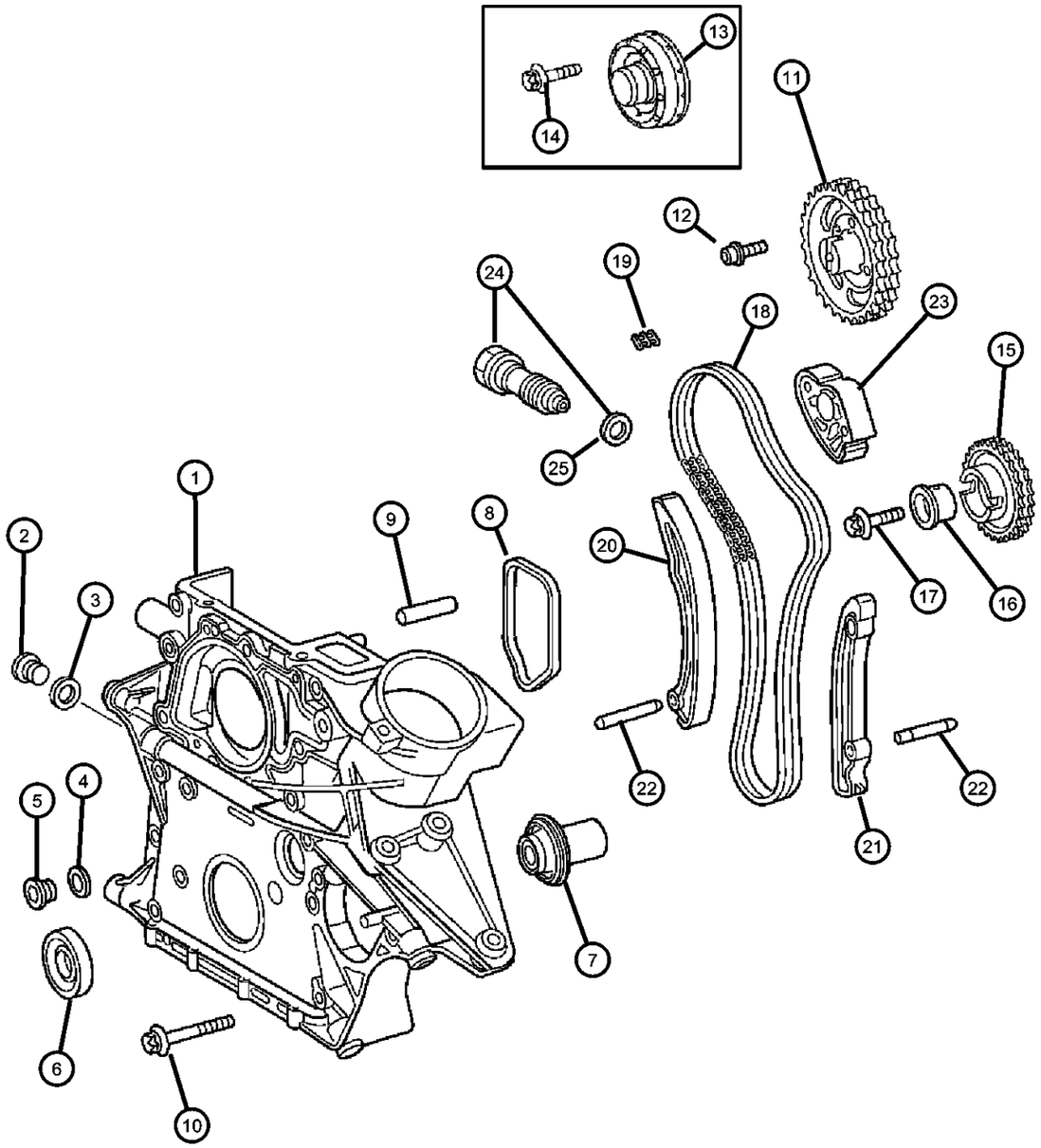

ITEM	PART NUMBER	QTY	LINE	SERIES	BODY	ENGINE	TRANS	TRIM	DESCRIPTION
24	05080102AB	1				EX8			TENSIONER, Chain
25	05125905AA	1				EX8			O RING

SPRINTER (VA)

SERIES	LINE	BODY	ENGINE	TRANSMISSION
L = LOWLINE	3 = HD DODGE 2WD 6 = Lt. Duty DODGE 4WD 2 = Med. Duty DODGE 2WD 7 = Med. Duty DODGE 4WD	55 = Wagon 140" 54 = Wagon 118" 52 = Wagon 140" 51 = Wagon 118" 12 = Van 140" 11 = Van 118" 06 = Front Section 158" 14 = Van 118" 15 = Van 140" 16 = Van 158" 56 = Wagon 158" 01 = Chassis Forward Control 118" 02 = Chassis Forward Control 140"	EX8 = Engine-2.7L I5 Mercedes Turbo Diesel	DGJ = Transmission-5-Spd. Automatic,W5A580

AR = use ase required - = Non illustrrated part

Vaccum Pump
Figure 2.7LD-HO-620

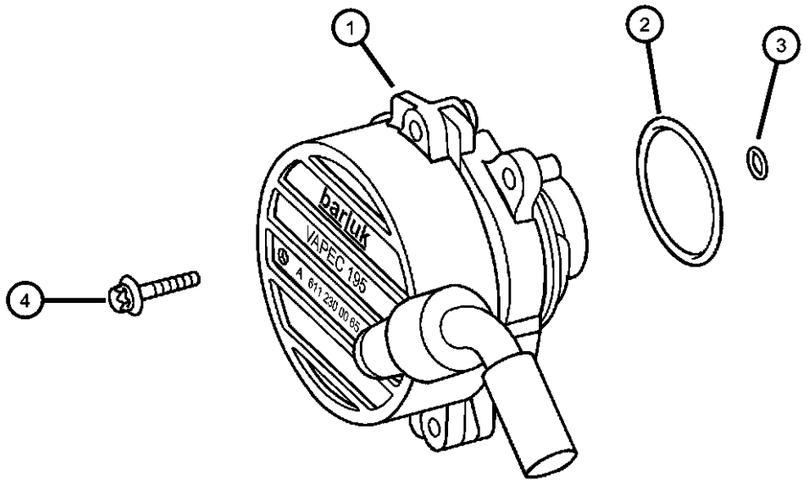

ITEM	PART NUMBER	QTY	LINE	SERIES	BODY	ENGINE	TRANS	TRIM	DESCRIPTION
NOTE:									
Sales Codes:									
1	05117675AA	1				EX8			PUMP, Vacuum
2	05080334AA	1				EX8			O RING
3	05080335AA	1				EX8			O RING
4	05073702AA	2				EX8			SCREW

SPRINTER (VA)

SERIES	LINE	BODY	ENGINE	TRANSMISSION
L = LOWLINE	3 = HD DODGE 2WD 6 = Lt. Duty DODGE 4WD 2 = Med. Duty DODGE 2WD 7 = Med. Duty DODGE 4WD	55 = Wagon 140" 54 = Wagon 118" 52 = Wagon 140" 51 = Wagon 118" 12 = Van 140" 11 = Van 118" 06 = Front Section 158" 14 = Van 118" 15 = Van 140" 16 = Van 158" 56 = Wagon 158" 01 = Chassis Forward Control 118" 02 = Chassis Forward Control 140"	EX8 = Engine-2.7L I5 Mercedes Turbo Diesel	DGJ = Transmission-5-Spd. Automatic,W5A580

Oil Pump
Figure 2.7LD-HO-710

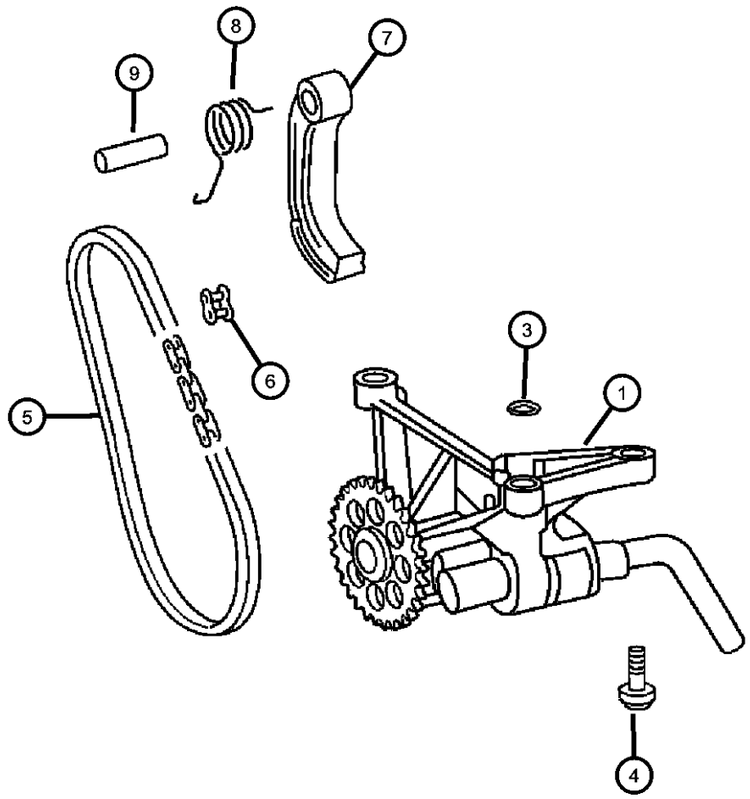

ITEM	PART NUMBER	QTY	LINE	SERIES	BODY	ENGINE	TRANS	TRIM	DESCRIPTION
NOTE:									
Sales Codes:									
1	05117594AA	1				EX8			PUMP, Engine Oil
-2	05080119AA	1				EX8			SNAP RING
3	05080123AB	1				EX8			O RING
4	05073710AA	3				EX8			SCREW
5	05080128AA	1				EX8			CHAIN, Pump Drive
6	05080129AA	1				EX8			LINK, Chain
7	05080121AA	1				EX8			ARM, Tensioner
8	05080120AA	1				EX8			SPRING
9	05073871AA	1				EX8			DOWEL

SPRINTER (VA)

SERIES	LINE	BODY	ENGINE	TRANSMISSION
L = LOWLINE	3 = HD DODGE 2WD 6 = Lt. Duty DODGE 4WD 2 = Med. Duty DODGE 2WD 7 = Med. Duty DODGE 4WD	55 = Wagon 140" 54 = Wagon 118" 52 = Wagon 140" 51 = Wagon 118" 12 = Van 140" 11 = Van 118" 06 = Front Section 158" 14 = Van 118" 15 = Van 140" 16 = Van 158" 56 = Wagon 158" 01 = Chassis Forward Control 118" 02 = Chassis Forward Control 140"	EX8 = Engine-2.7L I5 Mercedes Turbo Diesel	DGJ = Transmission-5-Spd. Automatic,W5A580

Oil Cooler & Filter
Figure 2.7LD-HO-720

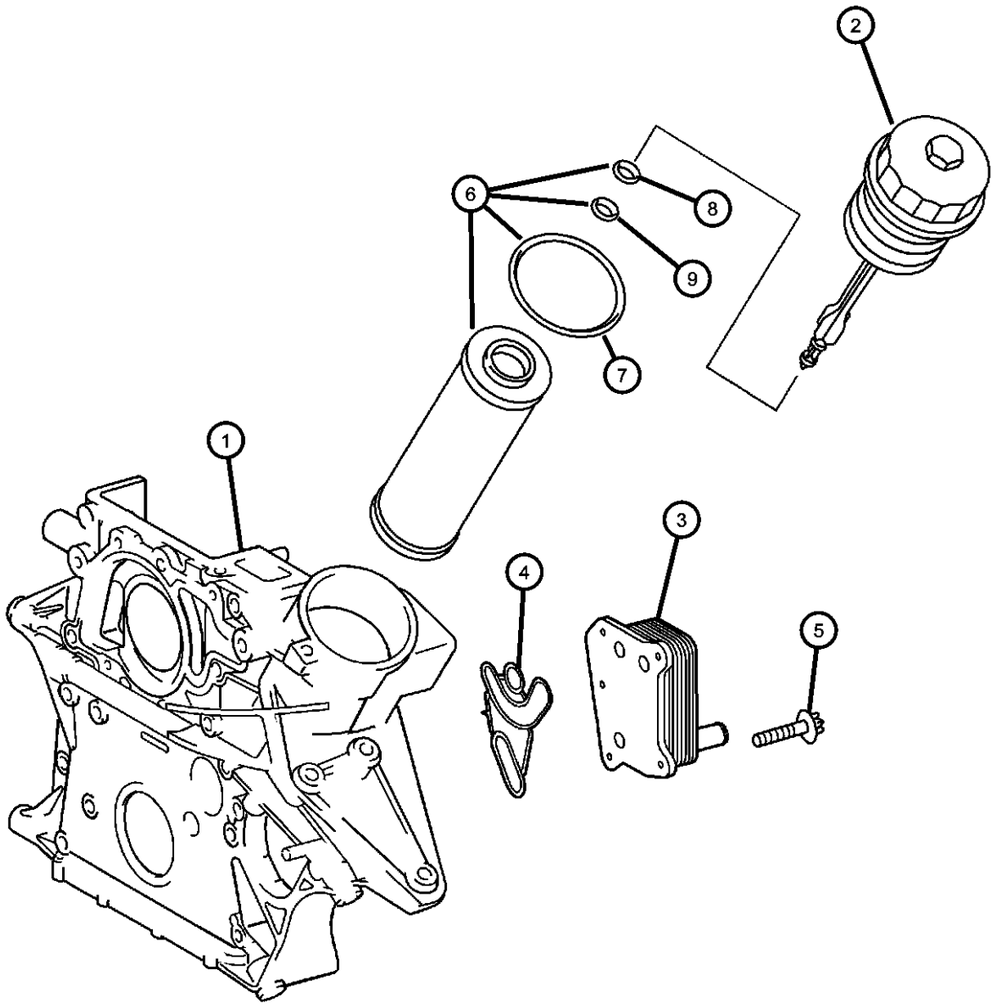

ITEM	PART NUMBER	QTY	LINE	SERIES	BODY	ENGINE	TRANS	TRIM	DESCRIPTION

NOTE:
Sales Codes:

1	05103969AA	1				EX8			COVER, Timing Case
2	05080029AA	1				EX8			HEAD, Oil Filter
3	05080402AA	1				EX8			COOLER, Oil
4	05080141AA	1				EX8			GASKET, Oil Cooler
5	06104681AA	5				EX8			SCREW
6	05086301AA	1				EX8			FILTER, Engine Oil
7	05080242AA	1							O RING
8	05080242AA	1							O RING
9	05086297AA	1							O RING

SPRINTER (VA)

SERIES	LINE	BODY	ENGINE	TRANSMISSION
L = LOWLINE	3 = HD DODGE 2WD 6 = Lt. Duty DODGE 4WD 2 = Med. Duty DODGE 2WD 7 = Med. Duty DODGE 4WD	55 = Wagon 140" 54 = Wagon 118" 52 = Wagon 140" 51 = Wagon 118" 12 = Van 140" 11 = Van 118" 06 = Front Section 158" 14 = Van 118" 15 = Van 140" 16 = Van 158" 56 = Wagon 158" 01 = Chassis Forward Control 118" 02 = Chassis Forward Control 140"	EX8 = Engine-2.7L I5 Mercedes Turbo Diesel	DGJ = Transmission-5-Spd. Automatic,W5A580

Oil Pan
Figure 2.7LD-HO-730

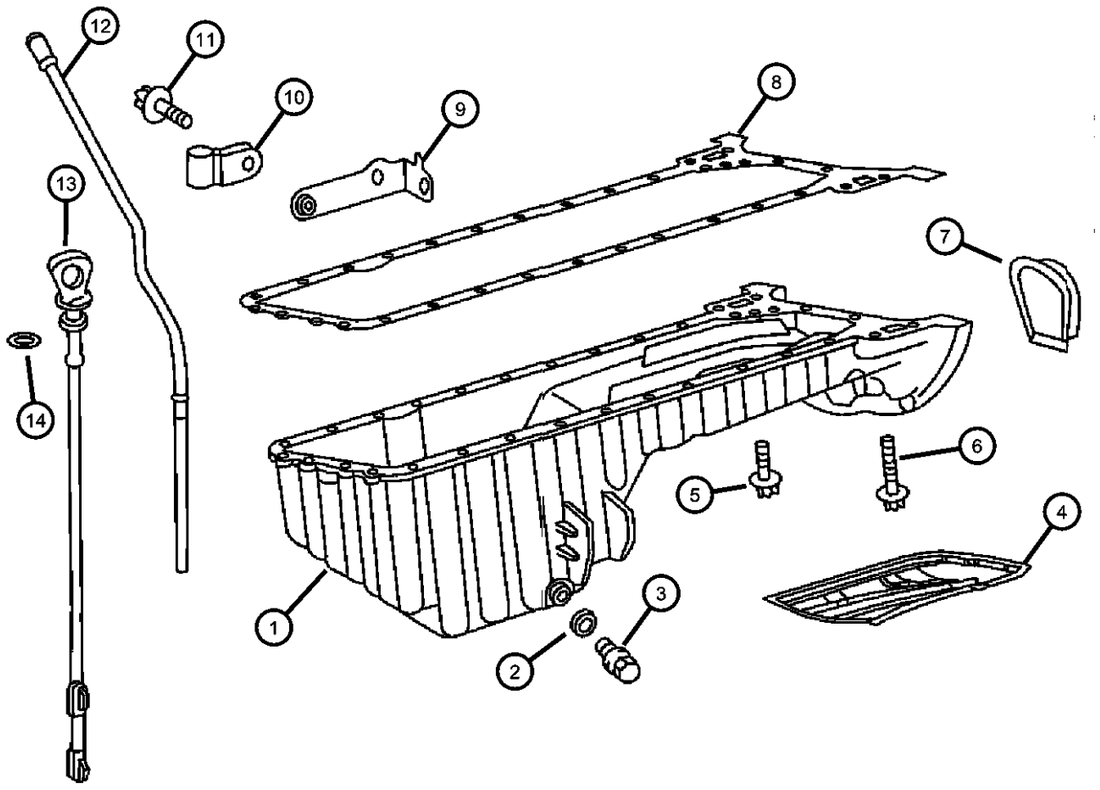

ITEM	PART NUMBER	QTY	LINE	SERIES	BODY	ENGINE	TRANS	TRIM	DESCRIPTION
NOTE:									
Sales Codes:									
1	05117152AA	1				EX8			PAN, Oil
2	05073946AA	1				EX8			GASKET, Drain Plug
3	05073945AA	1				EX8			PLUG, Oil Drain
4	05117250AA	1				EX8			PAN, OilWindage Tray
5									BOLT, M6x20
	05126198AA	4	2, 6						[M6x20]
		4	3, 7						[M6x20]
6									BOLT
	06104006AA	18				EX8			[M6x1.0x20]
	06104029AA	2				EX8			[M8x1.25x50]
7	05103911AA	1				EX8			COVER
8	05080064AA	1				EX8			GASKET, Oil Pan
9	05117308AA	1				EX8			BRACKET
10	06104827AA	1				EX8			CLAMP, Tube Retaining
11	05135828AA	1							SCREW
12	05117302AA	1				EX8			TUBE, Engine Oil Indicator
13	05103962AA	1				EX8			INDICATOR, Engine Oil Level
14	05073943AA	1				EX8			O RING, Engine Oil Level Tube
-15	05073692AA	2				EX8			SCREW

SPRINTER (VA)

SERIES	LINE	BODY	ENGINE	TRANSMISSION
L = LOWLINE	3 = HD DODGE 2WD 6 = Lt. Duty DODGE 4WD 2 = Med. Duty DODGE 2WD 7 = Med. Duty DODGE 4WD	55 = Wagon 140" 54 = Wagon 118" 52 = Wagon 140" 51 = Wagon 118" 12 = Van 140" 11 = Van 118" 06 = Front Section 158" 14 = Van 118" 15 = Van 140" 16 = Van 158" 56 = Wagon 158" 01 = Chassis Forward Control 118" 02 = Chassis Forward Control 140"	EX8 = Engine-2.7L I5 Mercedes Turbo Diesel	DGJ = Transmission-5-Spd. Automatic,W5A580

Turbo, Oil Feed & Return Lines
Figure 2.7LD-HO-740

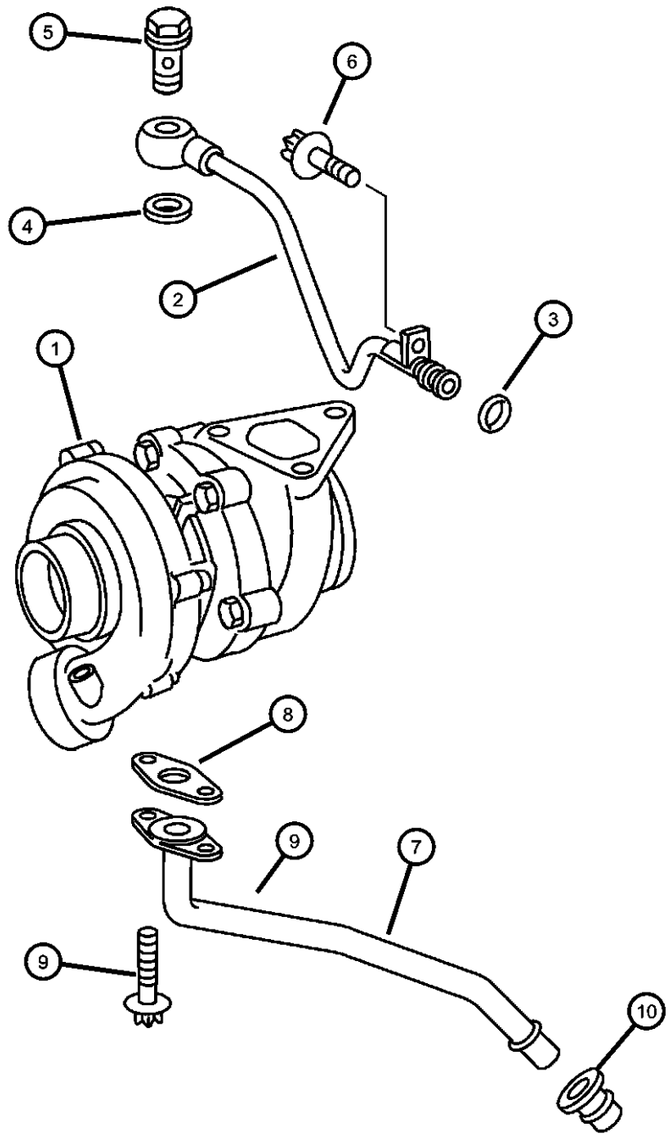

ITEM	PART NUMBER	QTY	LINE	SERIES	BODY	ENGINE	TRANS	TRIM	DESCRIPTION
NOTE:									
Sales Codes:									
1	05117505AA	1				EX8			TURBOCHARGER
2	05103984AA	1				EX8			TUBE, Turbo Oil Feed
3	05080135AA	1				EX8			O RING
4	05080136AB	2				EX8			O RING
5	05080137AA	1				EX8			SCREW
6	06104005AA	1				EX8			SCREW
7	05103983AA	1				EX8			TUBE, Turbo Oil Return
8	05117624AA	1				EX8			GASKET, Turbo Oil Return Pipe
9	06104005AA	2				EX8			SCREW
10	05080140AB	1				EX8			GASKET, Turbo Oil Return Pipe

SPRINTER (VA)

SERIES	LINE	BODY	ENGINE	TRANSMISSION
L = LOWLINE	3 = HD DODGE 2WD 6 = Lt. Duty DODGE 4WD 2 = Med. Duty DODGE 2WD 7 = Med. Duty DODGE 4WD	55 = Wagon 140" 54 = Wagon 118" 52 = Wagon 140" 51 = Wagon 118" 12 = Van 140" 11 = Van 118" 06 = Front Section 158" 14 = Van 118" 15 = Van 140" 16 = Van 158" 56 = Wagon 158" 01 = Chassis Forward Control 118" 02 = Chassis Forward Control 140"	EX8 = Engine-2.7L I5 Mercedes Turbo Diesel	DGJ = Transmission-5-Spd. Automatic,W5A580

Intake Manifold
Figure 2.7LD-HO-810

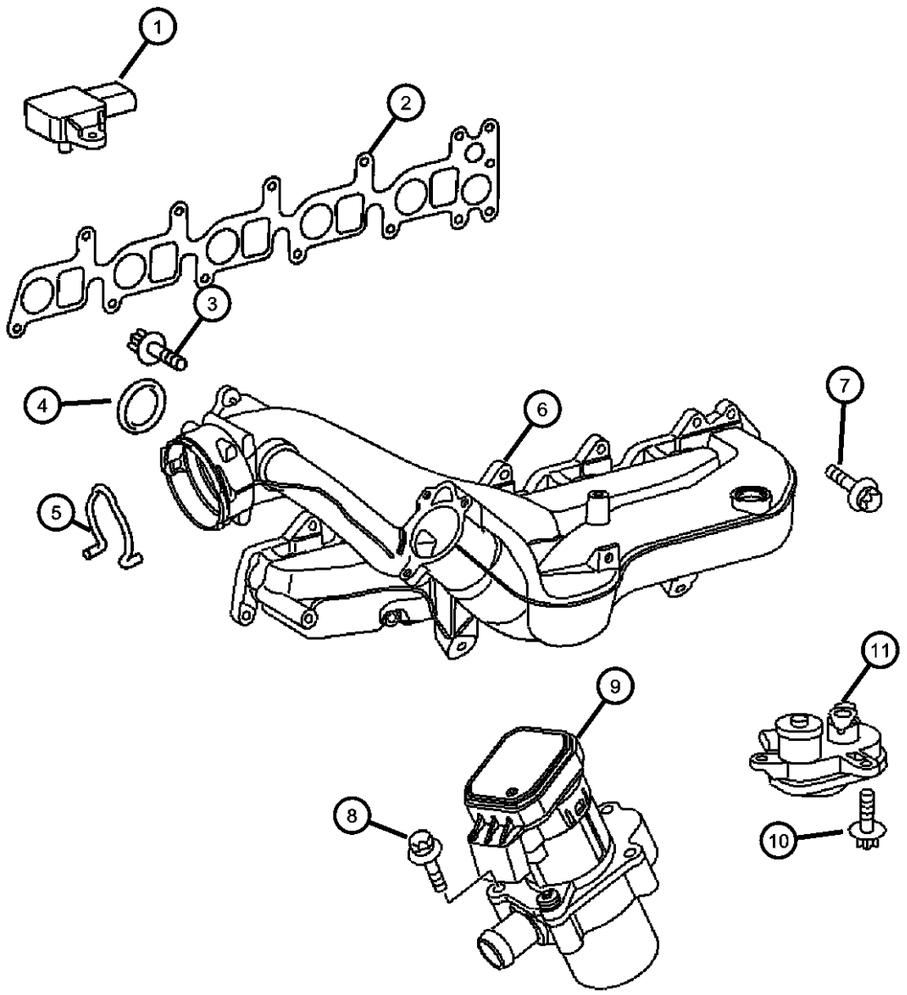

ITEM	PART NUMBER	QTY	LINE	SERIES	BODY	ENGINE	TRANS	TRIM	DESCRIPTION
NOTES:									
Sales Codes:									
1									SENSOR, Coolant Level
	05120509AA	1	2, 6						
		1	3, 7						
2	05080324AA	1				EX8			GASKET, Intake Manifold
3	06104005AA	2				EX8			SCREW
4	05137197AA	1				EX8			GASKET, EGR Valve
5	05080427AA	1							SPRING
6	05136769AA	1				EX8			MANIFOLD, Intake
7	05073903AA	8				EX8			SCREW
8	06104008AA	8				EX8			SCREW
9	05117525AA	1				EX8			VALVE
10	06104005AA	2				EX8			SCREW
11	05135893AA	1							MOTOR, Air Idle Speed

SPRINTER (VA)

SERIES	LINE	BODY	ENGINE	TRANSMISSION
L = LOWLINE	3 = HD DODGE 2WD 6 = Lt. Duty DODGE 4WD 2 = Med. Duty DODGE 2WD 7 = Med. Duty DODGE 4WD	55 = Wagon 140" 54 = Wagon 118" 52 = Wagon 140" 51 = Wagon 118" 12 = Van 140" 11 = Van 118" 06 = Front Section 158" 14 = Van 118" 15 = Van 140" 16 = Van 158" 56 = Wagon 158" 01 = Chassis Forward Control 118" 02 = Chassis Forward Control 140"	EX8 = Engine-2.7L I5 Mercedes Turbo Diesel	DGJ = Transmission-5-Spd. Automatic,W5A580

Exhaust Manifold
Figure 2.7LD-HO-820

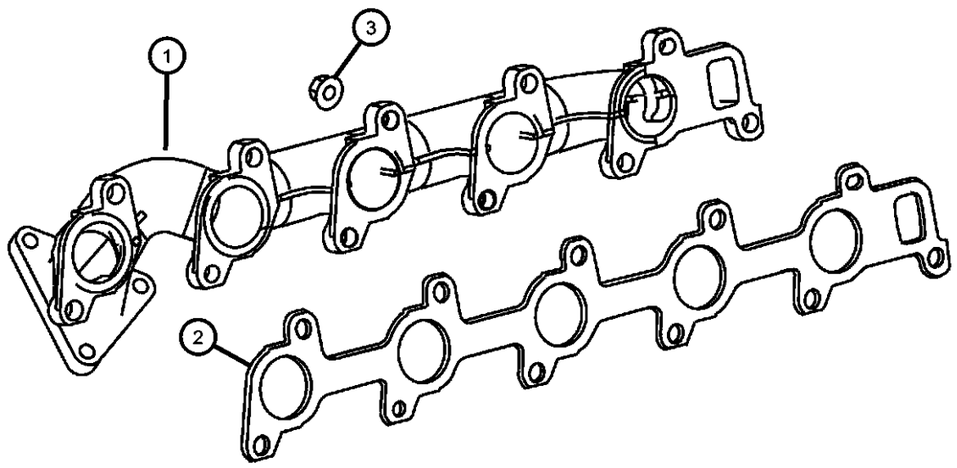

ITEM	PART NUMBER	QTY	LINE	SERIES	BODY	ENGINE	TRANS	TRIM	DESCRIPTION

NOTE:
Sales Codes:

1	05117523AA	1				EX8			MANIFOLD, Exhaust
2	05117528AA	1				EX8			GASKET, Exhaust Manifold
3	06104729AA	11				EX8			NUT

SPRINTER (VA)

SERIES	LINE	BODY	ENGINE	TRANSMISSION
L = LOWLINE	3 = HD DODGE 2WD 6 = Lt. Duty DODGE 4WD 2 = Med. Duty DODGE 2WD 7 = Med. Duty DODGE 4WD	55 = Wagon 140" 54 = Wagon 118" 52 = Wagon 140" 51 = Wagon 118" 12 = Van 140" 11 = Van 118" 06 = Front Section 158" 14 = Van 118" 15 = Van 140" 16 = Van 158" 56 = Wagon 158" 01 = Chassis Forward Control 118" 02 = Chassis Forward Control 140"	EX8 = Engine-2.7L I5 Mercedes Turbo Diesel	DGJ = Transmission-5-Spd. Automatic,W5A580

Crankcase Ventilation
Figure 2.7LD-HO-910

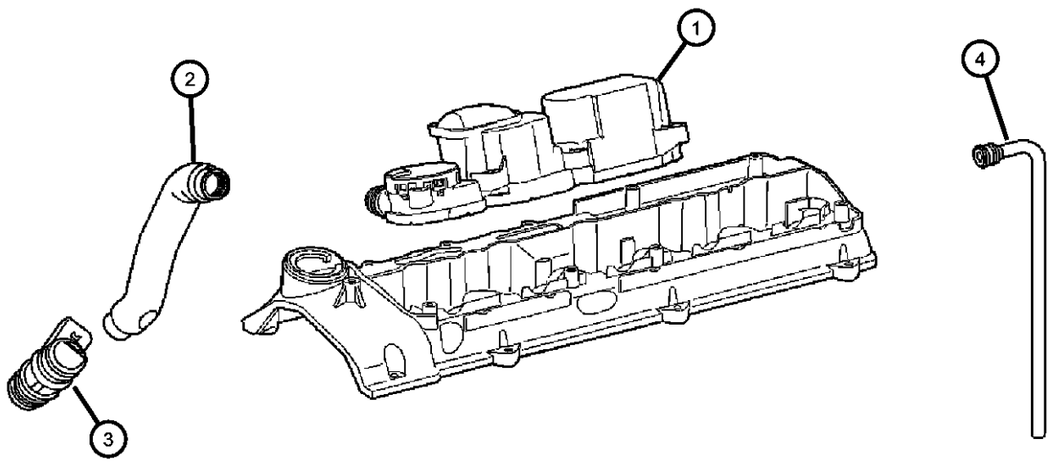

ITEM	PART NUMBER	QTY	LINE	SERIES	BODY	ENGINE	TRANS	TRIM	DESCRIPTION

NOTE:
Sales Codes:
[EX8] = 2.7L Inline 5 Cylinder High Output Turbo Diesel Engine - [OM647]

1	05137030AA	1				EX8			SEPERATOR, Oil
2	05117234AA	1				EX8			HOSE, Air Induction
3	05117289AA	1				EX8			TUBE, Crankcase Vent Valve
4	05117291AA	1				EX8			HOSE

SPRINTER (VA)

SERIES	LINE	BODY	ENGINE	TRANSMISSION
L = LOWLINE	3 = HD DODGE 2WD 6 = Lt. Duty DODGE 4WD 2 = Med. Duty DODGE 2WD 7 = Med. Duty DODGE 4WD	55 = Wagon 140" 54 = Wagon 118" 52 = Wagon 140" 51 = Wagon 118" 12 = Van 140" 11 = Van 118" 06 = Front Section 158" 14 = Van 118" 15 = Van 140" 16 = Van 158" 56 = Wagon 158" 01 = Chassis Forward Control 118" 02 = Chassis Forward Control 140"	EX8 = Engine-2.7L I5 Mercedes Turbo Diesel	DGJ = Transmission-5-Spd. Automatic,W5A580

Group - 11

Exhaust

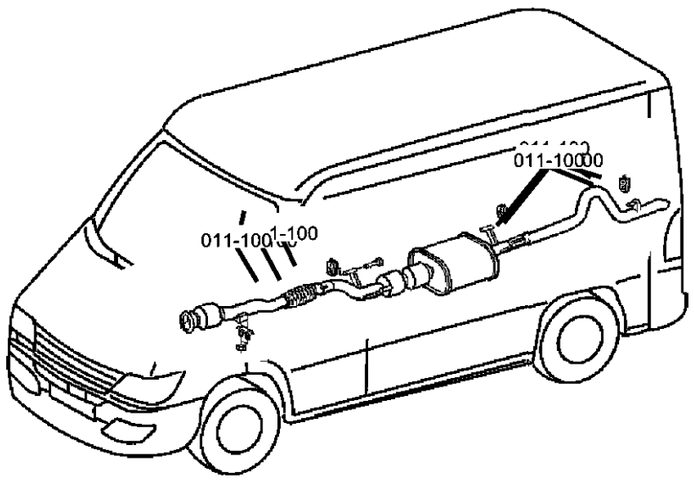

011-100 Exhaust System 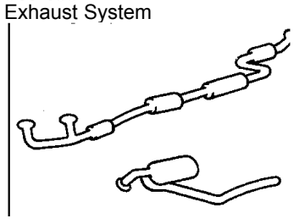	**011-200** Heat Shields 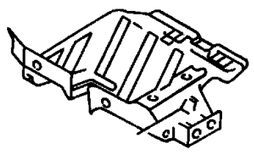		

Group - 11 Exhaust

Illustration Title — Group-Fig. No.

Exhaust System
Exhaust System ..... Fig. 11 - 110

Heat Shields
Heat Shields Exhaust ..... Fig. 11 - 210

Exhaust System
Figure 11-110

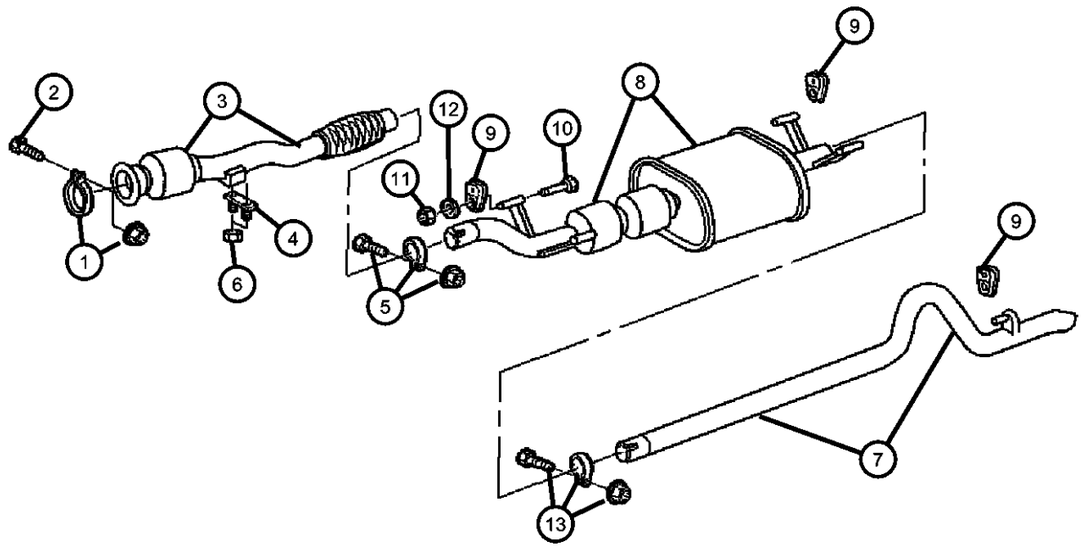

ITEM	PART NUMBER	QTY	LINE	SERIES	BODY	ENGINE	TRANS	TRIM	DESCRIPTION
Note; Sales Codes; [EX9] = 2.7L Inline 5 Cylinder Mercedes Turbo Diesel [5AC] = 118 Inch Wheel Base [5AE] = 140 Inch Wheel Base [5AF] = 158 Inch Wheel Base									
1									CLAMP, Exhaust
	05119830AB	1	2, 6	L	11, 12, 14, 15, 16				
	05135685AA	1	2, 6	L	01, 02, 06	EX8			
		1	2, 6	L	11, 12, 14, 15, 16	EX8			
		1	2, 6	L	51, 52, 54, 55, 56	EX8			
		1	3, 7	L	02, 06	EX8			
		1	3, 7	L	12, 15, 16	EX8			
2	06104027AA	2		L		EX8			SCREW
3									PIPE, Exhaust
	05119764AA	1	2, 6	L	01, 02, 06	EX8, EX9			
		1	2, 6	L	11, 12, 14, 15, 16	EX8, EX9			
		1	2, 6	L	51, 52, 54, 55, 56	EX8, EX9			
		1	3, 7	L	02, 06	EX8, EX9			
		1	3, 7	L	12, 15, 16	EX8, EX9			
4									BRACKET, Exhaust
	05119943AA	1	2, 6	L	11, 12, 14, 15, 16				
		1	2, 6	L	51, 52, 54, 55, 56				
		1	3, 7	L	12, 15, 16				
		1	2, 6	L	01, 02, 06	EX8, EX9			
5									CLAMP, 60MM, SPRINTER
	05103923AA	1	2, 6	L	11, 12, 14, 15, 16				

SPRINTER (VA)

SERIES	LINE	BODY	ENGINE	TRANSMISSION
L = LOWLINE	3 = HD DODGE 2WD 6 = Lt. Duty DODGE 4WD 2 = Med. Duty DODGE 2WD 7 = Med. Duty DODGE 4WD	55 = Wagon 140" 54 = Wagon 118" 52 = Wagon 140" 51 = Wagon 118" 12 = Van 140" 11 = Van 118" 06 = Front Section 158" 14 = Van 118" 15 = Van 140" 16 = Van 158" 56 = Wagon 158" 01 = Chassis Forward Control 118" 02 = Chassis Forward Control 140"	EX8 = Engine-2.7L I5 Mercedes Turbo Diesel	DGJ = Transmission-5-Spd. Automatic,W5A580

Exhaust System
Figure 11-110

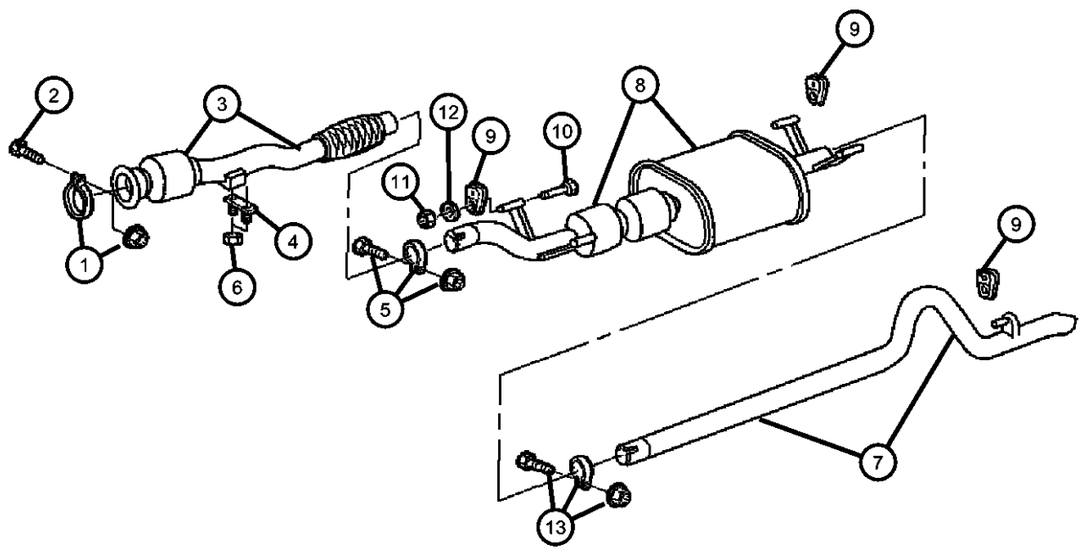

ITEM	PART NUMBER	QTY	LINE	SERIES	BODY	ENGINE	TRANS	TRIM	DESCRIPTION
		1	2, 6	L	51, 52, 54, 55, 56				
6									NUT, Catalytic Converter Mounting
	05101226AA	2	2, 6	L	01, 02, 06				
		2	2, 6	L	11, 12, 14, 15, 16				
		2	2, 6	L	51, 52, 54, 55, 56				
7									PIPE, Tail
	05104107AA	1	2, 6	L	02				
		1	2, 6	L	12, 15				
		1	2, 6	L	52, 55				
	05104108AA	1	2, 6	L	16				
		1	2, 6	L	56				
	05119778AA	1	2, 6	L	01				
		1	2, 6	L	11, 14				
		1	2, 6	L	51, 54				
	05119791AA	1	3, 7	L	12, 15				
	05119793AA	1	3, 7	L	16				
8									MUFFLER, Exhaust
	05119762AA	1	2, 6	L	11, 12, 14, 15, 16	EX8			
		1	2, 6	L	51, 52, 54, 55, 56	EX8			
		1	3, 7	L	12, 15, 16	EX8			
		1	2, 6	L	01, 02, 06	EX8			
9									INSULATOR, Exhaust
	05104109AA	4	2, 6	L	11, 12, 14, 15, 16				
		4	2, 6	L	51, 52, 54, 55, 56				
		4	3, 7	L	12, 15, 16				

SPRINTER (VA)

SERIES	LINE	BODY	ENGINE	TRANSMISSION
L = LOWLINE	3 = HD DODGE 2WD 6 = Lt. Duty DODGE 4WD 2 = Med. Duty DODGE 2WD 7 = Med. Duty DODGE 4WD	55 = Wagon 140" 54 = Wagon 118" 52 = Wagon 140" 51 = Wagon 118" 12 = Van 140" 11 = Van 118" 06 = Front Section 158" 14 = Van 118" 15 = Van 140" 16 = Van 158" 56 = Wagon 158" 01 = Chassis Forward Control 118" 02 = Chassis Forward Control 140"	EX8 = Engine-2.7L I5 Mercedes Turbo Diesel	DGJ = Transmission-5-Spd. Automatic,W5A580

Exhaust System
Figure 11-110

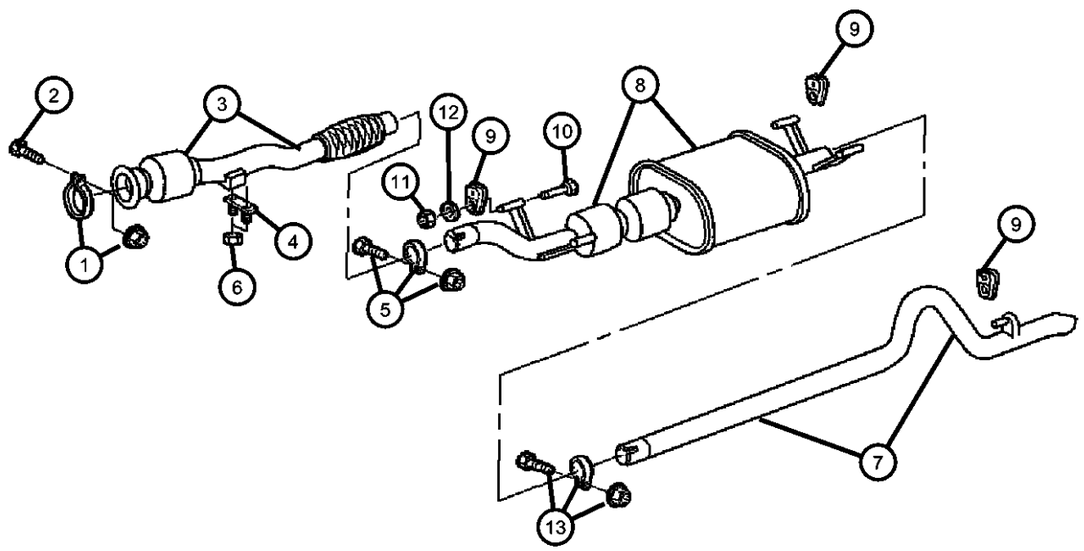

ITEM	PART NUMBER	QTY	LINE	SERIES	BODY	ENGINE	TRANS	TRIM	DESCRIPTION
10									SCREW
	05104653AA	1	2, 6	L	01, 02, 06				
		1	2, 6	L	11, 12, 14, 15, 16				
		1	2, 6	L	51, 52, 54, 55, 56				
		1	3, 7	L	12, 15, 16				
11									NUT, Hex
	05097683AA	1	2, 6	L	11, 12, 14, 15, 16				
		1	2, 6	L	51, 52, 54, 55, 56				
		1	3, 7	L	12, 15, 16				
12									WASHER
	05133908AA	1	3, 7	L	12, 15, 16				
		1	2, 6	L	01, 02, 06				
		1	2, 6	L	11, 12, 14, 15, 16				
		1	2, 6	L	51, 52, 54, 55, 56				
13									CLAMP, Exhaust
	05119830AA	1	2, 6	L	01, 02, 06	EX8			
	05127230AA	1	2, 6	L	11, 12, 14, 15, 16				
		1	2, 6	L	51, 52, 54, 55, 56				
		1	3, 7	L	12, 15, 16				
-14									BRACKET, Exhaust
	05119807AA	1	2, 6	L	11, 12, 14, 15, 16				
		1	2, 6	L	51, 52, 54, 55, 56				
	05119931AA	1	3, 7	L	12, 15, 16				Rear Pipe to Frame

SPRINTER (VA)

SERIES	LINE	BODY	ENGINE	TRANSMISSION
L = LOWLINE	3 = HD DODGE 2WD 6 = Lt. Duty DODGE 4WD 2 = Med. Duty DODGE 2WD 7 = Med. Duty DODGE 4WD	55 = Wagon 140" 54 = Wagon 118" 52 = Wagon 140" 51 = Wagon 118" 12 = Van 140" 11 = Van 118" 06 = Front Section 158" 14 = Van 118" 15 = Van 140" 16 = Van 158" 56 = Wagon 158" 01 = Chassis Forward Control 118" 02 = Chassis Forward Control 140"	EX8 = Engine-2.7L I5 Mercedes Turbo Diesel	DGJ = Transmission-5-Spd. Automatic,W5A580

Exhaust System
Figure 11-110

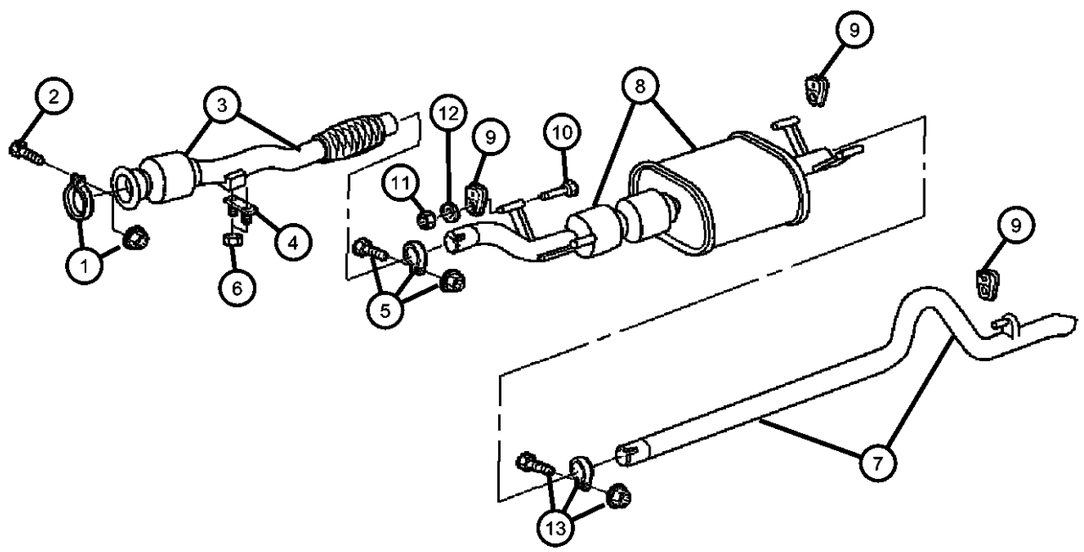

ITEM	PART NUMBER	QTY	LINE	SERIES	BODY	ENGINE	TRANS	TRIM	DESCRIPTION
		1	2, 6	L	01, 02, 06				
-15									SEAL, Exhaust
	05135684AA	1	2, 6	L	51, 52, 54, 55, 56	EX8			
		1	3, 7	L	02, 06	EX8			
		1	3, 7	L	12, 15, 16	EX8			
		1	2, 6	L	01, 02, 06	EX8			
		1	2, 6	L	11, 12, 14, 15, 16	EX8			
-16	05117529AA	1		L		EX8			GASKET, Exhaust Manifold To Turbo

SPRINTER (VA)

SERIES	LINE	BODY	ENGINE	TRANSMISSION
L = LOWLINE	3 = HD DODGE 2WD 6 = Lt. Duty DODGE 4WD 2 = Med. Duty DODGE 2WD 7 = Med. Duty DODGE 4WD	55 = Wagon 140" 54 = Wagon 118" 52 = Wagon 140" 51 = Wagon 118" 12 = Van 140" 11 = Van 118" 06 = Front Section 158" 14 = Van 118" 15 = Van 140" 16 = Van 158" 56 = Wagon 158" 01 = Chassis Forward Control 118" 02 = Chassis Forward Control 140"	EX8 = Engine-2.7L I5 Mercedes Turbo Diesel	DGJ = Transmission-5-Spd. Automatic,W5A580

Heat Shields Exhaust
Figure 11-210

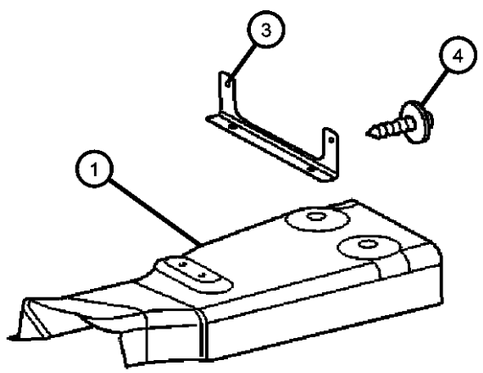

ITEM	PART NUMBER	QTY	LINE	SERIES	BODY	ENGINE	TRANS	TRIM	DESCRIPTION
Sales Codes:EX8=2.7L I5 MERCEDES-BENZ DGJ=TRANSMISSION - 5-SPD AUTO									
1									SHIELD, Heat
	05135681AA	1	2, 6	L	51, 52, 54, 55, 56	EX8			
		1	2, 6	L	11, 12, 14, 15, 16	EX8			
		1	2, 6	L	01, 02, 06	EX8			
		1	3, 7	L	12, 15, 16	EX8			
-2									SCREW, Exhaust Bracket Mounting, Shield Mounting
	05125748AA	2	2, 6	L	01, 02, 06				
		4	2, 6	L	11, 12, 14, 15, 16				
		4	2, 6	L	51, 52, 54, 55, 56				
		4	3, 7	L	12, 15, 16				
3									BRACKET, Exhaust
	05119848AA	1	3, 7	L	12, 15, 16				
		1	2, 6	L	01, 02, 06				
		1	2, 6	L	11, 12, 14, 15, 16				
		1	2, 6	L	51, 52, 54, 55, 56				
4									SCREW, Exhaust Bracket Mounting
	05125748AA	2	2, 6	L	01, 02, 06				
		2	2, 6	L	11, 12, 14, 15, 16				
		2	2, 6	L	51, 52, 54, 55, 56				
		2	3, 7	L	12, 15, 16				

SPRINTER (VA)

SERIES	LINE	BODY	ENGINE	TRANSMISSION
L = LOWLINE	3 = HD DODGE 2WD 6 = Lt. Duty DODGE 4WD 2 = Med. Duty DODGE 2WD 7 = Med. Duty DODGE 4WD	55 = Wagon 140" 54 = Wagon 118" 52 = Wagon 140" 51 = Wagon 118" 12 = Van 140" 11 = Van 118" 06 = Front Section 158" 14 = Van 118" 15 = Van 140" 16 = Van 158" 56 = Wagon 158" 01 = Chassis Forward Control 118" 02 = Chassis Forward Control 140"	EX8 = Engine-2.7L I5 Mercedes Turbo Diesel	DGJ = Transmission-5-Spd. Automatic,W5A580

Group - 13

Frames and Bumpers

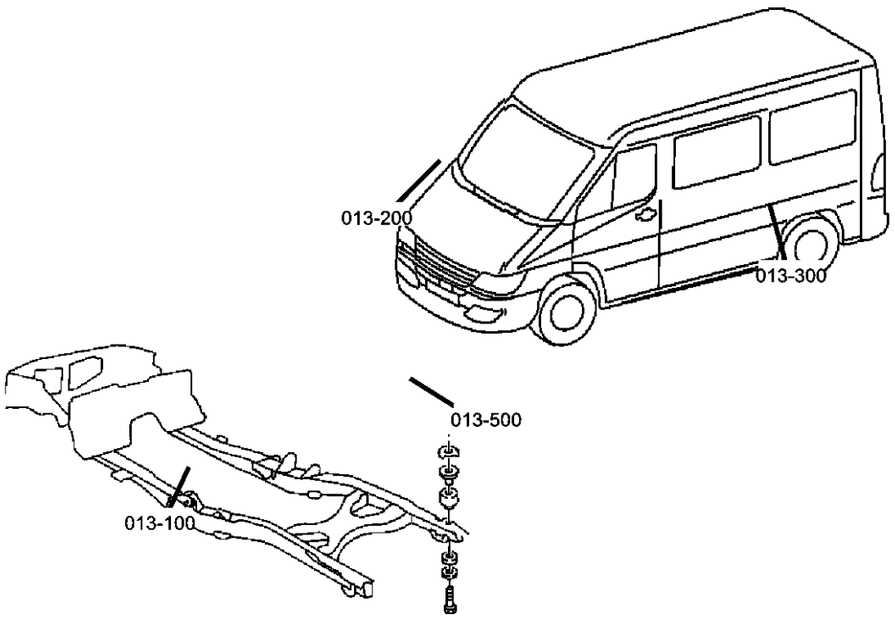

013-100 Frames	013-200 Front Bumper and Fascia	013-300 Rear Bumper and Fascia	013-600 Trailer Tow
	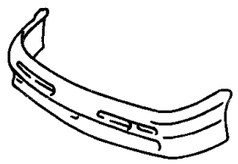		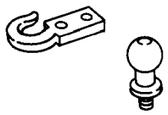

Group - 13 Frames and Bumpers

Illustration Title — Group-Fig. No.

Frames
Front Frame Rails ..... Fig. 13 - 105
Side Frame Rails and Crossmembers 2500 ..... Fig. 13 - 110
Side Frame Rails and Crossmembers 3500 ..... Fig. 13 - 120
Brackets, Frame To Body Supports ..... Fig. 13 - 130

Front Bumper and Fascia
Bumper, Front ..... Fig. 13 - 230

Rear Bumper and Fascia
Bumper, Rear ..... Fig. 13 - 320

Trailer Tow
Rear Hitch ..... Fig. 13 - 610
Trailer Tow ..... Fig. 13 - 620

Front Frame Rails
Figure 13-105

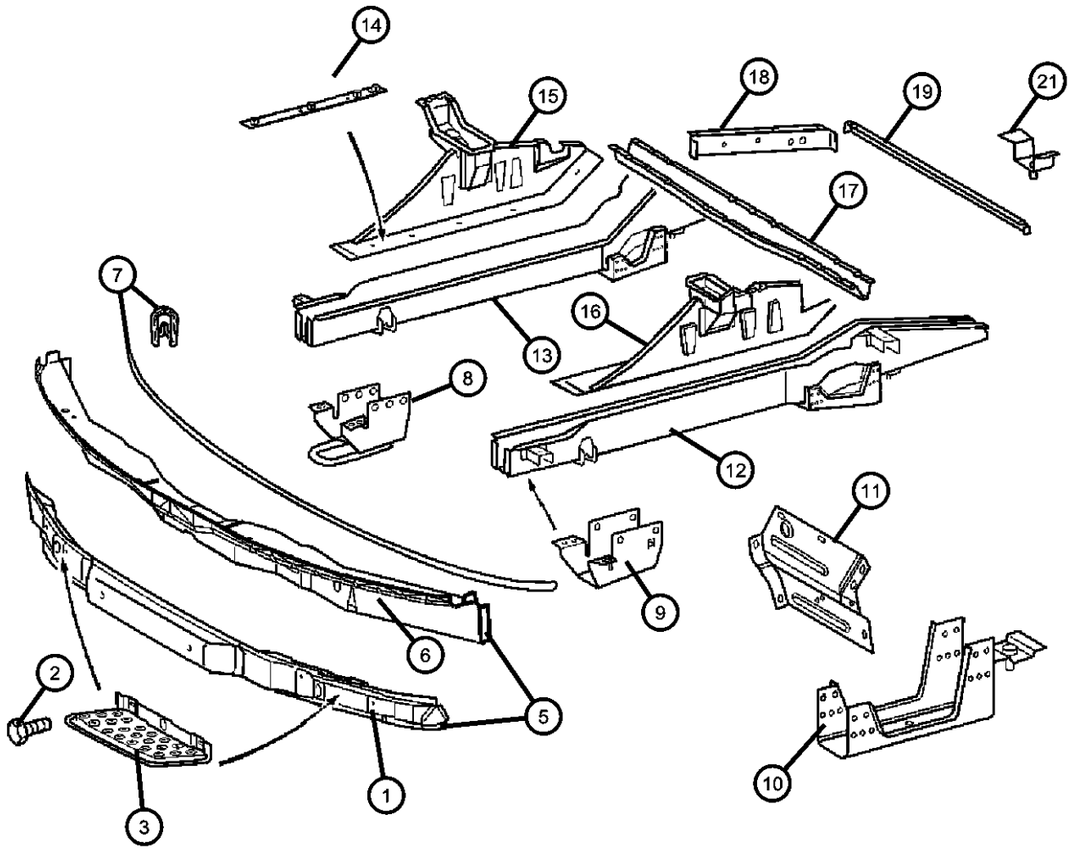

ITEM	PART NUMBER	QTY	LINE	SERIES	BODY	ENGINE	TRANS	TRIM	DESCRIPTION
1									COVER, Crossmember
	05133848AA	1	2, 6	L	01, 02, 06				
		1	2, 6	L	11, 12, 14, 15, 16				
		1	2, 6	L	51, 52, 54, 55, 56				
		1	3, 7	L	02, 06				
		1	3, 7	L	12, 15, 16				
2									SCREW
	05073723AB	4	2, 6	L	01, 02, 06				
		4	2, 6	L	11, 12, 14, 15, 16				
		4	2, 6	L	51, 52, 54, 55, 56				
		4	3, 7	L	02, 06				
		4	3, 7	L	12, 15, 16				
3									STEP, Left Side
	05104136AA	1	2, 6	L	01, 02, 06				
		1	2, 6	L	11, 12, 14, 15, 16				
		1	2, 6	L	51, 52, 54, 55, 56				
		1	3, 7	L	02, 06				
		1	3, 7	L	12, 15, 16				
-4									STEP, Right Side
	05104137AA	1	2, 6	L	01, 02, 06				
		1	2, 6	L	11, 12, 14, 15, 16				
		1	2, 6	L	51, 52, 54, 55, 56				
		1	3, 7	L	02, 06				
		1	3, 7	L	12, 15, 16				
5									REINFORCEMENT, Front Bumper

SPRINTER (VA)

SERIES	LINE	BODY	ENGINE	TRANSMISSION
L = LOWLINE	3 = HD DODGE 2WD 6 = Lt. Duty DODGE 4WD 2 = Med. Duty DODGE 2WD 7 = Med. Duty DODGE 4WD	55 = Wagon 140" 54 = Wagon 118" 52 = Wagon 140" 51 = Wagon 118" 12 = Van 140" 11 = Van 118" 06 = Front Section 158" 14 = Van 118" 15 = Van 140" 16 = Van 158" 56 = Wagon 158" 01 = Chassis Forward Control 118" 02 = Chassis Forward Control 140"	EX8 = Engine-2.7L I5 Mercedes Turbo Diesel	DGJ = Transmission-5-Spd. Automatic,W5A580

Front Frame Rails
Figure 13-105

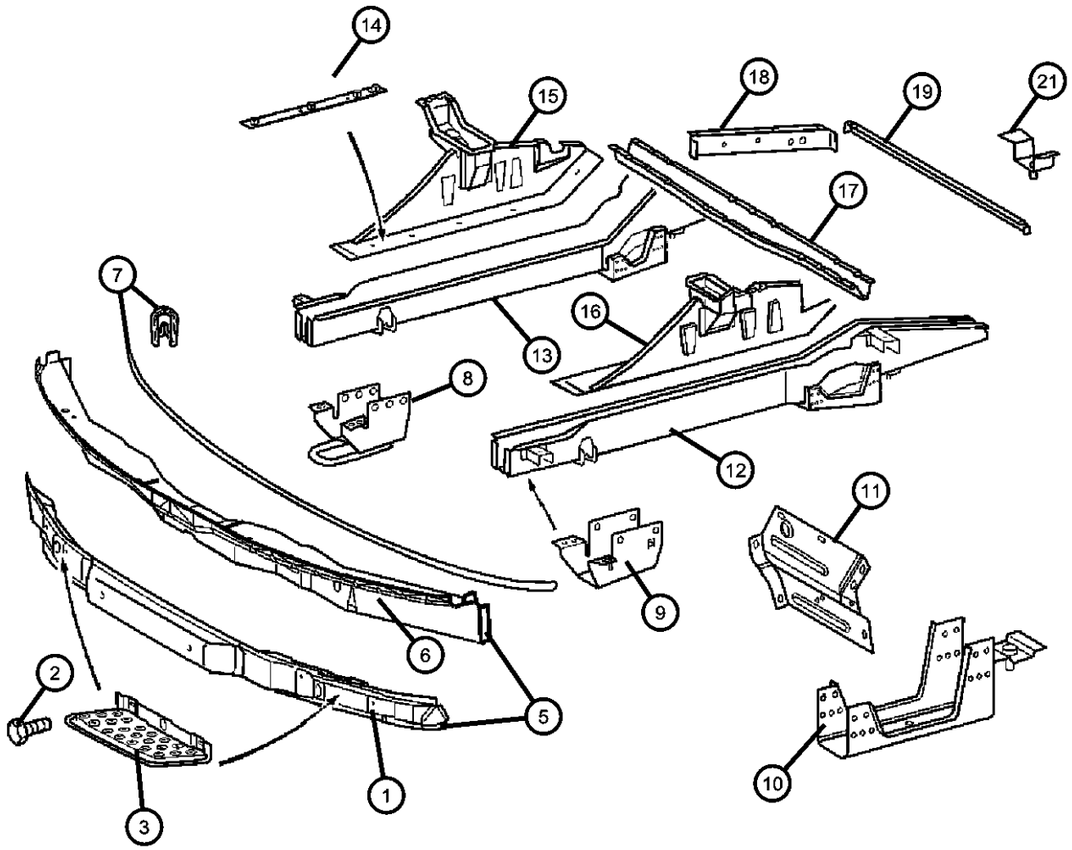

ITEM	PART NUMBER	QTY	LINE	SERIES	BODY	ENGINE	TRANS	TRIM	DESCRIPTION
	05104054AA	1	2, 6	L	01, 02, 06				
		1	2, 6	L	11, 12, 14, 15, 16				
		1	6, 2	L	51, 52, 54, 55, 56				
		1	3, 7	L	02, 06				
		1	3, 7	L	12, 15, 16				
6									REINFORCEMENT, Front Bumper
	05104054AA	1	3, 7	L	02, 06				
		1	2, 6	L	01, 02, 06				
		1	2, 6	L	11, 12, 14, 15, 16				
		1	2, 6	L	51, 52, 54, 55, 56				
		1	3, 7	L	12, 15, 16				
7									EDGE GUARD SECTION, NONE, SPRINTER
	05123544AA	1	2, 6	L	11, 12, 14, 15, 16				
		1	2, 6	L	56, 51, 52, 54, 55				
		1	3, 7	L	12, 15, 16				
8									TOW HOOK, AT RIGHT SIDE MEMBER, SPRINTER
	05104053AA	1	2, 6	L	11, 12, 14, 15, 16				
		1	2, 6	L	51, 52, 54, 55, 56				
		1	3, 7	L	12, 15, 16				
9									BRACKET, Frame Rail
	05118517AA	1	2, 6	L	01, 02, 06				
		1	2, 6	L	11, 12, 14, 15, 16				
		1	3, 7	L	12, 15, 16				

SPRINTER (VA)

SERIES	LINE	BODY	ENGINE	TRANSMISSION
L = LOWLINE	3 = HD DODGE 2WD 6 = Lt. Duty DODGE 4WD 2 = Med. Duty DODGE 2WD 7 = Med. Duty DODGE 4WD	55 = Wagon 140" 54 = Wagon 118" 52 = Wagon 140" 51 = Wagon 118" 12 = Van 140" 11 = Van 118" 06 = Front Section 158" 14 = Van 118" 15 = Van 140" 16 = Van 158" 56 = Wagon 158" 01 = Chassis Forward Control 118" 02 = Chassis Forward Control 140"	EX8 = Engine-2.7L I5 Mercedes Turbo Diesel	DGJ = Transmission-5-Spd. Automatic,W5A580

Front Frame Rails
Figure 13-105

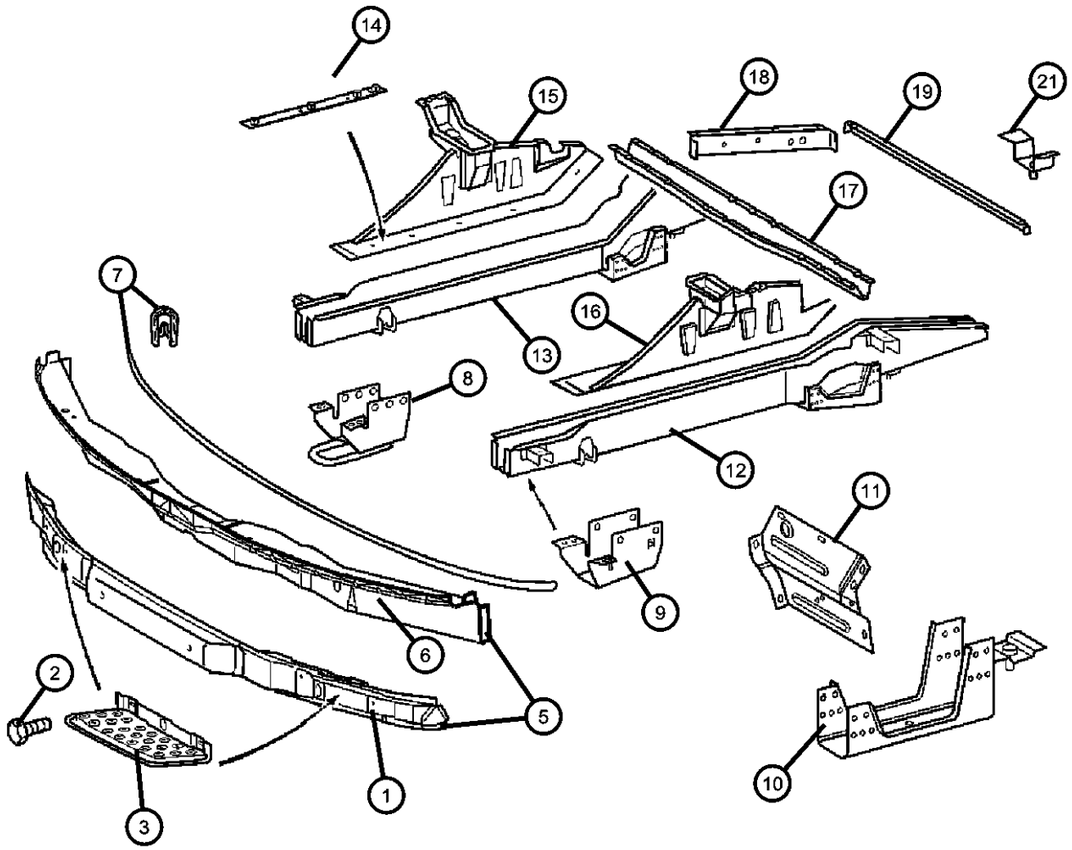

ITEM	PART NUMBER	QTY	LINE	SERIES	BODY	ENGINE	TRANS	TRIM	DESCRIPTION
		1	2, 6	L	51, 52, 54, 55, 56				
		1	3, 7	L	02, 06				
10									REINFORCEMENT, Front Side Rail
	05104033AA	1	2, 6	L	01, 02, 06				Right
		1	2, 6	L	11, 12, 14, 15, 16				Right
		1	2, 6	L	51, 52, 54, 55, 56				Right
		1	3, 7	L	02, 06				Right
	05117693AA	1	2, 6	L	01, 02, 06				Left
		1	2, 6	L	15, 16, 11, 12, 14				Left
		1	2, 6	L	51, 52, 54, 55, 56				Left
		1	3, 7	L	02, 06				Left
		1	3, 7	L	12, 15, 16				Left
11									REINFORCEMENT, Front Side Rail
	05118588AA	1	3, 7	L	12, 15, 16				
		1	2, 6	L	01, 02, 06				
		1	2, 6	L	11, 12, 14, 15, 16				
		1	2, 6	L	51, 52, 54, 55, 56				
		1	3, 7	L	02, 06				
12									SIDE MEMBER, LEFT, SPRINTER
	05104055AA	1	2, 6	L	11, 12, 14, 15, 16				
		1	2, 6	L	51, 52, 54, 55, 56				
		1	3, 7	L	12, 15, 16				
13									SIDE MEMBER, RIGHT, SPRINTER

SPRINTER (VA)

SERIES	LINE	BODY	ENGINE	TRANSMISSION
L = LOWLINE	3 = HD DODGE 2WD 6 = Lt. Duty DODGE 4WD 2 = Med. Duty DODGE 2WD 7 = Med. Duty DODGE 4WD	55 = Wagon 140" 54 = Wagon 118" 52 = Wagon 140" 51 = Wagon 118" 12 = Van 140" 11 = Van 118" 06 = Front Section 158" 14 = Van 118" 15 = Van 140" 16 = Van 158" 56 = Wagon 158" 01 = Chassis Forward Control 118" 02 = Chassis Forward Control 140"	EX8 = Engine-2.7L I5 Mercedes Turbo Diesel	DGJ = Transmission-5-Spd. Automatic,W5A580

Front Frame Rails
Figure 13-105

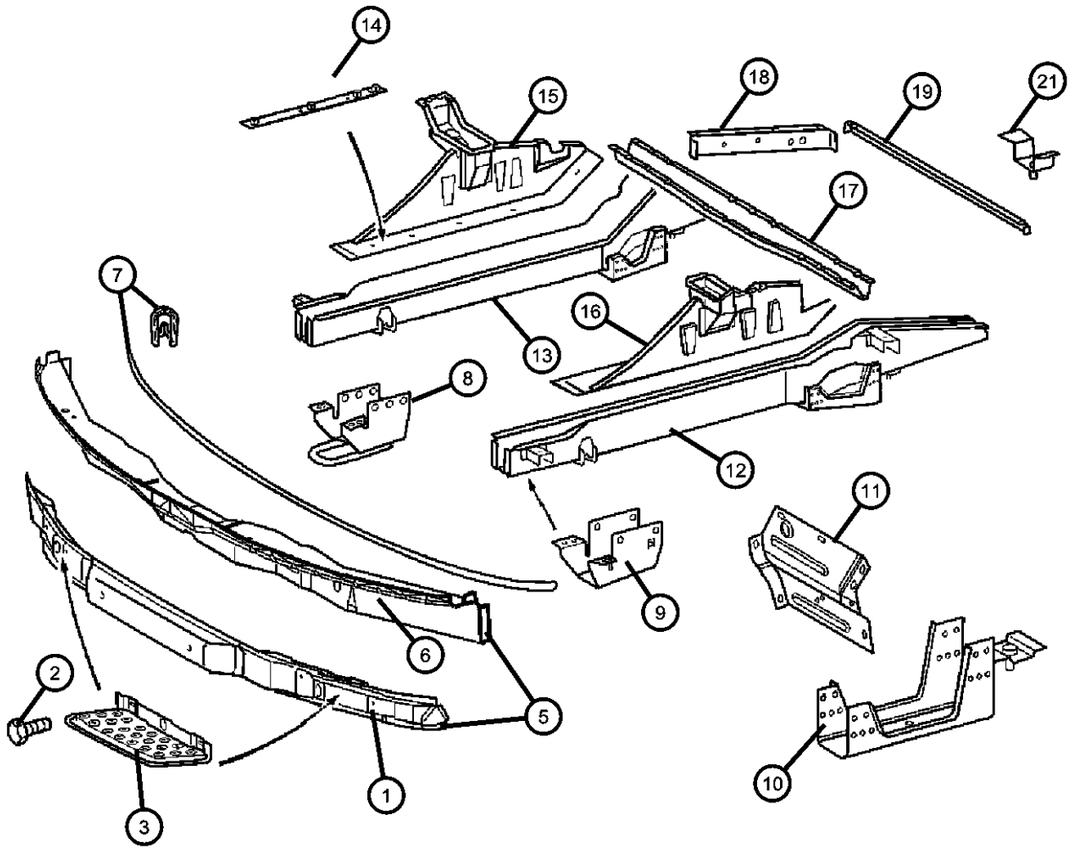

ITEM	PART NUMBER	QTY	LINE	SERIES	BODY	ENGINE	TRANS	TRIM	DESCRIPTION
	05104052AA	1	2, 6	L	16, 11, 12, 14, 15				
		1	2, 6	L	51, 52, 54, 55, 56				
		1	3, 7	L	12, 15, 16				
14									REINFORCEMENT, Rail Front
	05118290AA	2	2, 6	L	01, 02, 06				
		2	2, 6	L	11, 12, 14, 15, 16				
		2	2, 6	L	51, 52, 54, 55, 56				
		2	3, 7	L	02, 06				
		2	3, 7	L	12, 15, 16				
15									SUPPORT, Under Body Hold Down
	05118252AA	1	3, 7	L	02, 06				Right
		1	3, 7	L	12, 15, 16				Right
		1	2, 6	L	01, 02, 06				Right
		1	2, 6	L	11, 12, 14, 15, 16				Right
		1	2, 6	L	51, 52, 54, 55, 56				Right
16									SUPPORT, Under Body Hold Down
	05104049AA	1	2, 6	L	01, 02, 06				Left
		1	2, 6	L	11, 12, 14, 15, 16				Left
		1	2, 6	L	51, 52, 54, 55, 56				Left
		1	3, 7	L	02, 06				Left
		1	3, 7	L	12, 15, 16				Left
17									CROSSMEMBER, Front Seat Retention
	05118385AA	1	2, 6	L	01, 02, 06				

SPRINTER (VA)

SERIES	LINE	BODY	ENGINE	TRANSMISSION
L = LOWLINE	3 = HD DODGE 2WD 6 = Lt. Duty DODGE 4WD 2 = Med. Duty DODGE 2WD 7 = Med. Duty DODGE 4WD	55 = Wagon 140" 54 = Wagon 118" 52 = Wagon 140" 51 = Wagon 118" 12 = Van 140" 11 = Van 118" 06 = Front Section 158" 14 = Van 118" 15 = Van 140" 16 = Van 158" 56 = Wagon 158" 01 = Chassis Forward Control 118" 02 = Chassis Forward Control 140"	EX8 = Engine-2.7L I5 Mercedes Turbo Diesel	DGJ = Transmission-5-Spd. Automatic,W5A580

Front Frame Rails
Figure 13-105

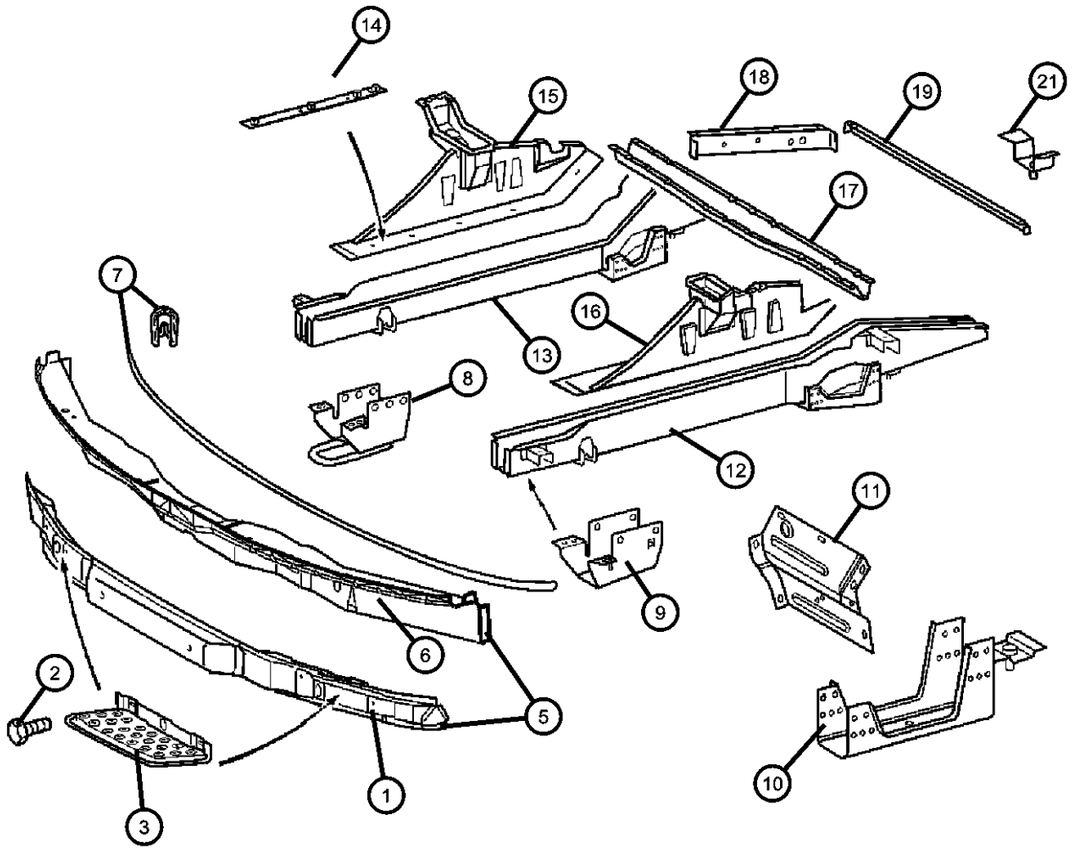

ITEM	PART NUMBER	QTY	LINE	SERIES	BODY	ENGINE	TRANS	TRIM	DESCRIPTION
		1	2, 6	L	11, 12, 14, 15, 16				
		1	2, 6	L	51, 52, 54, 55, 56				
		1	3, 7	L	02, 06				
		1	3, 7	L	12, 15, 16				
18									REINFORCEMENT, Wheelhouse
	05118015AA	2	2, 6	L	01, 02, 06				
		2	6, 2	L	11, 12, 14, 15, 16				
		2	2, 6	L	51, 52, 54, 55, 56				
		2	3, 7	L	02, 06				
		2	3, 7	L	12, 15, 16				
19									CROSSMEMBER, Front Floor
	05118091AA	1	2, 6	L	51, 52, 54, 55, 56				
		1	3, 7	L	02, 06				
		1	2, 6	L	01, 02, 06				
		1	2, 6	L	11, 12, 14, 15, 16				
		1	3, 7	L	12, 15, 16				
-20									BRACKET, Aux A/C And Heater Line
	05127245AA	1	2, 6	L	11, 12, 14, 15, 16				
		1	2, 6	L	51, 52, 54, 55, 56				
		1	3, 7	L	12, 15, 16				
21									BRACKET
	05127241AA	1	2, 6	L	11, 12, 14, 15, 16				

SPRINTER (VA)

SERIES	LINE	BODY	ENGINE	TRANSMISSION
L = LOWLINE	3 = HD DODGE 2WD 6 = Lt. Duty DODGE 4WD 2 = Med. Duty DODGE 2WD 7 = Med. Duty DODGE 4WD	55 = Wagon 140" 54 = Wagon 118" 52 = Wagon 140" 51 = Wagon 118" 12 = Van 140" 11 = Van 118" 06 = Front Section 158" 14 = Van 118" 15 = Van 140" 16 = Van 158" 56 = Wagon 158" 01 = Chassis Forward Control 118" 02 = Chassis Forward Control 140"	EX8 = Engine-2.7L I5 Mercedes Turbo Diesel	DGJ = Transmission-5-Spd. Automatic,W5A580

Front Frame Rails
Figure 13-105

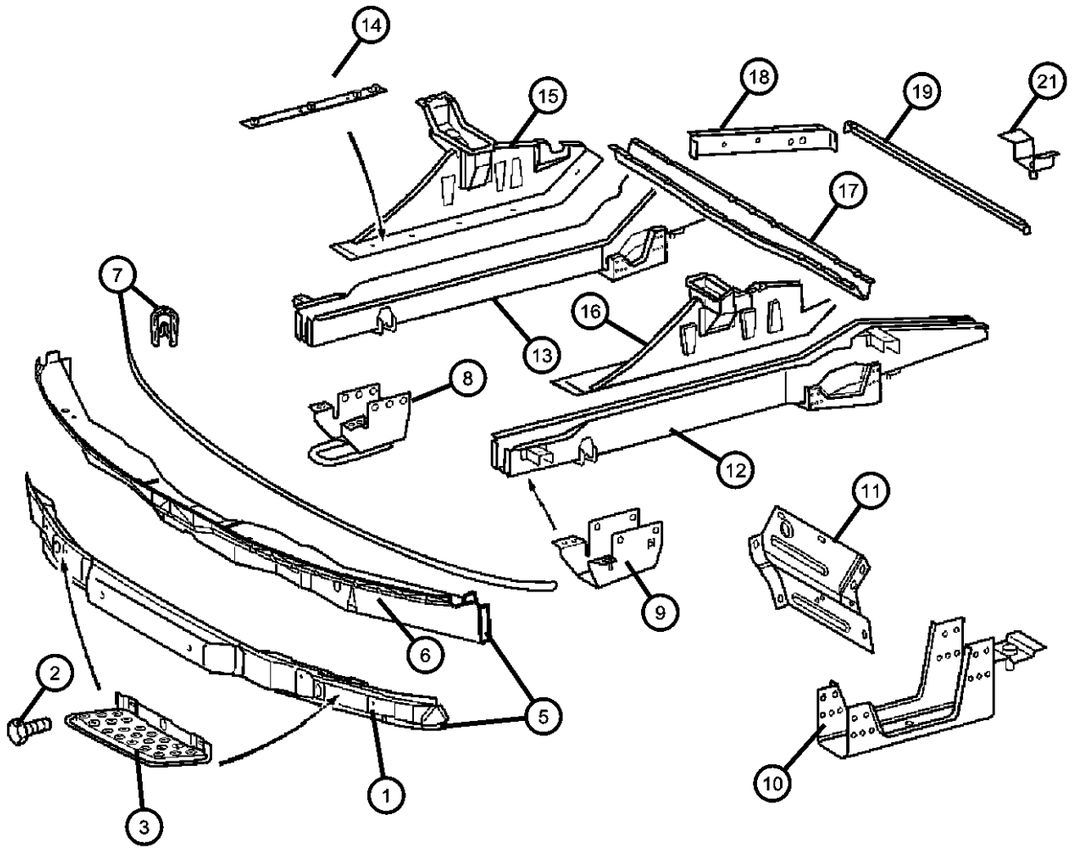

ITEM	PART NUMBER	QTY	LINE	SERIES	BODY	ENGINE	TRANS	TRIM	DESCRIPTION
		1	3, 7	L	12, 15, 16				
		1	2, 6	L	51, 52, 54, 55, 56				

SPRINTER (VA)

SERIES	LINE	BODY	ENGINE	TRANSMISSION
L = LOWLINE	3 = HD DODGE 2WD 6 = Lt. Duty DODGE 4WD 2 = Med. Duty DODGE 2WD 7 = Med. Duty DODGE 4WD	55 = Wagon 140" 54 = Wagon 118" 52 = Wagon 140" 51 = Wagon 118" 12 = Van 140" 11 = Van 118" 06 = Front Section 158" 14 = Van 118" 15 = Van 140" 16 = Van 158" 56 = Wagon 158" 01 = Chassis Forward Control 118" 02 = Chassis Forward Control 140"	EX8 = Engine-2.7L I5 Mercedes Turbo Diesel	DGJ = Transmission-5-Spd. Automatic,W5A580

Side Frame Rails and Crossmembers 2500
Figure 13-110

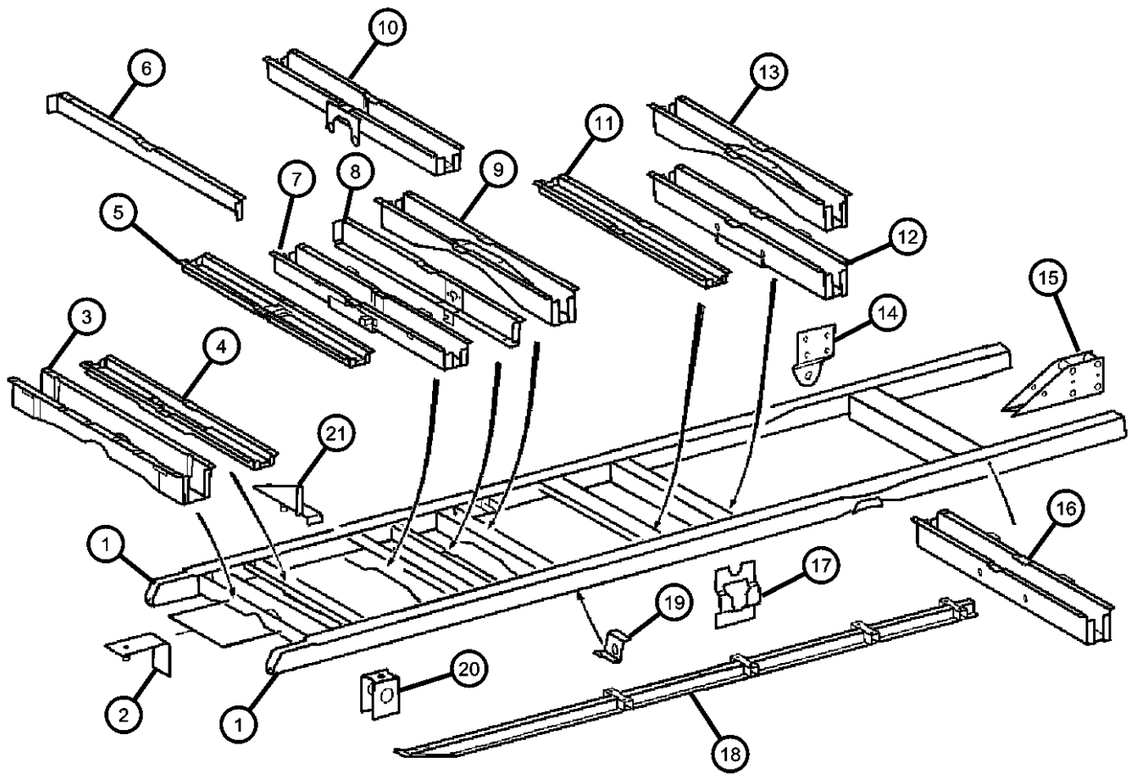

ITEM	PART NUMBER	QTY	LINE	SERIES	BODY	ENGINE	TRANS	TRIM	DESCRIPTION
1									RAIL, Frame Side
	05104554AA	1	2, 6	L	16				Right
		1	2, 6	L	56				Right
	05104555AA	1	2, 6	L	16				Left
		1	2, 6	L	56				Left
	05118059AA	1	3, 7	L	02				Right
	05118063AA	1	3, 7	L	06				Right
	05118078AA	1	3, 7	L	02				Left
	05118082AA	1	3, 7	L	06				Left
2									BRACKET, Frame
	05127243AA	1	2, 6	L	14, 15, 16, 11, 12				
		1	2, 6	L	51, 52, 54, 55, 56				
3									CROSSMEMBER, Front Frame
	05118162AA	1	2, 6	L	11, 12, 14, 15, 16				
		1	2, 6	L	51, 52, 54, 55, 56				
4									CROSSMEMBER, Front Frame
	05118152AA	1	2, 6	L	01, 06				
		1	2, 6	L	11, 14, 16				
		1	2, 6	L	51, 54, 56				
		1	3, 7	L	16				
5	05118142AA	1	2, 6	L	51, 52, 54, 55, 56				CROSSMEMBER, Front Frame
6	05118142AA	1							CROSSMEMBER, Front Frame, (NOT SERVICED)
7									CROSSMEMBER, Front Frame
	05118097AA	1	2, 6	L	11, 12, 14, 15, 16				
		1	2, 6	L	51, 52, 54, 55, 56				

SPRINTER (VA)

SERIES	LINE	BODY	ENGINE	TRANSMISSION
L = LOWLINE	3 = HD DODGE 2WD 6 = Lt. Duty DODGE 4WD 2 = Med. Duty DODGE 2WD 7 = Med. Duty DODGE 4WD	55 = Wagon 140" 54 = Wagon 118" 52 = Wagon 140" 51 = Wagon 118" 12 = Van 140" 11 = Van 118" 06 = Front Section 158" 14 = Van 118" 15 = Van 140" 16 = Van 158" 56 = Wagon 158" 01 = Chassis Forward Control 118" 02 = Chassis Forward Control 140"	EX8 = Engine-2.7L I5 Mercedes Turbo Diesel	DGJ = Transmission-5-Spd. Automatic,W5A580

AR = use ase required - = Non illustrrated part

Side Frame Rails and Crossmembers 2500
Figure 13-110

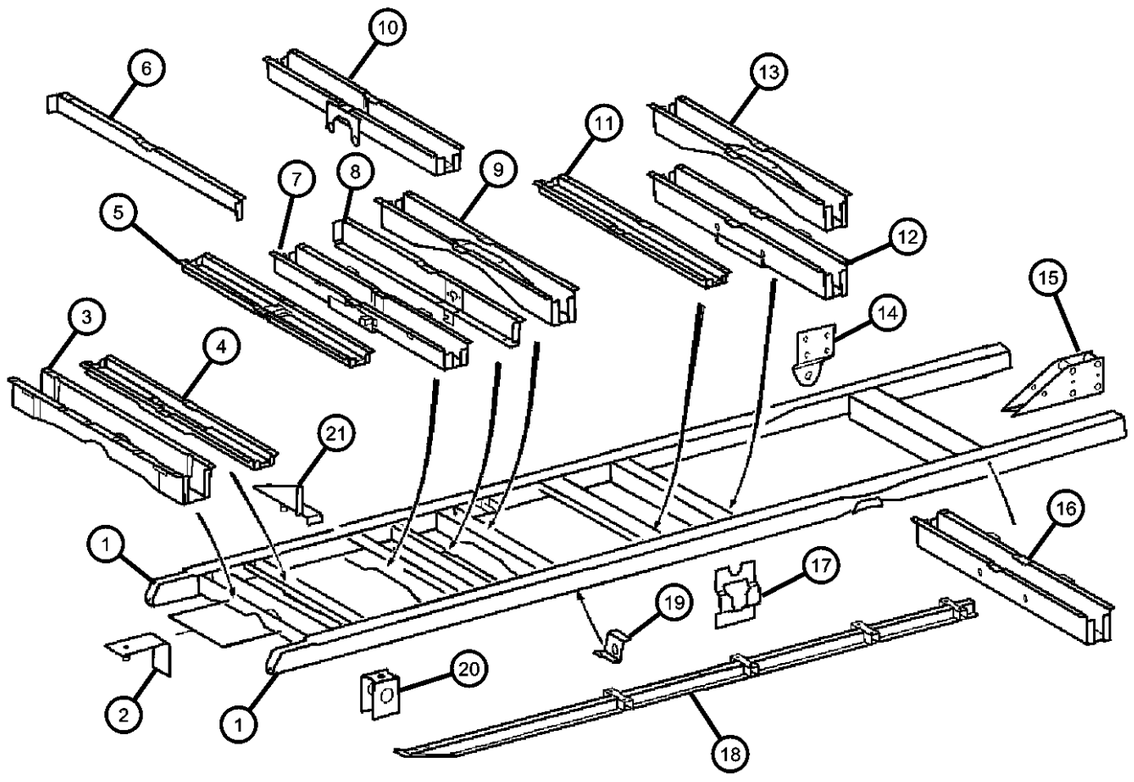

ITEM	PART NUMBER	QTY	LINE	SERIES	BODY	ENGINE	TRANS	TRIM	DESCRIPTION
		1	3, 7	L	12, 15, 16				
8									CROSSMEMBER, Front Frame
	05118136AA	1	2, 6	L	01, 02				
		1	2, 6	L	11, 12, 14, 15, 16				
		1	2, 6	L	16				
		1	2, 6	L	56				
		1	3, 7	L	02				
		1	3, 7	L	15, 16, 12				
9									CROSSMEMBER, Front Frame
	05118149AA	1	2, 6	L	11, 12, 14, 15, 16				
		1	2, 6	L	51, 54				
10									CROSSMEMBER, Front Frame
	05118160AA	1	2, 6	L	56				
		1	2, 6	L	16				
11									CROSSMEMBER, Front Frame
	05118144AA	1	2, 6	L	11, 14, 16				
		1	2, 6	L	51, 54, 56				
		1	3, 7	L	16				
12									CROSSMEMBER, Front Frame
	05118168AA	1	2, 6	L	16				
		1	2, 6	L	56				
		1	3, 7	L	16				
13									CROSSMEMBER, Front Frame
	05118170AA	1	2, 6	L	16				
		1	2, 6	L	56				
14									BRACKET, Frame
	05118791AA	4	3, 7	L	12, 15, 16				

SPRINTER (VA)

SERIES	LINE	BODY	ENGINE	TRANSMISSION
L = LOWLINE	3 = HD DODGE 2WD 6 = Lt. Duty DODGE 4WD 2 = Med. Duty DODGE 2WD 7 = Med. Duty DODGE 4WD	55 = Wagon 140" 54 = Wagon 118" 52 = Wagon 140" 51 = Wagon 118" 12 = Van 140" 11 = Van 118" 06 = Front Section 158" 14 = Van 118" 15 = Van 140" 16 = Van 158" 56 = Wagon 158" 01 = Chassis Forward Control 118" 02 = Chassis Forward Control 140"	EX8 = Engine-2.7L I5 Mercedes Turbo Diesel	DGJ = Transmission-5-Spd. Automatic,W5A580

Side Frame Rails and Crossmembers 2500
Figure 13-110

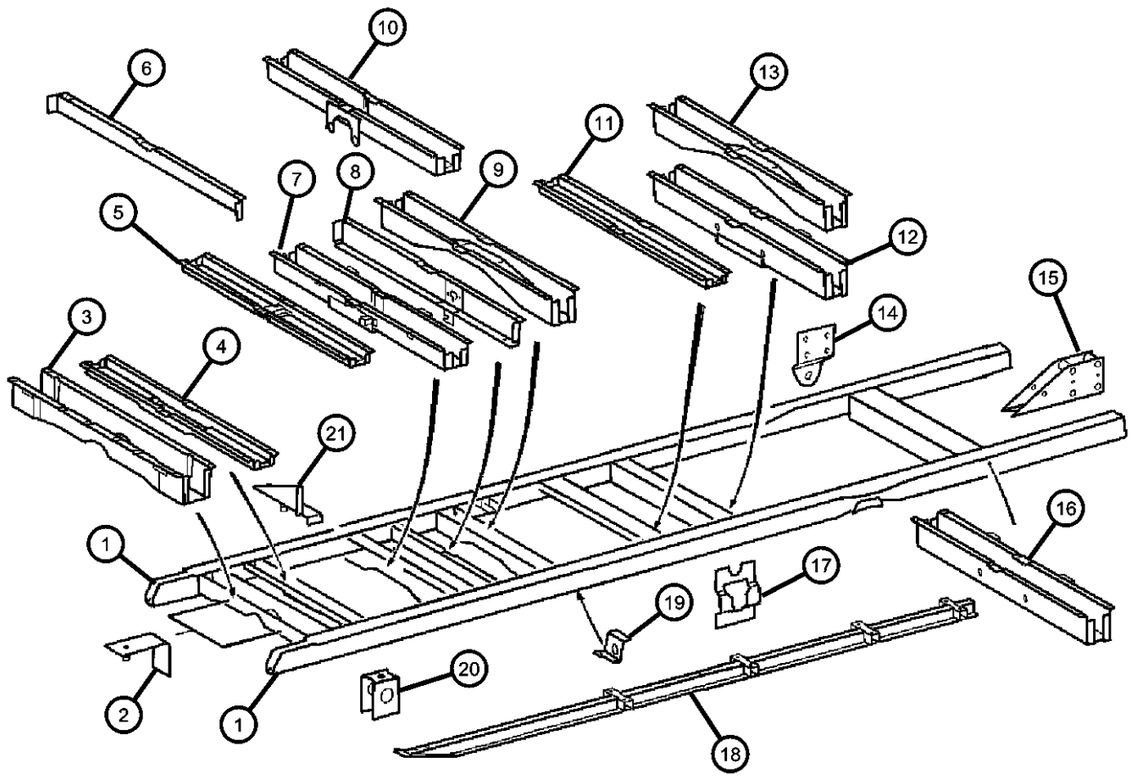

ITEM	PART NUMBER	QTY	LINE	SERIES	BODY	ENGINE	TRANS	TRIM	DESCRIPTION
		2	2, 6	L	01, 02, 06				
		2	2, 6	L	11, 12, 14, 15, 16				
		2	2, 6	L	51, 52, 54, 55, 56				
15									BRACKET, Frame
	05118212AA	2	2, 6	L	11, 12, 14, 15, 16				
		2	2, 6	L	51, 52, 54, 55, 56				
16									CROSSMEMBER, Front Frame
	05118154AA	1	2, 6	L	16				
		1	2, 6	L	56				
17	05119638AA	2	3, 7	L	12, 15, 16				BRACKET, Frame
18									BRACKET, Frame Rail
	05118220AA	1	2, 6	L	51, 52, 54, 55, 56				
		1	3, 7	L	12, 15, 16				
		1	2, 6	L	14, 15, 16, 11, 12				
19									BRACKET, Frame
	05119321AA	1	2, 6	L	01, 02, 06				
		1	2, 6	L	11, 12, 14, 15, 16				
		1	2, 6	L	51, 52, 54, 55, 56				
20									SUPPORT, Under Body Hold Down
	05118266AA	4	2, 6	L	51, 52, 54, 55, 56				
		4	6, 2	L	51, 54				
		8	2, 6	L	52, 55, 56				
		4	2, 6	L	11, 12, 14, 15, 16				

SPRINTER (VA)

SERIES	LINE	BODY	ENGINE	TRANSMISSION
L = LOWLINE	3 = HD DODGE 2WD 6 = Lt. Duty DODGE 4WD 2 = Med. Duty DODGE 2WD 7 = Med. Duty DODGE 4WD	55 = Wagon 140" 54 = Wagon 118" 52 = Wagon 140" 51 = Wagon 118" 12 = Van 140" 11 = Van 118" 06 = Front Section 158" 14 = Van 118" 15 = Van 140" 16 = Van 158" 56 = Wagon 158" 01 = Chassis Forward Control 118" 02 = Chassis Forward Control 140"	EX8 = Engine-2.7L I5 Mercedes Turbo Diesel	DGJ = Transmission-5-Spd. Automatic,W5A580

Side Frame Rails and Crossmembers 2500
Figure 13-110

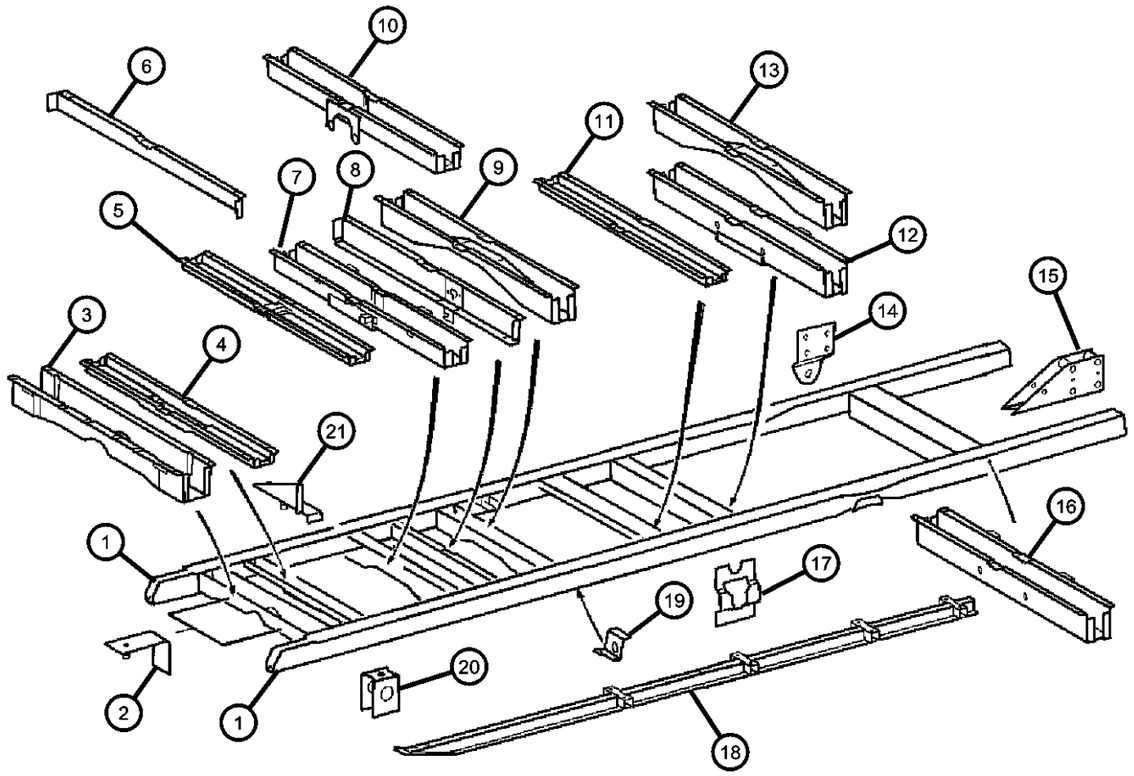

ITEM	PART NUMBER	QTY	LINE	SERIES	BODY	ENGINE	TRANS	TRIM	DESCRIPTION
21									BRACKET, Frame
	05127246AA	2	2, 6	L	11, 12, 14, 15, 16				
		2	2, 6	L	51, 52, 54, 55, 56				
		2	3, 7	L	12, 15, 16				

SPRINTER (VA)

SERIES	LINE	BODY	ENGINE	TRANSMISSION
L = LOWLINE	3 = HD DODGE 2WD 6 = Lt. Duty DODGE 4WD 2 = Med. Duty DODGE 2WD 7 = Med. Duty DODGE 4WD	55 = Wagon 140" 54 = Wagon 118" 52 = Wagon 140" 51 = Wagon 118" 12 = Van 140" 11 = Van 118" 06 = Front Section 158" 14 = Van 118" 15 = Van 140" 16 = Van 158" 56 = Wagon 158" 01 = Chassis Forward Control 118" 02 = Chassis Forward Control 140"	EX8 = Engine-2.7L I5 Mercedes Turbo Diesel	DGJ = Transmission-5-Spd. Automatic,W5A580

Side Frame Rails and Crossmembers 3500
Figure 13-120

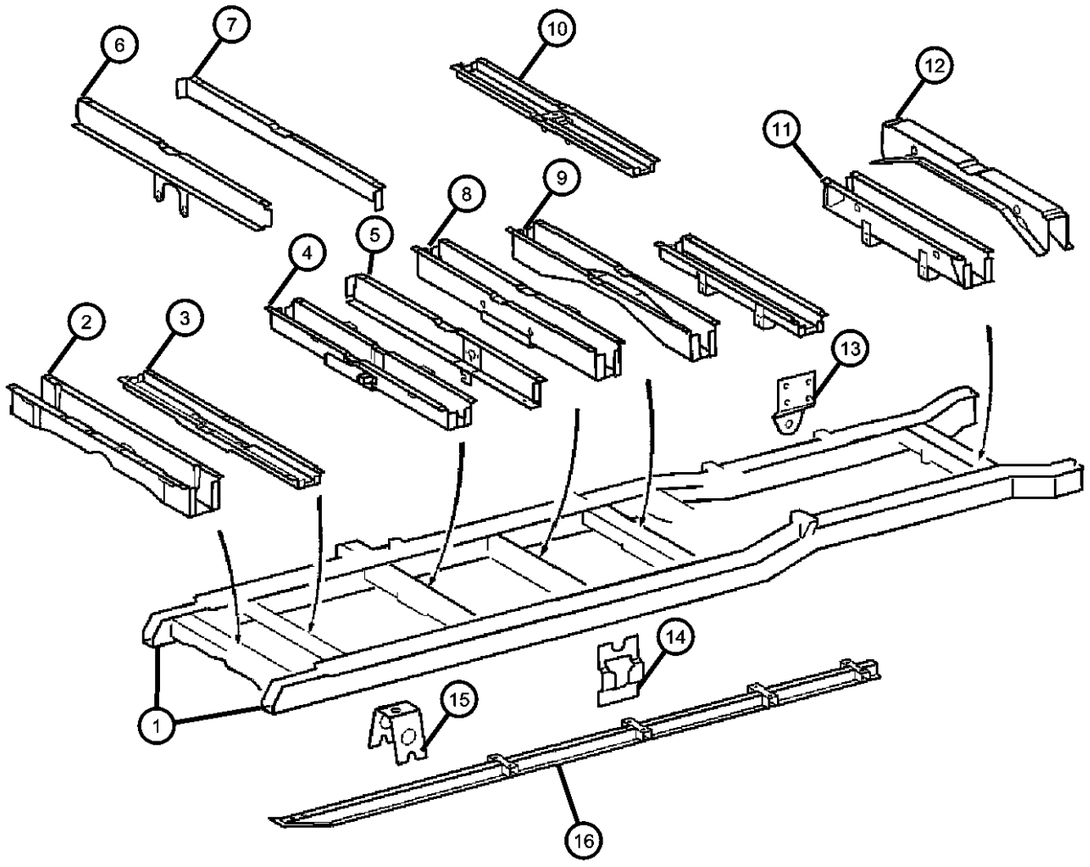

ITEM	PART NUMBER	QTY	LINE	SERIES	BODY	ENGINE	TRANS	TRIM	DESCRIPTION
1									RAIL, Frame Side, 05118063aa Lt.
	05118063AA	1	3, 7	L	06				Left
		1	3, 7	L	16				Left
	05118082AA	1	3, 7	L	06				Right
		1	3, 7	L	16				Right
2									CROSSMEMBER, Front Frame
	05118178AA	1	3, 7	L	02, 06				
		1	3, 7	L	12, 15, 16				
3									CROSSMEMBER, Front Frame
	05118152AA	1	2, 6	L	01, 06				
		1	2, 6	L	11, 14, 16				
		1	2, 6	L	51, 54, 56				
		1	3, 7	L	16				
4									CROSSMEMBER, Front Frame
	05118097AA	1	2, 6	L	11, 12, 14, 15, 16				
		1	2, 6	L	51, 52, 54, 55, 56				
		1	7, 3	L	12, 15, 16				
5									CROSSMEMBER, Front Frame
	05118136AA	1	2, 6	L	01, 02				
		1	2, 6	L	11, 12, 14, 15, 16				
		1	2, 6	L	16				
		1	2, 6	L	56				
		1	3, 7	L	16, 12, 15				
6									CROSSMEMBER, Rear Frame
	05118182AA	1	3, 7	L	02, 06				
		1	3, 7	L	12, 15, 16				
7		1							CROSSMEMBER, Front Frame, (NOT SERVICED)

SPRINTER (VA)

SERIES	LINE	BODY	ENGINE	TRANSMISSION
L = LOWLINE	3 = HD DODGE 2WD 6 = Lt. Duty DODGE 4WD 2 = Med. Duty DODGE 2WD 7 = Med. Duty DODGE 4WD	55 = Wagon 140" 54 = Wagon 118" 52 = Wagon 140" 51 = Wagon 118" 12 = Van 140" 11 = Van 118" 06 = Front Section 158" 14 = Van 118" 15 = Van 140" 16 = Van 158" 56 = Wagon 158" 01 = Chassis Forward Control 118" 02 = Chassis Forward Control 140"	EX8 = Engine-2.7L I5 Mercedes Turbo Diesel	DGJ = Transmission-5-Spd. Automatic,W5A580

Side Frame Rails and Crossmembers 3500
Figure 13-120

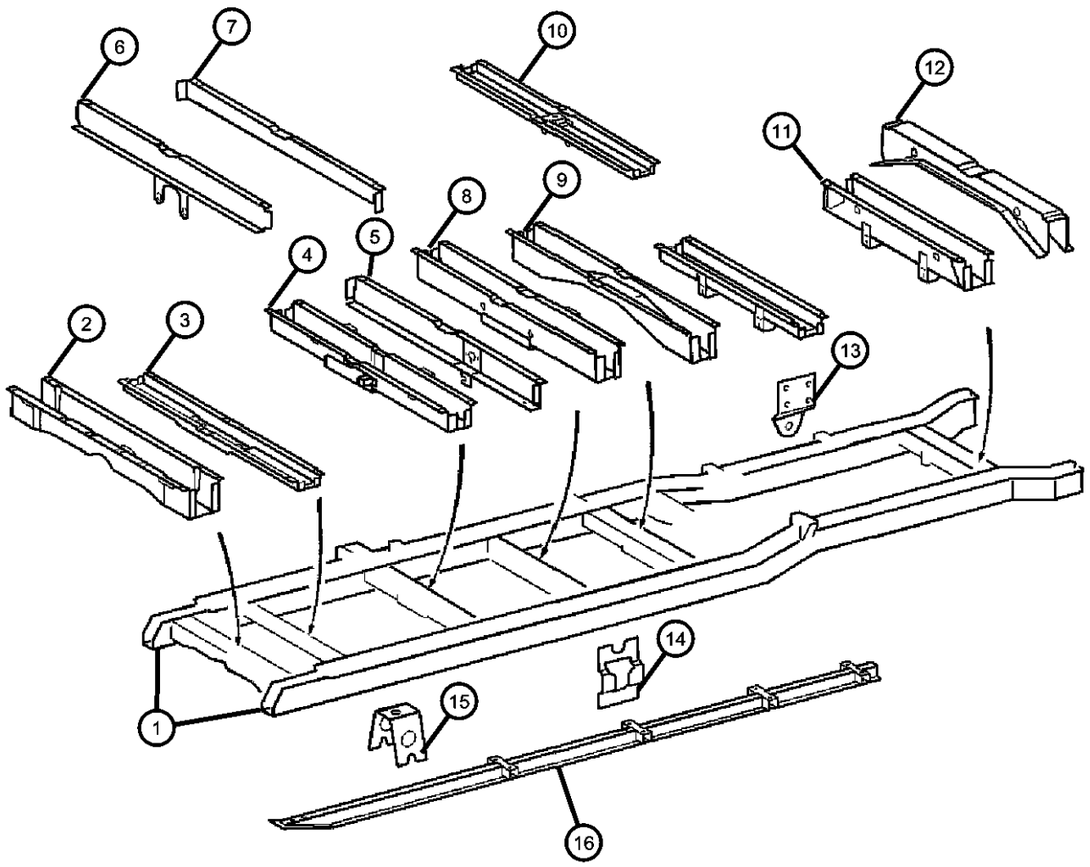

ITEM	PART NUMBER	QTY	LINE	SERIES	BODY	ENGINE	TRANS	TRIM	DESCRIPTION
8									CROSSMEMBER, Front Frame
	05118149AA	1	2, 6	L	11, 12, 14, 15, 16				
		1	2, 6	L	51, 54				
9									CROSSMEMBER, Front Frame
	05118170AA	1	2, 6	L	16				
		1	2, 6	L	56				
10									CROSSMEMBER, Front Frame
	05118142AA	1	2, 6	L	11, 12, 14, 15, 16				
		1	2, 6	L	51, 52, 54, 55, 56				
		1	3, 7	L	12, 15, 16				
11									CROSSMEMBER, Rear Frame
	05118182AA	1	3, 7	L	02, 06				
		1	3, 7	L	12, 15, 16				
12									CROSSMEMBER, Shock Mount
	05118174AA	1	3, 7	L	02, 06				
		1	3, 7	L	12, 15, 16				
13									BRACKET, Frame
	05118791AA	2	2, 6	L	01, 02, 06				
		2	2, 6	L	11, 12, 14, 15, 16				
		2	2, 6	L	51, 52, 54, 55, 56				
		4	3, 7	L	12, 15, 16				
14									BRACKET, Frame
	05119638AA	2	3, 7	L	02, 06				
		1	3, 7	L	12, 15, 16				
15									BRACKET, Crossmember
	05118223AA	6	3, 7	L	12, 15				

SPRINTER (VA)

SERIES	LINE	BODY	ENGINE	TRANSMISSION
L = LOWLINE	3 = HD DODGE 2WD 6 = Lt. Duty DODGE 4WD 2 = Med. Duty DODGE 2WD 7 = Med. Duty DODGE 4WD	55 = Wagon 140" 54 = Wagon 118" 52 = Wagon 140" 51 = Wagon 118" 12 = Van 140" 11 = Van 118" 06 = Front Section 158" 14 = Van 118" 15 = Van 140" 16 = Van 158" 56 = Wagon 158" 01 = Chassis Forward Control 118" 02 = Chassis Forward Control 140"	EX8 = Engine-2.7L I5 Mercedes Turbo Diesel	DGJ = Transmission-5-Spd. Automatic,W5A580

Side Frame Rails and Crossmembers 3500
Figure 13-120

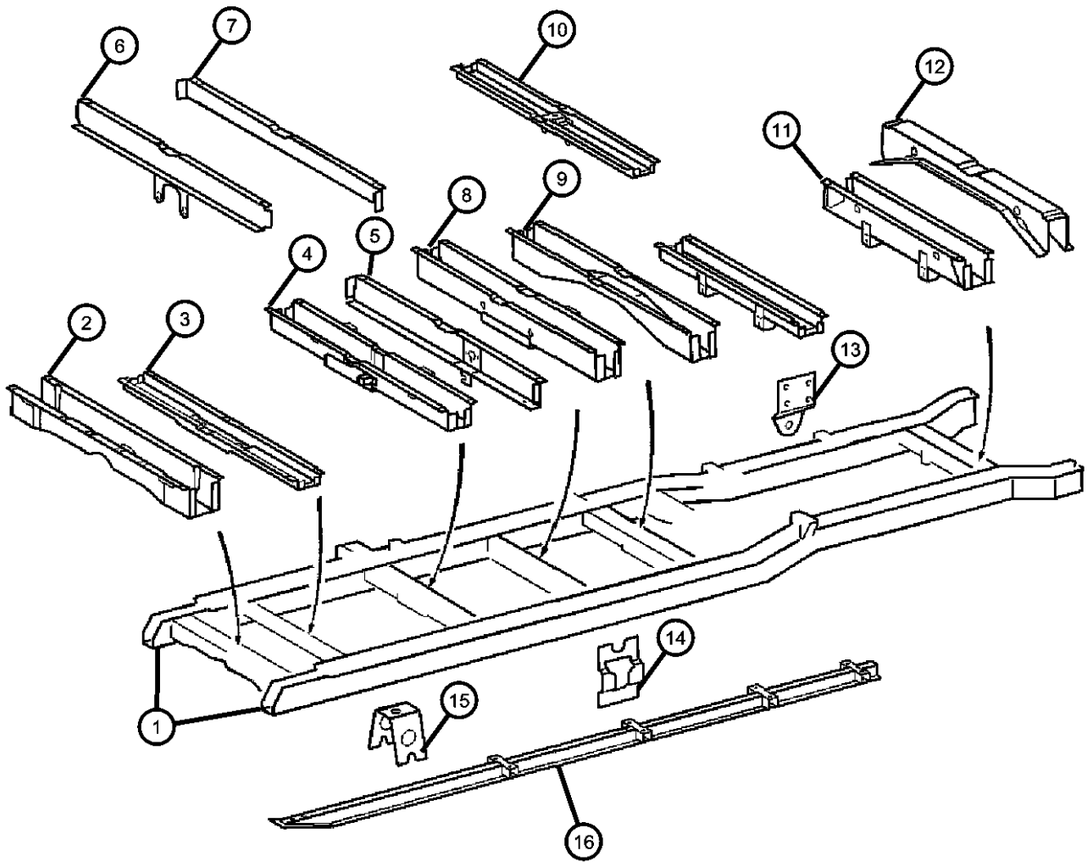

ITEM	PART NUMBER	QTY	LINE	SERIES	BODY	ENGINE	TRANS	TRIM	DESCRIPTION
		8	3, 7	L	16				
16									BRACKET, Frame Rail
	05118220AA	1	2, 6	L	11, 12, 14, 15, 16				
		1	2, 6	L	16				
		1	2, 6	L	51, 52, 54, 55, 56				
		1	3, 7	L	12, 15, 16				

SPRINTER (VA)

SERIES	LINE	BODY	ENGINE	TRANSMISSION
L = LOWLINE	3 = HD DODGE 2WD 6 = Lt. Duty DODGE 4WD 2 = Med. Duty DODGE 2WD 7 = Med. Duty DODGE 4WD	55 = Wagon 140" 54 = Wagon 118" 52 = Wagon 140" 51 = Wagon 118" 12 = Van 140" 11 = Van 118" 06 = Front Section 158" 14 = Van 118" 15 = Van 140" 16 = Van 158" 56 = Wagon 158" 01 = Chassis Forward Control 118" 02 = Chassis Forward Control 140"	EX8 = Engine-2.7L I5 Mercedes Turbo Diesel	DGJ = Transmission-5-Spd. Automatic,W5A580

AR = use ase required - = Non illustrrated part

Brackets, Frame To Body Supports
Figure 13-130

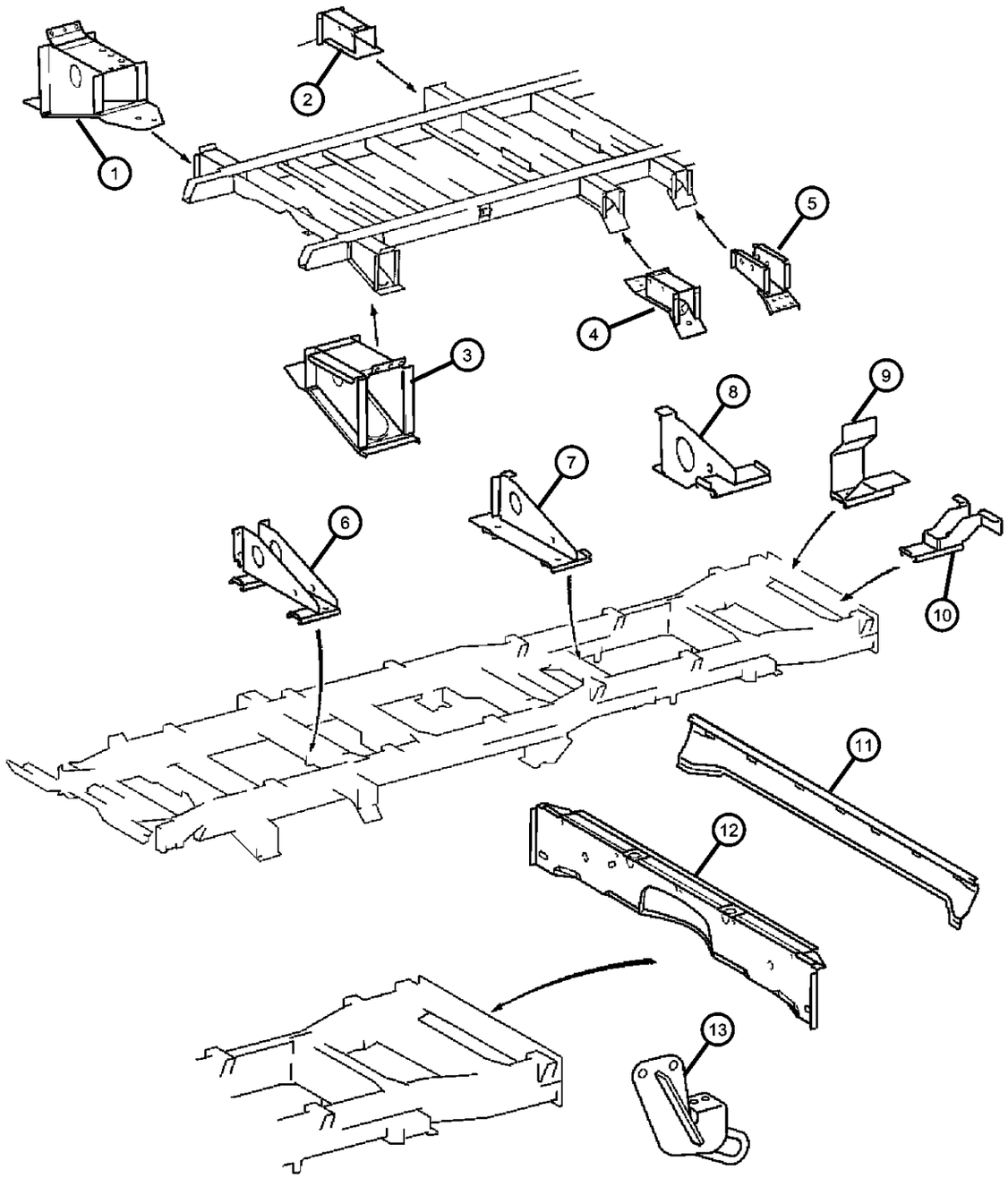

ITEM	PART NUMBER	QTY	LINE	SERIES	BODY	ENGINE	TRANS	TRIM	DESCRIPTION
1									BRACKET, Frame Rail
	05118013AA	1	2, 6	L	11, 12, 14, 15, 16				Right
		1	2, 6	L	56, 51, 52, 54, 55				Right
2	05118024AA	1	3, 7	L	12, 15, 16				BRACKET, Frame RailRight
3									BRACKET, Frame Rail
	05118031AA	1	2, 6	L	11, 12, 14, 15, 16				Left
		1	2, 6	L	51, 52, 54, 55, 56				Left
	05118035AA	1	3, 7	L	12, 15, 16				Left
4									BRACKET, Frame Rail
	05118025AA	1	2, 6	L	52, 55, 56				
		1	3, 7	L	12, 15, 16				Left
5	05118029AA	2	3, 7	L	12, 15, 16				BRACKET, Frame RailRight & Left
6									BRACKET, Frame
	05119822AA	1	2, 6	L	51, 52, 54, 55, 56				
		1	3, 7	L	02, 06				
		1	3, 7	L	12, 15, 16				
		1	2, 6	L	01, 02, 06				
		1	2, 6	L	11, 12, 14, 15, 16				
7									BRACKET, Frame
	05119804AA	1	2, 6	L	02, 06				
		1	2, 6	L	11, 12, 14, 15, 16				
		1	2, 6	L	51, 52, 54, 55, 56				
		1	3, 7	L	02, 06				
		1	3, 7	L	12, 15, 16				
8									BRACKET, Exhaust, Muffler

SPRINTER (VA)

SERIES	LINE	BODY	ENGINE	TRANSMISSION
L = LOWLINE	3 = HD DODGE 2WD 6 = Lt. Duty DODGE 4WD 2 = Med. Duty DODGE 2WD 7 = Med. Duty DODGE 4WD	55 = Wagon 140" 54 = Wagon 118" 52 = Wagon 140" 51 = Wagon 118" 12 = Van 140" 11 = Van 118" 06 = Front Section 158" 14 = Van 118" 15 = Van 140" 16 = Van 158" 56 = Wagon 158" 01 = Chassis Forward Control 118" 02 = Chassis Forward Control 140"	EX8 = Engine-2.7L I5 Mercedes Turbo Diesel	DGJ = Transmission-5-Spd. Automatic,W5A580

AR = use ase required - = Non illustrrated part

Brackets, Frame To Body Supports
Figure 13-130

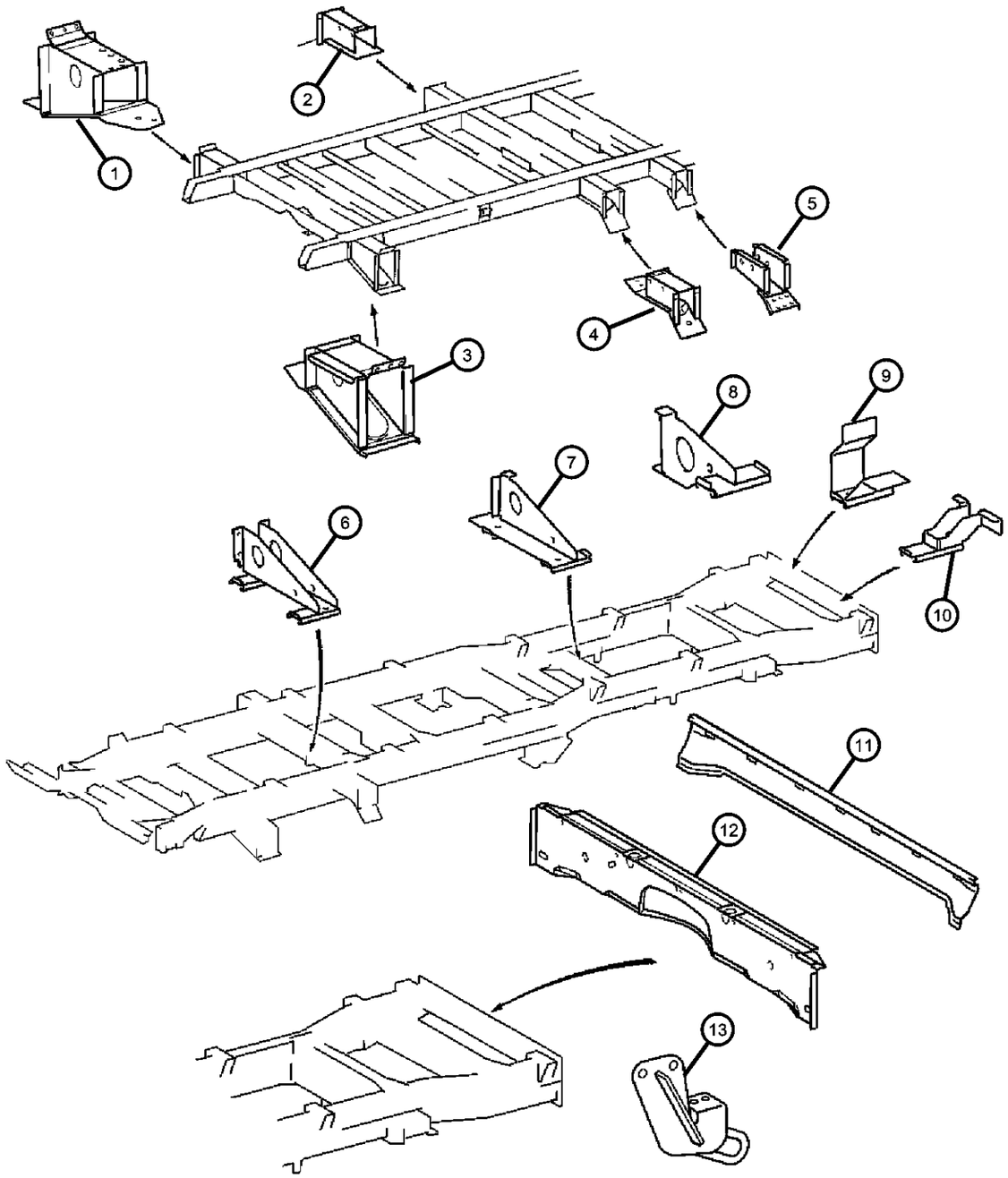

ITEM	PART NUMBER	QTY	LINE	SERIES	BODY	ENGINE	TRANS	TRIM	DESCRIPTION
	05119811AA	1	2, 6	L	06				
		1	2, 6	L	16				
		1	2, 6	L	56				
9									BRACKET, Exhaust, Muffler
	05119826AA	1	3, 7	L	02, 06				
		1	3, 7	L	16, 12, 15				
10									BRACKET, Exhaust, Muffler
	05119826AA	1	3, 7	L	02, 06				
		1	3, 7	L	12, 15, 16				
11									REINFORCEMENT, Rear Bumper
	05104159AA	1	3, 7	L	12, 15, 16				
		1	2, 6	L	11, 12, 14, 15, 16				
		1	2, 6	L	51, 52, 54, 55, 56				
12									REINFORCEMENT, Rear Bumper
	05104050AA	1	2, 6	L	11, 12, 14, 15, 16				
		1	2, 6	L	51, 52, 54, 55, 56				
		1	3, 7	L	12, 15, 16				
13									HOOK, Tow
	05118001AA	1	2, 6	L	14, 11				
		1	2, 6	L	51, 54				
	05118003AA	1	2, 6	L	12, 15, 16				
		1	2, 6	L	52, 55, 56				
	05118006AA	1	3, 7	L	12, 15				
	05118008AA	1	3, 7	L	16				

SPRINTER (VA)

SERIES	LINE	BODY	ENGINE	TRANSMISSION
L = LOWLINE	3 = HD DODGE 2WD 6 = Lt. Duty DODGE 4WD 2 = Med. Duty DODGE 2WD 7 = Med. Duty DODGE 4WD	55 = Wagon 140" 54 = Wagon 118" 52 = Wagon 140" 51 = Wagon 118" 12 = Van 140" 11 = Van 118" 06 = Front Section 158" 14 = Van 118" 15 = Van 140" 16 = Van 158" 56 = Wagon 158" 01 = Chassis Forward Control 118" 02 = Chassis Forward Control 140"	EX8 = Engine-2.7L I5 Mercedes Turbo Diesel	DGJ = Transmission-5-Spd. Automatic,W5A580

Bumper, Front
Figure 13-230

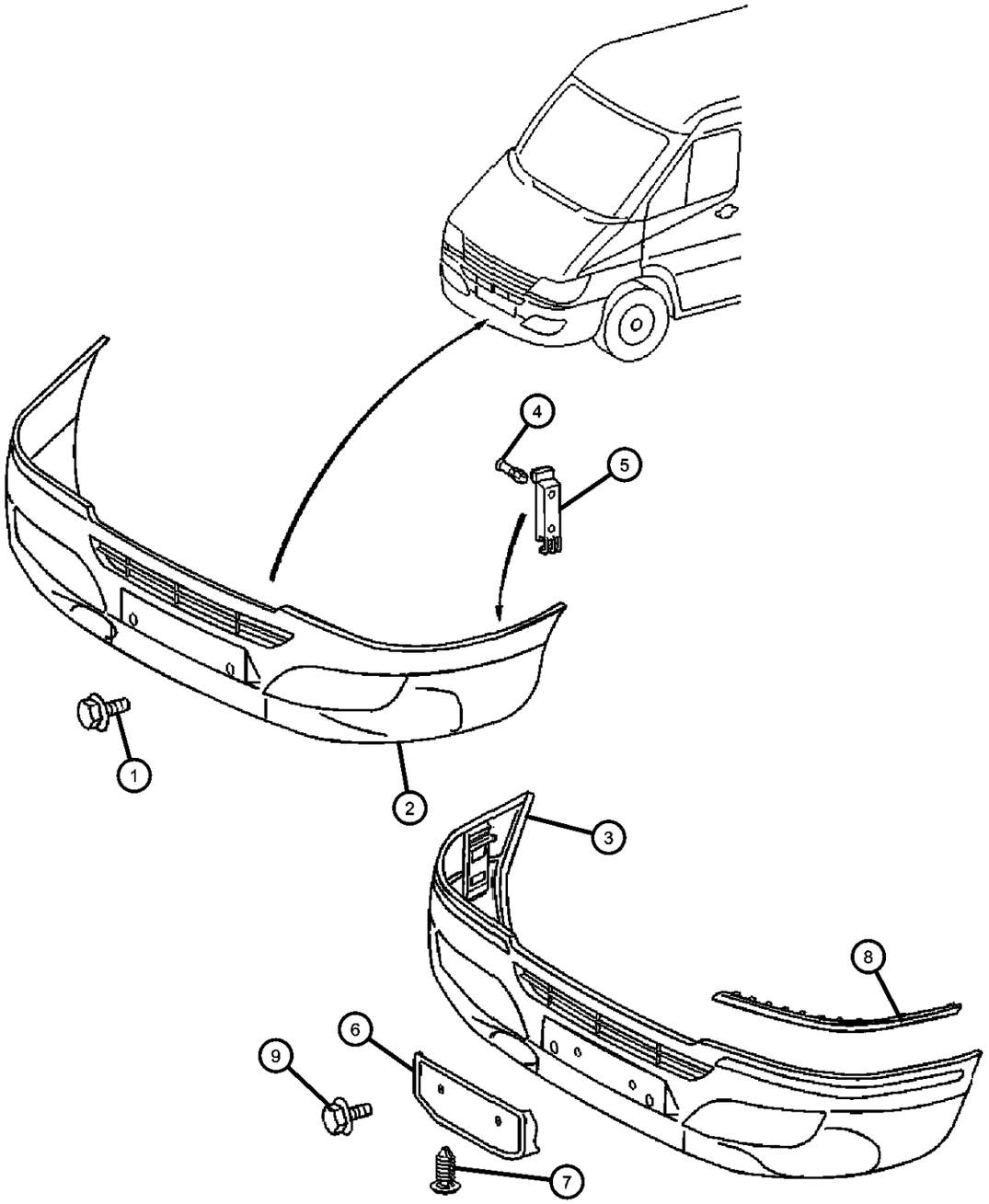

ITEM	PART NUMBER	QTY	LINE	SERIES	BODY	ENGINE	TRANS	TRIM	DESCRIPTION
1									SCREW
	05103728AA	2	2, 6	L	01, 02, 06				
		2	2, 6	L	11, 12, 14, 15, 16				
		2	2, 6	L	51, 52, 54, 55, 56				
		2	3, 7	L	12, 15, 16				
2									FASCIA, Front
	05104513AA	1	2, 6	L	54, 55, 56, 51, 52				
		1	3, 7	L	02, 06				
		1	2, 6	L	01, 02, 06				
		1	2, 6	L	11, 12, 14, 15, 16				
		1	3, 7	L	12, 15, 16				
3									FASCIA, Front
	05104517AA	1	2, 6	L	01, 02, 06				[MJD]
		1	2, 6	L	11, 12, 14, 15, 16				[MJD]
		1	2, 6	L	51, 52, 54, 55, 56				[MJD]
		1	3, 7	L	02, 06				[MJD]
		1	3, 7	L	12, 15, 16				[MJD]
	05132494AA	1	2, 6	L	01, 02, 06				[WDG][MCC]
		1	2, 6	L	11, 12, 14, 15, 16				[WDG][MCC]
		1	2, 6	L	51, 52, 54, 55, 56				[WDG][MCC]
	05132496AA	1	2, 6	L	01, 02, 06				[MJD,WDG]
		1	2, 6	L	11, 12, 14, 15, 16				[MJD,WDG]
		1	2, 6	L	51, 52, 54, 55, 56				[MJD,WDG]
4									RETAINER, Fascia

SPRINTER (VA)

SERIES	LINE	BODY	ENGINE	TRANSMISSION
L = LOWLINE	3 = HD DODGE 2WD 6 = Lt. Duty DODGE 4WD 2 = Med. Duty DODGE 2WD 7 = Med. Duty DODGE 4WD	55 = Wagon 140" 54 = Wagon 118" 52 = Wagon 140" 51 = Wagon 118" 12 = Van 140" 11 = Van 118" 06 = Front Section 158" 14 = Van 118" 15 = Van 140" 16 = Van 158" 56 = Wagon 158" 01 = Chassis Forward Control 118" 02 = Chassis Forward Control 140"	EX8 = Engine-2.7L I5 Mercedes Turbo Diesel	DGJ = Transmission-5-Spd. Automatic,W5A580

Bumper, Front
Figure 13-230

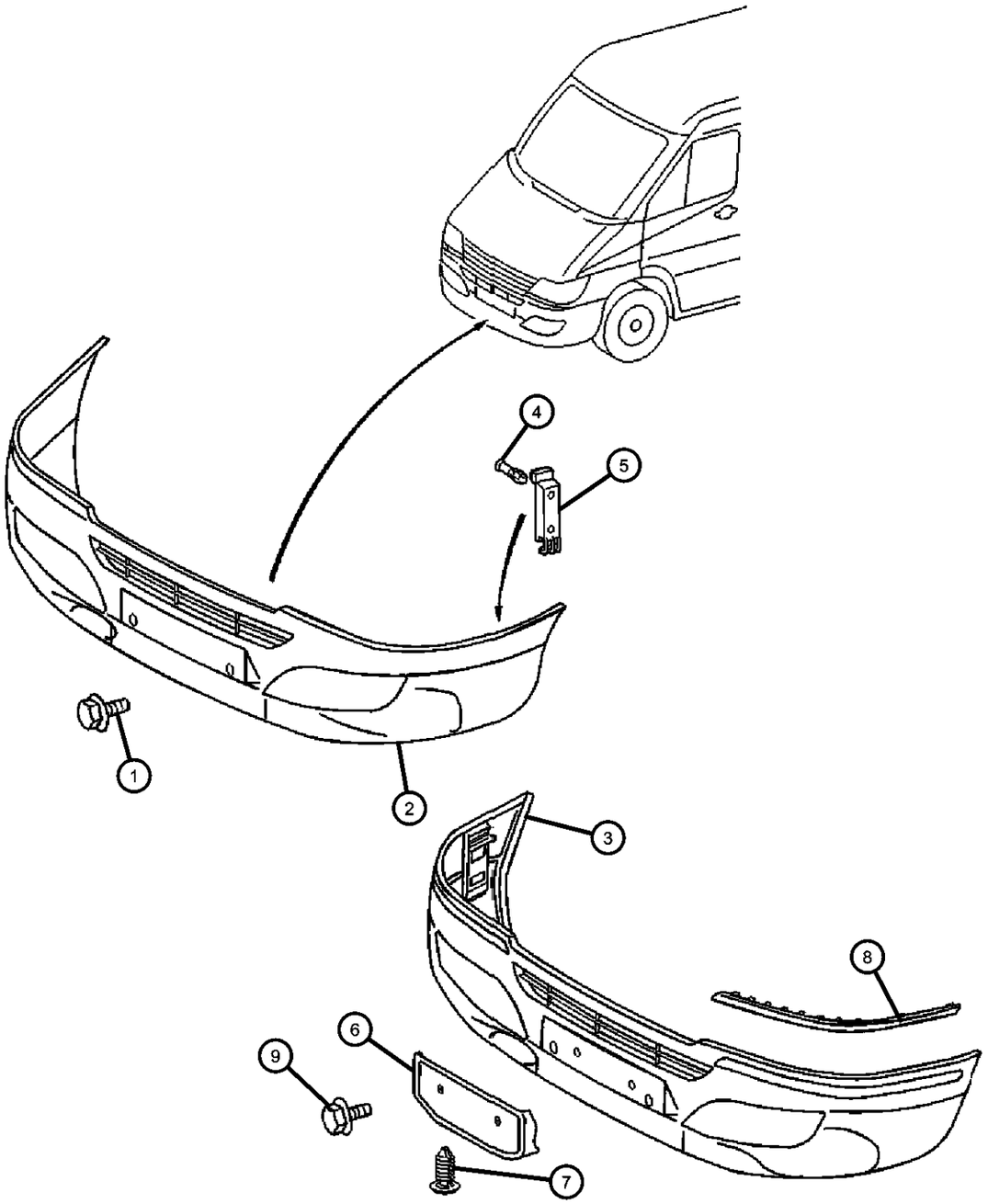

ITEM	PART NUMBER	QTY	LINE	SERIES	BODY	ENGINE	TRANS	TRIM	DESCRIPTION
	05104543AA	4	2, 6	L	01, 02, 06				
		2	2, 6	L	11, 12, 14, 15, 16				
		2	2, 6	L	51, 52, 54, 55, 56				
		4	3, 7	L	02, 06				
		2	3, 7	L	12, 15, 16				
5									BRACKET, Front Bumper
	05104505AA	2	2, 6	L	01, 02, 06				
		2	2, 6	L	11, 12, 14, 15, 16				
		2	2, 6	L	51, 52, 54, 55, 56				
		2	3, 7	L	02, 06				
		2	3, 7	L	12, 15, 16				
6									BRACKET, License Plate, Chrome
	05104524AA	1	2, 6	L	51, 52, 54, 55, 56				
		1	3, 7	L	02, 06				
		1	2, 6	L	01, 02, 06				
		1	3, 7	L	12, 15, 16				
7									PLUG
	05103817AA	2	2, 6	L	01, 02, 06				
		2	2, 6	L	11, 12, 14, 15, 16				
		7	2, 6	L	51, 52, 54, 55, 56				
		2	3, 7	L	12, 15, 16				
8									NERF, Fascia
	05104523AA	1	2, 6	L	11, 12, 14, 15, 16				Left
		1	2, 6	L	01, 02, 06				Left

SPRINTER (VA)

SERIES	LINE	BODY	ENGINE	TRANSMISSION
L = LOWLINE	3 = HD DODGE 2WD 6 = Lt. Duty DODGE 4WD 2 = Med. Duty DODGE 2WD 7 = Med. Duty DODGE 4WD	55 = Wagon 140" 54 = Wagon 118" 52 = Wagon 140" 51 = Wagon 118" 12 = Van 140" 11 = Van 118" 06 = Front Section 158" 14 = Van 118" 15 = Van 140" 16 = Van 158" 56 = Wagon 158" 01 = Chassis Forward Control 118" 02 = Chassis Forward Control 140"	EX8 = Engine-2.7L I5 Mercedes Turbo Diesel	DGJ = Transmission-5-Spd. Automatic,W5A580

Bumper, Front
Figure 13-230

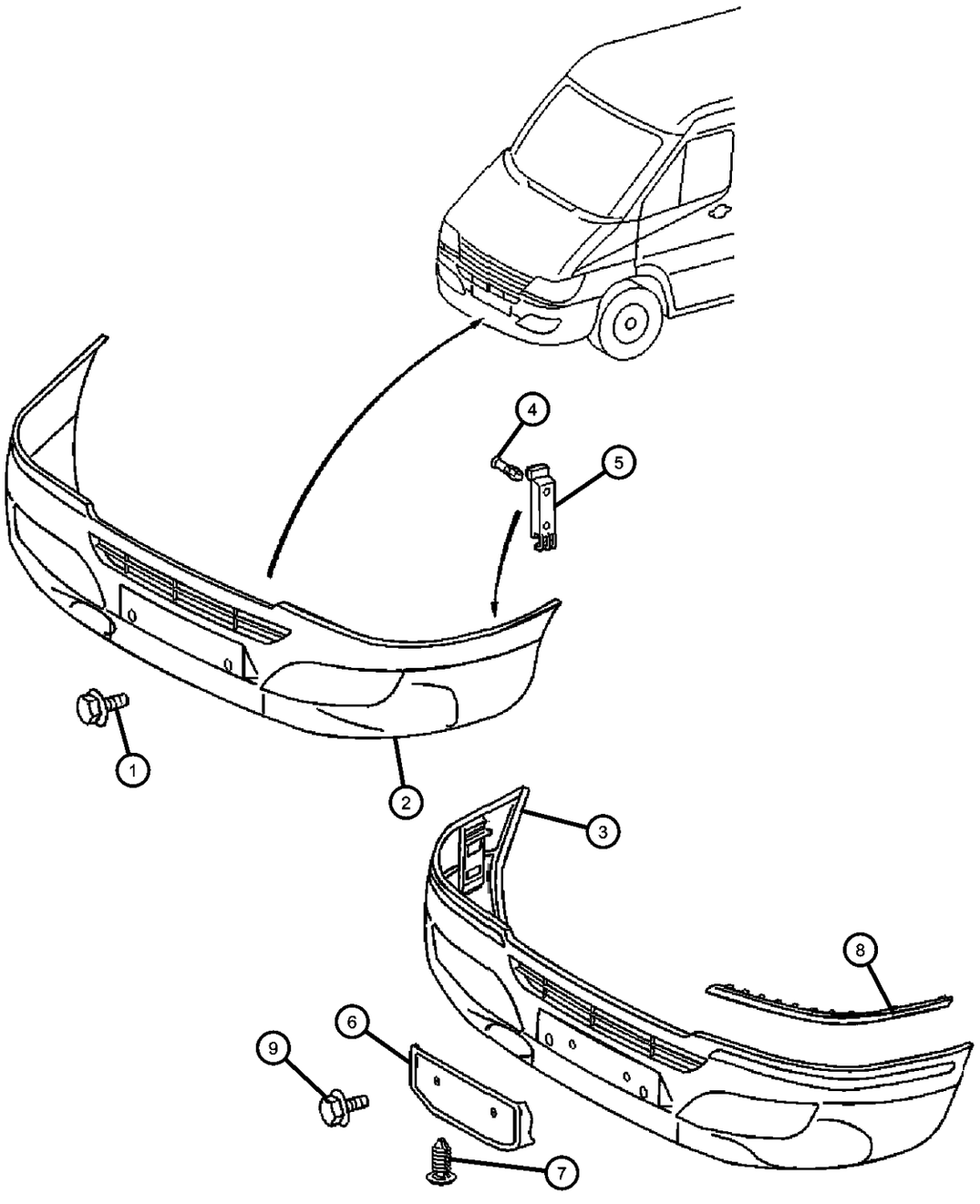

ITEM	PART NUMBER	QTY	LINE	SERIES	BODY	ENGINE	TRANS	TRIM	DESCRIPTION
		1	2, 6	L	51, 52, 54, 55, 56				Left
		1	3, 7	L	02, 06				Left
		1	3, 7	L	12, 15, 16				Left
	05104525AA	1	2, 6	L	01, 02, 06				Right
		1	2, 6	L	11, 12, 14, 15, 16				Right
		1	2, 6	L	51, 52, 54, 55, 56				Right
		1	3, 7	L	02, 06				Right
		1	3, 7	L	12, 15, 16				Right
9		1							SCREW, 5 x 16, (NOT SERVICED)

SPRINTER (VA)

SERIES	LINE	BODY	ENGINE	TRANSMISSION
L = LOWLINE	3 = HD DODGE 2WD 6 = Lt. Duty DODGE 4WD 2 = Med. Duty DODGE 2WD 7 = Med. Duty DODGE 4WD	55 = Wagon 140" 54 = Wagon 118" 52 = Wagon 140" 51 = Wagon 118" 12 = Van 140" 11 = Van 118" 06 = Front Section 158" 14 = Van 118" 15 = Van 140" 16 = Van 158" 56 = Wagon 158" 01 = Chassis Forward Control 118" 02 = Chassis Forward Control 140"	EX8 = Engine-2.7L I5 Mercedes Turbo Diesel	DGJ = Transmission-5-Spd. Automatic,W5A580

Bumper, Rear
Figure 13-320

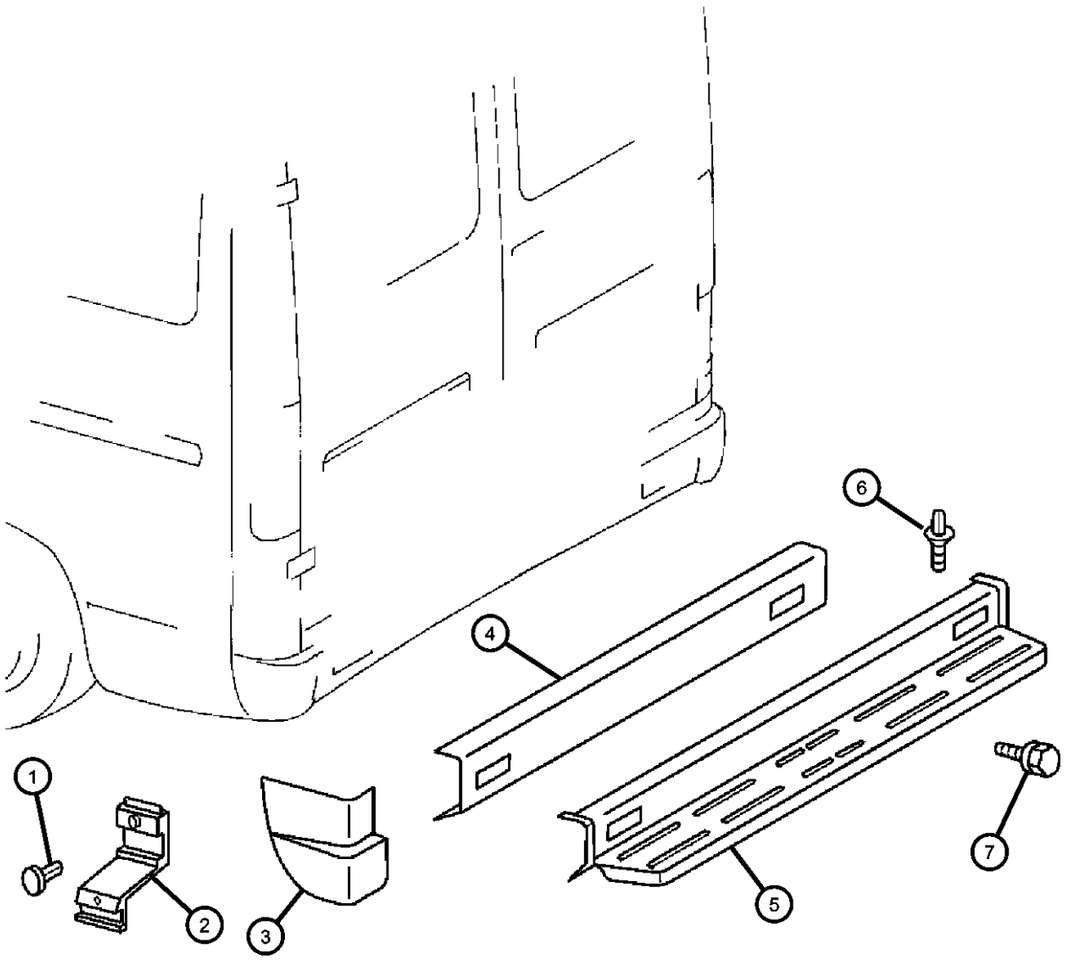

ITEM	PART NUMBER	QTY	LINE	SERIES	BODY	ENGINE	TRANS	TRIM	DESCRIPTION
1									RETAINER, Fascia
	05104543AA	4	2, 6	L	01, 02, 06				
		2	2, 6	L	11, 12, 14, 15, 16				
		2	2, 6	L	51, 52, 54, 55, 56				
		4	3, 7	L	02, 06				
		2	3, 7	L	12, 15, 16				
2									BRACKET, Rear Bumper
	05104508AA	1	2, 6	L	11, 12, 14, 15, 16				Left
		1	2, 6	L	51, 52, 54, 55, 56				Left
		1	3, 7	L	12, 15, 16				Left
	05104510AA	1	2, 6	L	11, 12, 14, 15, 16				Right
		1	2, 6	L	51, 52, 54, 55, 56				Right
		1	3, 7	L	12, 15, 16				Right
3									COVER, Fascia
	05104509AA	1	2, 6	L	11, 12, 14, 15, 16				Left
		1	2, 6	L	51, 52, 54, 55, 56				Left
		1	3, 7	L	12, 15, 16				Left
	05104511AA	1	2, 6	L	11, 12, 14, 15, 16				Right
		1	2, 6	L	51, 52, 54, 55, 56				Right
		1	3, 7	L	12, 15, 16				Right
4									BUMPER, Fascia, Rear
	05104512AA	1	2, 6	L	11, 12, 14, 15, 16				
		1	2, 6	L	51, 52, 54, 55, 56				

SPRINTER (VA)

SERIES	LINE	BODY	ENGINE	TRANSMISSION
L = LOWLINE	3 = HD DODGE 2WD 6 = Lt. Duty DODGE 4WD 2 = Med. Duty DODGE 2WD 7 = Med. Duty DODGE 4WD	55 = Wagon 140" 54 = Wagon 118" 52 = Wagon 140" 51 = Wagon 118" 12 = Van 140" 11 = Van 118" 06 = Front Section 158" 14 = Van 118" 15 = Van 140" 16 = Van 158" 56 = Wagon 158" 01 = Chassis Forward Control 118" 02 = Chassis Forward Control 140"	EX8 = Engine-2.7L I5 Mercedes Turbo Diesel	DGJ = Transmission-5-Spd. Automatic,W5A580

Bumper, Rear
Figure 13-320

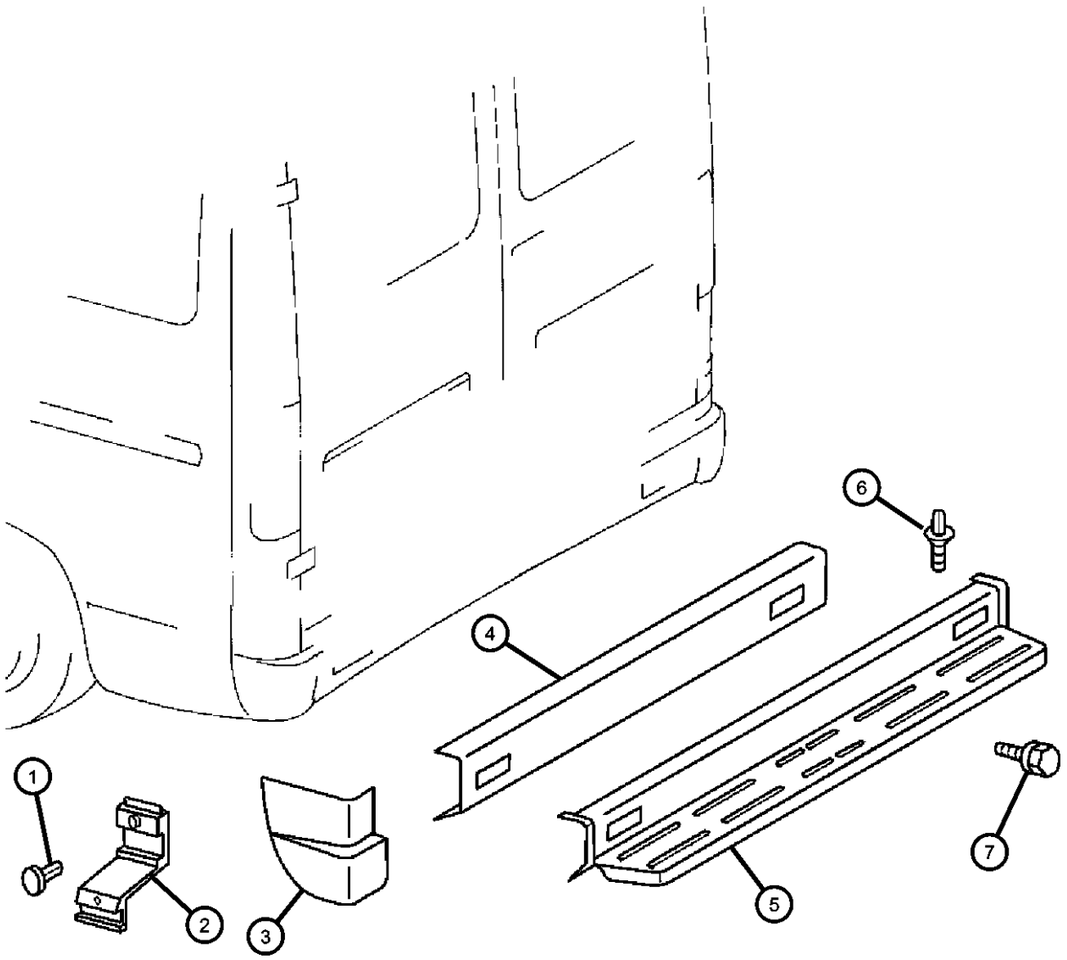

ITEM	PART NUMBER	QTY	LINE	SERIES	BODY	ENGINE	TRANS	TRIM	DESCRIPTION
		1	3, 7	L	12, 15, 16				
5									BUMPER, Fascia, Rear
	05104526AA	1	6, 2	L	11, 12, 14, 15, 16				[MBZ]
		1	2, 6	L	51, 52, 54, 55, 56				[MBZ]
		1	3, 7	L	12, 15, 16				[MBZ]
6									RIVET
	05103730AA	4	2, 6	L	11, 12, 14, 15, 16				
		4	2, 6	L	51, 52, 54, 55, 56				
		4	3, 7	L	12, 15, 16				
7									SCREW
	05103728AA	2	2, 6	L	01, 02, 06				
		2	3, 7	L	12, 15, 16				
		2	2, 6	L	11, 12, 14, 15, 16				
		2	2, 6	L	51, 52, 54, 55, 56				
-8									BUMPER, Step
	05104132AA	1	2, 6	L	12, 15, 16				
		1	2, 6	L	52, 55, 56				[MBZ,5AE,5AF]
	05104133AA	1	2, 6	L	11, 14				
		1	2, 6	L	51, 54				[MBZ,5AC]
	05104135AA	1	2, 6	L	11, 12, 14, 15, 16				
		1	2, 6	L	51, 52, 54, 55, 56				[MKB]
	05120038AA	1	3, 7	L	12, 15				[MBZ,5AE]
	05120040AA	1	3, 7	L	16				[MBZ,5AF]
-9	05120057AA	1	3, 7	L	02, 06				GUARD, Bumper

SPRINTER (VA)

SERIES	LINE	BODY	ENGINE	TRANSMISSION
L = LOWLINE	3 = HD DODGE 2WD 6 = Lt. Duty DODGE 4WD 2 = Med. Duty DODGE 2WD 7 = Med. Duty DODGE 4WD	55 = Wagon 140" 54 = Wagon 118" 52 = Wagon 140" 51 = Wagon 118" 12 = Van 140" 11 = Van 118" 06 = Front Section 158" 14 = Van 118" 15 = Van 140" 16 = Van 158" 56 = Wagon 158" 01 = Chassis Forward Control 118" 02 = Chassis Forward Control 140"	EX8 = Engine-2.7L I5 Mercedes Turbo Diesel	DGJ = Transmission-5-Spd. Automatic,W5A580

Rear Hitch
Figure 13-610

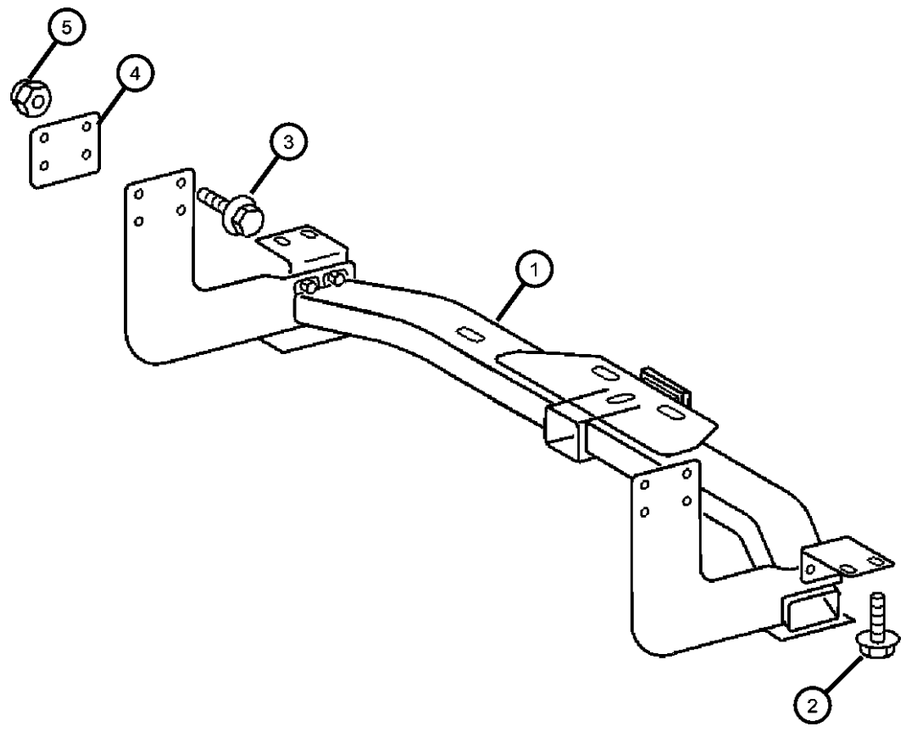

ITEM	PART NUMBER	QTY	LINE	SERIES	BODY	ENGINE	TRANS	TRIM	DESCRIPTION
1									SUPPORT, Hitch
	05128441AA	1	2, 6	L	11, 14				
		1	2, 6	L	51, 54				
	05104057AA	1	2, 6	L	12, 15, 16				
		1	2, 6	L	52, 55, 56				
		1	3, 7	L	16				
	05118519AA	1	3, 7	L	12, 15				
2	06104215AA	8	2, 3, 6, 7						BOLT, Hex Flange Head, M10x1.50x25
3									SCREW
	05104664AA	2	2, 6	L	11, 12, 14, 15, 16				
		2	3, 7	L	12, 15, 16				
4									PLATE, Towing Mounting
	05104056AA	2	2, 6	L	01, 02, 06				
		2	2, 6	L	11, 12, 14, 15, 16				
		2	2, 6	L	51, 52, 54, 55, 56				
		2	3, 7	L	02, 06				
		2	3, 7	L	12, 15, 16				
5									NUT
	05103668AA	1	2, 6	L	11, 12, 14, 15, 16				
		1	2, 6	L	51, 52, 54, 55, 56				
		1	3, 7	L	12, 15, 16				
	06104718AA	8	3, 7	L	02, 06				
		8	2, 6	L	01, 02, 06				
		2	2, 6	L	11, 12, 14, 15, 16				

SPRINTER (VA)

SERIES	LINE	BODY	ENGINE	TRANSMISSION
L = LOWLINE	3 = HD DODGE 2WD 6 = Lt. Duty DODGE 4WD 2 = Med. Duty DODGE 2WD 7 = Med. Duty DODGE 4WD	55 = Wagon 140" 54 = Wagon 118" 52 = Wagon 140" 51 = Wagon 118" 12 = Van 140" 11 = Van 118" 06 = Front Section 158" 14 = Van 118" 15 = Van 140" 16 = Van 158" 56 = Wagon 158" 01 = Chassis Forward Control 118" 02 = Chassis Forward Control 140"	EX8 = Engine-2.7L I5 Mercedes Turbo Diesel	DGJ = Transmission-5-Spd. Automatic,W5A580

Rear Hitch
Figure 13-610

ITEM	PART NUMBER	QTY	LINE	SERIES	BODY	ENGINE	TRANS	TRIM	DESCRIPTION
		8	2, 6	L	51, 52, 54, 55, 56				
		8	6, 2	L	56				

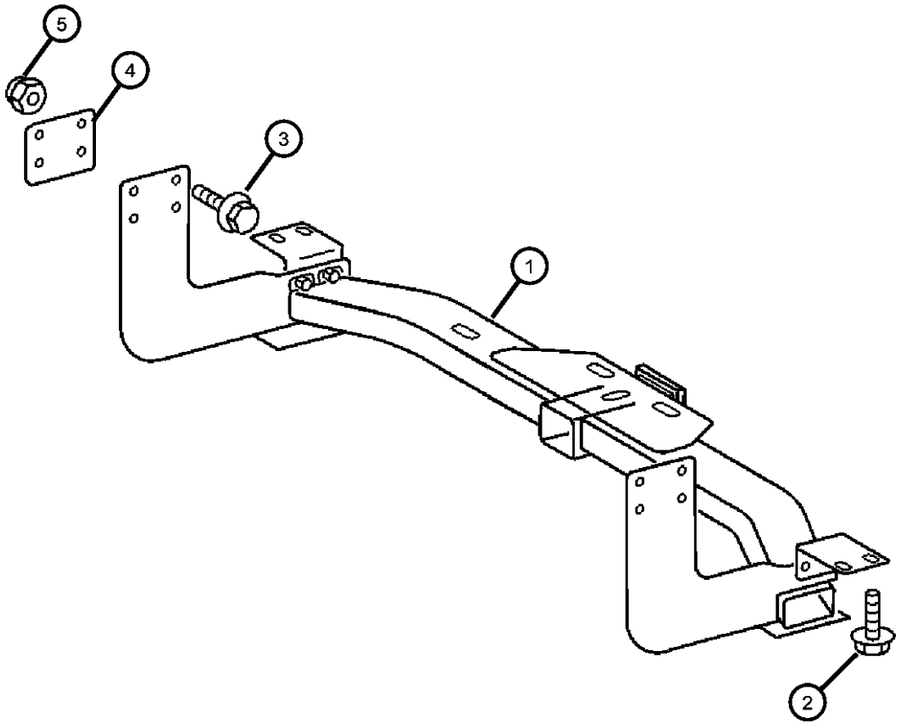

SPRINTER (VA)

SERIES	LINE	BODY	ENGINE	TRANSMISSION
L = LOWLINE	3 = HD DODGE 2WD 6 = Lt. Duty DODGE 4WD 2 = Med. Duty DODGE 2WD 7 = Med. Duty DODGE 4WD	55 = Wagon 140" 54 = Wagon 118" 52 = Wagon 140" 51 = Wagon 118" 12 = Van 140" 11 = Van 118" 06 = Front Section 158" 14 = Van 118" 15 = Van 140" 16 = Van 158" 56 = Wagon 158" 01 = Chassis Forward Control 118" 02 = Chassis Forward Control 140"	EX8 = Engine-2.7L I5 Mercedes Turbo Diesel	DGJ = Transmission-5-Spd. Automatic,W5A580

AR = use ase required - = Non illustrrated part

Trailer Tow
Figure 13-620

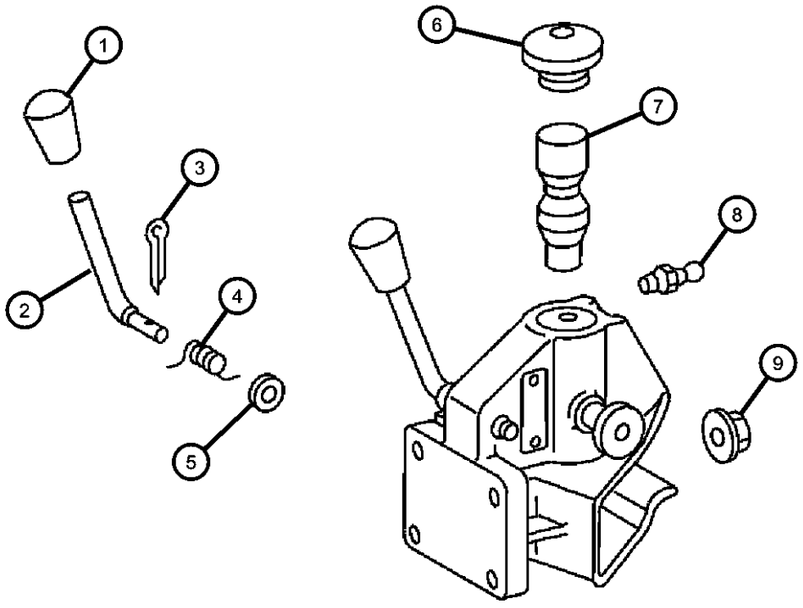

ITEM	PART NUMBER	QTY	LINE	SERIES	BODY	ENGINE	TRANS	TRIM	DESCRIPTION
1		8							HANDLE, Latch, (NOT SERVICED)
2									LEVER
	05133855AA	1	2, 6	L	01, 02, 06				
		1	2, 6	L	11, 12, 14, 15, 16				
		1	2, 6	L	51, 52, 54, 55, 56				
		1	3, 7	L	02, 06				
		1	3, 7	L	12, 15, 16				
3									PIN
	05133860AA	1	2, 6	L	51, 52, 54, 55, 56				
		1	3, 7	L	02, 06				
		1	3, 7	L	12, 15, 16				
		1	2, 6	L	01, 02, 06				
		1	2, 6	L	11, 12, 14, 15, 16				
4		1							SPRING, Lever, (NOT SERVICED)
5		1							WASHER, (NOT SERVICED)
6		1							COVER, (NOT SERVICED)
7									PIN, Hitch
	05133853AA	1	2, 6	L	01, 02, 06				
		1	2, 6	L	16, 11, 12, 14, 15				
		1	2, 6	L	51, 52, 54, 55, 56				
		1	3, 7	L	02, 06				
		1	3, 7	L	12, 15, 16				
8									FITTING, Grease
	05133858AA	1	2, 6	L	01, 02, 06				
		1	2, 6	L	16, 11, 12, 14, 15				

SPRINTER (VA)

SERIES	LINE	BODY	ENGINE	TRANSMISSION
L = LOWLINE	3 = HD DODGE 2WD 6 = Lt. Duty DODGE 4WD 2 = Med. Duty DODGE 2WD 7 = Med. Duty DODGE 4WD	55 = Wagon 140" 54 = Wagon 118" 52 = Wagon 140" 51 = Wagon 118" 12 = Van 140" 11 = Van 118" 06 = Front Section 158" 14 = Van 118" 15 = Van 140" 16 = Van 158" 56 = Wagon 158" 01 = Chassis Forward Control 118" 02 = Chassis Forward Control 140"	EX8 = Engine-2.7L I5 Mercedes Turbo Diesel	DGJ = Transmission-5-Spd. Automatic,W5A580

Trailer Tow
Figure 13-620

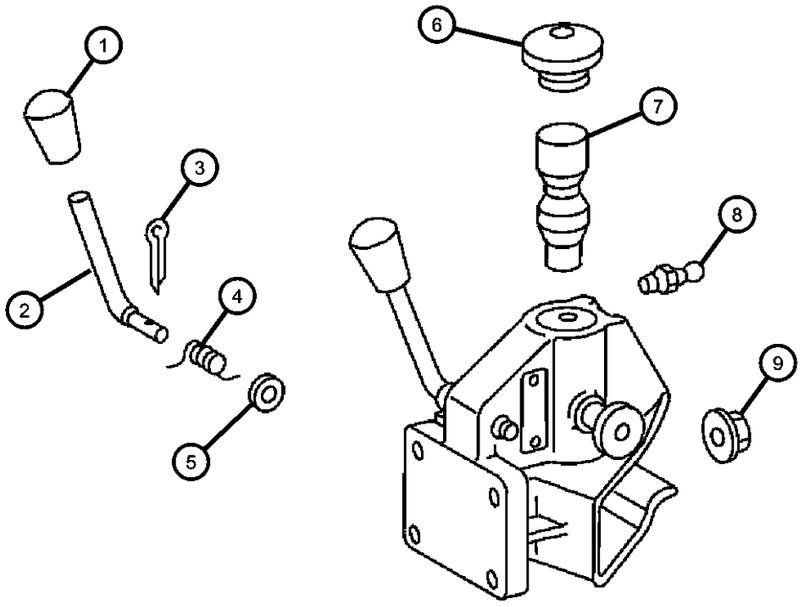

ITEM	PART NUMBER	QTY	LINE	SERIES	BODY	ENGINE	TRANS	TRIM	DESCRIPTION
		1	2, 6	L	51, 52, 54, 55, 56				
		1	3, 7	L	02, 06				
		1	3, 7	L	12, 15, 16				
9									NUT
	06104717AA	2	2, 6	L	01, 02, 06				
		4	3, 7	L	02, 06				
		4	2, 6	L	11, 12, 14, 15, 16				
		4	2, 6	L	51, 52, 54, 55, 56				
		4	3, 7	L	12, 15, 16				
		2	3, 7	L	12, 15, 16				

SPRINTER (VA)

SERIES	LINE	BODY	ENGINE	TRANSMISSION
L = LOWLINE	3 = HD DODGE 2WD 6 = Lt. Duty DODGE 4WD 2 = Med. Duty DODGE 2WD 7 = Med. Duty DODGE 4WD	55 = Wagon 140" 54 = Wagon 118" 52 = Wagon 140" 51 = Wagon 118" 12 = Van 140" 11 = Van 118" 06 = Front Section 158" 14 = Van 118" 15 = Van 140" 16 = Van 158" 56 = Wagon 158" 01 = Chassis Forward Control 118" 02 = Chassis Forward Control 140"	EX8 = Engine-2.7L I5 Mercedes Turbo Diesel	DGJ = Transmission-5-Spd. Automatic,W5A580

Group - 14

Fuel

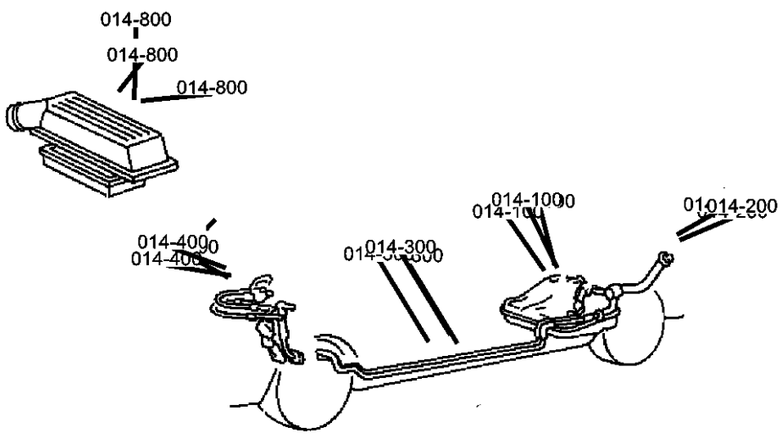

Group - 14 Fuel

Illustration Title — Group-Fig. No.

Tank, Fuel
Fuel Tank ..... Fig. 14 - 110

Fuel Tank Filler Tube
Fuel Tank Filler Tube ..... Fig. 14 - 210

Fuel Lines
Fuel Lines ..... Fig. 14 - 310
Fuel Line and Filter ..... Fig. 14 - 320

Fuel Rail
Injection System [EX8] ..... Fig. 14 - 410

Fuel Pump and Sending Unit
Fuel Module ..... Fig. 14 - 510

Fuel Injection Pump & Turbo Charger
Fuel Injection Pump [EX8] ..... Fig. 14 - 610
Turbo Charger ..... Fig. 14 - 630
Turbo Charger Heat Shield ..... Fig. 14 - 635

Air Cleaner
Air Cleaner ..... Fig. 14 - 810

Accelerator Pedal
Accelerator Pedal ..... Fig. 14 - 1110

014-100 Tank, Fuel 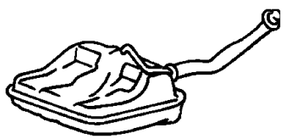	**014-1100** Accelerator Pedal 	**014-200** Fuel Tank Filler Tube 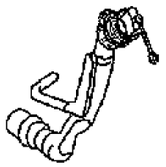	**014-300** Fuel Lines 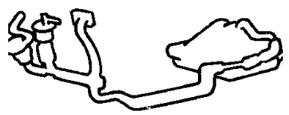
014-400 Fuel Rail 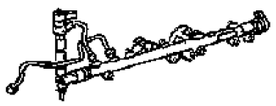	**014-500** Fuel Pump and Sending Unit 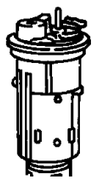	**014-600** Fuel Injection Pump & Turbo Charger 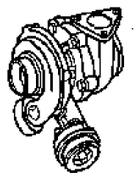	**014-800** Air Cleaner 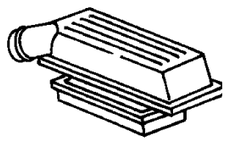

Fuel Tank
Figure 14-110

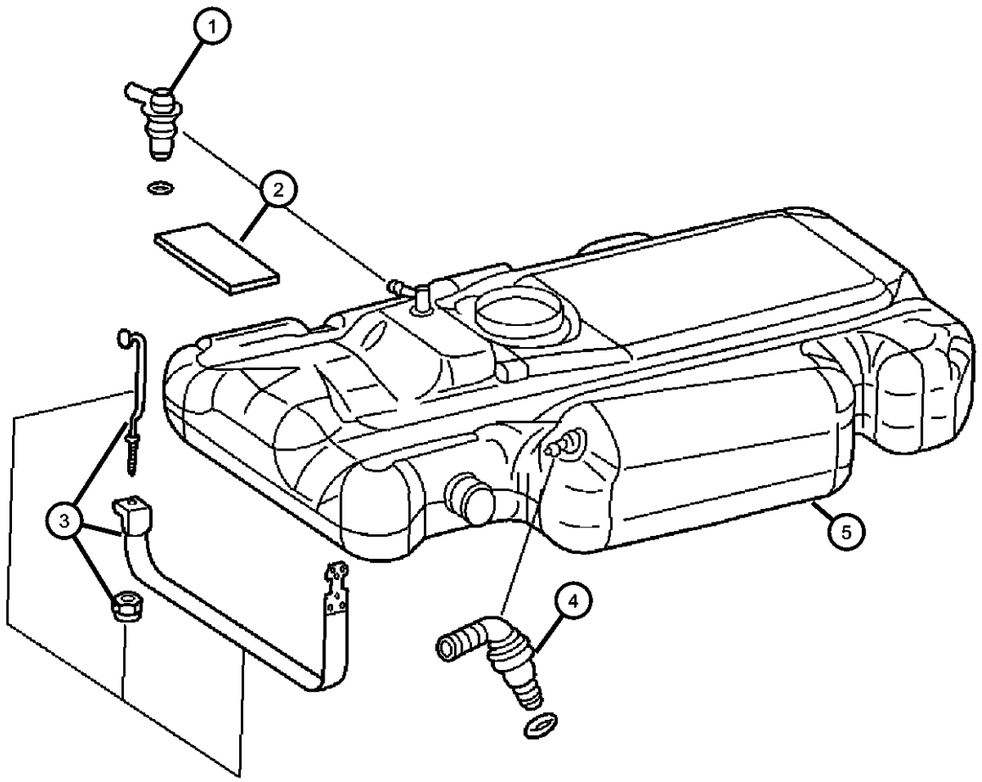

ITEM	PART NUMBER	QTY	LINE	SERIES	BODY	ENGINE	TRANS	TRIM	DESCRIPTION
Sales Codes:EX8=ENGINE-2.7L I5 MERCEDES TURBO DGJ=TRANSMISSION - 5-SPD AUTO									
1									VALVE, Vent
	05133917AA	1	3, 7	L	02, 06				
		1	3, 7	L	12, 15, 16				
2									PAD
	05133443AA	5	2, 6	L	51, 52, 54, 55, 56				
		5	2, 6	L	01, 02, 06				
		5	2, 6	L	11, 12, 14, 15, 16				
		5	3, 7	L	12, 15, 16				
3									STRAP, Fuel Tank
	05104102AA	2	2, 6	L	01, 02, 06				
		2	2, 6	L	11, 12, 14, 15, 16				
		2	2, 6	L	51, 52, 54, 55, 56				
		2	3, 7	L	12, 15, 16				
4									VALVE, Vent
	05133918AA	1	3, 7	L	02, 06				
		1	3, 7	L	12, 15, 16				
5									TANK, Fuel
	05119634AB	1	2, 6	L	01, 02, 06				
		1	2, 6	L	11, 12, 14, 15, 16				
		1	2, 6	L	51, 52, 54, 55, 56				
		1	3, 7	L	12, 15, 16				

SPRINTER (VA)

SERIES	LINE	BODY	ENGINE	TRANSMISSION
L = LOWLINE	3 = HD DODGE 2WD 6 = Lt. Duty DODGE 4WD 2 = Med. Duty DODGE 2WD 7 = Med. Duty DODGE 4WD	55 = Wagon 140" 54 = Wagon 118" 52 = Wagon 140" 51 = Wagon 118" 12 = Van 140" 11 = Van 118" 06 = Front Section 158" 14 = Van 118" 15 = Van 140" 16 = Van 158" 56 = Wagon 158" 01 = Chassis Forward Control 118" 02 = Chassis Forward Control 140"	EX8 = Engine-2.7L I5 Mercedes Turbo Diesel	DGJ = Transmission-5-Spd. Automatic,W5A580

Fuel Tank Filler Tube
Figure 14-210

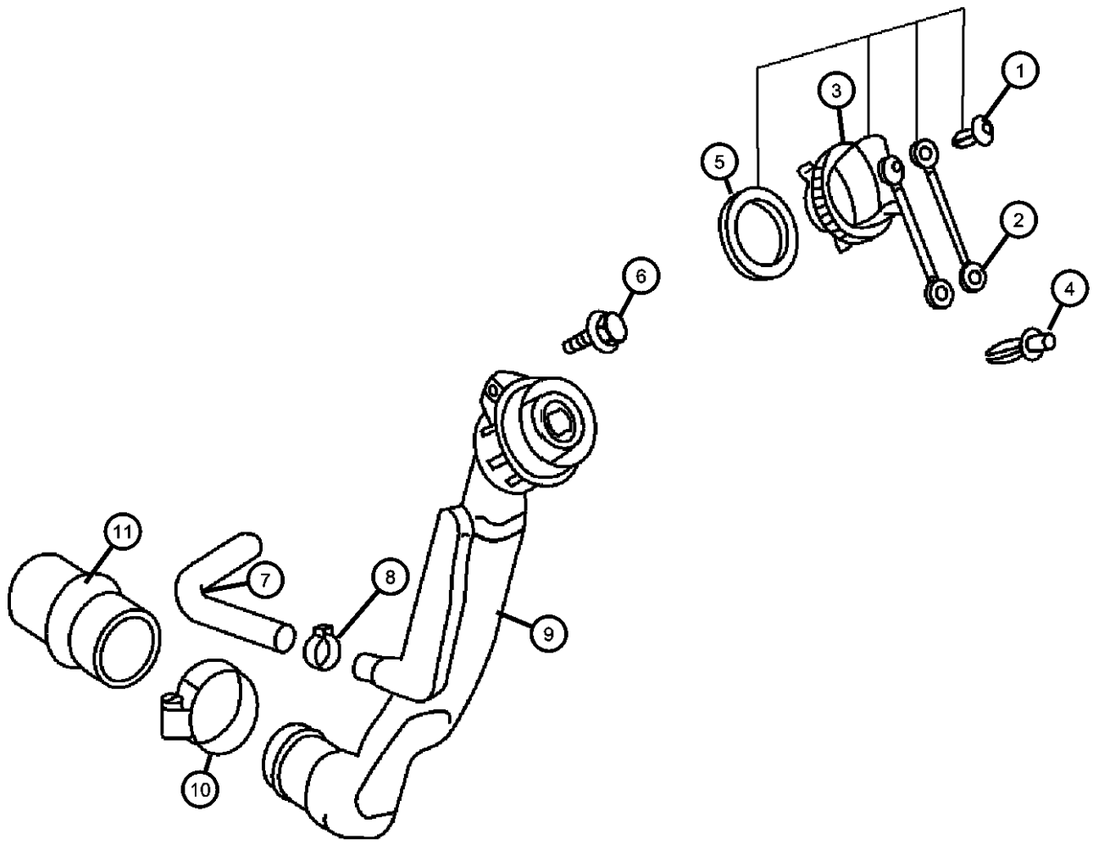

ITEM	PART NUMBER	QTY	LINE	SERIES	BODY	ENGINE	TRANS	TRIM	DESCRIPTION
Sales Codes:EX8=ENGINE-2.7L I5 MERCEDES TURBO DGJ=TRANSMISSION - 5-SPD AUTO									
1									RIVET
	06104903AA	1	2, 6	L	01, 02, 06				
		1	2, 6	L	11, 12, 14, 15, 16				
		1	2, 6	L	51, 52, 54, 55, 56				
		1	3, 7	L	02, 06				
		1	3, 7	L	12, 15, 16				
2									TETHER, Fuel Filler Cap
	05133915AA	1	2, 6	L	01, 02, 06				
		1	2, 6	L	11, 12, 14, 15, 16				
		1	2, 6	L	51, 52, 54, 55, 56				
		1	3, 7	L	02, 06				
		1	3, 7	L	12, 15, 16				
3									CAP, Fuel Filler
	05119573AA	1	3, 7	L	12, 15, 16				
		1	2, 6	L	01, 02, 06				
		1	2, 6	L	11, 12, 14, 15, 16				
		1	2, 6	L	51, 52, 54, 55, 56				
4									RIVET
	05103787AA	1	2, 6	L	01, 02, 06				
		1	2, 6	L	11, 12, 14, 15, 16				
		1	2, 6	L	51, 52, 54, 55, 56				
		1	3, 7	L	12, 15, 16				
5									SEAL, Fuel Cap

SPRINTER (VA)

SERIES	LINE	BODY	ENGINE	TRANSMISSION
L = LOWLINE	3 = HD DODGE 2WD 6 = Lt. Duty DODGE 4WD 2 = Med. Duty DODGE 2WD 7 = Med. Duty DODGE 4WD	55 = Wagon 140" 54 = Wagon 118" 52 = Wagon 140" 51 = Wagon 118" 12 = Van 140" 11 = Van 118" 06 = Front Section 158" 14 = Van 118" 15 = Van 140" 16 = Van 158" 56 = Wagon 158" 01 = Chassis Forward Control 118" 02 = Chassis Forward Control 140"	EX8 = Engine-2.7L I5 Mercedes Turbo Diesel	DGJ = Transmission-5-Spd. Automatic,W5A580

Fuel Tank Filler Tube
Figure 14-210

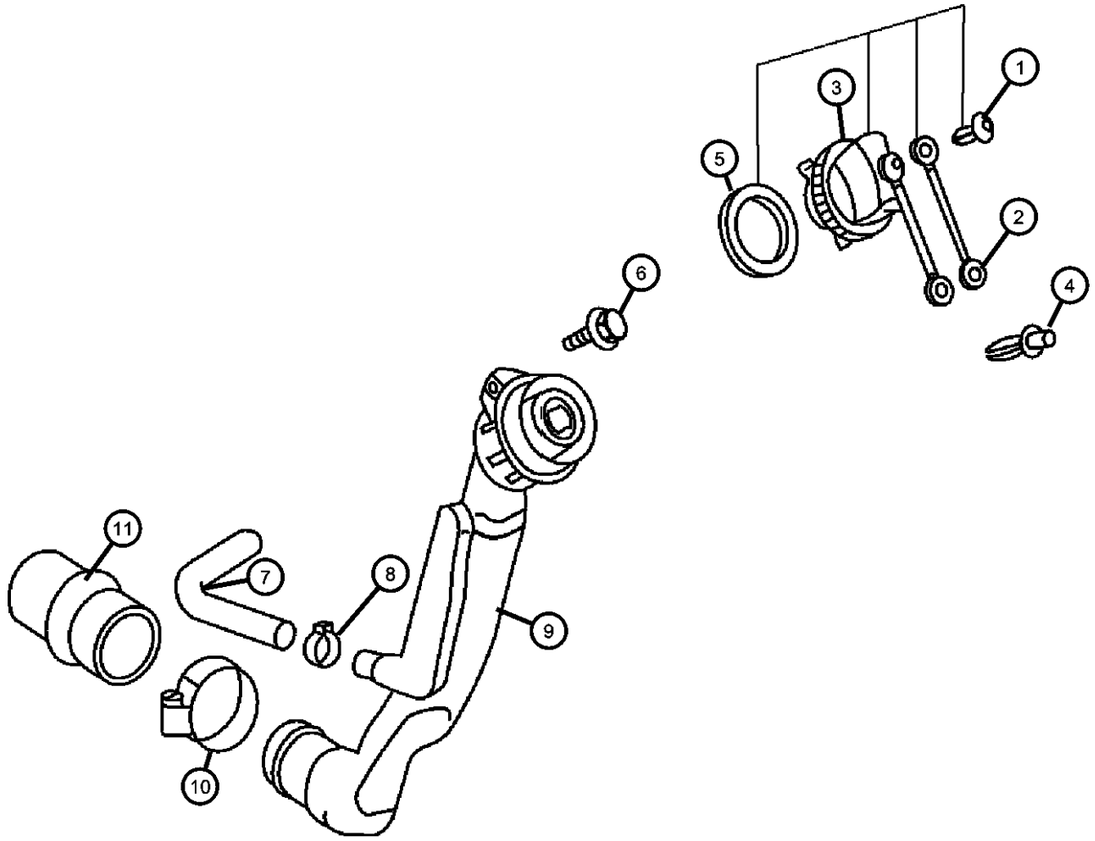

ITEM	PART NUMBER	QTY	LINE	SERIES	BODY	ENGINE	TRANS	TRIM	DESCRIPTION
	05133916AA	1	2, 6	L	01, 02, 06				
		1	2, 6	L	11, 12, 14, 15, 16				
		1	2, 6	L	51, 52, 54, 55, 56				
		1	3, 7	L	12, 15, 16				
6									SCREW, Fuel Filler Tube Mounting
	06104515AA	1	2, 6	L	11, 12, 14, 15, 16				
		1	2, 6	L	51, 52, 54, 55, 56				
		1	3, 7	L	02, 06				
		1	2, 6	L	01, 02, 06				
		1	3, 7	L	12, 15, 16				
7									HOSE
	05103949AA	1	2, 6	L	01, 02, 06				1 Meter Long
		1	2, 6	L	11, 12, 14, 15, 16				1 Meter Long
		1	2, 6	L	51, 52, 54, 55, 56				1 Meter Long
		1	3, 7	L	12, 15, 16				1 Meter Long
8									CLAMP
	06104780AA	4	2, 6	L	11, 12, 14, 15, 16				
		4	2, 6	L	51, 52, 54, 55, 56				
		4	3, 7	L	12, 15, 16				
	06104787AA	1	2, 6	L	01, 02, 06				
9									TUBE, Fuel Filler
	05104103AA	1	2, 6	L	01, 02, 06	EX8, EX9			
		1	2, 6	L	11, 12, 14, 15, 16	EX8, EX9			

SPRINTER (VA)

SERIES	LINE	BODY	ENGINE	TRANSMISSION
L = LOWLINE	3 = HD DODGE 2WD 6 = Lt. Duty DODGE 4WD 2 = Med. Duty DODGE 2WD 7 = Med. Duty DODGE 4WD	55 = Wagon 140" 54 = Wagon 118" 52 = Wagon 140" 51 = Wagon 118" 12 = Van 140" 11 = Van 118" 06 = Front Section 158" 14 = Van 118" 15 = Van 140" 16 = Van 158" 56 = Wagon 158" 01 = Chassis Forward Control 118" 02 = Chassis Forward Control 140"	EX8 = Engine-2.7L I5 Mercedes Turbo Diesel	DGJ = Transmission-5-Spd. Automatic,W5A580

Fuel Tank Filler Tube
Figure 14-210

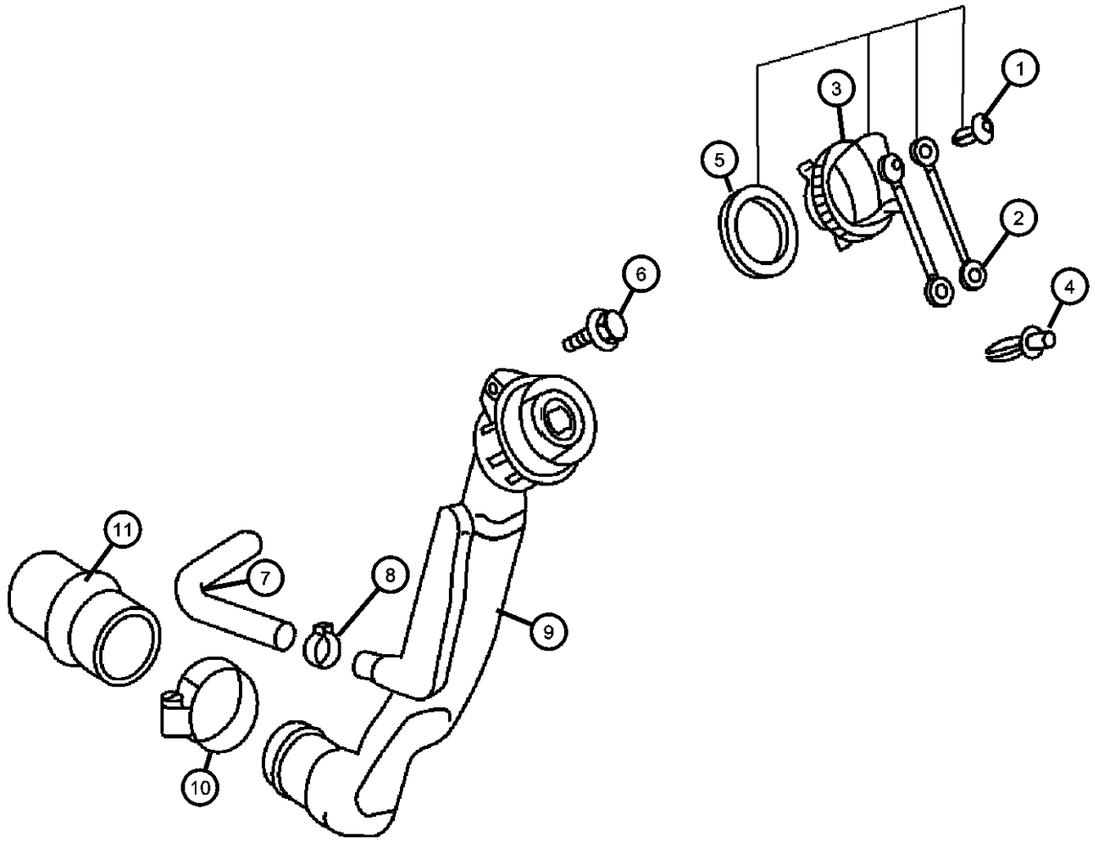

ITEM	PART NUMBER	QTY	LINE	SERIES	BODY	ENGINE	TRANS	TRIM	DESCRIPTION
		1	2, 6	L	51, 52, 54, 55, 56	EX8, EX9			
		1	3, 7	L	02, 06	EX8, EX9			
		1	3, 7	L	12, 15, 16	EX8, EX9			
10									CLAMP, Hose
	05104601AA	2	2, 6	L	01, 02, 06				
		2	2, 6	L	11, 12, 14, 15, 16				
		2	2, 6	L	51, 52, 54, 55, 56				
		2	3, 7	L	12, 15, 16				
11									HOSE
	05119668AA	1	3, 7	L	02, 06	EX8, EX9			
		1	2, 6	L	51, 52, 54, 55, 56	EX8, EX9			

SPRINTER (VA)

SERIES	LINE	BODY	ENGINE	TRANSMISSION
L = LOWLINE	3 = HD DODGE 2WD 6 = Lt. Duty DODGE 4WD 2 = Med. Duty DODGE 2WD 7 = Med. Duty DODGE 4WD	55 = Wagon 140" 54 = Wagon 118" 52 = Wagon 140" 51 = Wagon 118" 12 = Van 140" 11 = Van 118" 06 = Front Section 158" 14 = Van 118" 15 = Van 140" 16 = Van 158" 56 = Wagon 158" 01 = Chassis Forward Control 118" 02 = Chassis Forward Control 140"	EX8 = Engine-2.7L I5 Mercedes Turbo Diesel	DGJ = Transmission-5-Spd. Automatic,W5A580

Fuel Lines
Figure 14-310

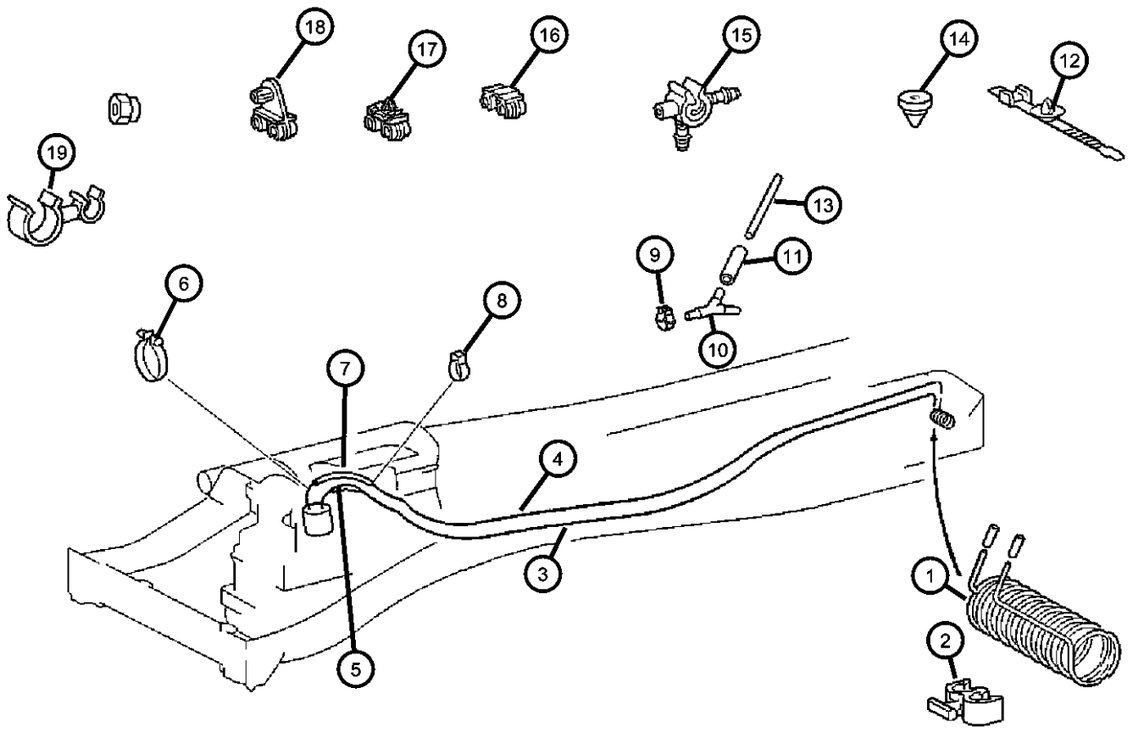

ITEM	PART NUMBER	QTY	LINE	SERIES	BODY	ENGINE	TRANS	TRIM	DESCRIPTION
1									COOLER, Fuel, Diesel
	05127509AA	1	2, 6	L	11, 12, 14, 15, 16	EX8			
		1	2, 6	L	51, 52, 54, 55, 56	EX8			
		1	3, 7	L	02, 06	EX8			
		1	3, 7	L	12, 15, 16	EX8			
		1	2, 6	L	01, 02, 06	EX8			
2									CLIP, Fuel Line
	05119694AA	3	3, 7	L	12, 15, 16	EX9			
		3	2, 6	L	01, 02, 06	EX9			
		3	2, 6	L	11, 12, 14, 15, 16	EX9			
		3	2, 6	L	51, 52, 54, 55, 56	EX9			
		3	3, 7	L	02, 06	EX9			
3									TUBE, Nylon Straight
	05125494AA	152	2, 6	L	01, 02, 06	EX9			
		152	2, 6	L	11, 12, 14, 15, 16	EX9			
		152	2, 6	L	51, 52, 54, 55, 56	EX9			
		152	3, 7	L	02, 06	EX9			
		152	3, 7	L	12, 15, 16	EX9			
4									TUBE, Fuel
	05119643AA	1	2, 6	L	11, 12, 14, 15, 16	EX9			
		1	2, 6	L	51, 52, 54, 55, 56	EX9			
		1	3, 7	L	12, 15, 16	EX9			
5	05119683AA	1	2, 3, 6, 7	L		EX8	DGJ		HOSE, Fuel
6									STRAP, Tie
	05133402AA	15	2, 6	L	11, 14				

SPRINTER (VA)

SERIES	LINE	BODY	ENGINE	TRANSMISSION
L = LOWLINE	3 = HD DODGE 2WD 6 = Lt. Duty DODGE 4WD 2 = Med. Duty DODGE 2WD 7 = Med. Duty DODGE 4WD	55 = Wagon 140" 54 = Wagon 118" 52 = Wagon 140" 51 = Wagon 118" 12 = Van 140" 11 = Van 118" 06 = Front Section 158" 14 = Van 118" 15 = Van 140" 16 = Van 158" 56 = Wagon 158" 01 = Chassis Forward Control 118" 02 = Chassis Forward Control 140"	EX8 = Engine-2.7L I5 Mercedes Turbo Diesel	DGJ = Transmission-5-Spd. Automatic,W5A580

Fuel Lines
Figure 14-310

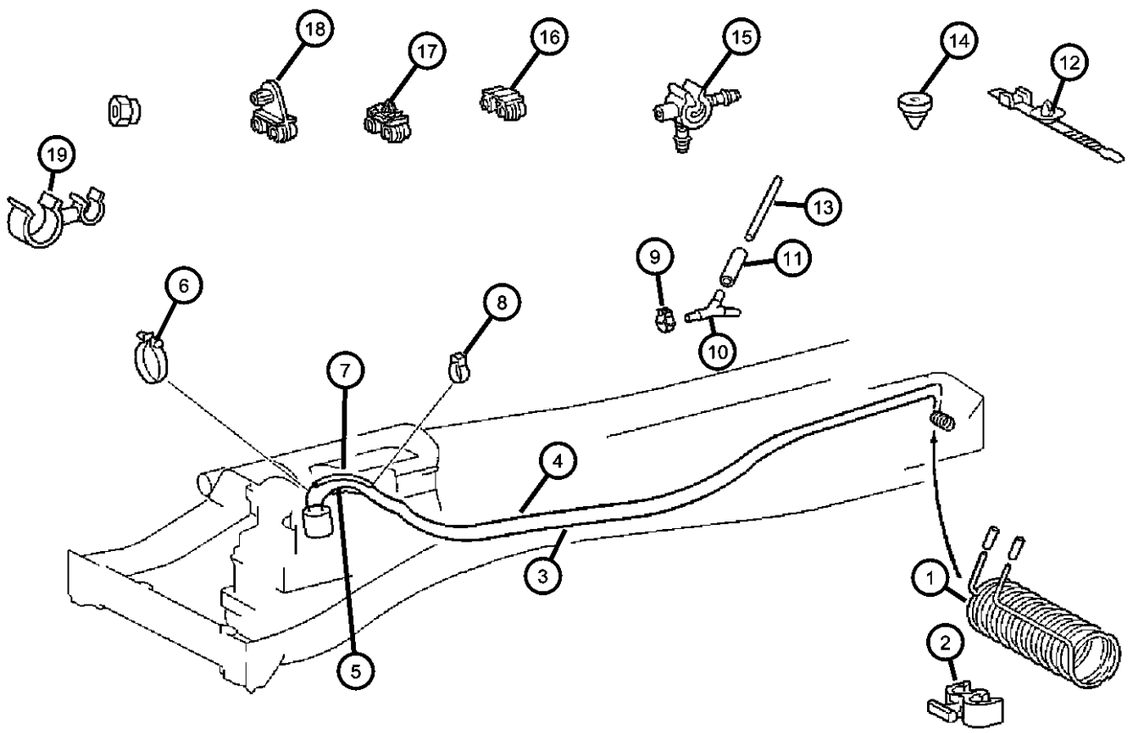

ITEM	PART NUMBER	QTY	LINE	SERIES	BODY	ENGINE	TRANS	TRIM	DESCRIPTION
	05133690AA	8	2, 6	L	01, 02, 06				
		8	2, 6	L	11, 12, 14, 15, 16				
		8	2, 6	L	51, 52, 54, 55, 56				
		8	3, 7	L	02, 06				
		8	3, 7	L	12, 15, 16				
7									HOSE
	05119673AA	1	3, 7	L	02, 06	EX9			
		1	3, 7	L	12, 15, 16	EX9			
		1	2, 6	L	01, 02, 06	EX9			
		1	2, 6	L	11, 12, 14, 15, 16	EX9			
		1	2, 6	L	51, 52, 54, 55, 56	EX9			
8									CLAMP, Hose
	05126025AA	1	2, 6	L	01, 02, 06				
		2	3, 7	L	12, 15, 16				
		1	2, 6	L	11, 12, 14, 15, 16				
		2	2, 6	L	51, 52, 54, 55, 56				
		1	3, 7	L	02, 06				
9									CLAMP
	05133923AA	1	3, 7	L	12, 15, 16	EX9			
		1	2, 6	L	01, 02, 06				
		1	2, 6	L	11, 12, 14, 15, 16				
		1	2, 6	L	51, 52, 54, 55, 56				
10									CONNECTOR, Fuel Line
	05133920AA	1	2, 6	L	01, 02, 06				

SPRINTER (VA)

SERIES	LINE	BODY	ENGINE	TRANSMISSION
L = LOWLINE	3 = HD DODGE 2WD 6 = Lt. Duty DODGE 4WD 2 = Med. Duty DODGE 2WD 7 = Med. Duty DODGE 4WD	55 = Wagon 140" 54 = Wagon 118" 52 = Wagon 140" 51 = Wagon 118" 12 = Van 140" 11 = Van 118" 06 = Front Section 158" 14 = Van 118" 15 = Van 140" 16 = Van 158" 56 = Wagon 158" 01 = Chassis Forward Control 118" 02 = Chassis Forward Control 140"	EX8 = Engine-2.7L I5 Mercedes Turbo Diesel	DGJ = Transmission-5-Spd. Automatic,W5A580

Fuel Lines
Figure 14-310

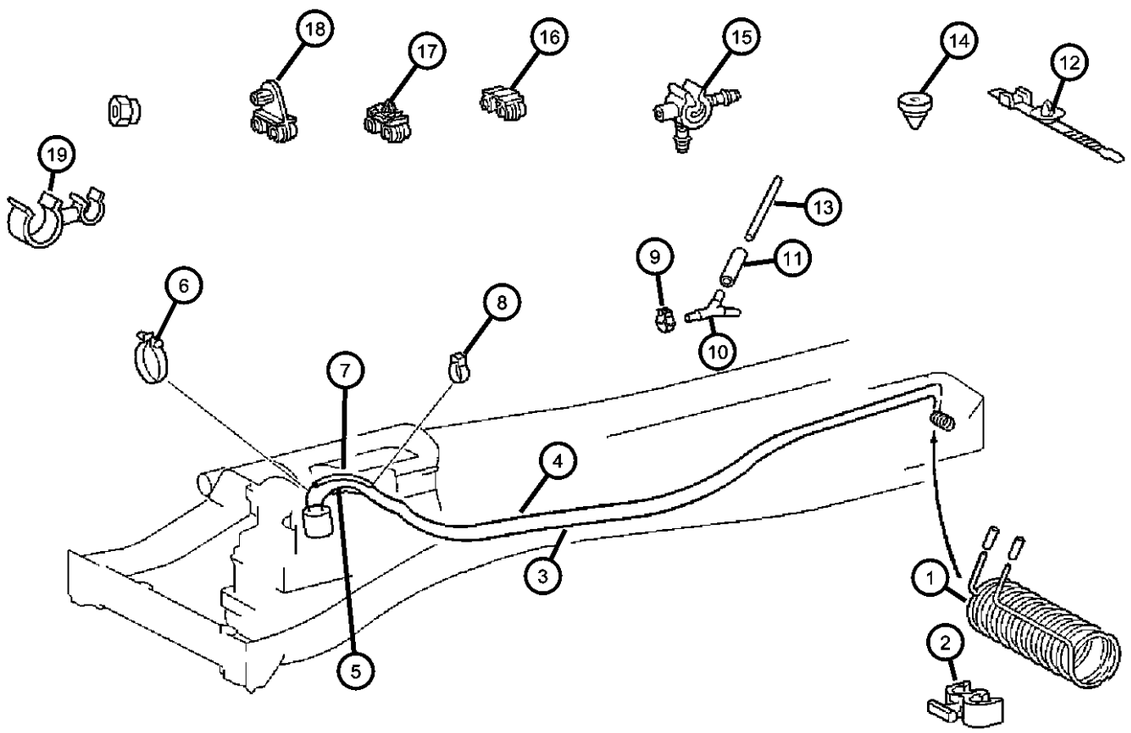

ITEM	PART NUMBER	QTY	LINE	SERIES	BODY	ENGINE	TRANS	TRIM	DESCRIPTION
		1	2, 6	L	11, 12, 14, 15, 16				
		1	2, 6	L	51, 52, 54, 55, 56				
		1	3, 7	L	12, 15, 16	EX9			
11									HOSE
	05104491AA	1	2, 6	L	01, 02, 06	EX9			
		1	2, 6	L	11, 12, 14, 15, 16	EX9			
		1	2, 6	L	51, 52, 54, 55, 56	EX9			
		1	3, 7	L	02, 06	EX9			
		1	3, 7	L	12, 15, 16	EX9			
12									TIE STRAP, Push In
	05126078AA	2	2, 6	L	51, 52, 54, 55, 56	EX8			
		2	3, 7	L	02, 06	EX8			
		2	2, 6	L	01, 02, 06	EX8			
		2	2, 6	L	11, 12, 14, 15, 16	EX8			
		2	3, 7	L	12, 15, 16	EX8			
13									PIPE, Fuel
	05133633AA	100	2, 6	L	11, 12, 14, 15, 16				1 Meter Long
		100	2, 6	L	51, 52, 54, 55, 56				1 Meter Long
		900	3, 7	L	12, 15, 16	EX9			1 Meter Long
		100	2, 6	L	01, 02, 06				1 Meter Long
14									BUMPER, Rubber
	05125501AA	2	2, 6	L	01, 02, 06				
		2	2, 6	L	11, 12, 14, 15, 16				

SPRINTER (VA)

SERIES	LINE	BODY	ENGINE	TRANSMISSION
L = LOWLINE	3 = HD DODGE 2WD 6 = Lt. Duty DODGE 4WD 2 = Med. Duty DODGE 2WD 7 = Med. Duty DODGE 4WD	55 = Wagon 140" 54 = Wagon 118" 52 = Wagon 140" 51 = Wagon 118" 12 = Van 140" 11 = Van 118" 06 = Front Section 158" 14 = Van 118" 15 = Van 140" 16 = Van 158" 56 = Wagon 158" 01 = Chassis Forward Control 118" 02 = Chassis Forward Control 140"	EX8 = Engine-2.7L I5 Mercedes Turbo Diesel	DGJ = Transmission-5-Spd. Automatic,W5A580

Fuel Lines
Figure 14-310

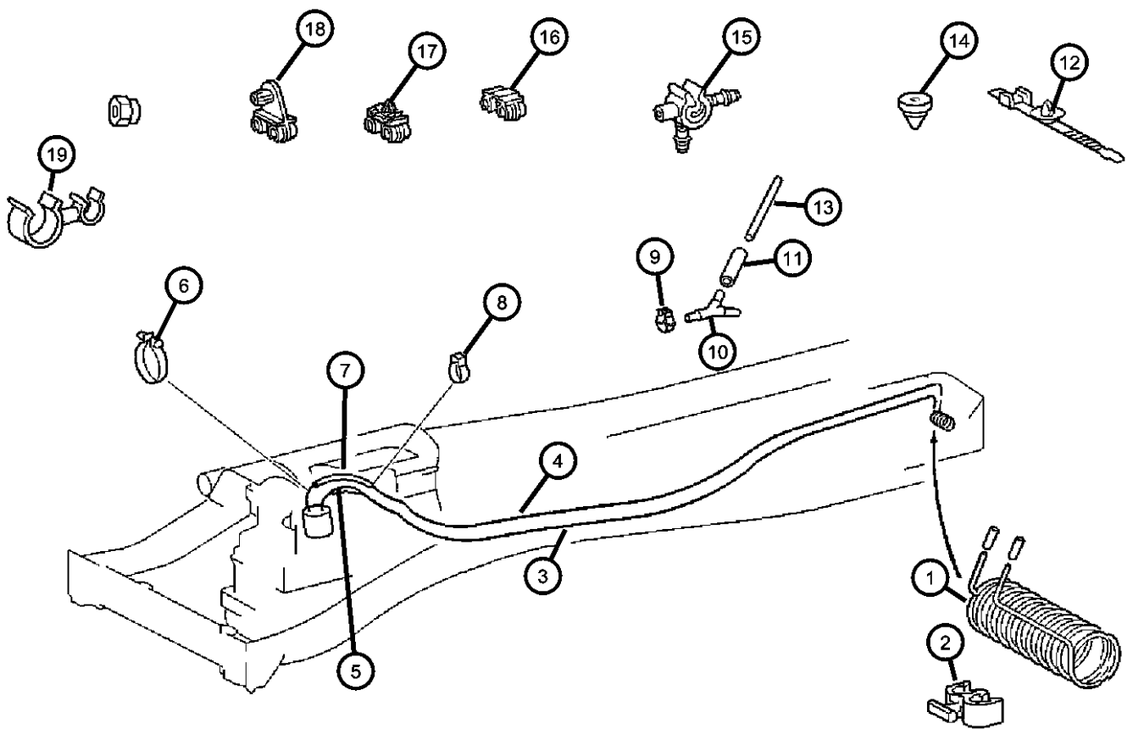

ITEM	PART NUMBER	QTY	LINE	SERIES	BODY	ENGINE	TRANS	TRIM	DESCRIPTION
		2	2, 6	L	51, 52, 54, 55, 56				
		2	3, 7	L	12, 15, 16				
15									CLIP, Retaining
	06104924AA	1	2, 6	L	01, 02, 06				
		1	2, 6	L	11, 12, 14, 15, 16				
		1	2, 6	L	51, 52, 54, 55, 56				
		1	3, 7	L	02, 06				
		1	3, 7	L	12, 15, 16	EX8, EX9			
16									BRACKET, Fuel Line
	05104106AA	2	2, 6	L	51, 52, 54, 55, 56	EX8, EX9			
		2	3, 7	L	02, 06	EX8, EX9			
		2	3, 7	L	12, 15, 16	EX9, EX8			
		2	2, 6	L	01, 02, 06	EX8, EX9			
17									CLIP, Fuel Line
	05119690AA	1	2, 6	L	11, 12, 14, 15, 16	EX8, EX9			
		1	2, 6	L	51, 52, 54, 55, 56	EX8, EX9			
		1	3, 7	L	02, 06	EX8, EX9			
		1	3, 7	L	12, 15, 16	EX8, EX9			
		1	2, 6	L	01, 02, 06	EX8, EX9			
18									BRACKET, Fuel Line
	05104105AA	1	2, 6	L	01, 02, 06	EX8, EX9			
		1	2, 6	L	11, 12, 14, 15, 16	EX8, EX9			
		1	2, 6	L	51, 52, 54, 55, 56	EX8, EX9			
		1	3, 7	L	02, 06	EX8, EX9			

SPRINTER (VA)

SERIES	LINE	BODY	ENGINE	TRANSMISSION
L = LOWLINE	3 = HD DODGE 2WD 6 = Lt. Duty DODGE 4WD 2 = Med. Duty DODGE 2WD 7 = Med. Duty DODGE 4WD	55 = Wagon 140" 54 = Wagon 118" 52 = Wagon 140" 51 = Wagon 118" 12 = Van 140" 11 = Van 118" 06 = Front Section 158" 14 = Van 118" 15 = Van 140" 16 = Van 158" 56 = Wagon 158" 01 = Chassis Forward Control 118" 02 = Chassis Forward Control 140"	EX8 = Engine-2.7L I5 Mercedes Turbo Diesel	DGJ = Transmission-5-Spd. Automatic,W5A580

Fuel Lines
Figure 14-310

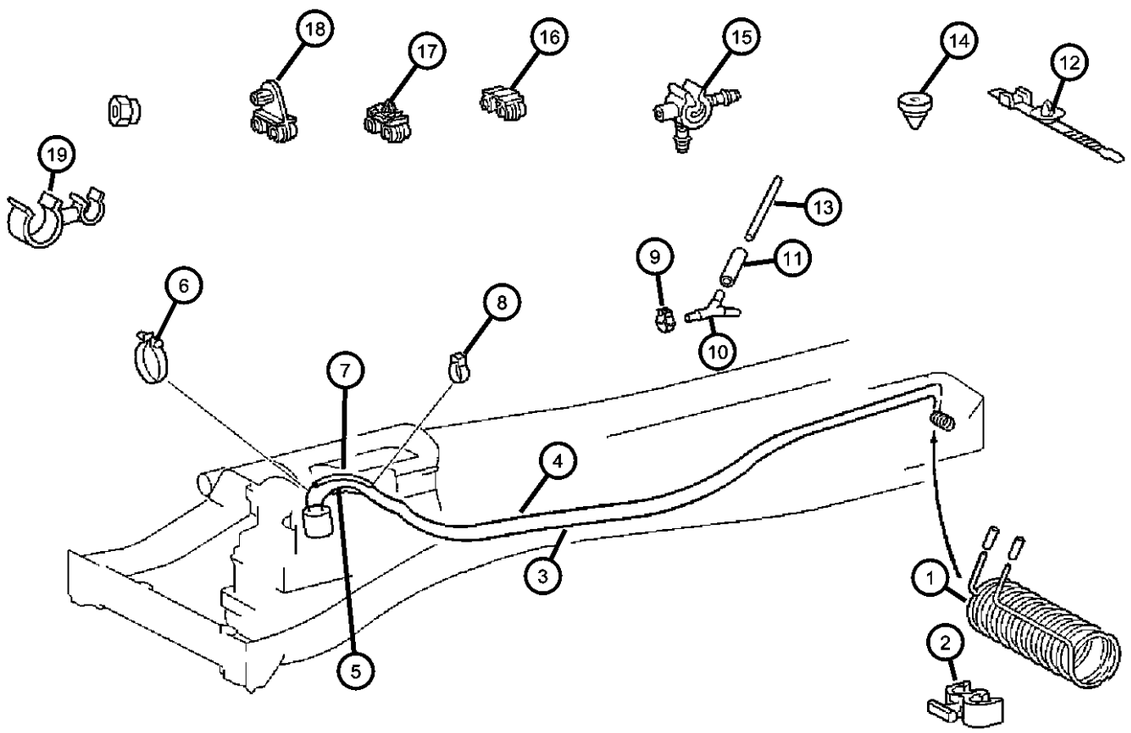

ITEM	PART NUMBER	QTY	LINE	SERIES	BODY	ENGINE	TRANS	TRIM	DESCRIPTION
		1	3, 7	L	12, 15, 16	EX8, EX9			
19									CLAMP
	05080437AB	1	2, 6	L	11, 12, 14, 15, 16	EX8			
		99	2, 6	L	51, 52, 54, 55, 56				
		1	2, 6	L	51, 52, 54, 55, 56	EX8			
		99	2, 6	L	01, 02, 06				
		99	2, 6	L	11, 12, 14, 15, 16				
		2	3, 7	L	02, 06	EX9			
		2	3, 7	L	12, 15, 16	EX9			
		2	3, 7	L	12, 15, 16				

SPRINTER (VA)

SERIES	LINE	BODY	ENGINE	TRANSMISSION
L = LOWLINE	3 = HD DODGE 2WD 6 = Lt. Duty DODGE 4WD 2 = Med. Duty DODGE 2WD 7 = Med. Duty DODGE 4WD	55 = Wagon 140" 54 = Wagon 118" 52 = Wagon 140" 51 = Wagon 118" 12 = Van 140" 11 = Van 118" 06 = Front Section 158" 14 = Van 118" 15 = Van 140" 16 = Van 158" 56 = Wagon 158" 01 = Chassis Forward Control 118" 02 = Chassis Forward Control 140"	EX8 = Engine-2.7L I5 Mercedes Turbo Diesel	DGJ = Transmission-5-Spd. Automatic,W5A580

Fuel Line and Filter
Figure 14-320

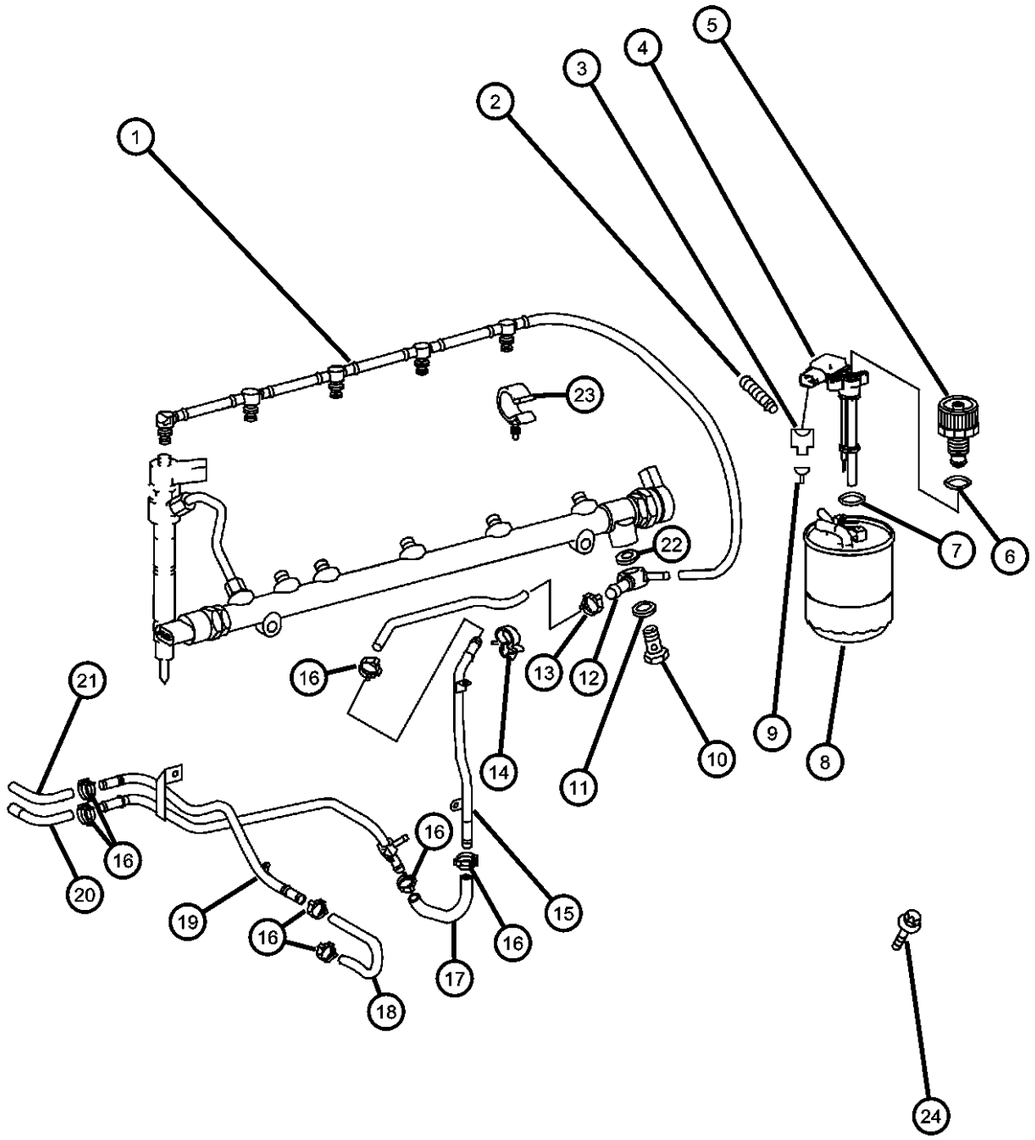

ITEM	PART NUMBER	QTY	LINE	SERIES	BODY	ENGINE	TRANS	TRIM	DESCRIPTION
1	05080487AA	1		L		EX8			TUBE
2	05135867AA	900		L		EX9			INSULATOR
3	05135845AA	1		L		EX9			CONNECTOR, Wiring Repair
4	05117542AA	1		L		EX8			SENSOR, Fuel/Water
5	05073900AA	1							SCREW
6	05179861AA	2	2, 3, 6, 7	L		EX8	DGJ		O RING
7	05138876AA	1		L		EX8			O RING
8	05117494AA	1		L		EX8			FILTER, Fuel
9	05135801AA	99		L		EX9			WIRING REPAIR KIT, Diesel Engine
10	05080339AA	1		L		EX8			BOLT, Banjo
11	05104625AA	2	2, 3, 6, 7	L		EX8			O RING
12	05103977AA	1		L		EX8			UNION
13	05080439AB	1		L		EX8			CLAMP
14	05080091AB	1		L		EX8			CLAMP
15	05137327AA	1		L					TUBE, Fuel
16	05080439AC	2		L		EX8			CLAMP
17	05137356AA	1		L		EX8			HOSE, Fuel
18	05137341AA	1		L		EX8			HOSE, Fuel
19	05137332AA	1		L					TUBE
20	05174009AA	1	2, 3, 6, 7	L		EX8	DGJ		HOSE, Fuel
21	05174008AA	1	2, 3, 6, 7	L		EX8	DGJ		HOSE, Fuel
22	05104625AA	2	2, 3, 6, 7	L		EX8			O RING
23	05080431AB	1		L		EX9			CLAMP
24	05073723AB	3		L					SCREW

SPRINTER (VA)

SERIES	LINE	BODY	ENGINE	TRANSMISSION
L = LOWLINE	3 = HD DODGE 2WD 6 = Lt. Duty DODGE 4WD 2 = Med. Duty DODGE 2WD 7 = Med. Duty DODGE 4WD	55 = Wagon 140" 54 = Wagon 118" 52 = Wagon 140" 51 = Wagon 118" 12 = Van 140" 11 = Van 118" 06 = Front Section 158" 14 = Van 118" 15 = Van 140" 16 = Van 158" 56 = Wagon 158" 01 = Chassis Forward Control 118" 02 = Chassis Forward Control 140"	EX8 = Engine-2.7L I5 Mercedes Turbo Diesel	DGJ = Transmission-5-Spd. Automatic,W5A580

Injection System [EX8]
Figure 14-410

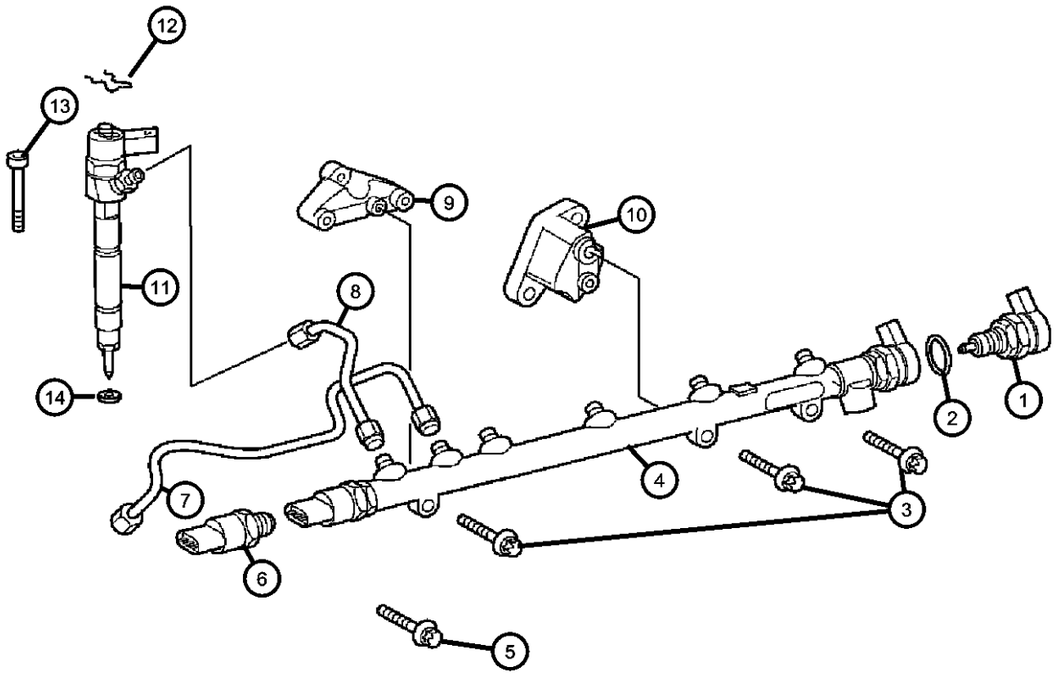

ITEM	PART NUMBER	QTY	LINE	SERIES	BODY	ENGINE	TRANS	TRIM	DESCRIPTION
Sales Codes:EX9=ENGINE-2.7L I5 MERCEDES TURBO DGJ=TRANSMISSION - 5-SPD AUTO									
1	05137291AA	1		L		EX8			VALVE
2	05138007AA	1		L					O RING
3	05073701AA	3		L		EX8			SCREW
4	05137290AA	1		L		EX8			RAIL, Fuel
5									SCREW
	05073701AA	3		L		EX9			
	05073824AA	2		L					
6	05117543AA	1		L		EX8			SENDING UNIT, Fuel
7	05117421AA	1		L		EX8			TUBE, Fuel Injector Supply
8	05117422AA	5		L		EX8			TUBE, Fuel Injector Supply
9	05117449AA	1		L		EX8			CLIP, Fuel Injector
10	05117450AA	1		L		EX8			CLIP, Fuel Injector
11	05137297AB	5		L		EX8			INJECTOR, Fuel
12	05086296AA	5		L		EX9			CLIP, Fuel Injector
13	05073719AA	5		L					SCREW
14	05080301AA	5		L		EX9			O RING, Fuel Injector

SPRINTER (VA)

SERIES	LINE	BODY	ENGINE	TRANSMISSION
L = LOWLINE	3 = HD DODGE 2WD 6 = Lt. Duty DODGE 4WD 2 = Med. Duty DODGE 2WD 7 = Med. Duty DODGE 4WD	55 = Wagon 140" 54 = Wagon 118" 52 = Wagon 140" 51 = Wagon 118" 12 = Van 140" 11 = Van 118" 06 = Front Section 158" 14 = Van 118" 15 = Van 140" 16 = Van 158" 56 = Wagon 158" 01 = Chassis Forward Control 118" 02 = Chassis Forward Control 140"	EX8 = Engine-2.7L I5 Mercedes Turbo Diesel	DGJ = Transmission-5-Spd. Automatic,W5A580

AR = use ase required - = Non illustrrated part

Fuel Module
Figure 14-510

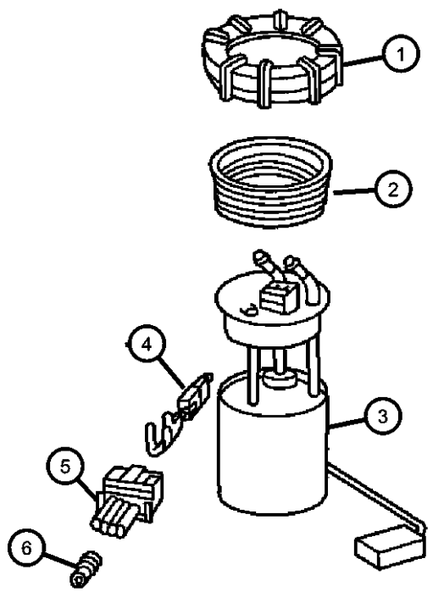

ITEM	PART NUMBER	QTY	LINE	SERIES	BODY	ENGINE	TRANS	TRIM	DESCRIPTION
Sales Codes:EX8=2.7L I5 MERCEDES-BENZ DGJ=TRANSMISSION - 5-SPD AUTO									
1									NUT, Fuel Pump Module
	05104539AA	1	2, 6	L	01, 02, 06				
		1	2, 6	L	11, 12, 14, 15, 16				
		1	2, 6	L	51, 52, 54, 55, 56				
		1	3, 7	L	02, 06				
		1	3, 7	L	12, 15, 16				
2									SEAL, Fuel Pump and Level Unit
	05119613AA	1	2, 6	L	51, 52, 54, 55, 56				
		1	3, 7	L	02, 06				
		1	3, 7	L	12, 15, 16				
		1	2, 6	L	01, 02, 06				
		1	2, 6	L	11, 12, 14, 15, 16				
3									MODULE, Fuel Tank - Diesel
	05119607AA	1	3, 7	L	12, 15, 16	EX8			With heater booster
	05119605AA	1	2, 6	L	11, 12, 14, 15, 16	EX8			
		1	2, 6	L	51, 52, 54, 55, 56	EX8			
		1	3, 7	L	02, 06	EX8			
		1	3, 7	L	12, 15, 16	EX8			
		1	3, 7	L	02, 06	EX8			With heater booster
		1	2, 6	L	01, 02, 06	EX8			With heater booster
		1	2, 6	L	11, 12, 14, 15, 16	EX8			With heater booster
		1	2, 6	L	51, 52, 54, 55, 56	EX8			With heater booster
4									TERMINAL

SPRINTER (VA)

SERIES	LINE	BODY	ENGINE	TRANSMISSION
L = LOWLINE	3 = HD DODGE 2WD 6 = Lt. Duty DODGE 4WD 2 = Med. Duty DODGE 2WD 7 = Med. Duty DODGE 4WD	55 = Wagon 140" 54 = Wagon 118" 52 = Wagon 140" 51 = Wagon 118" 12 = Van 140" 11 = Van 118" 06 = Front Section 158" 14 = Van 118" 15 = Van 140" 16 = Van 158" 56 = Wagon 158" 01 = Chassis Forward Control 118" 02 = Chassis Forward Control 140"	EX8 = Engine-2.7L I5 Mercedes Turbo Diesel	DGJ = Transmission-5-Spd. Automatic,W5A580

Fuel Module
Figure 14-510

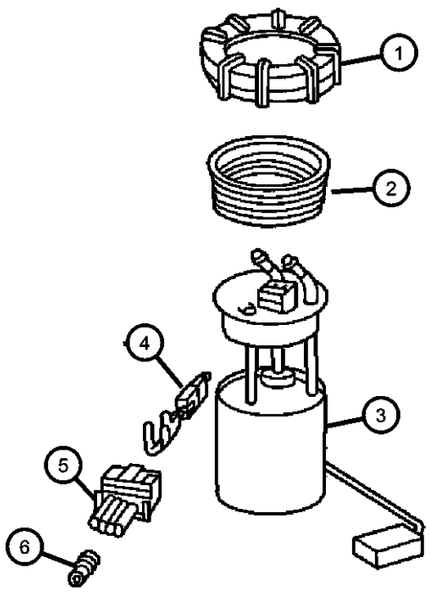

ITEM	PART NUMBER	QTY	LINE	SERIES	BODY	ENGINE	TRANS	TRIM	DESCRIPTION
	05102935AA	1	2, 6	L	01, 02, 06				
		1	2, 6	L	11, 12, 14, 15, 16				
		1	2, 6	L	51, 52, 54, 55, 56				
		1	3, 7	L	02, 06				
5									CONNECTOR
	05120544AA	1	3, 7	L	12, 15, 16				
		1	2, 6	L	01, 02, 06				
		1	2, 6	L	11, 12, 14, 15, 16				
		1	2, 6	L	51, 52, 54, 55, 56				
6									GASKET
	05103661AA	99	2, 6	L	01, 02, 06				
		1	2, 6	L	11, 12, 14, 15, 16				
		1	2, 6	L	51, 52, 54, 55, 56				
		99	3, 7	L	02, 06				
		1	3, 7	L	12, 15, 16				

SPRINTER (VA)

SERIES	LINE	BODY	ENGINE	TRANSMISSION
L = LOWLINE	3 = HD DODGE 2WD 6 = Lt. Duty DODGE 4WD 2 = Med. Duty DODGE 2WD 7 = Med. Duty DODGE 4WD	55 = Wagon 140" 54 = Wagon 118" 52 = Wagon 140" 51 = Wagon 118" 12 = Van 140" 11 = Van 118" 06 = Front Section 158" 14 = Van 118" 15 = Van 140" 16 = Van 158" 56 = Wagon 158" 01 = Chassis Forward Control 118" 02 = Chassis Forward Control 140"	EX8 = Engine-2.7L I5 Mercedes Turbo Diesel	DGJ = Transmission-5-Spd. Automatic,W5A580

AR = use ase required - = Non illustrrated part

Fuel Injection Pump [EX8]
Figure 14-610

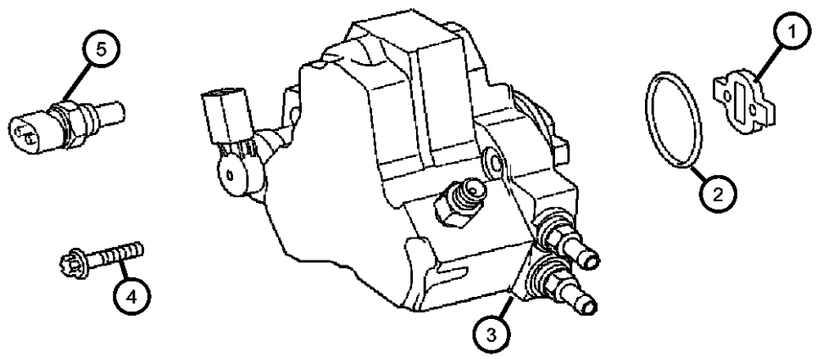

ITEM	PART NUMBER	QTY	LINE	SERIES	BODY	ENGINE	TRANS	TRIM	DESCRIPTION
Sales Codes:EX8=2.7L I5 MERCEDES-BENZ DGJ=TRANSMISSION - 5-SPD AUTO									
1	05103610AA	1		L					DRIVE, Fuel Pump
2	05080115AA	1		L					O RING
3	05137289AA	1		L		EX8			PUMP, Injection
4	05125739AA	3		L		EX8			SCREW
5	05103534AB	1		L					SENDING UNIT, Temperature Gauge
-6	05142115AA	1		L		EX8			VALVE, Flow Control

SPRINTER (VA)

SERIES	LINE	BODY	ENGINE	TRANSMISSION
L = LOWLINE	3 = HD DODGE 2WD 6 = Lt. Duty DODGE 4WD 2 = Med. Duty DODGE 2WD 7 = Med. Duty DODGE 4WD	55 = Wagon 140" 54 = Wagon 118" 52 = Wagon 140" 51 = Wagon 118" 12 = Van 140" 11 = Van 118" 06 = Front Section 158" 14 = Van 118" 15 = Van 140" 16 = Van 158" 56 = Wagon 158" 01 = Chassis Forward Control 118" 02 = Chassis Forward Control 140"	EX8 = Engine-2.7L I5 Mercedes Turbo Diesel	DGJ = Transmission-5-Spd. Automatic,W5A580

Turbo Charger
Figure 14-630

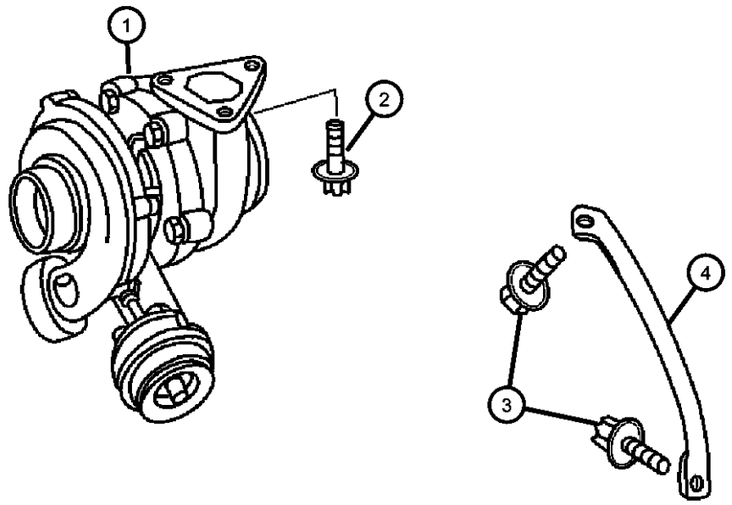

ITEM	PART NUMBER	QTY	LINE	SERIES	BODY	ENGINE	TRANS	TRIM	DESCRIPTION
Sales Codes:EX8=ENGINE-2.7L I5 MERCEDES TURBO DGJ=TRANSMISSION - 5-SPD AUTO									
1	05117505AA	1		L		EX8			TURBOCHARGER, The wastgate actuator is service with the turbo
2	05073720AB	3		L					SCREW
3	05073720AB	3		L					SCREW
4	05137201AA	1		L					BRACKET, Turbo Charger
-5	05080371AA	1		L		EX9			REGULATOR, Pressure
-6	05137154AA	1		L					RESONATOR, Turbo, See Group 7 ILL#130
-7	05139047AA	1		L		EX8			O RING
-8	05138048AA	1		L					O RING
-9	05117529AA	1		L		EX8			GASKET, Exhaust Manifold To Turbo

SPRINTER (VA)

SERIES	LINE	BODY	ENGINE	TRANSMISSION
L = LOWLINE	3 = HD DODGE 2WD 6 = Lt. Duty DODGE 4WD 2 = Med. Duty DODGE 2WD 7 = Med. Duty DODGE 4WD	55 = Wagon 140" 54 = Wagon 118" 52 = Wagon 140" 51 = Wagon 118" 12 = Van 140" 11 = Van 118" 06 = Front Section 158" 14 = Van 118" 15 = Van 140" 16 = Van 158" 56 = Wagon 158" 01 = Chassis Forward Control 118" 02 = Chassis Forward Control 140"	EX8 = Engine-2.7L I5 Mercedes Turbo Diesel	DGJ = Transmission-5-Spd. Automatic,W5A580

Turbo Charger Heat Shield
Figure 14-635

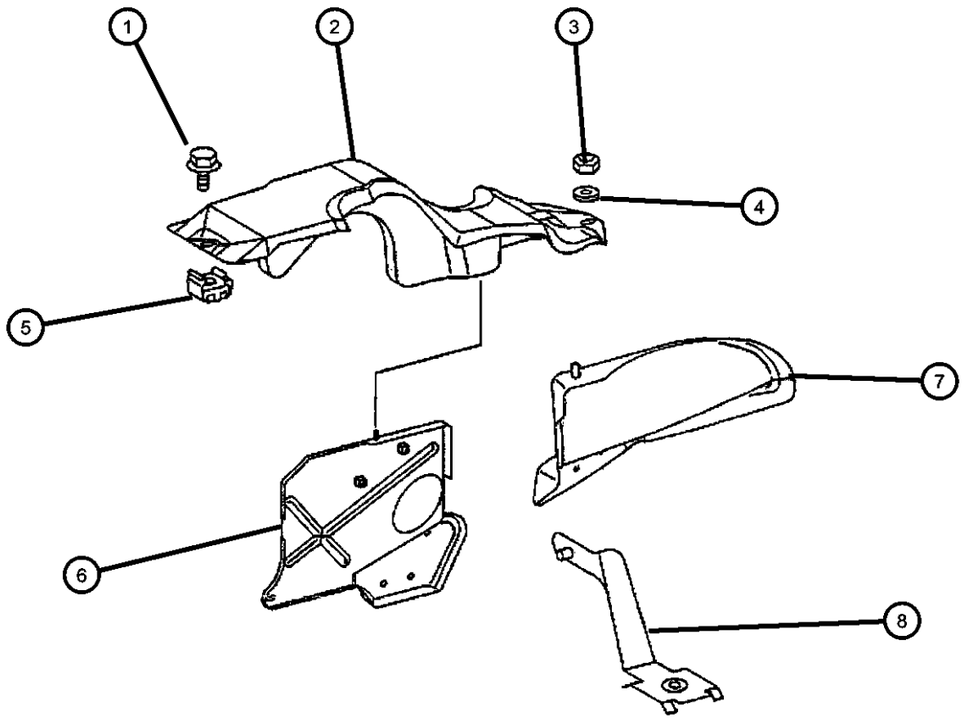

ITEM	PART NUMBER	QTY	LINE	SERIES	BODY	ENGINE	TRANS	TRIM	DESCRIPTION
Sales Codes:EX9=ENGINE-2.7L I5 MERCEDES TURBO DGJ=TRANSMISSION - 5-SPD AUTO									
1									BOLT
	06104179AA	1	2, 6	L	11, 12, 14, 15, 16				
		1	2, 6	L	51, 52, 54, 55, 56				
		1	3, 7	L	12, 15, 16				
2									COVER, Turbo Charger Compressor
	05104138AA	1	2, 6	L	11, 12, 14, 15, 16				
		1	2, 6	L	51, 52, 54, 55, 56				
		1	3, 7	L	12, 15, 16				
3									NUT, Hex
	05097674AA	1	2, 6	L	11, 12, 14, 15, 16	EX9			
		1	2, 6	L	51, 52, 54, 55, 56	EX9			
		1	3, 7	L	12, 15, 16	EX9			
4									WASHER
	05133908AA	1	2, 6	L	11, 12, 14, 15, 16				
		1	2, 6	L	51, 52, 54, 55, 56				
		1	3, 7	L	12, 15, 16				
5									NUT
	05126253AA	1	2, 6	L	11, 12, 14, 15, 16				
		1	2, 6	L	51, 52, 54, 55, 56				
		1	3, 7	L	12, 15, 16				
6									COVER, Air Inlet
	05120028AA	1	2, 6	L	11, 12, 14, 15, 16				

SPRINTER (VA)

SERIES	LINE	BODY	ENGINE	TRANSMISSION
L = LOWLINE	3 = HD DODGE 2WD 6 = Lt. Duty DODGE 4WD 2 = Med. Duty DODGE 2WD 7 = Med. Duty DODGE 4WD	55 = Wagon 140" 54 = Wagon 118" 52 = Wagon 140" 51 = Wagon 118" 12 = Van 140" 11 = Van 118" 06 = Front Section 158" 14 = Van 118" 15 = Van 140" 16 = Van 158" 56 = Wagon 158" 01 = Chassis Forward Control 118" 02 = Chassis Forward Control 140"	EX8 = Engine-2.7L I5 Mercedes Turbo Diesel	DGJ = Transmission-5-Spd. Automatic,W5A580

Turbo Charger Heat Shield
Figure 14-635

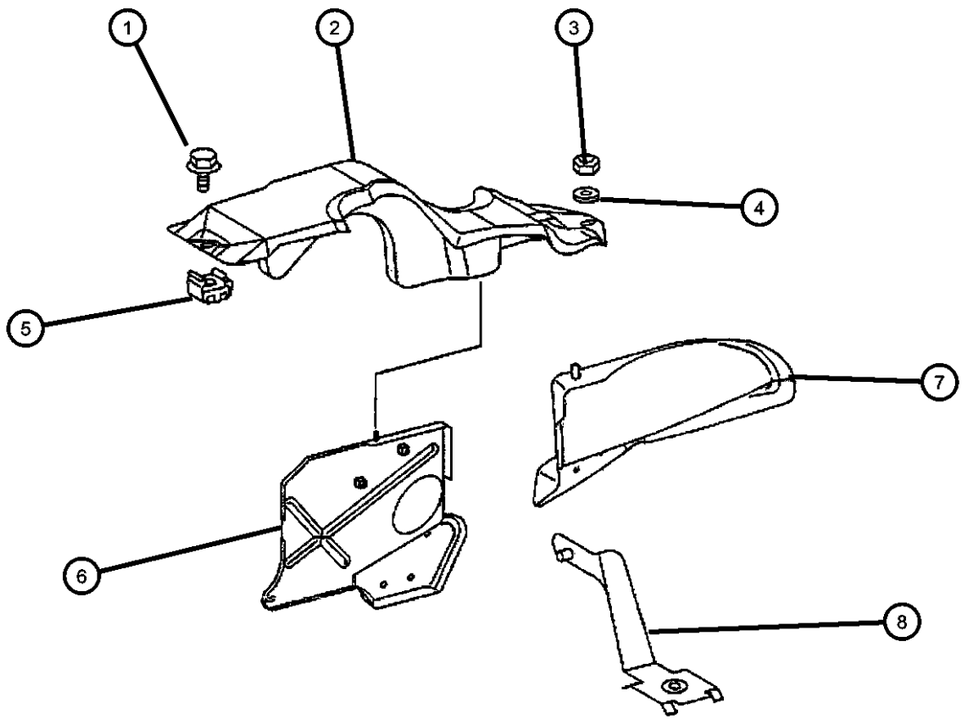

ITEM	PART NUMBER	QTY	LINE	SERIES	BODY	ENGINE	TRANS	TRIM	DESCRIPTION
		1	2, 6	L	51, 52, 54, 55, 56				
		1	3, 7	L	12, 15, 16				
7									COVER, Air Inlet
	05120025AA	1	2, 6	L	11, 12, 14, 15, 16				
		1	2, 6	L	51, 52, 54, 55, 56				
		1	3, 7	L	12, 15, 16				
8									BRACKET, Air Inlet
	05120059AA	1	3, 7	L	12, 15, 16				
		1	2, 6	L	11, 12, 14, 15, 16				
		1	2, 6	L	51, 52, 54, 55, 56				

SPRINTER (VA)

SERIES	LINE	BODY	ENGINE	TRANSMISSION
L = LOWLINE	3 = HD DODGE 2WD 6 = Lt. Duty DODGE 4WD 2 = Med. Duty DODGE 2WD 7 = Med. Duty DODGE 4WD	55 = Wagon 140" 54 = Wagon 118" 52 = Wagon 140" 51 = Wagon 118" 12 = Van 140" 11 = Van 118" 06 = Front Section 158" 14 = Van 118" 15 = Van 140" 16 = Van 158" 56 = Wagon 158" 01 = Chassis Forward Control 118" 02 = Chassis Forward Control 140"	EX8 = Engine-2.7L I5 Mercedes Turbo Diesel	DGJ = Transmission-5-Spd. Automatic,W5A580

Air Cleaner
Figure 14-810

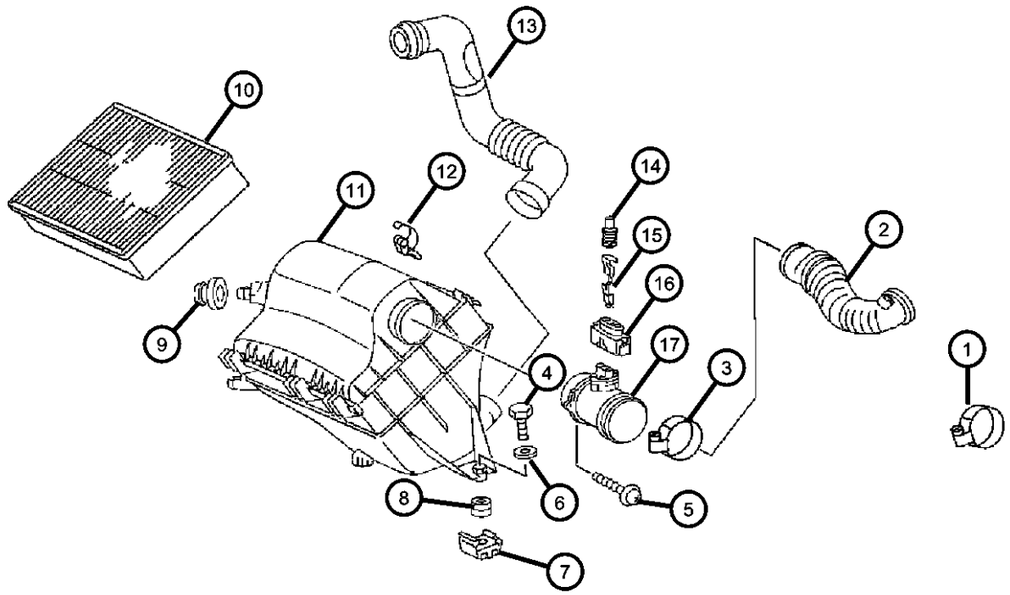

ITEM	PART NUMBER	QTY	LINE	SERIES	BODY	ENGINE	TRANS	TRIM	DESCRIPTION
1									CLAMP
	06104787AA	1	2, 6	L	01, 02, 06				
		1	2, 6	L	11, 12, 14, 15, 16				
		1	2, 6	L	51, 52, 54, 55, 56				
		1	3, 7	L	02, 06				
		1	3, 7	L	12, 15, 16				
2									HOSE, Air Cleaner to T/Body
	05104140AA	1	2, 6	L	11, 12, 14, 15, 16				
		1	2, 6	L	51, 52, 54, 55, 56				
		1	3, 7	L	12, 15, 16				
3									CLAMP
	06104790AA	1	2, 6	L	01, 02, 06	EX8			
		1	2, 6	L	11, 12, 14, 15, 16	EX8			
		1	2, 6	L	51, 52, 54, 55, 56	EX8			
		1	3, 7	L	02, 06	EX8			
		1	3, 7	L	12, 15, 16	EX8			
4									BOLT
	06104124AA	1	2, 6	L	11, 12, 14, 15, 16				
		1	2, 6	L	51, 52, 54, 55, 56				
		1	3, 7	L	12, 15, 16				
		1	2, 6	L	01, 02, 06				
		1	3, 7	L	02, 06				
5									BOLT, Hex Head
	05133748AA	2	2, 6	L	01, 02, 06	EX8			
		2	2, 6	L	11, 12, 14, 15, 16	EX8			

SPRINTER (VA)

SERIES	LINE	BODY	ENGINE	TRANSMISSION
L = LOWLINE	3 = HD DODGE 2WD 6 = Lt. Duty DODGE 4WD 2 = Med. Duty DODGE 2WD 7 = Med. Duty DODGE 4WD	55 = Wagon 140" 54 = Wagon 118" 52 = Wagon 140" 51 = Wagon 118" 12 = Van 140" 11 = Van 118" 06 = Front Section 158" 14 = Van 118" 15 = Van 140" 16 = Van 158" 56 = Wagon 158" 01 = Chassis Forward Control 118" 02 = Chassis Forward Control 140"	EX8 = Engine-2.7L I5 Mercedes Turbo Diesel	DGJ = Transmission-5-Spd. Automatic,W5A580

AR = use ase required - = Non illustrrated part

Air Cleaner
Figure 14-810

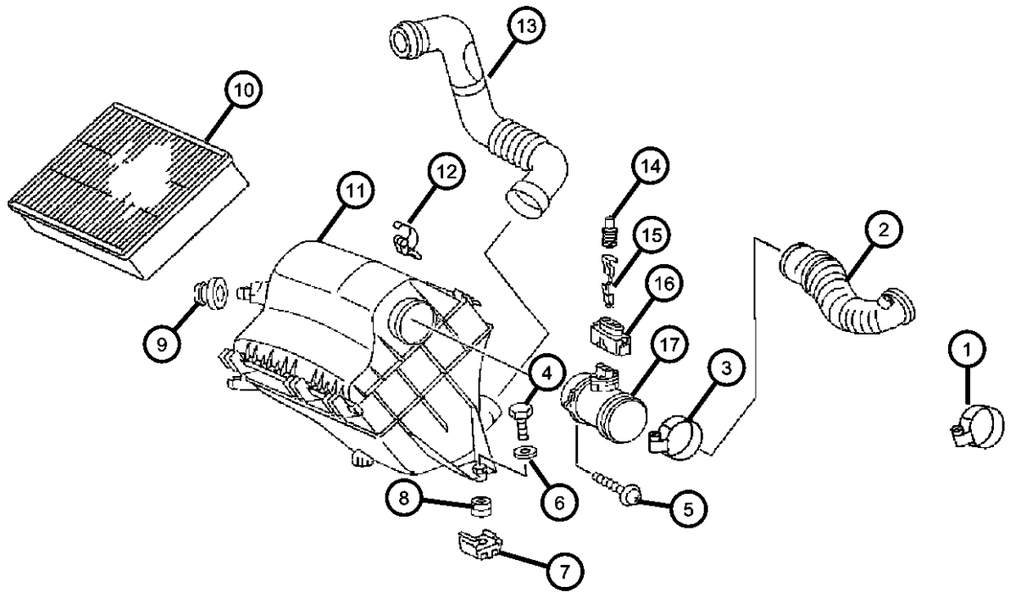

ITEM	PART NUMBER	QTY	LINE	SERIES	BODY	ENGINE	TRANS	TRIM	DESCRIPTION
		2	2, 6	L	51, 52, 54, 55, 56	EX8			
		2	3, 7	L	02, 06	EX8			
		2	3, 7	L	12, 15, 16				
6									WASHER
	05133908AA	1	3, 7	L	12, 15, 16				
		1	2, 6	L	01, 02, 06				
		1	2, 6	L	11, 12, 14, 15, 16				
		1	2, 6	L	51, 52, 54, 55, 56				
7									NUT
	05126236AA	2	3, 7	L	02, 06				
	05126253AA	1	2, 6	L	01, 02, 06				
		1	2, 6	L	11, 12, 14, 15, 16				
		1	2, 6	L	51, 52, 54, 55, 56				
		2	3, 7	L	12, 15, 16		DGJ		
8									BUSHING, Isolator Mounting Leg
	05133742AA	1	2, 6	L	01, 02, 06				
		1	2, 6	L	11, 12, 14, 15, 16				
		1	2, 6	L	51, 52, 54, 55, 56				
		1	3, 7	L	02, 06				
		1	3, 7	L	12, 15, 16				
9									GROMMET, Air Cleaner
	05120012AA	2	2, 6	L	51, 52, 54, 55, 56				
		2	2, 6	L	01, 02, 06				
		2	2, 6	L	11, 12, 14, 15, 16				

SPRINTER (VA)

SERIES	LINE	BODY	ENGINE	TRANSMISSION
L = LOWLINE	3 = HD DODGE 2WD 6 = Lt. Duty DODGE 4WD 2 = Med. Duty DODGE 2WD 7 = Med. Duty DODGE 4WD	55 = Wagon 140" 54 = Wagon 118" 52 = Wagon 140" 51 = Wagon 118" 12 = Van 140" 11 = Van 118" 06 = Front Section 158" 14 = Van 118" 15 = Van 140" 16 = Van 158" 56 = Wagon 158" 01 = Chassis Forward Control 118" 02 = Chassis Forward Control 140"	EX8 = Engine-2.7L I5 Mercedes Turbo Diesel	DGJ = Transmission-5-Spd. Automatic,W5A580

Air Cleaner
Figure 14-810

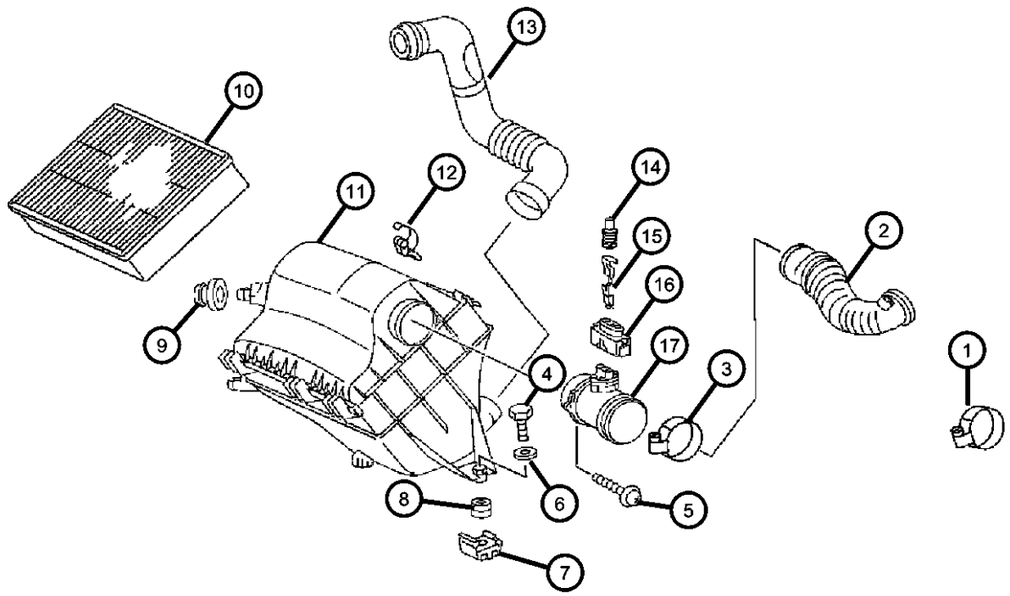

ITEM	PART NUMBER	QTY	LINE	SERIES	BODY	ENGINE	TRANS	TRIM	DESCRIPTION
		2	3, 7	L	12, 15, 16				
10									FILTER, Air
	05103554AA	1	2, 6	L	01, 02, 06	EX8, EX9			
		1	2, 6	L	11, 12, 14, 15, 16	EX8, EX9			
		1	2, 6	L	51, 52, 54, 55, 56	EX8, EX9			
		1	3, 7	L	02, 06	EX8, EX9			
		1	3, 7	L	12, 15, 16	EX8, EX9			
11									AIR CLEANER
	05117478AA	1	2, 6	L	01, 02, 06	EX8	DGJ		
		1	2, 6	L	11, 12, 14, 15, 16	EX8	DGJ		
		1	2, 6	L	51, 52, 54, 55, 56	EX8	DGJ		
		1	3, 7	L	02, 06	EX8	DGJ		
		1	3, 7	L	12, 15, 16	EX8	DGJ		
12									LATCH, Air Cleaner
	05133741AA	1	2, 6	L	01, 02, 06				
		1	2, 6	L	11, 12, 14, 15, 16				
		1	3, 7	L	02, 06				
		1	3, 7	L	12, 15, 16				
		1	2, 6	L	51, 52, 54, 55, 56				
13									HOSE, Air Cleaner
	05103616AA	1	2, 6	L	01, 02, 06				
		1	2, 6	L	11, 12, 14, 15, 16				
		1	2, 6	L	51, 52, 54, 55, 56				
		1	3, 7	L	12, 15, 16				

SPRINTER (VA)

SERIES	LINE	BODY	ENGINE	TRANSMISSION
L = LOWLINE	3 = HD DODGE 2WD 6 = Lt. Duty DODGE 4WD 2 = Med. Duty DODGE 2WD 7 = Med. Duty DODGE 4WD	55 = Wagon 140" 54 = Wagon 118" 52 = Wagon 140" 51 = Wagon 118" 12 = Van 140" 11 = Van 118" 06 = Front Section 158" 14 = Van 118" 15 = Van 140" 16 = Van 158" 56 = Wagon 158" 01 = Chassis Forward Control 118" 02 = Chassis Forward Control 140"	EX8 = Engine-2.7L I5 Mercedes Turbo Diesel	DGJ = Transmission-5-Spd. Automatic,W5A580

Air Cleaner
Figure 14-810

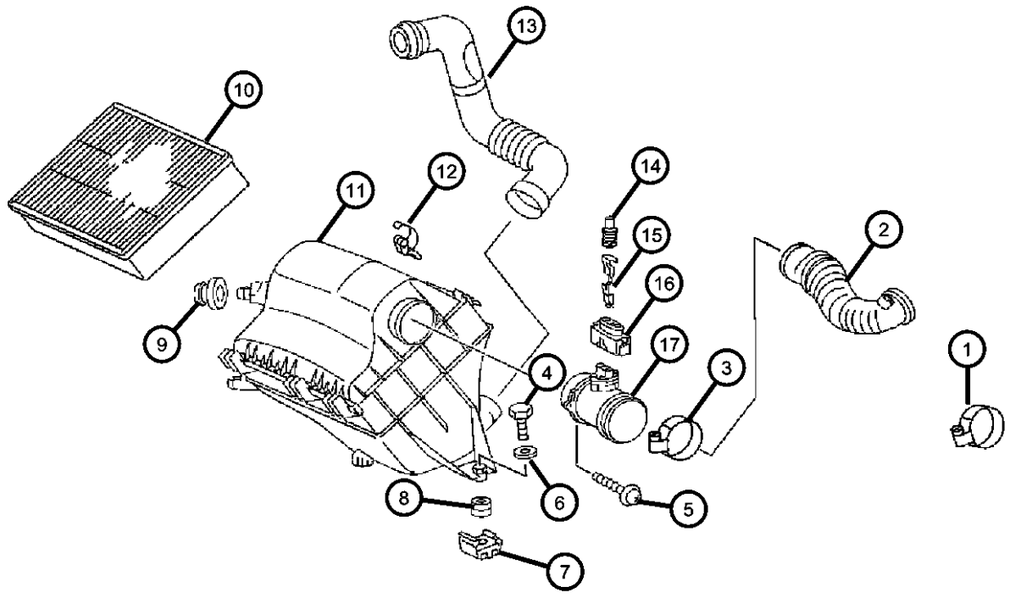

ITEM	PART NUMBER	QTY	LINE	SERIES	BODY	ENGINE	TRANS	TRIM	DESCRIPTION
	05120144AA	1	3, 7	L	02, 06	EX8			
14									GASKET
	05103661AA	1	2, 6	L	01, 02, 06				
		1	2, 6	L	11, 12, 14, 15, 16				
		1	2, 6	L	51, 52, 54, 55, 56				
		99	3, 7	L	02, 06				
		1	3, 7	L	12, 15, 16				
15									TERMINAL
	05102935AA	99	2, 6	L	01, 02, 06				
		1	2, 6	L	11, 12, 14, 15, 16				
		1	2, 6	L	51, 52, 54, 55, 56				
		99	3, 7	L	02, 06				
		1	3, 7	L	12, 15, 16				
16									PLUG
	05120763AA	1	2, 6	L	01, 02, 06				
		1	2, 6	L	11, 12, 14, 15, 16				
		1	2, 6	L	51, 52, 54, 55, 56				
		1	3, 7	L	02, 06				
		1	3, 7	L	12, 15, 16				
17									SENSOR, Mass Airflow
	05117501AA	1	2, 6	L	01, 02, 06	EX8			
		1	2, 6	L	11, 12, 14, 15, 16	EX8			
		1	2, 6	L	51, 52, 54, 55, 56	EX8			
		1	3, 7	L	02, 06	EX8			

SPRINTER (VA)

SERIES	LINE	BODY	ENGINE	TRANSMISSION
L = LOWLINE	3 = HD DODGE 2WD 6 = Lt. Duty DODGE 4WD 2 = Med. Duty DODGE 2WD 7 = Med. Duty DODGE 4WD	55 = Wagon 140" 54 = Wagon 118" 52 = Wagon 140" 51 = Wagon 118" 12 = Van 140" 11 = Van 118" 06 = Front Section 158" 14 = Van 118" 15 = Van 140" 16 = Van 158" 56 = Wagon 158" 01 = Chassis Forward Control 118" 02 = Chassis Forward Control 140"	EX8 = Engine-2.7L I5 Mercedes Turbo Diesel	DGJ = Transmission-5-Spd. Automatic,W5A580

AR = use ase required - = Non illustrrated part

Air Cleaner
Figure 14-810

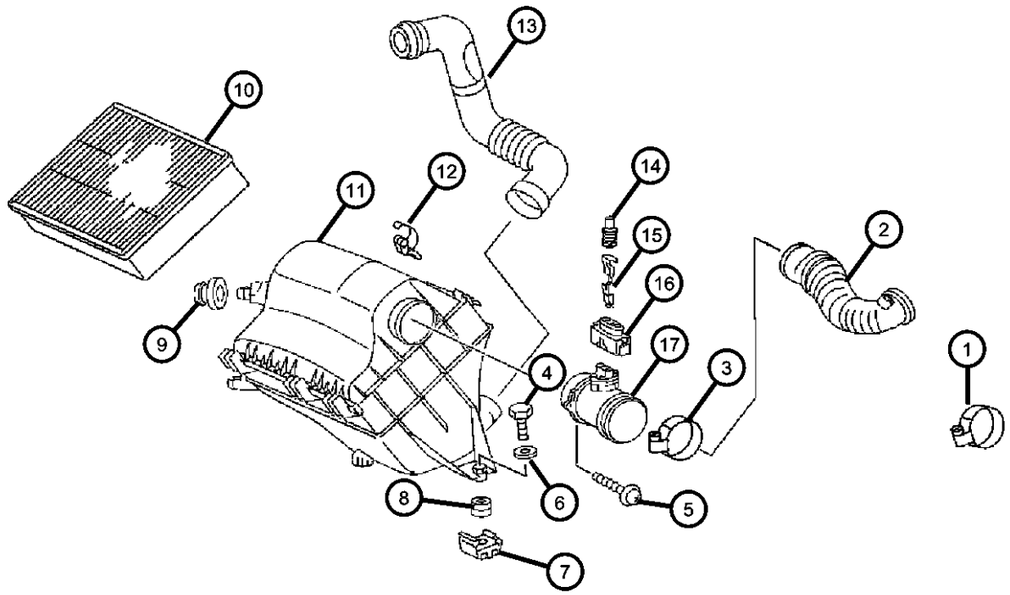

ITEM	PART NUMBER	QTY	LINE	SERIES	BODY	ENGINE	TRANS	TRIM	DESCRIPTION
		1	3, 7	L	12, 15, 16	EX8			
-18									SEAL, O-Ring
	05133740AA	1	2, 6	L	01, 02, 06				Air Flow Meter To Air Hose Seal
		1	2, 6	L	11, 12, 14, 15, 16				Air Flow Meter To Air Hose Seal
		1	2, 6	L	51, 52, 54, 55, 56				Air Flow Meter To Air Hose Seal
		1	3, 7	L	02, 06				Air Flow Meter To Air Hose Seal
		1	3, 7	L	12, 15, 16				Air Flow Meter To Air Hose Seal
-19									BRACKET, Air Inlet
	05120059AA	1	2, 6	L	01, 02, 06				
		1	2, 6	L	11, 12, 14, 15, 16				
		1	2, 6	L	51, 52, 54, 55, 56				
		1	3, 7	L	02, 06				
		1	3, 7	L	12, 15, 16				

SPRINTER (VA)

SERIES	LINE	BODY	ENGINE	TRANSMISSION
L = LOWLINE	3 = HD DODGE 2WD 6 = Lt. Duty DODGE 4WD 2 = Med. Duty DODGE 2WD 7 = Med. Duty DODGE 4WD	55 = Wagon 140" 54 = Wagon 118" 52 = Wagon 140" 51 = Wagon 118" 12 = Van 140" 11 = Van 118" 06 = Front Section 158" 14 = Van 118" 15 = Van 140" 16 = Van 158" 56 = Wagon 158" 01 = Chassis Forward Control 118" 02 = Chassis Forward Control 140"	EX8 = Engine-2.7L I5 Mercedes Turbo Diesel	DGJ = Transmission-5-Spd. Automatic,W5A580

AR = use ase required - = Non illustrrated part

Accelerator Pedal
Figure 14-1110

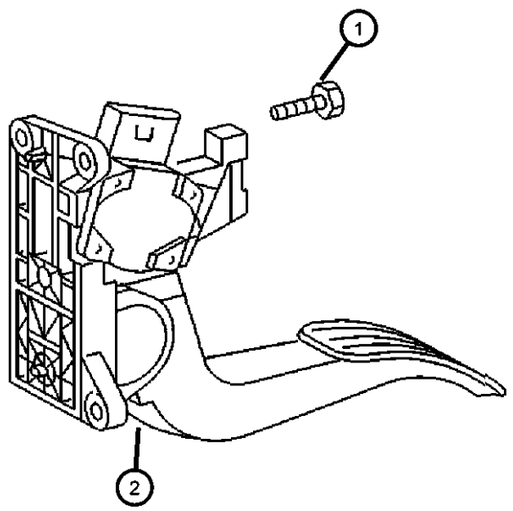

ITEM	PART NUMBER	QTY	LINE	SERIES	BODY	ENGINE	TRANS	TRIM	DESCRIPTION
Sales Codes:[EX8]= 2.7L I5 MERCEDES-BENZ DGJ=TRANSMISSION - 5-SPD AUTO									
1	06104005AA	2		L					SCREW
2									PEDAL, Accelerator
	05135510AA	1	2, 6	L	01, 02, 06	EX8			
		1	2, 6	L	11, 12, 14, 15, 16	EX8			
		1	2, 6	L	51, 52, 54, 55, 56	EX8			
		1	3, 7	L	02, 06	EX8			
		1	3, 7	L	12, 15, 16	EX8			

SPRINTER (VA)

SERIES	LINE	BODY	ENGINE	TRANSMISSION
L = LOWLINE	3 = HD DODGE 2WD 6 = Lt. Duty DODGE 4WD 2 = Med. Duty DODGE 2WD 7 = Med. Duty DODGE 4WD	55 = Wagon 140" 54 = Wagon 118" 52 = Wagon 140" 51 = Wagon 118" 12 = Van 140" 11 = Van 118" 06 = Front Section 158" 14 = Van 118" 15 = Van 140" 16 = Van 158" 56 = Wagon 158" 01 = Chassis Forward Control 118" 02 = Chassis Forward Control 140"	EX8 = Engine-2.7L I5 Mercedes Turbo Diesel	DGJ = Transmission-5-Spd. Automatic,W5A580

Group - 16

Propeller Shafts and U-Joints

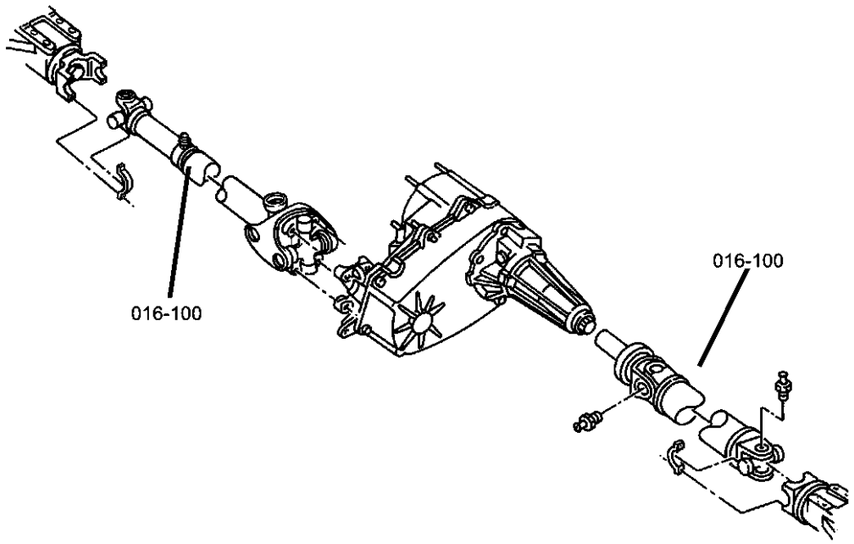

016-100 Propeller Shaft 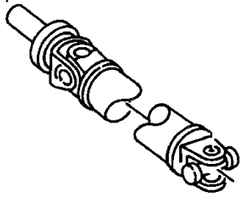			

Group - 16 Propeller Shafts and U-Joints

Illustration Title — Group-Fig. No.

Propeller Shaft

Shaft,Propeller,Rear,2 Piece ..... Fig. 16 - 120
Shaft,Propeller,Rear,3 Piece ..... Fig. 16 - 130

Shaft,Propeller,Rear,2 Piece
Figure 16-120

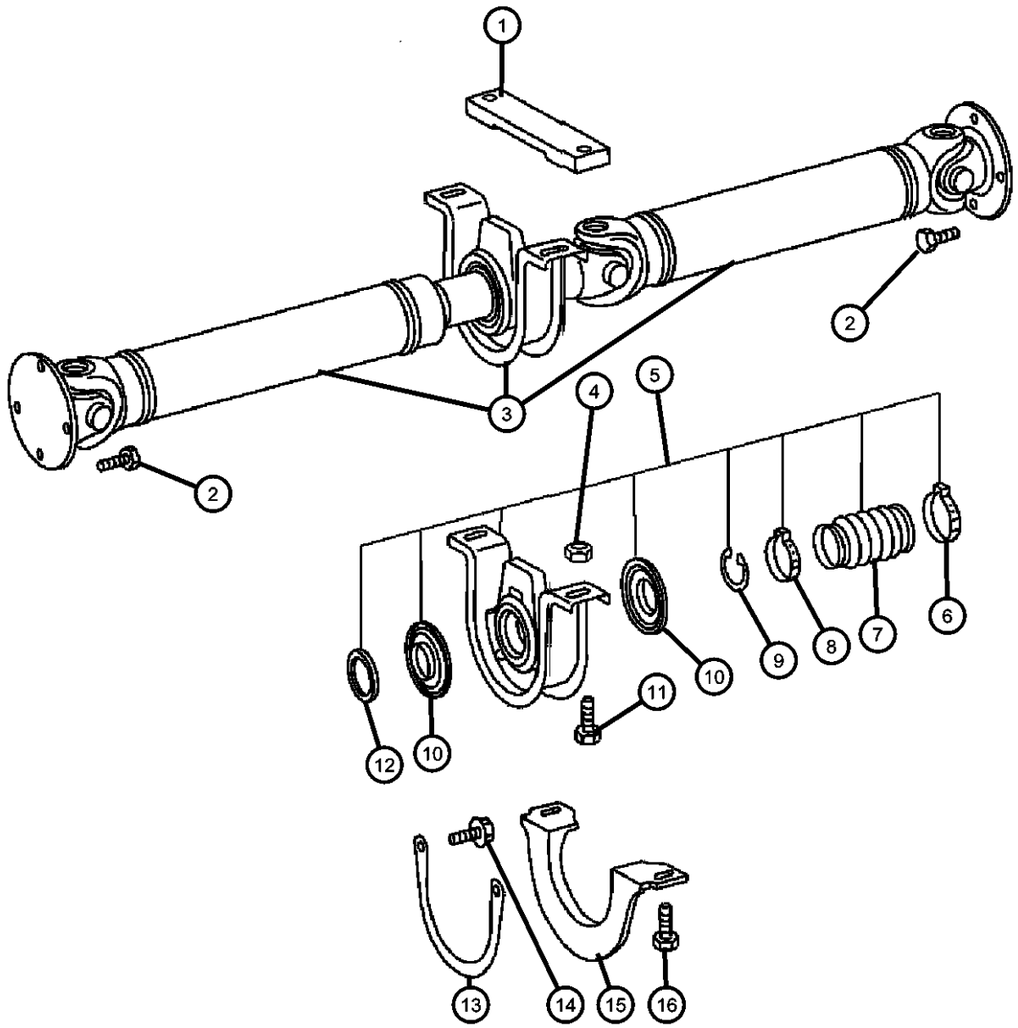

ITEM	PART NUMBER	QTY	LINE	SERIES	BODY	ENGINE	TRANS	TRIM	DESCRIPTION
Note:Sales Codes; [5AC]=118 Inch Wheelbase [5AE]=140 Inch Wheelbase [5AF]=158 Inch Wheelbase									
1	05129044AA	2		L			DGJ		SHIM, Drive Shaft Bearing
2									BOLT
	05103939AA	8	2, 6	L	11, 12, 14, 15				
		12	2, 6	L	16				
		8	2, 6	L	51, 52, 54, 55				
		12	2, 6	L	56				
		8	2, 6	L	01, 02				
		12	2, 6	L	06				
		8	3, 7	L	12, 15				
		12	3, 7	L	16				
3									SHAFT, Drive, 2 Piece
	05119086AA	1	2, 6	L	11, 12, 14, 15, 16	EX9	DGJ		[5AE]
		1	2, 6	L	51, 52, 54, 55, 56	EX9	DGJ		[5AE]
		1	3, 7	L	02, 06	EX9	DGJ		[5AE]
		1	3, 7	L	12, 15, 16	EX9	DGJ		[5AE]
		1	2, 6	L	01, 02, 06	EX9	DGJ		[5AE]
	05129034AA	1	2, 6	L	11, 12, 14, 15, 16	EX9	DGJ		[5AC]
		1	2, 6	L	51, 52, 54, 55, 56	EX9	DGJ		[5AC]
		1	2, 6	L	01, 02, 06	EX9	DGJ		[5AC]
4									NUT
	06104718AA	2	2, 6	L	01, 02, 06				
		2	2, 6	L	11, 12, 14, 15, 16				

SPRINTER (VA)

SERIES	LINE	BODY	ENGINE	TRANSMISSION
L = LOWLINE	3 = HD DODGE 2WD 6 = Lt. Duty DODGE 4WD 2 = Med. Duty DODGE 2WD 7 = Med. Duty DODGE 4WD	55 = Wagon 140" 54 = Wagon 118" 52 = Wagon 140" 51 = Wagon 118" 12 = Van 140" 11 = Van 118" 06 = Front Section 158" 14 = Van 118" 15 = Van 140" 16 = Van 158" 56 = Wagon 158" 01 = Chassis Forward Control 118" 02 = Chassis Forward Control 140"	EX8 = Engine-2.7L I5 Mercedes Turbo Diesel	DGJ = Transmission-5-Spd. Automatic,W5A580

Shaft,Propeller,Rear,2 Piece
Figure 16-120

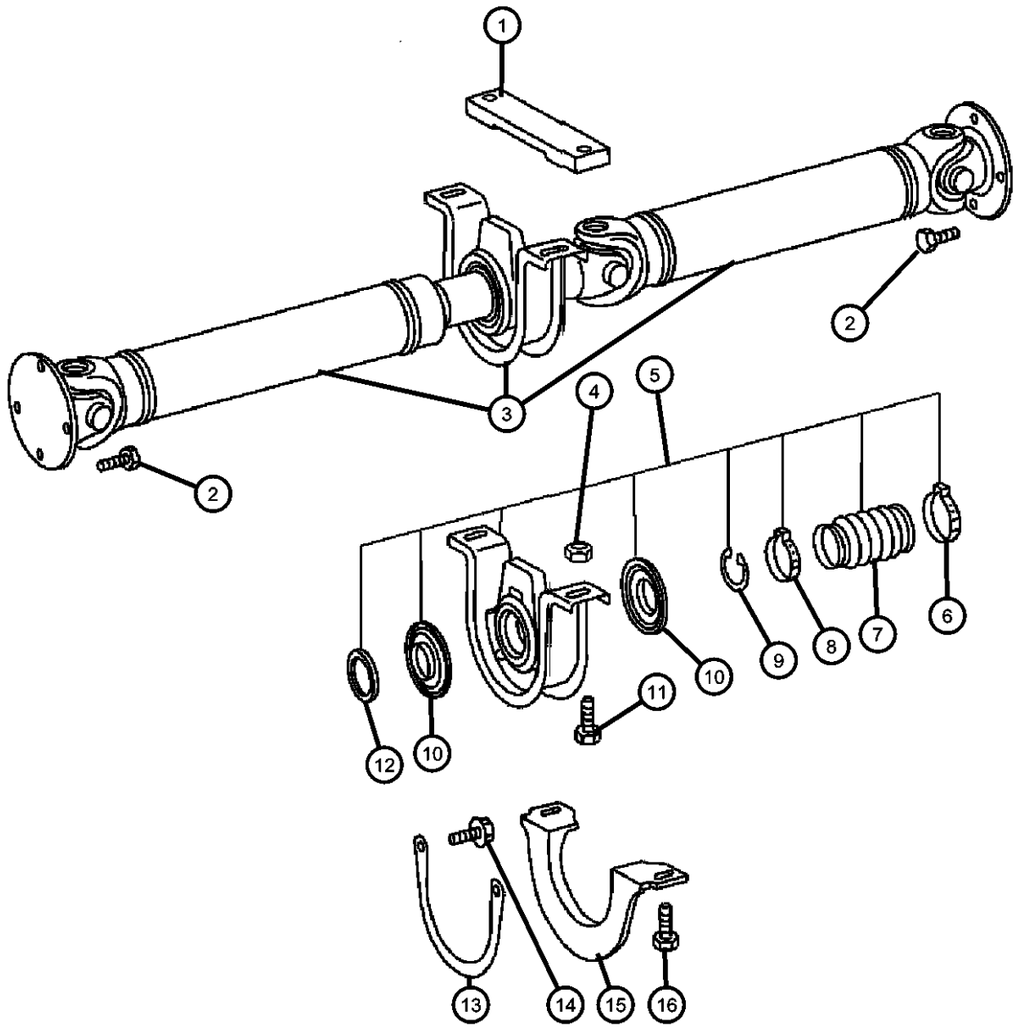

ITEM	PART NUMBER	QTY	LINE	SERIES	BODY	ENGINE	TRANS	TRIM	DESCRIPTION
		2	2, 6	L	51, 52, 54, 55, 56				
		2	3, 7	L	12, 15, 16				
5									CENTER BEARING, Drive Shaft
	05104574AA	1	2, 6	L	01, 02, 06				
		1	2, 6	L	11, 12, 14, 15, 16				
		1	2, 6	L	51, 52, 54, 55, 56				
		1	3, 7	L	12, 15, 16				
6									CLAMP, Boot
	05133900AA	1	2, 6	L	01, 02, 06				
		1	2, 6	L	11, 12, 14, 15, 16				
		1	2, 6	L	51, 52, 54, 55, 56				
		1	3, 7	L	12, 15, 16				
7									BOOT, Driveshaft
	05133897AA	1	2, 6	L	01, 02, 06				
		1	2, 6	L	11, 12, 14, 15, 16				
		1	2, 6	L	51, 52, 54, 55, 56				
		1	3, 7	L	12, 15, 16				
8									CLAMP, Boot
	05133899AA	1	2, 6	L	01, 02, 06				
		1	2, 6	L	11, 12, 14, 15, 16				
		1	2, 6	L	51, 52, 54, 55, 56				
		1	3, 7	L	12, 15, 16				
9		1							SNAP RING, Purchase Item 5, (NOT SERVICED)

SPRINTER (VA)

SERIES	LINE	BODY	ENGINE	TRANSMISSION
L = LOWLINE	3 = HD DODGE 2WD 6 = Lt. Duty DODGE 4WD 2 = Med. Duty DODGE 2WD 7 = Med. Duty DODGE 4WD	55 = Wagon 140" 54 = Wagon 118" 52 = Wagon 140" 51 = Wagon 118" 12 = Van 140" 11 = Van 118" 06 = Front Section 158" 14 = Van 118" 15 = Van 140" 16 = Van 158" 56 = Wagon 158" 01 = Chassis Forward Control 118" 02 = Chassis Forward Control 140"	EX8 = Engine-2.7L I5 Mercedes Turbo Diesel	DGJ = Transmission-5-Spd. Automatic,W5A580

Shaft,Propeller,Rear,2 Piece
Figure 16-120

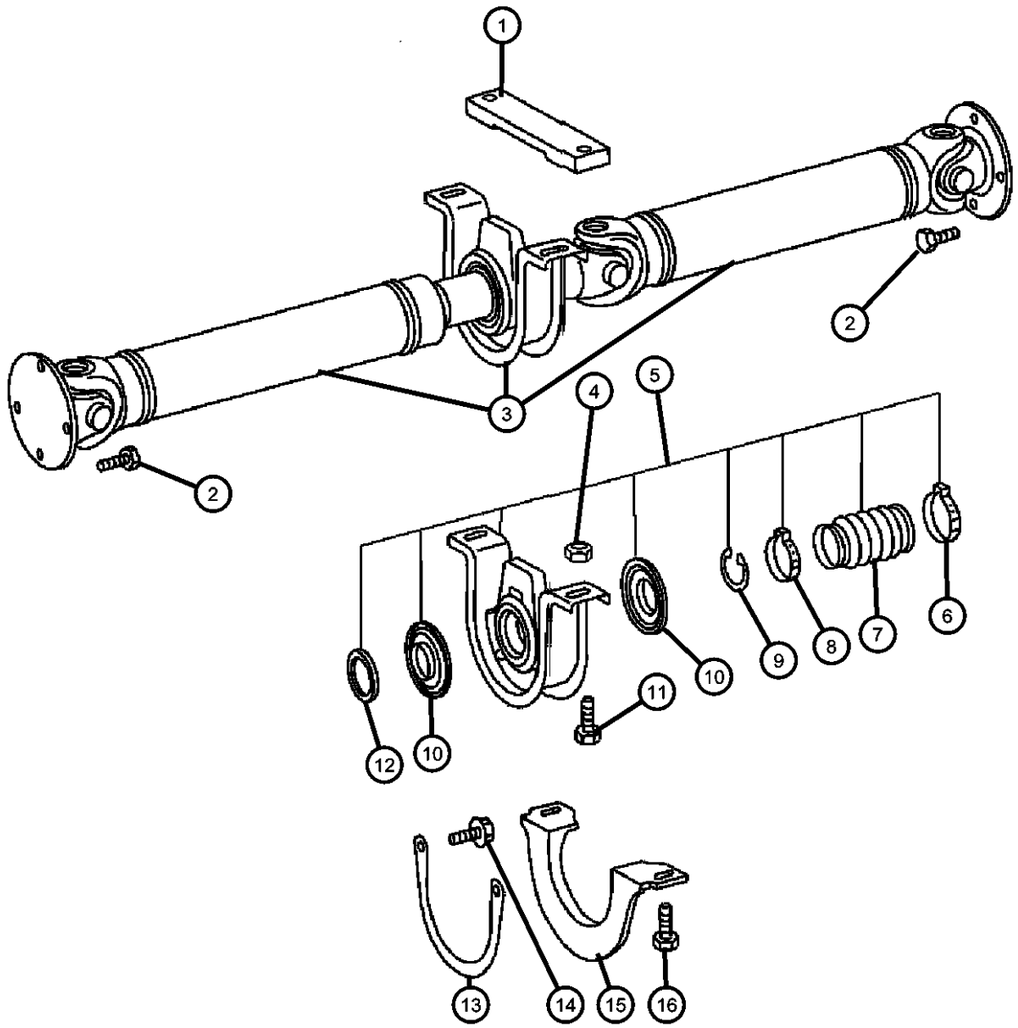

ITEM	PART NUMBER	QTY	LINE	SERIES	BODY	ENGINE	TRANS	TRIM	DESCRIPTION
10									BOOT, Driveshaft
	05133897AA	1	2, 6	L	01, 02, 06				
	05133898AA	1	2, 6	L	11, 12, 14, 15, 16				
		1	2, 6	L	51, 52, 54, 55, 56				
		1	3, 7	L	12, 15, 16				
11									BOLT
	06104229AA	1	3, 7	L	12, 15, 16				
	06104238AA	4	2, 6	L	11, 12, 14, 15, 16				
		4	2, 6	L	01, 02, 06				
		4	2, 6	L	51, 52, 54, 55, 56				
12		4							THRUST WASHER, Purchase Item 5, (NOT SERVICED)
13	05119131AA	1	2, 3, 6, 7	L			DGJ		STRAP, Prop Shaft
14	06104234AA	2		L			DGJ		SCREW
15	05119133AA	2		L					BRACKET, Prop Shaft
16									BOLT, Hex
	05133896AA	2	2, 6	L	16				Without [5AF]
		4	2, 6	L	16				With [5AF]
		2	2, 6	L	06				Without [5AF]
		4	2, 6	L	06				With [5AF]
		4	2, 6	L	56				With [5AF]
		2	3, 7	L	06				Without [5AF]
		2	2, 6	L	56				Without [5AF]
		4	3, 7	L	06				With [5AF]
		2	3, 7	L	16				Without [5AF]
		4	3, 7	L	16				With [5AF]

SPRINTER (VA)

SERIES	LINE	BODY	ENGINE	TRANSMISSION
L = LOWLINE	3 = HD DODGE 2WD 6 = Lt. Duty DODGE 4WD 2 = Med. Duty DODGE 2WD 7 = Med. Duty DODGE 4WD	55 = Wagon 140" 54 = Wagon 118" 52 = Wagon 140" 51 = Wagon 118" 12 = Van 140" 11 = Van 118" 06 = Front Section 158" 14 = Van 118" 15 = Van 140" 16 = Van 158" 56 = Wagon 158" 01 = Chassis Forward Control 118" 02 = Chassis Forward Control 140"	EX8 = Engine-2.7L I5 Mercedes Turbo Diesel	DGJ = Transmission-5-Spd. Automatic,W5A580

Shaft,Propeller,Rear,3 Piece
Figure 16-130

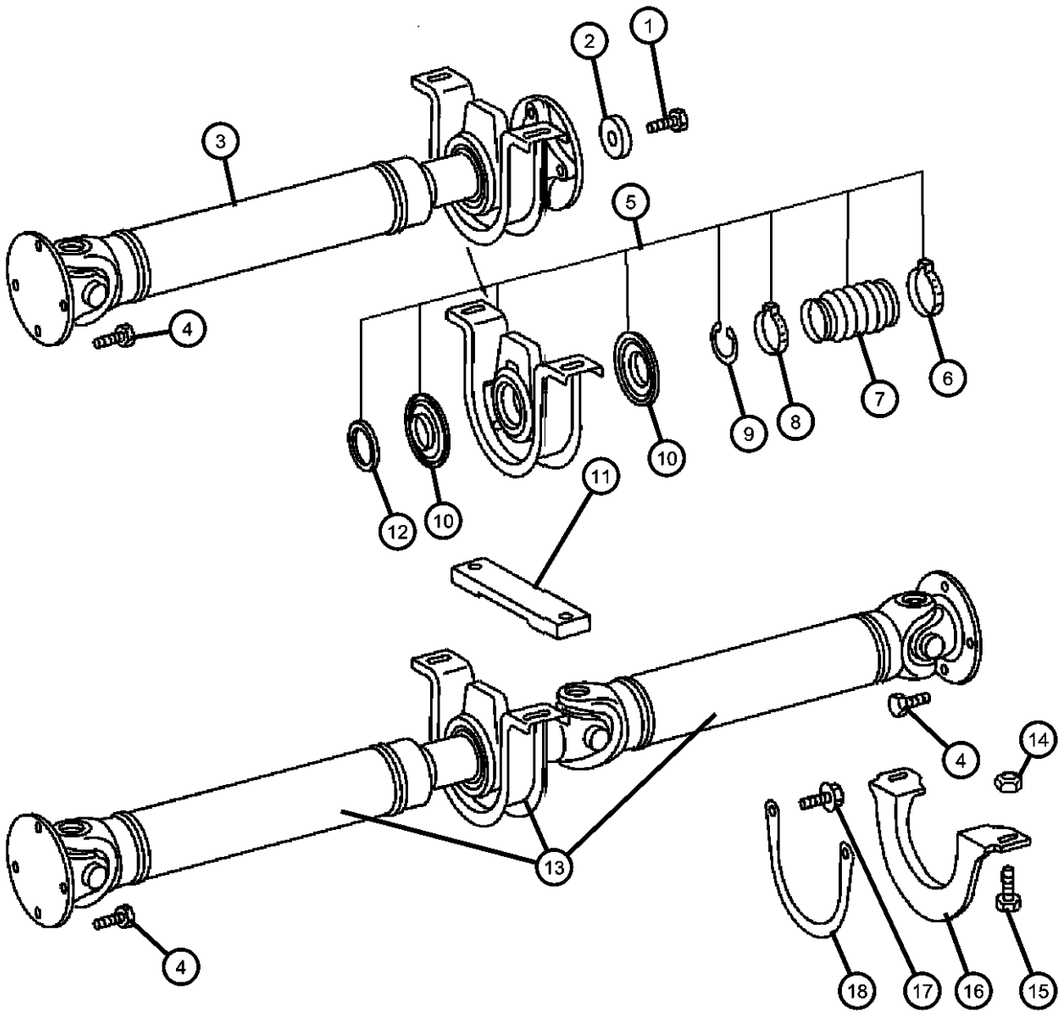

ITEM	PART NUMBER	QTY	LINE	SERIES	BODY	ENGINE	TRANS	TRIM	DESCRIPTION
1		4							BOLT, Drive Shaft, (NOT SERVICED),
2									WASHER, Thrust
	05133894AA	1	2, 6	L	51, 52, 54, 55, 56				
		1	2, 6	L	01, 02, 06				
		1	2, 6	L	11, 12, 14, 15, 16				
		1	3, 7	L	12, 15, 16				
3									SHAFT, Drive, Rear, Front section
	05104083AA	1	2, 6	L	01, 02, 06	EX9	DGJ		
		1	2, 6	L	51, 52, 54, 55, 56	EX9	DGJ		
		1	2, 6	L	11, 12, 14, 15, 16	EX9	DGJ		
		1	3, 7	L	12, 15, 16	EX9	DGJ		
		1	3, 7	L	02, 06	EX9	DGJ		
4									BOLT
	05103939AA	12	2, 6	L	06				
		12	2, 6	L	16				
		12	2, 6	L	56				
		12	3, 7	L	16				
5									CENTER BEARING, Drive Shaft
	05104574AA	1	2, 6	L	01, 02, 06				
		1	2, 6	L	11, 12, 14, 15, 16				
		1	2, 6	L	51, 52, 54, 55, 56				
		1	3, 7	L	12, 15, 16				
6									CLAMP, Boot
	05133900AA	1	2, 6	L	11, 12, 14, 15, 16				
		1	2, 6	L	51, 52, 54, 55, 56				

SPRINTER (VA)

SERIES	LINE	BODY	ENGINE	TRANSMISSION
L = LOWLINE	3 = HD DODGE 2WD 6 = Lt. Duty DODGE 4WD 2 = Med. Duty DODGE 2WD 7 = Med. Duty DODGE 4WD	55 = Wagon 140" 54 = Wagon 118" 52 = Wagon 140" 51 = Wagon 118" 12 = Van 140" 11 = Van 118" 06 = Front Section 158" 14 = Van 118" 15 = Van 140" 16 = Van 158" 56 = Wagon 158" 01 = Chassis Forward Control 118" 02 = Chassis Forward Control 140"	EX8 = Engine-2.7L I5 Mercedes Turbo Diesel	DGJ = Transmission-5-Spd. Automatic,W5A580

Shaft,Propeller,Rear,3 Piece
Figure 16-130

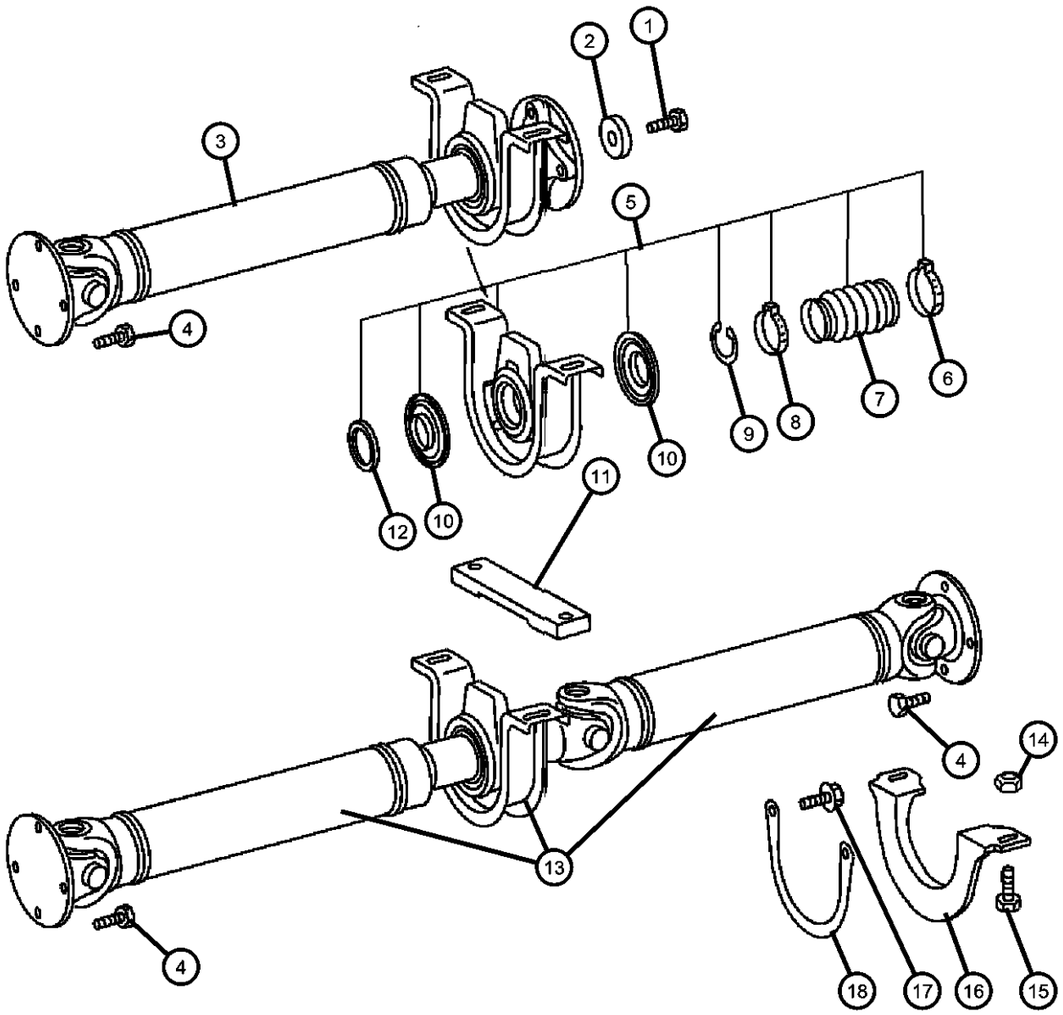

ITEM	PART NUMBER	QTY	LINE	SERIES	BODY	ENGINE	TRANS	TRIM	DESCRIPTION
		1	3, 7	L	12, 15, 16				
		1	2, 6	L	01, 02, 06				
7									BOOT, Driveshaft
	05133897AA	1	2, 6	L	01, 02, 06				
		1	2, 6	L	51, 52, 54, 55, 56				
		1	3, 7	L	12, 15, 16				
		1	2, 6	L	11, 12, 14, 15, 16				
8									CLAMP, Boot
	05133899AA	1	2, 6	L	01, 02, 06				
		1	2, 6	L	11, 12, 14, 15, 16				
		1	2, 6	L	51, 52, 54, 55, 56				
		1	3, 7	L	12, 15, 16				
9		1							SNAP RING, Purchase Item 5, (NOT SERVICED)
10									BOOT, Driveshaft
	05133898AA	1	2, 6	L	01, 02, 06				
		1	2, 6	L	11, 12, 14, 15, 16				
		1	2, 6	L	51, 52, 54, 55, 56				
		1	3, 7	L	12, 15, 16				
11	05129044AA	2		L			DGJ		SHIM, Drive Shaft Bearing
12	05129044AA	2							THRUST WASHER, Purchase Item 5, (NOT SERVICED)
13									SHAFT, Drive, Rear, Rear section
	05104084AA	1	2, 6	L	06				
		1	2, 6	L	16				
		1	2, 6	L	56				

SPRINTER (VA)

SERIES	LINE	BODY	ENGINE	TRANSMISSION
L = LOWLINE	3 = HD DODGE 2WD 6 = Lt. Duty DODGE 4WD 2 = Med. Duty DODGE 2WD 7 = Med. Duty DODGE 4WD	55 = Wagon 140" 54 = Wagon 118" 52 = Wagon 140" 51 = Wagon 118" 12 = Van 140" 11 = Van 118" 06 = Front Section 158" 14 = Van 118" 15 = Van 140" 16 = Van 158" 56 = Wagon 158" 01 = Chassis Forward Control 118" 02 = Chassis Forward Control 140"	EX8 = Engine-2.7L I5 Mercedes Turbo Diesel	DGJ = Transmission-5-Spd. Automatic,W5A580

Shaft,Propeller,Rear,3 Piece
Figure 16-130

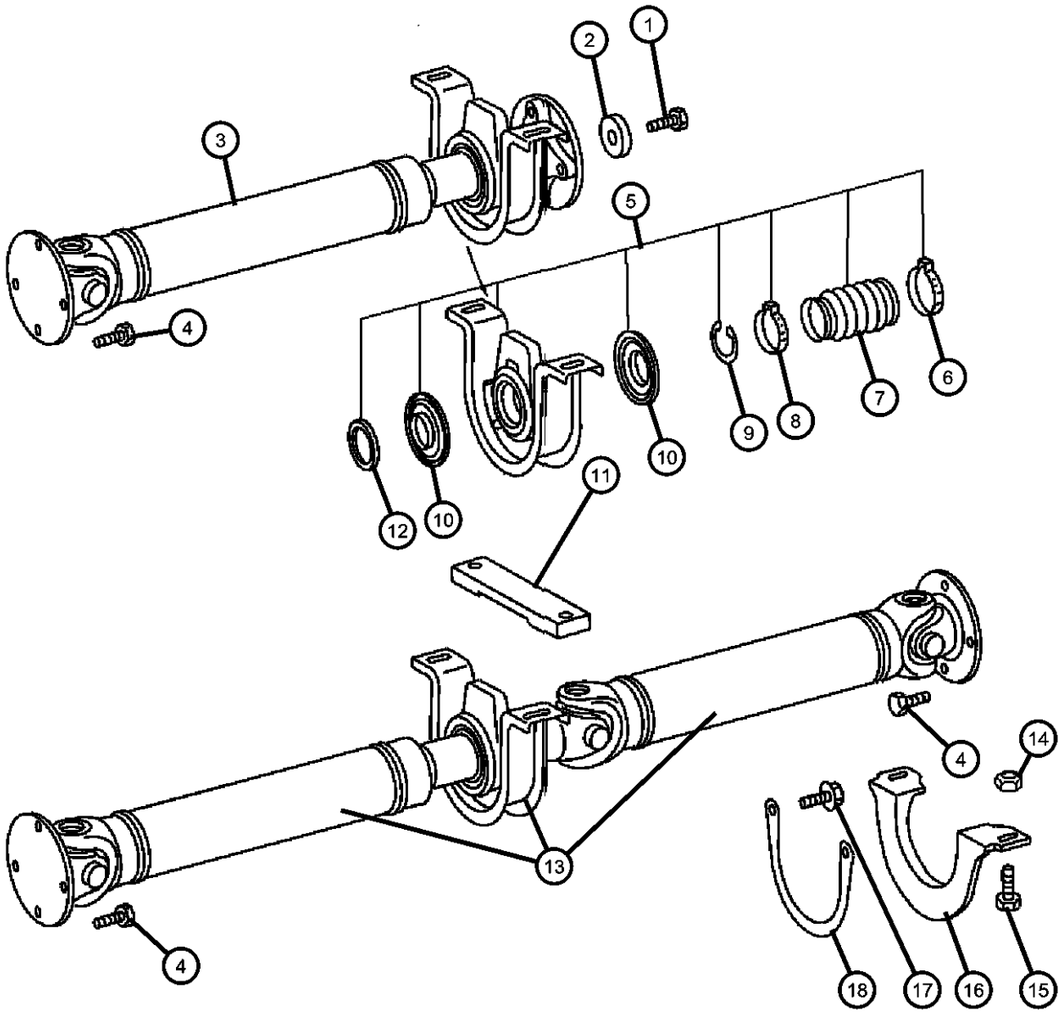

ITEM	PART NUMBER	QTY	LINE	SERIES	BODY	ENGINE	TRANS	TRIM	DESCRIPTION
		1	3, 7	L	16				
14									NUT
	06104718AA	4	2, 6	L	01, 02, 06				
		4	2, 6	L	51, 52, 54, 55, 56				
		4	2, 6	L	11, 12, 14, 15, 16				
		2	3, 7	L	12, 15, 16				
15									BOLT, Hex
	05133896AA	2	2, 6	L	06				Without [5AF]
		4	2, 6	L	06				With [5AF]
		2	2, 6	L	16				Without [5AF]
		4	2, 6	L	16				With [5AF]
		2	2, 6	L	56				Without [5AF]
		4	2, 6	L	56				With [5AF]
		2	3, 7	L	06				Without [5AF]
		4	3, 7	L	06				With [5AF]
		2	3, 7	L	16				Without [5AF]
		4	3, 7	L	16				With [5AF]
16	05119133AA	2		L					BRACKET, Prop Shaft
17	06104234AA	2		L			DGJ		SCREW
18	05119131AA	1	2, 3, 6, 7	L			DGJ		STRAP, Prop Shaft

SPRINTER (VA)

SERIES	LINE	BODY	ENGINE	TRANSMISSION
L = LOWLINE	3 = HD DODGE 2WD 6 = Lt. Duty DODGE 4WD 2 = Med. Duty DODGE 2WD 7 = Med. Duty DODGE 4WD	55 = Wagon 140" 54 = Wagon 118" 52 = Wagon 140" 51 = Wagon 118" 12 = Van 140" 11 = Van 118" 06 = Front Section 158" 14 = Van 118" 15 = Van 140" 16 = Van 158" 56 = Wagon 158" 01 = Chassis Forward Control 118" 02 = Chassis Forward Control 140"	EX8 = Engine-2.7L I5 Mercedes Turbo Diesel	DGJ = Transmission-5-Spd. Automatic,W5A580

AR = use ase required - = Non illustrrated part

Group - 17

Rear Suspension

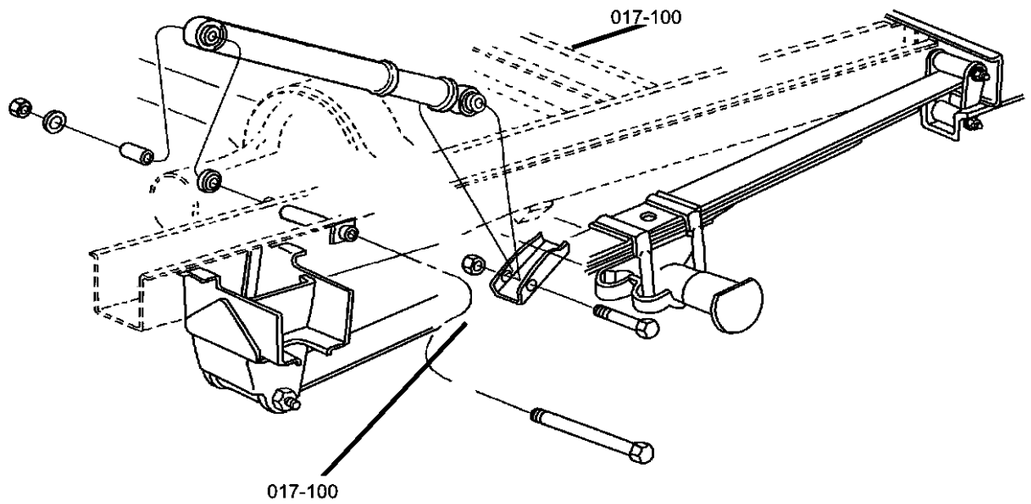

017-100 Rear Suspension 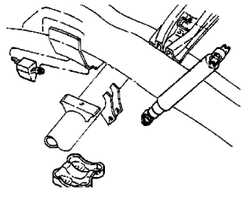	**017-200** Rear Stabilizer 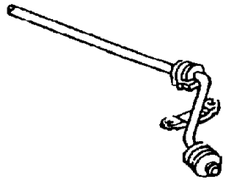		

Group - 17 Rear Suspension

Illustration Title — Group-Fig. No.

Rear Suspension

Rear Shocks ..... Fig. 17 - 110
Rear Springs, 2500 Series ..... Fig. 17 - 120
Rear Springs, 3500 Series ..... Fig. 17 - 130

Rear Stabilizer

Stabilizer Bar,Rear ..... Fig. 17 - 210

Rear Shocks
Figure 17-110

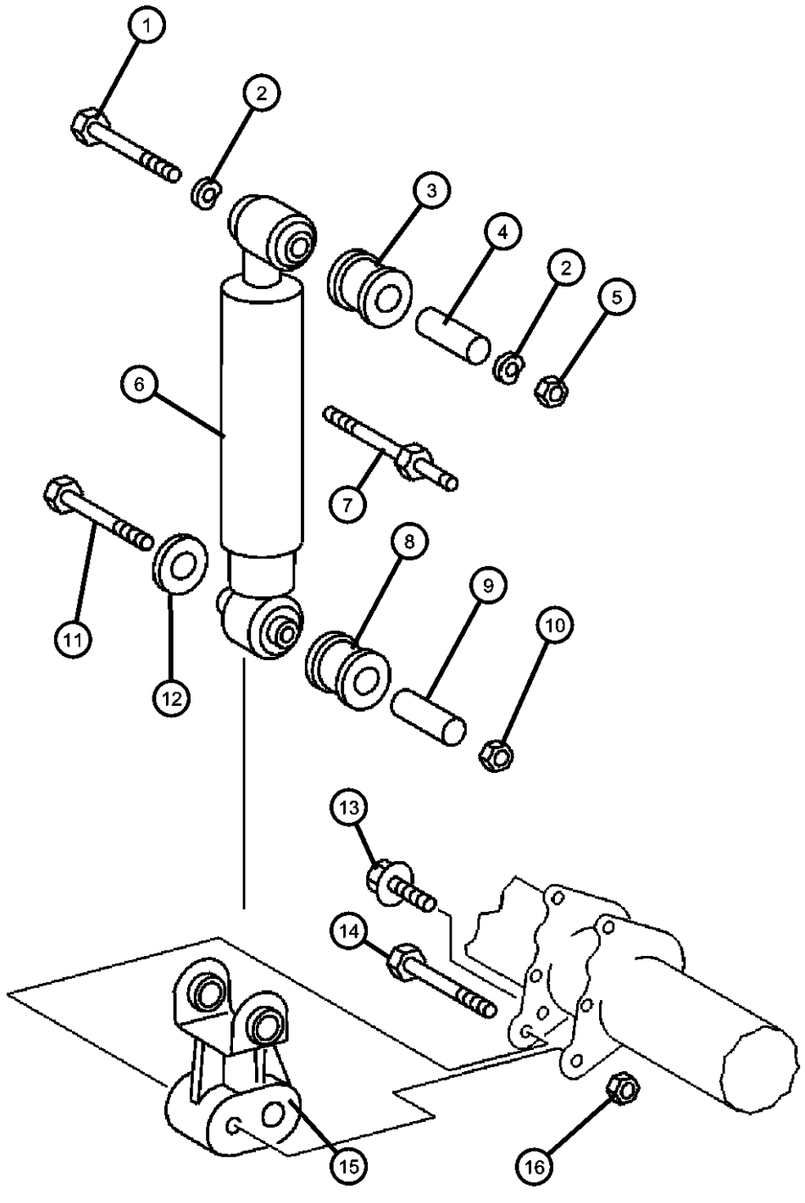

ITEM	PART NUMBER	QTY	LINE	SERIES	BODY	ENGINE	TRANS	TRIM	DESCRIPTION
1									SCREW
	06104265AA	2	3, 7	L	12, 15, 16				
	06104271AA	1	2, 6	L	01, 02, 06				
		1	2, 6	L	11, 12, 14, 15, 16				
		1	2, 6	L	51, 52, 54, 55, 56				
2									SPACER, Shock Absorber Bushing
	05133876AA	4	3, 7	L	12, 15, 16				
	05133883AA	4	2, 6	L	01, 02, 06				
		4	2, 6	L	11, 12, 14, 15, 16				
		4	2, 6	L	51, 52, 54, 55, 56				
3									BUSHING, Shock Absorber
	05133873AA	4	3, 7	L	12, 15, 16				Upper or Lower
	05133879AA	2	2, 6	L	01, 02, 06				Upper
		2	2, 6	L	11, 12, 14, 15, 16				Upper
		2	2, 6	L	51, 52, 54, 55, 56				Upper
4									SLEEVE, Shock Absorber
	05133874AA	2	3, 7	L	12, 15, 16				Upper
	05133881AA	2	2, 6	L	01, 02, 06				Upper
		2	2, 6	L	11, 12, 14, 15, 16				Upper
		2	2, 6	L	51, 52, 54, 55, 56				Upper
5									NUT
	06104719AA	2	2, 6	L	01, 02, 06				
		2	2, 6	L	11, 12, 14, 15, 16				
		2	2, 6	L	51, 52, 54, 55, 56				

SPRINTER (VA)

SERIES	LINE	BODY	ENGINE	TRANSMISSION
L = LOWLINE	3 = HD DODGE 2WD 6 = Lt. Duty DODGE 4WD 2 = Med. Duty DODGE 2WD 7 = Med. Duty DODGE 4WD	55 = Wagon 140" 54 = Wagon 118" 52 = Wagon 140" 51 = Wagon 118" 12 = Van 140" 11 = Van 118" 06 = Front Section 158" 14 = Van 118" 15 = Van 140" 16 = Van 158" 56 = Wagon 158" 01 = Chassis Forward Control 118" 02 = Chassis Forward Control 140"	EX8 = Engine-2.7L I5 Mercedes Turbo Diesel	DGJ = Transmission-5-Spd. Automatic,W5A580

Rear Shocks
Figure 17-110

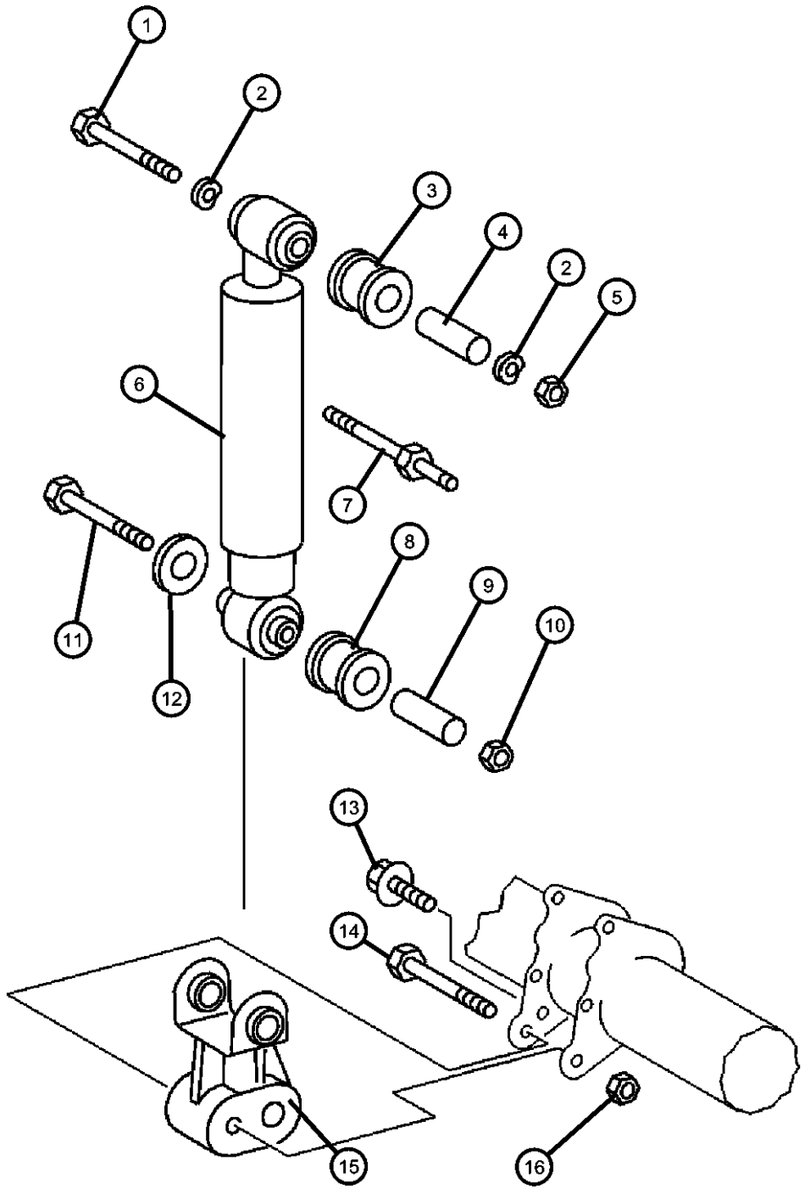

ITEM	PART NUMBER	QTY	LINE	SERIES	BODY	ENGINE	TRANS	TRIM	DESCRIPTION
		2	3, 7	L	12, 15, 16				
6									SHOCK ABSORBER, Suspension, Rear
	05104061AA	2	2, 6	L	11, 12, 14, 15, 16				[3B5]
		2	2, 6	L	51, 52, 54, 55, 56				[3B5]
	05118646AA	2	2, 6	L	01, 02, 06				
		2	2, 6	L	11, 12, 14, 15, 16				
		2	2, 6	L	51, 52, 54, 55, 56				
	05118648AA	2	3, 7	L	12, 15, 16				
	05127644AA	2	2, 6	L	01, 02, 06				[3B5, WDG]
		2	2, 6	L	11, 12, 14, 15, 16				[3B5, WDG]
		2	2, 6	L	51, 52, 54, 55, 56				[3B5, WDG]
7									BOLT
	05118796AA	1	2, 6	L	01, 02, 06				
		1	2, 6	L	11, 12, 14, 15, 16				
		1	2, 6	L	51, 52, 54, 55, 56				
8									BUSHING, Shock Absorber
	05133873AA	4	3, 7	L	12, 15, 16				Upper or Lower
	05133880AA	2	2, 6	L	01, 02, 06				Lower
		2	2, 6	L	11, 12, 14, 15, 16				Lower
		2	2, 6	L	51, 52, 54, 55, 56				Lower
9									SLEEVE, Shock Absorber
	05133875AA	2	3, 7	L	12, 15, 16				Lower
	05133882AA	2	2, 6	L	01, 02, 06				Lower

SPRINTER (VA)

SERIES	LINE	BODY	ENGINE	TRANSMISSION
L = LOWLINE	3 = HD DODGE 2WD 6 = Lt. Duty DODGE 4WD 2 = Med. Duty DODGE 2WD 7 = Med. Duty DODGE 4WD	55 = Wagon 140" 54 = Wagon 118" 52 = Wagon 140" 51 = Wagon 118" 12 = Van 140" 11 = Van 118" 06 = Front Section 158" 14 = Van 118" 15 = Van 140" 16 = Van 158" 56 = Wagon 158" 01 = Chassis Forward Control 118" 02 = Chassis Forward Control 140"	EX8 = Engine-2.7L I5 Mercedes Turbo Diesel	DGJ = Transmission-5-Spd. Automatic,W5A580

Rear Shocks
Figure 17-110

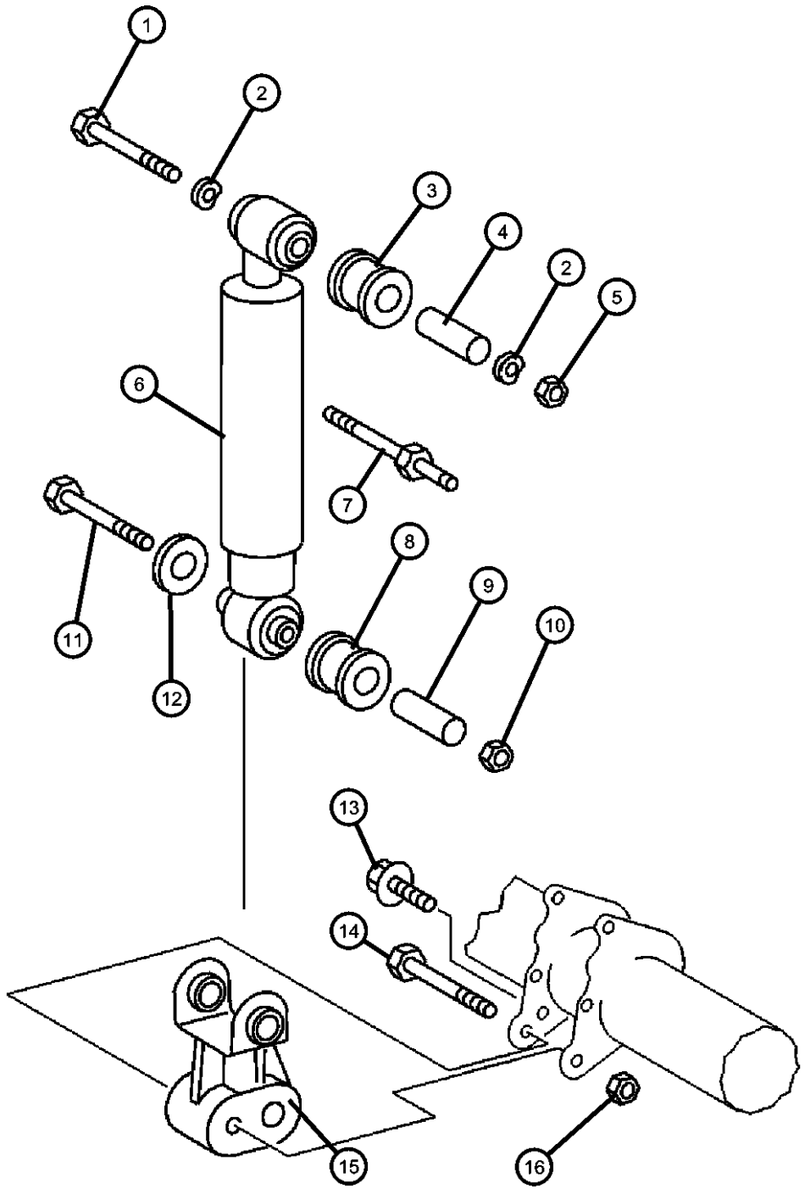

ITEM	PART NUMBER	QTY	LINE	SERIES	BODY	ENGINE	TRANS	TRIM	DESCRIPTION
		2	2, 6	L	11, 12, 14, 15, 16				Lower
		2	2, 6	L	51, 52, 54, 55, 56				Lower
10									NUT
	06104718AA	2	2, 6	L	01, 02, 06				
		2	2, 6	L	11, 12, 14, 15, 16				
		2	2, 6	L	51, 52, 54, 55, 56				
	06104719AA	2	3, 7	L	12, 15, 16				
11									SCREW
	06104241AA	2	2, 6	L	11, 12, 14, 15, 16				
		2	2, 6	L	51, 52, 54, 55, 56				
	06104241AB	2	2, 6	L	01, 02, 06				
	06104270AA	2	3, 7	L	12, 15, 16				
12	05133877AA	4	3, 7	L	12, 15, 16				WASHER, Shock Absorber, To Rear Axle
13	06104223AA	1	2, 3, 6, 7				DGJ		BOLT, As Required
14									SCREW
	06104243AA	2	2, 6	L	11, 12, 14, 15, 16				
		2	2, 6	L	51, 52, 54, 55, 56				
15		2							BRACKET, (NOT SERVICED)
16									NUT
	06104717AA	2	2, 6	L	01, 02, 06				M10x1.5
		2	2, 6	L	11, 12, 14, 15, 16				M10x1.5
		2	2, 6	L	51, 52, 54, 55, 56				M10x1.5
	06104718AA	2	2, 6	L	01, 02, 06				M12x1.5

SPRINTER (VA)

SERIES	LINE	BODY	ENGINE	TRANSMISSION
L = LOWLINE	3 = HD DODGE 2WD 6 = Lt. Duty DODGE 4WD 2 = Med. Duty DODGE 2WD 7 = Med. Duty DODGE 4WD	55 = Wagon 140" 54 = Wagon 118" 52 = Wagon 140" 51 = Wagon 118" 12 = Van 140" 11 = Van 118" 06 = Front Section 158" 14 = Van 118" 15 = Van 140" 16 = Van 158" 56 = Wagon 158" 01 = Chassis Forward Control 118" 02 = Chassis Forward Control 140"	EX8 = Engine-2.7L I5 Mercedes Turbo Diesel	DGJ = Transmission-5-Spd. Automatic,W5A580

Rear Shocks
Figure 17-110

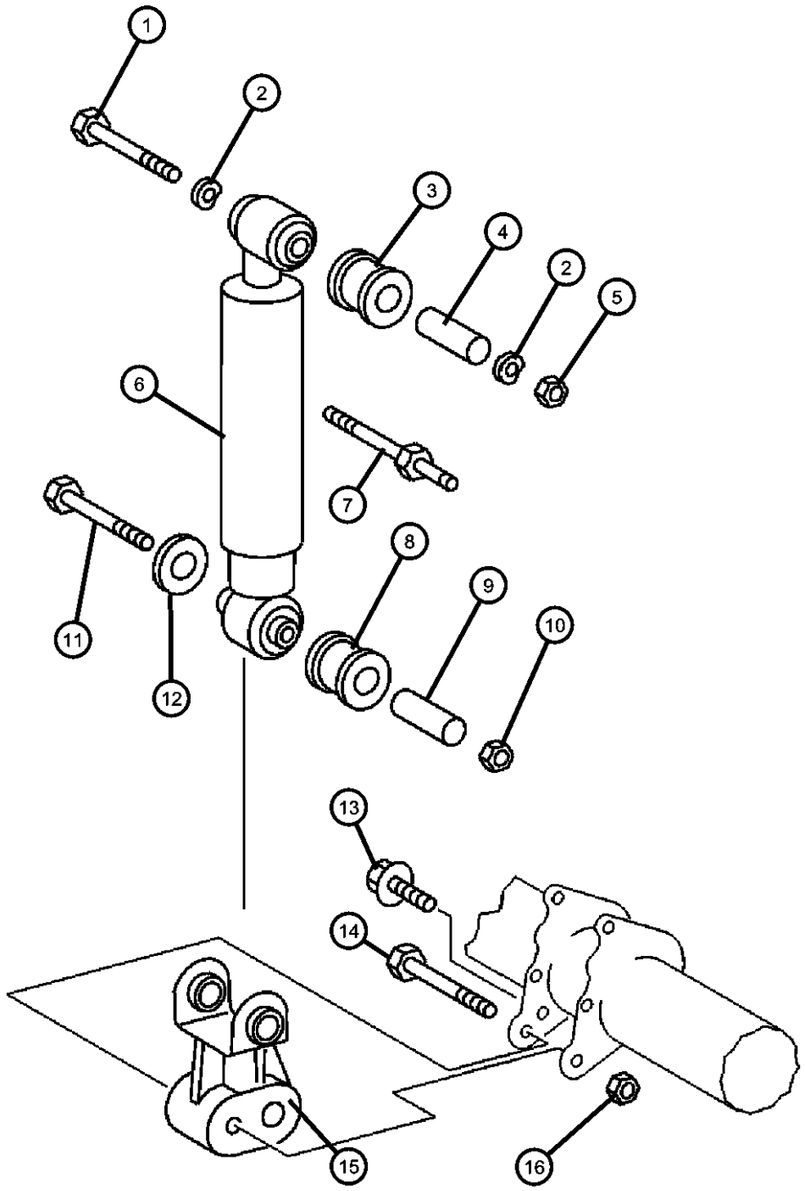

ITEM	PART NUMBER	QTY	LINE	SERIES	BODY	ENGINE	TRANS	TRIM	DESCRIPTION
		2	2, 6	L	11, 12, 14, 15, 16				M12x1.5
		2	2, 6	L	51, 52, 54, 55, 56				M12x1.5

SPRINTER (VA)

SERIES	LINE	BODY	ENGINE	TRANSMISSION
L = LOWLINE	3 = HD DODGE 2WD 6 = Lt. Duty DODGE 4WD 2 = Med. Duty DODGE 2WD 7 = Med. Duty DODGE 4WD	55 = Wagon 140" 54 = Wagon 118" 52 = Wagon 140" 51 = Wagon 118" 12 = Van 140" 11 = Van 118" 06 = Front Section 158" 14 = Van 118" 15 = Van 140" 16 = Van 158" 56 = Wagon 158" 01 = Chassis Forward Control 118" 02 = Chassis Forward Control 140"	EX8 = Engine-2.7L I5 Mercedes Turbo Diesel	DGJ = Transmission-5-Spd. Automatic,W5A580

Rear Springs, 2500 Series
Figure 17-120

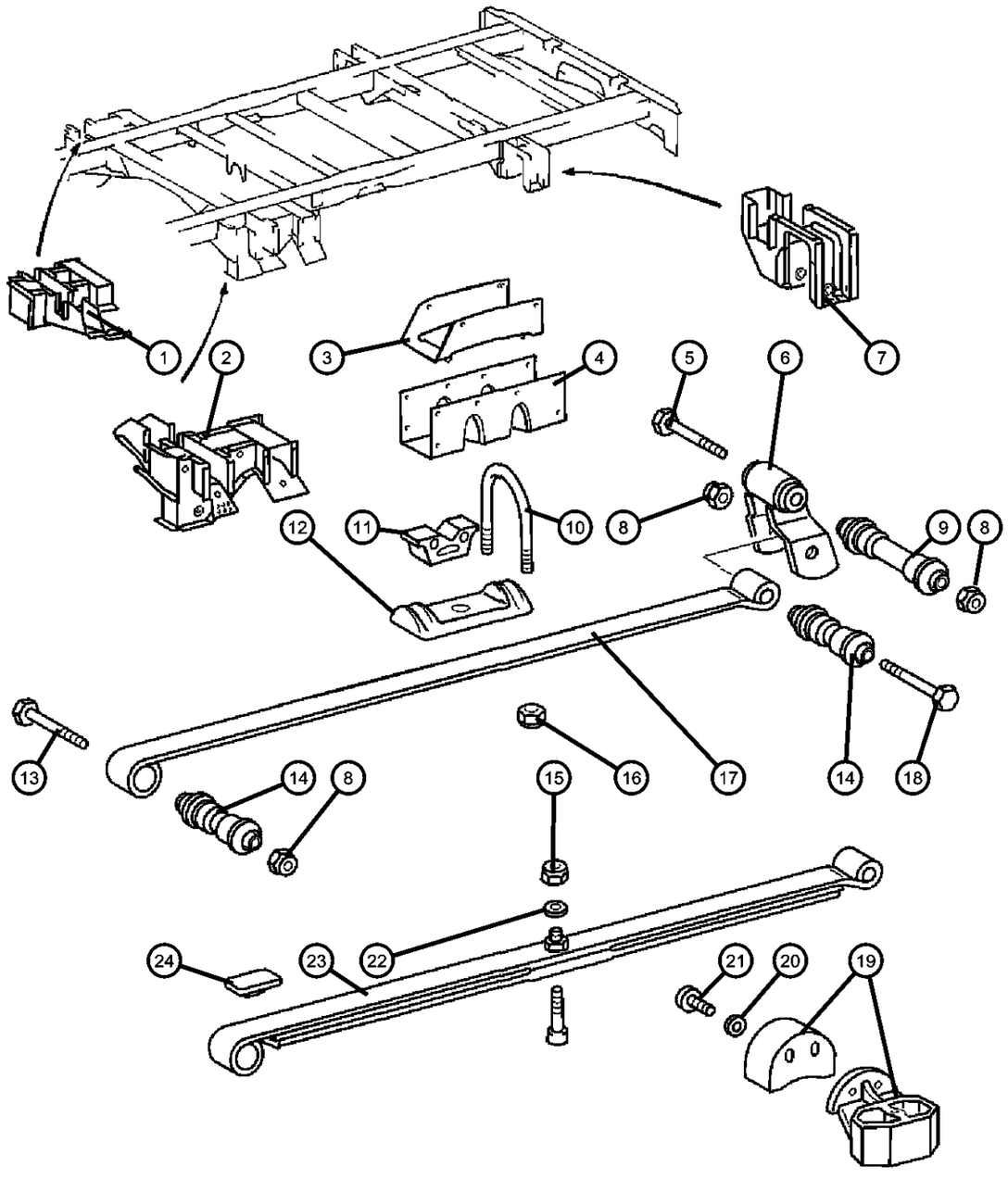

ITEM	PART NUMBER	QTY	LINE	SERIES	BODY	ENGINE	TRANS	TRIM	DESCRIPTION
1									BRACKET, Spring Shackle
	05118670AA	1	2, 6	L	11, 14				Without [5AC,GKA], Right Front
		1	2, 6	L	51, 54				Without [5AC,GKA], Right Front
	05118672AA	1	2, 6	L	11, 14				With [5AC,GKA], Right Front
		1	2, 6	L	51, 54				With [5AC,GKA], Right Front
	05118676AA	2	2, 6	L	01, 02, 06				Right Front
2									BRACKET, Spring Shackle
	05118668AA	1	2, 6	L	11, 14				Left Front
	05128553AA	1	2, 6	L	11, 14				[5AC,GKE], Left Front
		1	2, 6	L	51, 54				[5AC,GKE], Left Front
3									BRACKET
	05118337AA	2	2, 6	L	01, 02, 06				
		2	2, 6	L	11, 12, 14, 15, 16				
		2	2, 6	L	51, 52, 54, 55, 56				
4									TRUSS, Leaf spring
	05118347AA	2	2, 6	L	01, 02, 06				
		2	2, 6	L	11, 12, 14, 15, 16				Without [4XZ]
		2	2, 6	L	51, 52, 54, 55, 56				
	05128390AA	2	2, 6	L	11, 12, 14, 15, 16				Wtih [4XZ]
5									BOLT
	05118734AA	2	2, 6	L	01, 02, 06				Shackle to Frame Rear, Mounting
		2	2, 6	L	11, 12, 14, 15, 16				Shackle to Frame Rear, Mounting
		2	2, 6	L	51, 52, 54, 55, 56				Shackle to Frame Rear, Mounting
6									SHACKLE, Spring
	05118653AA	2	2, 6	L	01, 02, 06				

SPRINTER (VA)

SERIES	LINE	BODY	ENGINE	TRANSMISSION
L = LOWLINE	3 = HD DODGE 2WD 6 = Lt. Duty DODGE 4WD 2 = Med. Duty DODGE 2WD 7 = Med. Duty DODGE 4WD	55 = Wagon 140" 54 = Wagon 118" 52 = Wagon 140" 51 = Wagon 118" 12 = Van 140" 11 = Van 118" 06 = Front Section 158" 14 = Van 118" 15 = Van 140" 16 = Van 158" 56 = Wagon 158" 01 = Chassis Forward Control 118" 02 = Chassis Forward Control 140"	EX8 = Engine-2.7L I5 Mercedes Turbo Diesel	DGJ = Transmission-5-Spd. Automatic,W5A580

Rear Springs, 2500 Series
Figure 17-120

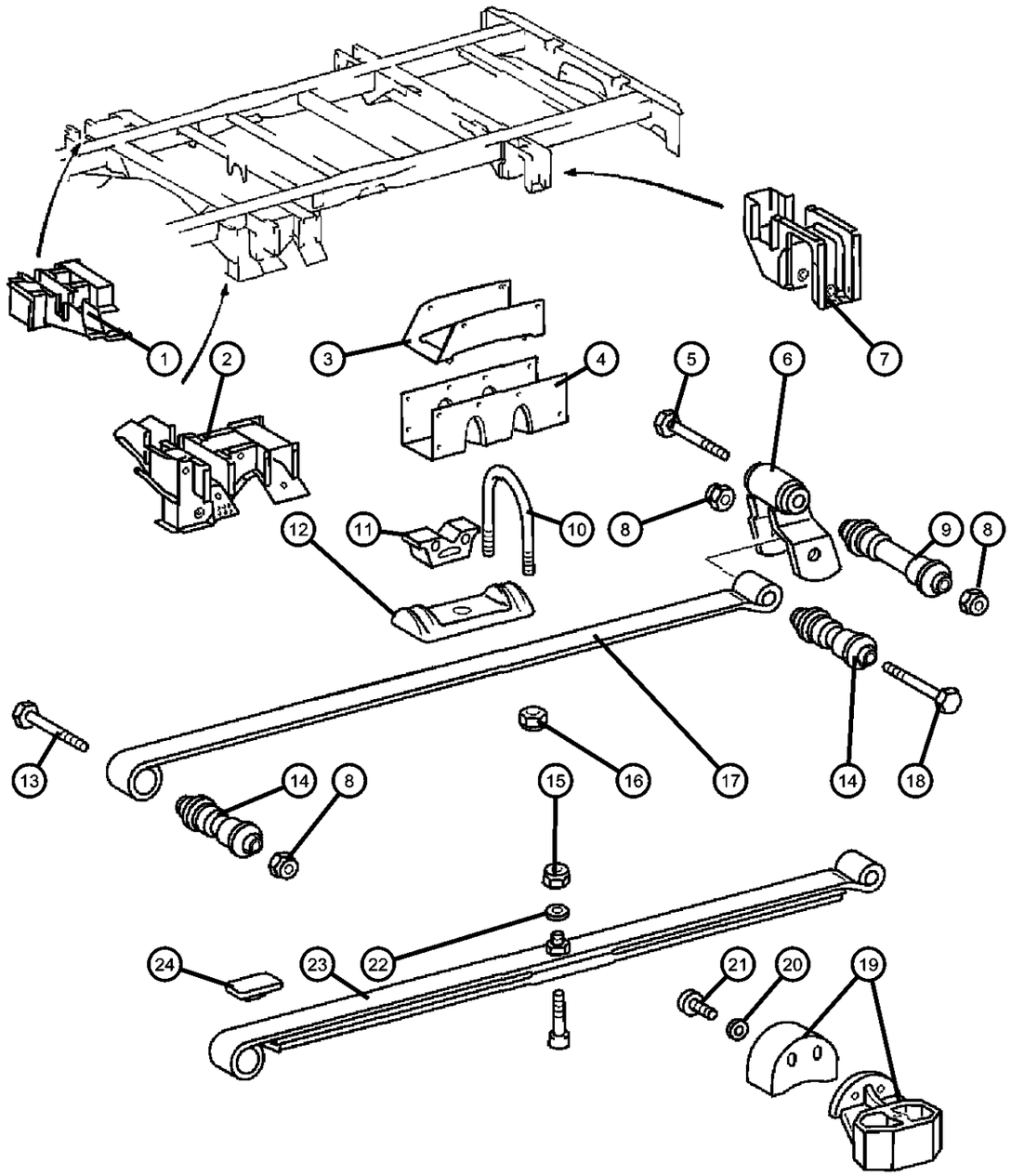

ITEM	PART NUMBER	QTY	LINE	SERIES	BODY	ENGINE	TRANS	TRIM	DESCRIPTION
		2	2, 6	L	11, 12, 14, 15, 16				
		2	2, 6	L	51, 52, 54, 55, 56				
7									BRACKET, Spring Shackle
	05118663AA	2	2, 6	L	12, 15				[5AE], Right or Left, Rear
		2	2, 6	L	52, 55				[5AE], Right or Left, Rear
		2	2, 6	L	01, 02, 06				Without [4XZ], Right or Left, Rear
	05118665AA	2	2, 6	L	11, 14				[5AC], Right or Left, Rear
		2	2, 6	L	16				[5AF], Right or Left, Rear
		2	2, 6	L	51, 54				[5AC], Right or Left, Rear
		2	2, 6	L	56				[5AF], Right or Left, Rear
	05128557AA	2	2, 6	L	11, 14				[5AC,4XZ], Right or Left, Rear
		2	2, 6	L	51, 54				[5AC,4XZ], Right or Left, Rear
	05128559AA	2	2, 6	L	12, 15				[5AE,4XZ], Right or Left, Rear
		2	2, 6	L	52, 55				[5AE,4XZ], Right or Left, Rear
	05128561AA	2	2, 6	L	16				[5AF,4XZ], Right or Left, Rear
		2	2, 6	L	56				[5AF,4XZ], Right or Left, Rear
8									NUT
	06104718AA	2	2, 6	L	01, 02, 06				Shackle to Frame and Spring, Mounting
		2	2, 6	L	11, 12, 14, 15, 16				Shackle to Frame and Spring, Mounting
		2	2, 6	L	51, 52, 54, 55, 56				Shackle to Frame and Spring, Mounting
9									BUSHING, Shackle
	05118731AA	2	2, 6	L	01, 02, 06				Right or Left
		2	2, 6	L	11, 12, 14, 15, 16				Right or Left
		2	2, 6	L	51, 52, 54, 55, 56				Right or Left
10									U-BOLT

SPRINTER (VA)

SERIES	LINE	BODY	ENGINE	TRANSMISSION
L = LOWLINE	3 = HD DODGE 2WD 6 = Lt. Duty DODGE 4WD 2 = Med. Duty DODGE 2WD 7 = Med. Duty DODGE 4WD	55 = Wagon 140" 54 = Wagon 118" 52 = Wagon 140" 51 = Wagon 118" 12 = Van 140" 11 = Van 118" 06 = Front Section 158" 14 = Van 118" 15 = Van 140" 16 = Van 158" 56 = Wagon 158" 01 = Chassis Forward Control 118" 02 = Chassis Forward Control 140"	EX8 = Engine-2.7L I5 Mercedes Turbo Diesel	DGJ = Transmission-5-Spd. Automatic,W5A580

AR = use ase required - = Non illustrrated part

Rear Springs, 2500 Series
Figure 17-120

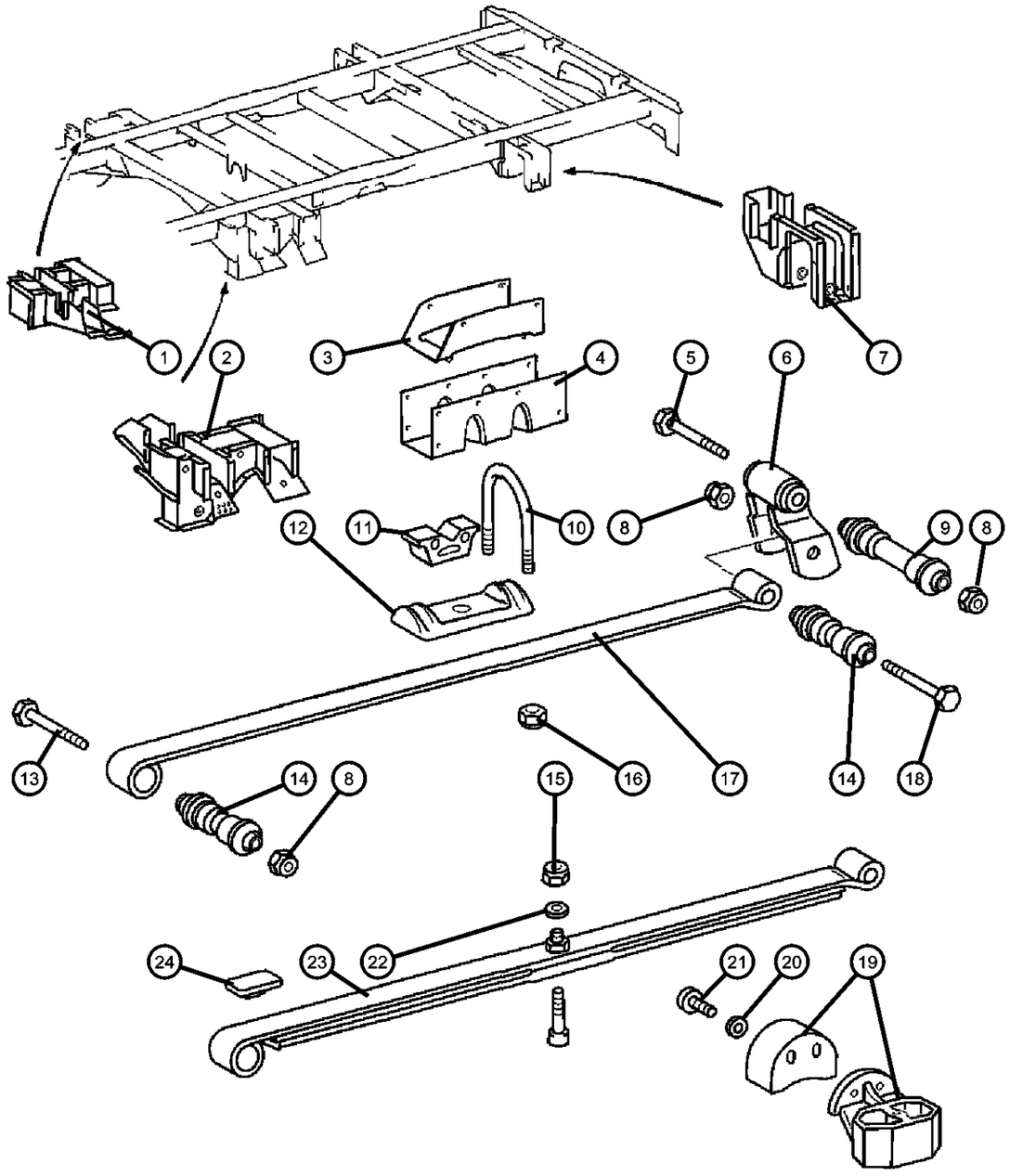

ITEM	PART NUMBER	QTY	LINE	SERIES	BODY	ENGINE	TRANS	TRIM	DESCRIPTION
	05104069AA	4	2, 6	L	01, 02, 06				
		4	2, 6	L	11, 12, 14, 15, 16				
	05104070AA	4	2, 6	L	51, 52, 54, 55, 56				
11									BUMPER, Jounce
	05118762AA	2	2, 6	L	01, 02, 06				Without [WDG]
		2	2, 6	L	11, 12, 14, 15, 16				Without [WDG]
		2	2, 6	L	51, 52, 54, 55, 56				Without [WDG]
	05128586AA	2	2, 6	L	01, 02, 06				With [WDG]
		2	2, 6	L	11, 12, 14, 15, 16				With [WDG]
		2	2, 6	L	51, 52, 54, 55, 56				With [WDG]
12									PLATE, Rear Spring U-Bolt
	05118774AA	2	2, 6	L	01, 02, 06				
		2	2, 6	L	11, 12, 14, 15, 16				
		2	2, 6	L	51, 52, 54, 55, 56				
13									BOLT
	06104247AA	2	2, 6	L	11, 12, 14, 15, 16				Shackle to Frame Front, Mounting
		2	2, 6	L	51, 52, 54, 55, 56				Shackle to Frame Front, Mounting
14									BUSHING, Spring
	05118732AA	4	2, 6	L	01, 02, 06				Front or Rear
		4	2, 6	L	11, 12, 14, 15, 16				Front or Rear
		4	2, 6	L	51, 52, 54, 55, 56				Front or Rear
15									NUT, Hex

SPRINTER (VA)

SERIES	LINE	BODY	ENGINE	TRANSMISSION
L = LOWLINE	3 = HD DODGE 2WD 6 = Lt. Duty DODGE 4WD 2 = Med. Duty DODGE 2WD 7 = Med. Duty DODGE 4WD	55 = Wagon 140" 54 = Wagon 118" 52 = Wagon 140" 51 = Wagon 118" 12 = Van 140" 11 = Van 118" 06 = Front Section 158" 14 = Van 118" 15 = Van 140" 16 = Van 158" 56 = Wagon 158" 01 = Chassis Forward Control 118" 02 = Chassis Forward Control 140"	EX8 = Engine-2.7L I5 Mercedes Turbo Diesel	DGJ = Transmission-5-Spd. Automatic,W5A580

Rear Springs, 2500 Series
Figure 17-120

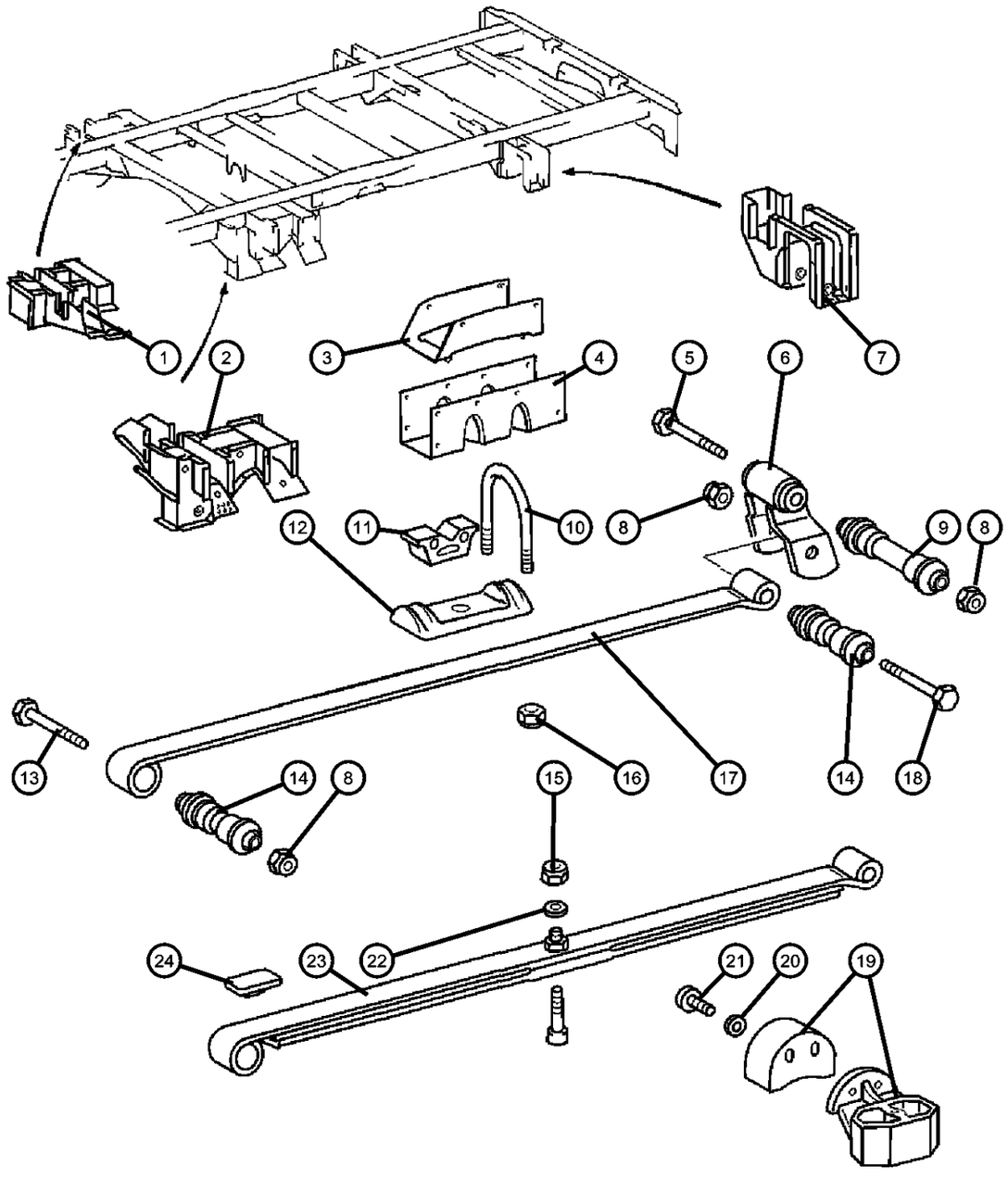

ITEM	PART NUMBER	QTY	LINE	SERIES	BODY	ENGINE	TRANS	TRIM	DESCRIPTION
	05097685AA	2	2, 6	L	11, 12, 14, 15, 16				
		2	2, 6	L	51, 52, 54, 55, 56				
		2	2, 6	L	01, 02, 06				
16									NUT
	05103727AA	8	2, 6	L	01, 02, 06				
		8	2, 6	L	11, 12, 14, 15, 16				
		8	2, 6	L	51, 52, 54, 55, 56				
17									SPRING, Rear
	05128488AA	2	2, 6	L	01, 02, 06				[4E9,WDG,3AT]
		2	2, 6	L	11, 12, 14, 15, 16				[4E9,WDG,3AT]
	05118616AA	2	2, 6	L	01, 02, 06				[4E9], Right or Left
		2	2, 6	L	11, 12, 14, 15, 16				[4E9], Right or Left
	05118619AA	2	6, 2	L	51, 52, 54, 55, 56				
	05128482AA	2	2, 6	L	01, 02, 06				[4E9,3AT], Right or Left
		2	2, 6	L	11, 12, 14, 15, 16				[4E9,3AT], Right or Left
18									BOLT
	05125718AA	2	2, 6	L	01, 02, 06				Shackle to Spring Rear, Mounting
		2	2, 6	L	11, 12, 14, 15, 16				Shackle to Spring Rear, Mounting
		2	2, 6	L	51, 52, 54, 55, 56				Shackle to Spring Rear, Mounting
19		2							SHIM, (NOT SERVICED),
20	05126126AA	4	2, 6	L	11, 12, 14, 15, 16				NUT
21									BOLT
	05097678AA	4	2, 6	L	11, 12, 14, 15, 16				

SPRINTER (VA)

SERIES	LINE	BODY	ENGINE	TRANSMISSION
L = LOWLINE	3 = HD DODGE 2WD 6 = Lt. Duty DODGE 4WD 2 = Med. Duty DODGE 2WD 7 = Med. Duty DODGE 4WD	55 = Wagon 140" 54 = Wagon 118" 52 = Wagon 140" 51 = Wagon 118" 12 = Van 140" 11 = Van 118" 06 = Front Section 158" 14 = Van 118" 15 = Van 140" 16 = Van 158" 56 = Wagon 158" 01 = Chassis Forward Control 118" 02 = Chassis Forward Control 140"	EX8 = Engine-2.7L I5 Mercedes Turbo Diesel	DGJ = Transmission-5-Spd. Automatic,W5A580

Rear Springs, 2500 Series
Figure 17-120

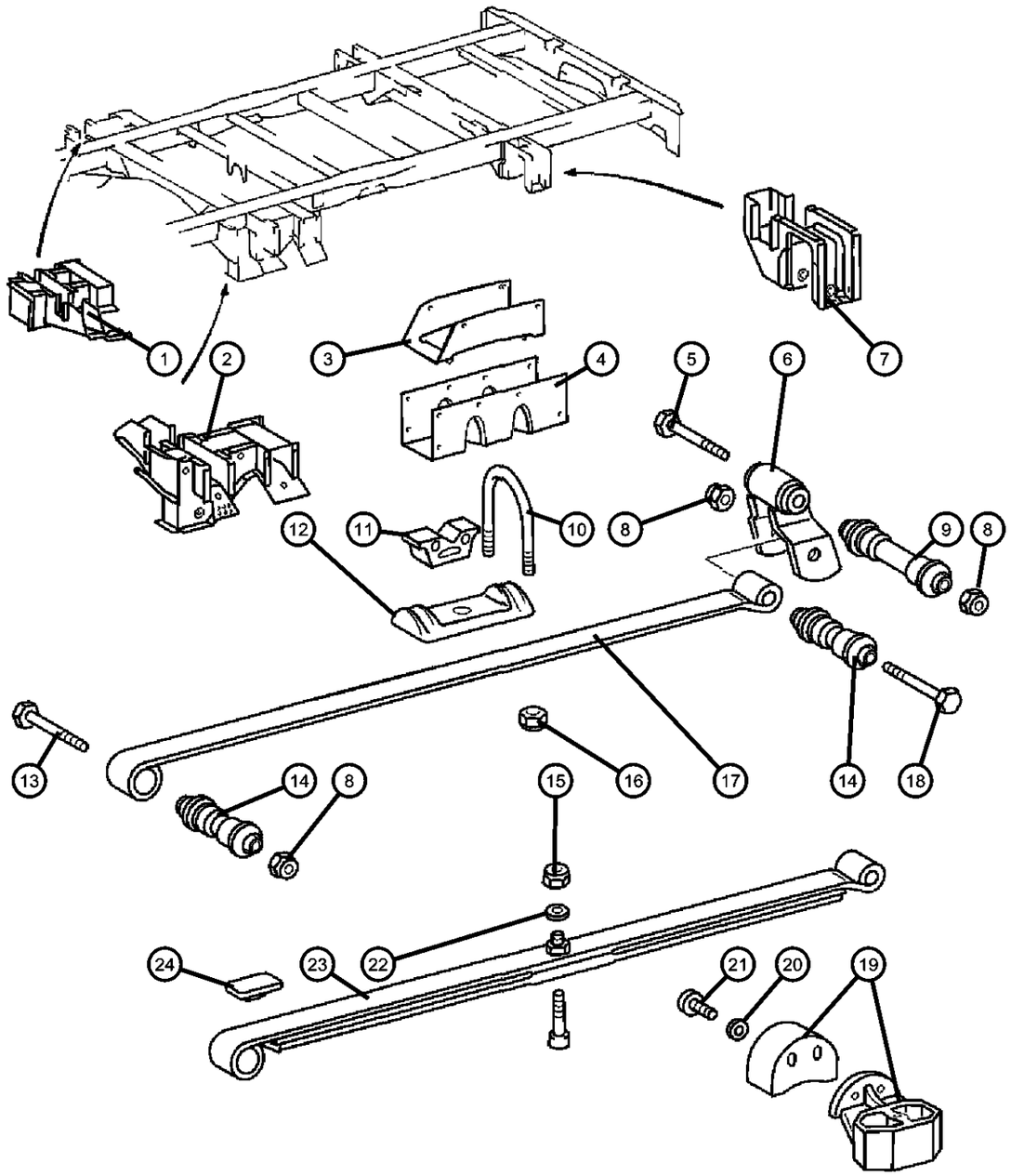

ITEM	PART NUMBER	QTY	LINE	SERIES	BODY	ENGINE	TRANS	TRIM	DESCRIPTION
		4	2, 6	L	51, 52, 54, 55, 56				
22	05133886AA	2	2, 3, 6, 7				DGJ		WASHER
23									SPRING, Rear
	05118619AA	2	2, 6	L	51, 52, 54, 55, 56				[4E9]
	05128484AA	2	2, 6	L	51, 52, 54, 55, 56				[4E9,3B4]
	05128490AA	2	2, 6	L	51, 52, 54, 55, 56				[4E9,3B4,WDG]
24	05104068AA	4	2, 6	L	51, 52, 54, 55, 56				CUSHION, [4E9,3B4]

SPRINTER (VA)

SERIES	LINE	BODY	ENGINE	TRANSMISSION
L = LOWLINE	3 = HD DODGE 2WD 6 = Lt. Duty DODGE 4WD 2 = Med. Duty DODGE 2WD 7 = Med. Duty DODGE 4WD	55 = Wagon 140" 54 = Wagon 118" 52 = Wagon 140" 51 = Wagon 118" 12 = Van 140" 11 = Van 118" 06 = Front Section 158" 14 = Van 118" 15 = Van 140" 16 = Van 158" 56 = Wagon 158" 01 = Chassis Forward Control 118" 02 = Chassis Forward Control 140"	EX8 = Engine-2.7L I5 Mercedes Turbo Diesel	DGJ = Transmission-5-Spd. Automatic,W5A580

AR = use ase required - = Non illustrrated part

Rear Springs, 3500 Series
Figure 17-130

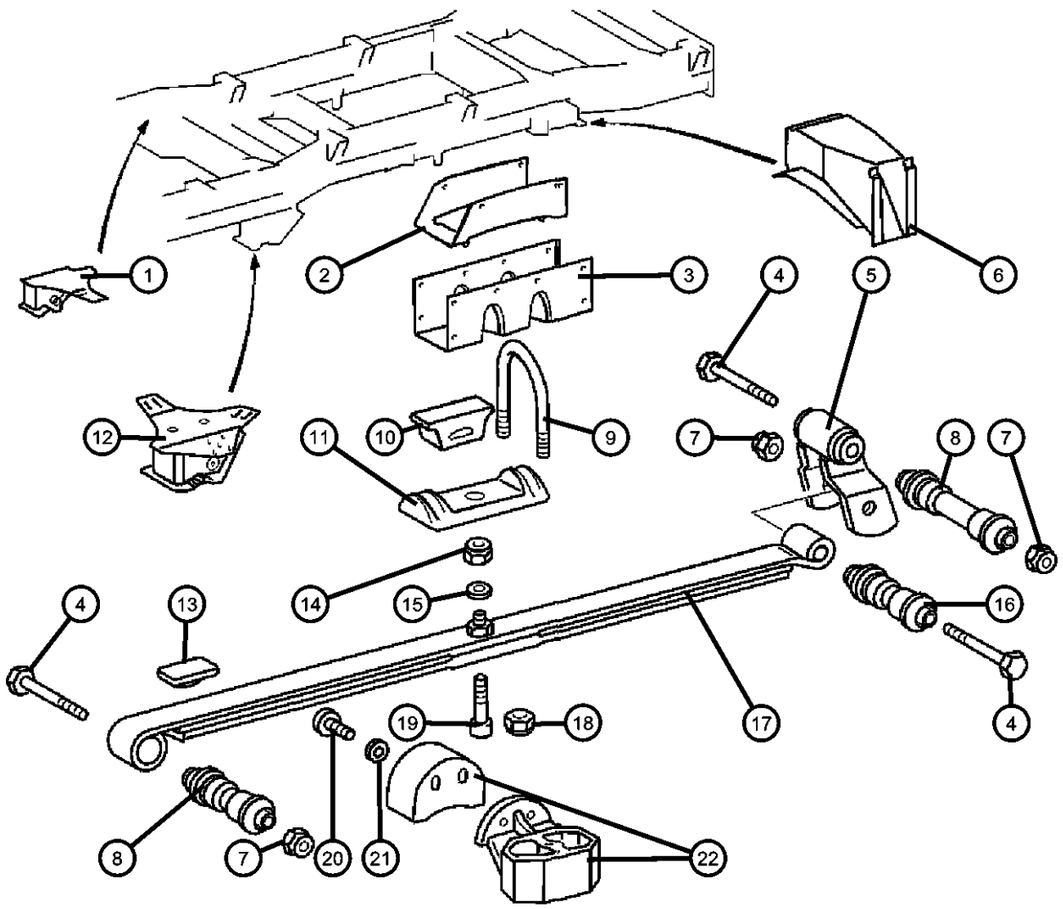

ITEM	PART NUMBER	QTY	LINE	SERIES	BODY	ENGINE	TRANS	TRIM	DESCRIPTION
1	05118688AA	1	3, 7	L	12, 15, 16				BRACKET, SpringRight Front
2	05118339AA	2	3, 7	L	12, 15, 16				BRACKET, SpringRight or Left
3	05118355AA	2	3, 7	L	12, 15, 16				TRUSS, Leaf springRight or Left
4	06104285AA	2	3, 7	L	12, 15, 16				SCREW
5	05118655AA	2	3, 7	L	12, 15, 16				SHACKLE, SpringRight or Left
6	05118680AA	2	3, 7	L	12, 15, 16				BRACKET, SpringRight or Left
7	05125760AA	2	3, 7	L	12, 15, 16				NUT, Hex Flange Lock
8	05118729AA	2	3, 7	L	12, 15, 16				BUSHING, SpringFront
9	05118765AA	4	3, 7	L	12, 15, 16				U-BOLT
10	05118759AA	2	3, 7	L	12, 15, 16				BUMPER, Spring, Rear
11	05118759AA	2							PLATE, (NOT SERVICED)
12	05118686AA	1	3, 7	L	12, 15, 16				BRACKET, SpringLeft Front
13	05104068AA	4	3, 7	L	12, 15, 16				CUSHION
14	05133872AA	2	3, 7	L					NUT, Hex
15	05126120AB	2	3, 7	L	12, 15, 16				WASHER, Spring
16	05118703AA	2	3, 7	L	12, 15, 16				BUSHING, SpringRear
17	05118621AA	2	3, 7	L	12, 15, 16				SPRING, RearRight or Left
18	05103727AA	8	3, 7	L	12, 15, 16				NUT
19	05133871AA	2	3, 7	L	12, 15, 16				BOLT
20	05097678AA	4	3, 7	L	12, 15, 16				BOLT
21	05126126AA	4	3, 7	L	12, 15, 16				NUT
22	05126126AA	4							SHIM, (NOT SERVICED)

SPRINTER (VA)

SERIES	LINE	BODY	ENGINE	TRANSMISSION
L = LOWLINE	3 = HD DODGE 2WD 6 = Lt. Duty DODGE 4WD 2 = Med. Duty DODGE 2WD 7 = Med. Duty DODGE 4WD	55 = Wagon 140" 54 = Wagon 118" 52 = Wagon 140" 51 = Wagon 118" 12 = Van 140" 11 = Van 118" 06 = Front Section 158" 14 = Van 118" 15 = Van 140" 16 = Van 158" 56 = Wagon 158" 01 = Chassis Forward Control 118" 02 = Chassis Forward Control 140"	EX8 = Engine-2.7L I5 Mercedes Turbo Diesel	DGJ = Transmission-5-Spd. Automatic,W5A580

Stabilizer Bar,Rear
Figure 17-210

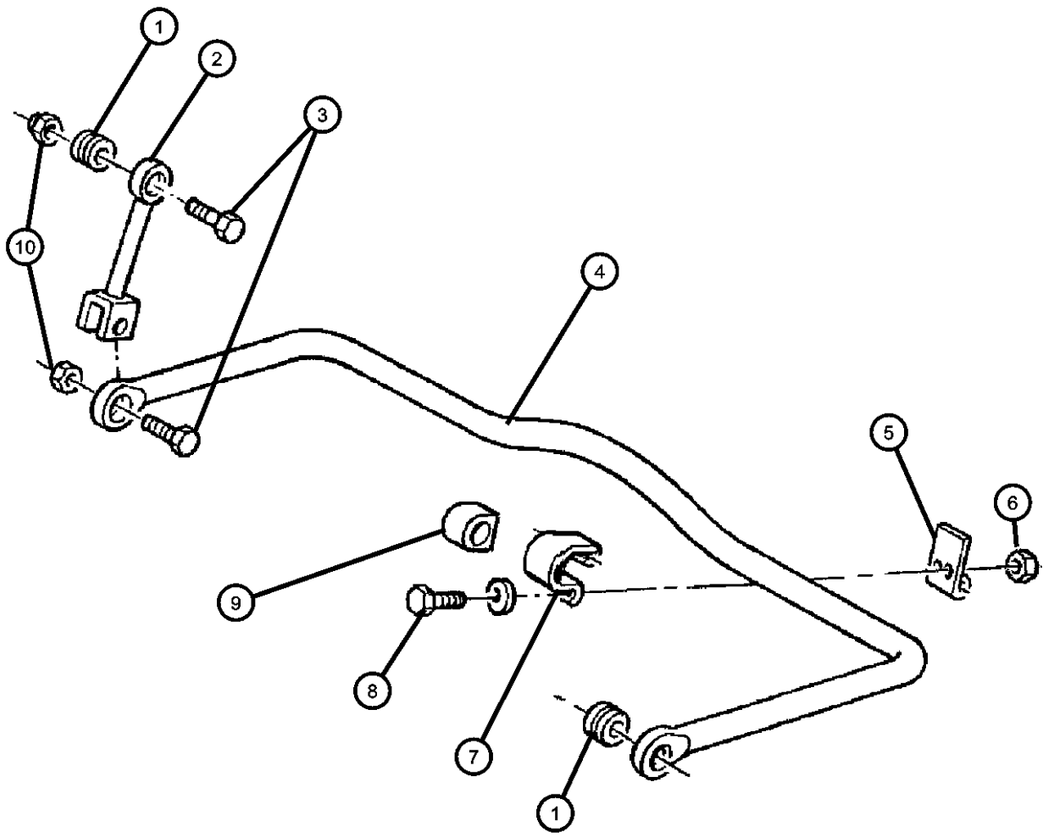

ITEM	PART NUMBER	QTY	LINE	SERIES	BODY	ENGINE	TRANS	TRIM	DESCRIPTION
1									BUSHING, Stabilizer Bar
	05103955AA	2	2, 6	L	11, 12, 14, 15, 16				
		2	2, 6	L	51, 52, 54, 55, 56				
		2	3, 7	L	12, 15, 16				
2									LINK, Stabilizer Bar
	05104058AA	2	2, 6	L	11, 12, 14, 15, 16				
		2	2, 6	L	51, 52, 54, 55, 56				
	05118696AA	2	3, 7	L	12, 15, 16				
3									BOLT
	06104238AA	4	2, 6	L	11, 12, 14, 15, 16				
		4	2, 6	L	51, 52, 54, 55, 56				
4									SWAY BAR
	05118632AA	1	3, 7	L	12, 15, 16				
	05128494AA	1	2, 6	L	11, 12, 14, 15, 16				
		1	2, 6	L	51, 52, 54, 55, 56				
5									BRACKET, Stabilizer Bar
	05128598AA	2	2, 6	L	11, 12, 14, 15, 16				
		2	2, 6	L	51, 52, 54, 55, 56				
6									NUT
	06104716AA	4	2, 6	L	11, 12, 14, 15, 16				
		4	2, 6	L	51, 52, 54, 55, 56				
		4	3, 7	L	12, 15, 16				
7									RETAINER, Stabilizer Bar Grommet

SPRINTER (VA)

SERIES	LINE	BODY	ENGINE	TRANSMISSION
L = LOWLINE	3 = HD DODGE 2WD 6 = Lt. Duty DODGE 4WD 2 = Med. Duty DODGE 2WD 7 = Med. Duty DODGE 4WD	55 = Wagon 140" 54 = Wagon 118" 52 = Wagon 140" 51 = Wagon 118" 12 = Van 140" 11 = Van 118" 06 = Front Section 158" 14 = Van 118" 15 = Van 140" 16 = Van 158" 56 = Wagon 158" 01 = Chassis Forward Control 118" 02 = Chassis Forward Control 140"	EX8 = Engine-2.7L I5 Mercedes Turbo Diesel	DGJ = Transmission-5-Spd. Automatic,W5A580

Stabilizer Bar,Rear
Figure 17-210

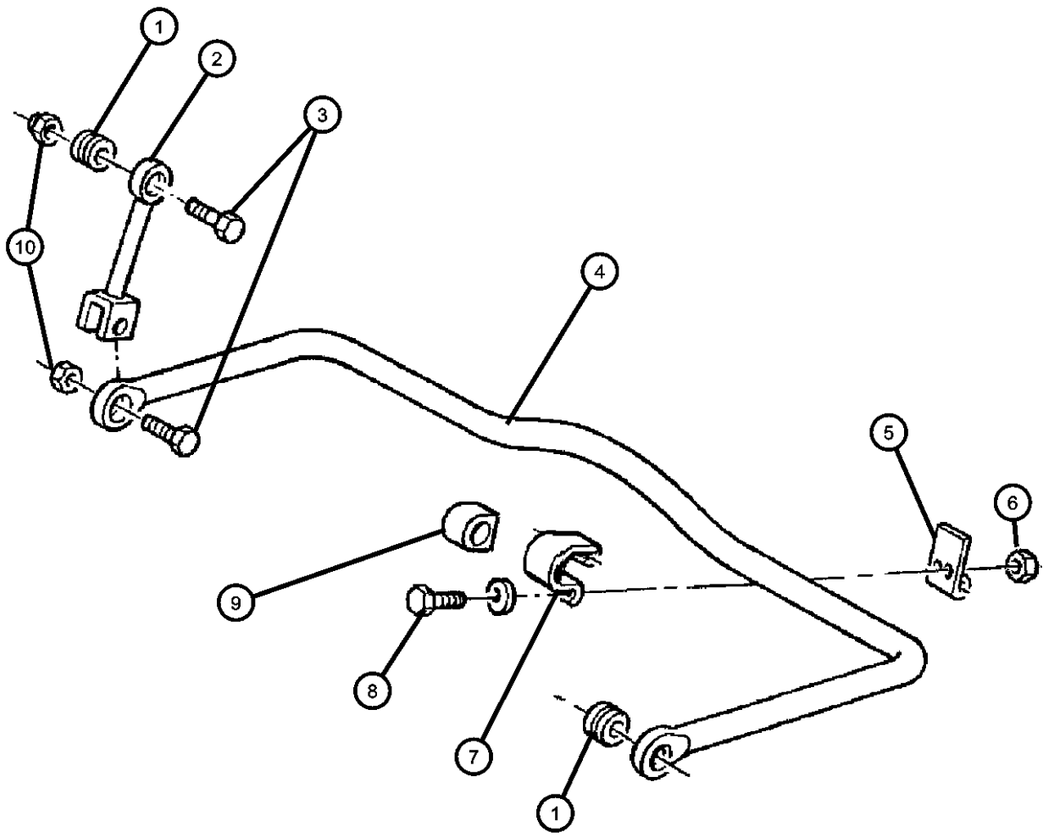

ITEM	PART NUMBER	QTY	LINE	SERIES	BODY	ENGINE	TRANS	TRIM	DESCRIPTION
	05132782AA	2	2, 6	L	11, 12, 14, 15, 16				
		2	2, 6	L	51, 52, 54, 55, 56				
	05136068AA	2	3, 7	L	12, 15, 16				
8									SCREW
	06104031AA	4	2, 6	L	11, 12, 14, 15, 16				
		4	2, 6	L	51, 52, 54, 55, 56				
		4	3, 7	L	12, 15, 16				
9									BUSHING, Stabilizer Bar
	05104073AA	2	2, 6	L	11, 12, 14, 15, 16				
		2	2, 6	L	51, 52, 54, 55, 56				
	05118800AA	2	3, 7	L	12, 15, 16				
10									NUT
	06104718AA	4	2, 6	L	11, 12, 14, 15, 16				
		4	2, 6	L	51, 52, 54, 55, 56				
		8	3, 7	L	12, 15, 16				

SPRINTER (VA)

SERIES	LINE	BODY	ENGINE	TRANSMISSION
L = LOWLINE	3 = HD DODGE 2WD 6 = Lt. Duty DODGE 4WD 2 = Med. Duty DODGE 2WD 7 = Med. Duty DODGE 4WD	55 = Wagon 140" 54 = Wagon 118" 52 = Wagon 140" 51 = Wagon 118" 12 = Van 140" 11 = Van 118" 06 = Front Section 158" 14 = Van 118" 15 = Van 140" 16 = Van 158" 56 = Wagon 158" 01 = Chassis Forward Control 118" 02 = Chassis Forward Control 140"	EX8 = Engine-2.7L I5 Mercedes Turbo Diesel	DGJ = Transmission-5-Spd. Automatic,W5A580

Group - 19

Steering

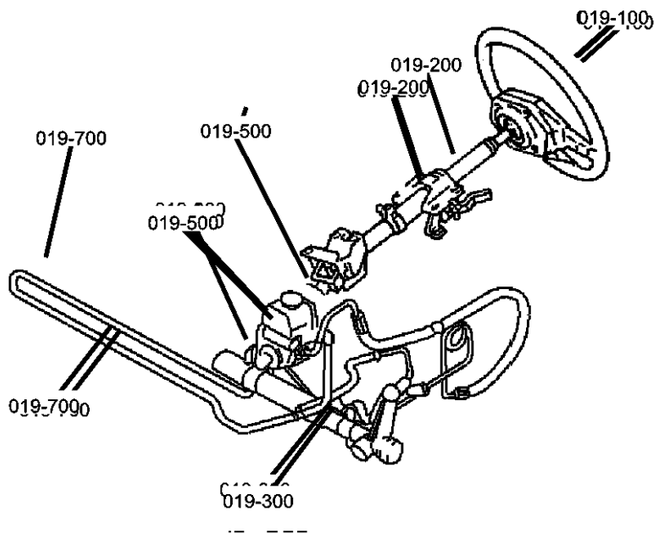

019-100 Steering Wheel	019-200 Steering Column	019-300 Steering Gear	019-500 Power Steering Pump
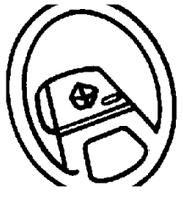	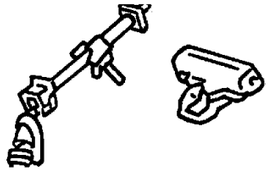	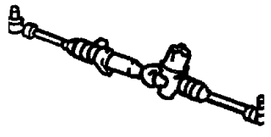	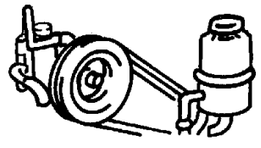
019-700 Power Steering Hoses 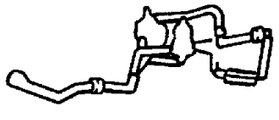			

Group - 19 Steering

Illustration Title — Group-Fig. No.

Steering Wheel
Steering Wheel and Related ..... Fig. 19 - 110

Steering Column
Column Steering and Related ..... Fig. 19 - 210

Steering Gear
Gear - Steering ..... Fig. 19 - 310

Power Steering Pump
Pump and Pulley, Steering ..... Fig. 19 - 510

Power Steering Hoses
Hoses Steering and Related ..... Fig. 19 - 710

Steering Wheel and Related
Figure 19-110

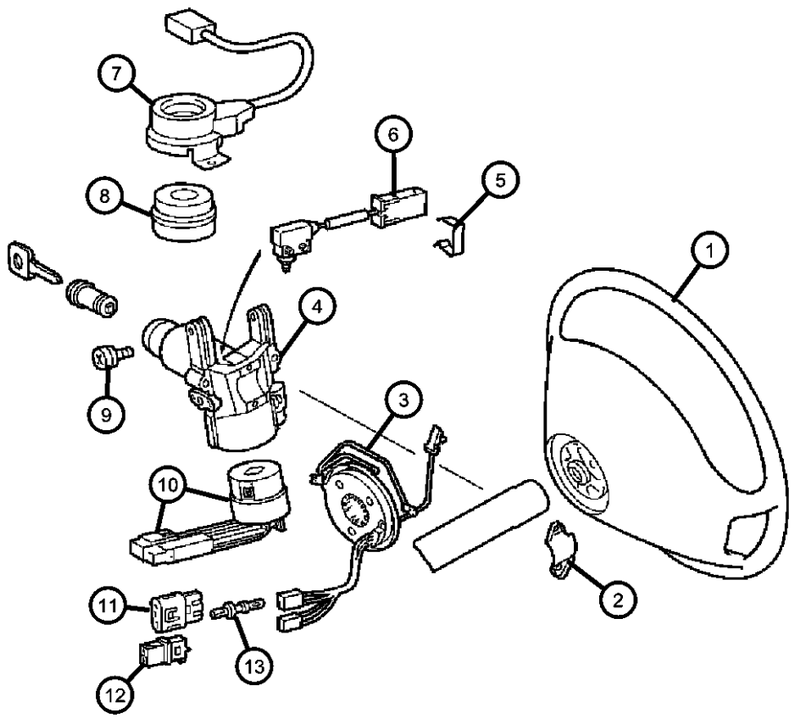

ITEM	PART NUMBER	QTY	LINE	SERIES	BODY	ENGINE	TRANS	TRIM	DESCRIPTION
Sale Code EX8=2.7L I5 MERCEDES-BENZ									
1									WHEEL, Steering
	0ZF45BD1AA	1	3, 7	L	02, 06				
		1	2, 6	L	01, 02, 06				
		1	2, 6	L	16, 11, 12, 14, 15				
		1	2, 6	L	51, 52, 54, 55, 56				
		1	3, 7	L	12, 15, 16				
2									BRACKET, STEERING LOCK, SPRINTER
	05104096AA	1	2, 6	L	11, 12, 14, 15, 16				
		1	2, 6	L	51, 52, 54, 55, 56				
		1	3, 7	L	12, 15, 16				
3									CLOCKSPRING
	05104089AA	1	2, 6	L	01, 02, 06				
		1	2, 6	L	11, 12, 14, 15, 16				
		1	2, 6	L	51, 52, 54, 55, 56				
		1	3, 7	L	02, 06				
		1	3, 7	L	12, 15, 16				
4									HOUSING, Steering Column Lock
	05104092AA	1	2, 6	L	01, 02, 06		DGJ		
		1	2, 6	L	11, 12, 14, 15, 16		DGJ		
		1	2, 6	L	51, 52, 54, 55, 56		DGJ		
		1	3, 7	L	02, 06		DGJ		
		1	3, 7	L	15, 16, 12		DGJ		
5									SPRING
	05103660AA	1	2, 6	L	01, 02, 06		DGJ		

SPRINTER (VA)

SERIES	LINE	BODY	ENGINE	TRANSMISSION
L = LOWLINE	3 = HD DODGE 2WD 6 = Lt. Duty DODGE 4WD 2 = Med. Duty DODGE 2WD 7 = Med. Duty DODGE 4WD	55 = Wagon 140" 54 = Wagon 118" 52 = Wagon 140" 51 = Wagon 118" 12 = Van 140" 11 = Van 118" 06 = Front Section 158" 14 = Van 118" 15 = Van 140" 16 = Van 158" 56 = Wagon 158" 01 = Chassis Forward Control 118" 02 = Chassis Forward Control 140"	EX8 = Engine-2.7L I5 Mercedes Turbo Diesel	DGJ = Transmission-5-Spd. Automatic,W5A580

Steering Wheel and Related
Figure 19-110

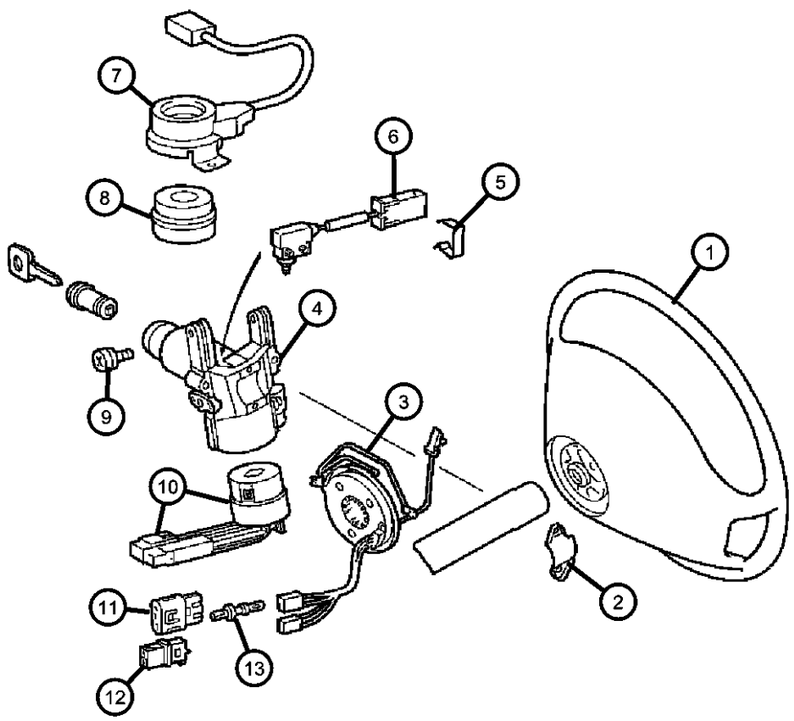

ITEM	PART NUMBER	QTY	LINE	SERIES	BODY	ENGINE	TRANS	TRIM	DESCRIPTION
		1	2, 6	L	11, 12, 14, 15, 16		DGJ		
		1	2, 6	L	51, 52, 54, 55, 56		DGJ		
		1	3, 7	L	02, 06		DGJ		
		1	3, 7	L	12, 15, 16		DGJ		
6									SWITCH
	05103857AA	1	2, 6	L	01, 02, 06		DGJ		
		1	2, 6	L	11, 12, 14, 15, 16		DGJ		
		1	2, 6	L	51, 52, 54, 55, 56		DGJ		
		1	3, 7	L	02, 06		DGJ		
		1	3, 7	L	12, 15, 16		DGJ		
7									TRANSPONDER, Steering Wheel
	05120812AA	1	3, 7	L	02, 06				
		1	3, 7	L	12, 15, 16				
		1	2, 6	L	01, 02, 06				
		1	2, 6	L	11, 12, 14, 15, 16				
		1	2, 6	L	51, 52, 54, 55, 56				
8									RING
	05104593AA	1	2, 6	L	01, 02, 06				
		1	2, 6	L	11, 12, 14, 15, 16				
		1	2, 6	L	51, 52, 54, 55, 56				
		1	3, 7	L	12, 15, 16				
		1	3, 7	L	02, 06				
9									SCREW, Cap
	05103652AA	2	2, 6	L	15, 16, 11, 12, 14				

SPRINTER (VA)

SERIES	LINE	BODY	ENGINE	TRANSMISSION
L = LOWLINE	3 = HD DODGE 2WD 6 = Lt. Duty DODGE 4WD 2 = Med. Duty DODGE 2WD 7 = Med. Duty DODGE 4WD	55 = Wagon 140" 54 = Wagon 118" 52 = Wagon 140" 51 = Wagon 118" 12 = Van 140" 11 = Van 118" 06 = Front Section 158" 14 = Van 118" 15 = Van 140" 16 = Van 158" 56 = Wagon 158" 01 = Chassis Forward Control 118" 02 = Chassis Forward Control 140"	EX8 = Engine-2.7L I5 Mercedes Turbo Diesel	DGJ = Transmission-5-Spd. Automatic,W5A580

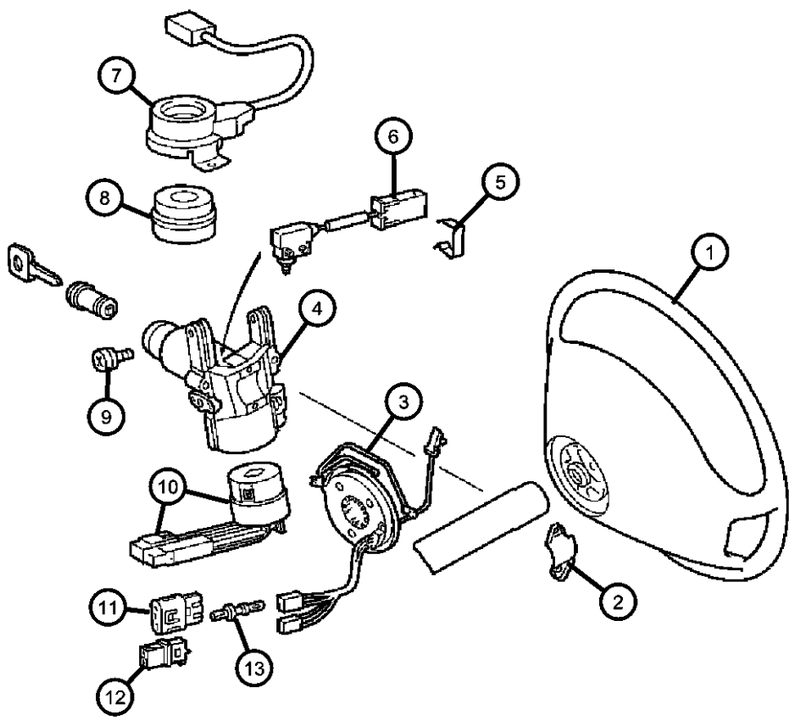

ITEM	PART NUMBER	QTY	LINE	SERIES	BODY	ENGINE	TRANS	TRIM	DESCRIPTION
		2	2, 6	L	51, 52, 54, 55, 56				
		2	3, 7	L	12, 15, 16				
		2	2, 6	L	01, 02, 06				
	05119538AA	2	3, 7	L	02, 06				
10									SWITCH, Ignition
	05103664AA	1	2, 6	L	11, 12, 14, 15, 16		DGJ		
		1	2, 6	L	51, 52, 54, 55, 56		DGJ		
		1	3, 7	L	02, 06		DGJ		
		1	3, 7	L	12, 15, 16		DGJ		
		1	2, 6	L	01, 02, 06		DGJ		
11									CONNECTOR
	05103904AA	1	2, 6	L	01, 02, 06				
		1	2, 6	L	11, 12, 14, 15, 16				
		1	2, 6	L	51, 52, 54, 55, 56				
		1	3, 7	L	02, 06				
		1	3, 7	L	12, 15, 16				
12									CONNECTOR
	05103902AA	1	2, 6	L	01, 02, 06				
		1	2, 6	L	14, 15, 16, 11, 12				
		1	2, 6	L	51, 52, 54, 55, 56				
		1	3, 7	L	02, 06				
		1	3, 7	L	12, 15, 16				
13									TERMINAL
	05103828AA	1	2, 6	L	01, 02, 06				

SPRINTER (VA)

SERIES	LINE	BODY	ENGINE	TRANSMISSION
L = LOWLINE	3 = HD DODGE 2WD 6 = Lt. Duty DODGE 4WD 2 = Med. Duty DODGE 2WD 7 = Med. Duty DODGE 4WD	55 = Wagon 140" 54 = Wagon 118" 52 = Wagon 140" 51 = Wagon 118" 12 = Van 140" 11 = Van 118" 06 = Front Section 158" 14 = Van 118" 15 = Van 140" 16 = Van 158" 56 = Wagon 158" 01 = Chassis Forward Control 118" 02 = Chassis Forward Control 140"	EX8 = Engine-2.7L I5 Mercedes Turbo Diesel	DGJ = Transmission-5-Spd. Automatic,W5A580

Steering Wheel and Related
Figure 19-110

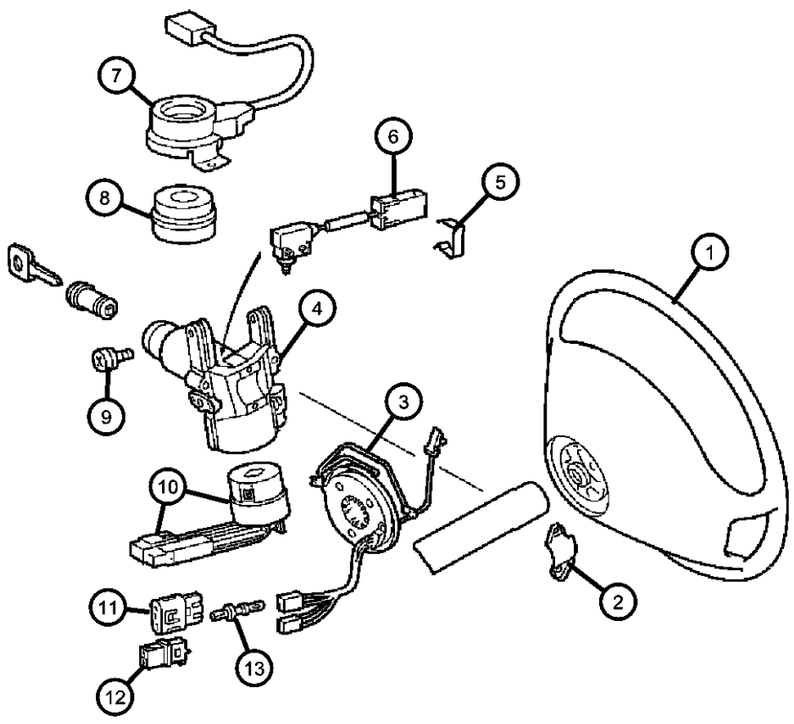

ITEM	PART NUMBER	QTY	LINE	SERIES	BODY	ENGINE	TRANS	TRIM	DESCRIPTION
		1	2, 6	L	11, 12, 14, 15, 16				
		1	2, 6	L	51, 52, 54, 55, 56				
		1	3, 7	L	02, 06				
		1	3, 7	L	12, 15, 16				
-14									CONTACT, Horn
	05119542AA	1	2, 6	L	01, 02, 06				
		1	2, 6	L	11, 12, 14, 15, 16				
		1	2, 6	L	51, 52, 54, 55, 56				
		1	3, 7	L	02, 06				
		1	3, 7	L	12, 15, 16				

SPRINTER (VA)

SERIES	LINE	BODY	ENGINE	TRANSMISSION
L = LOWLINE	3 = HD DODGE 2WD 6 = Lt. Duty DODGE 4WD 2 = Med. Duty DODGE 2WD 7 = Med. Duty DODGE 4WD	55 = Wagon 140" 54 = Wagon 118" 52 = Wagon 140" 51 = Wagon 118" 12 = Van 140" 11 = Van 118" 06 = Front Section 158" 14 = Van 118" 15 = Van 140" 16 = Van 158" 56 = Wagon 158" 01 = Chassis Forward Control 118" 02 = Chassis Forward Control 140"	EX8 = Engine-2.7L I5 Mercedes Turbo Diesel	DGJ = Transmission-5-Spd. Automatic,W5A580

Column Steering and Related
Figure 19-210

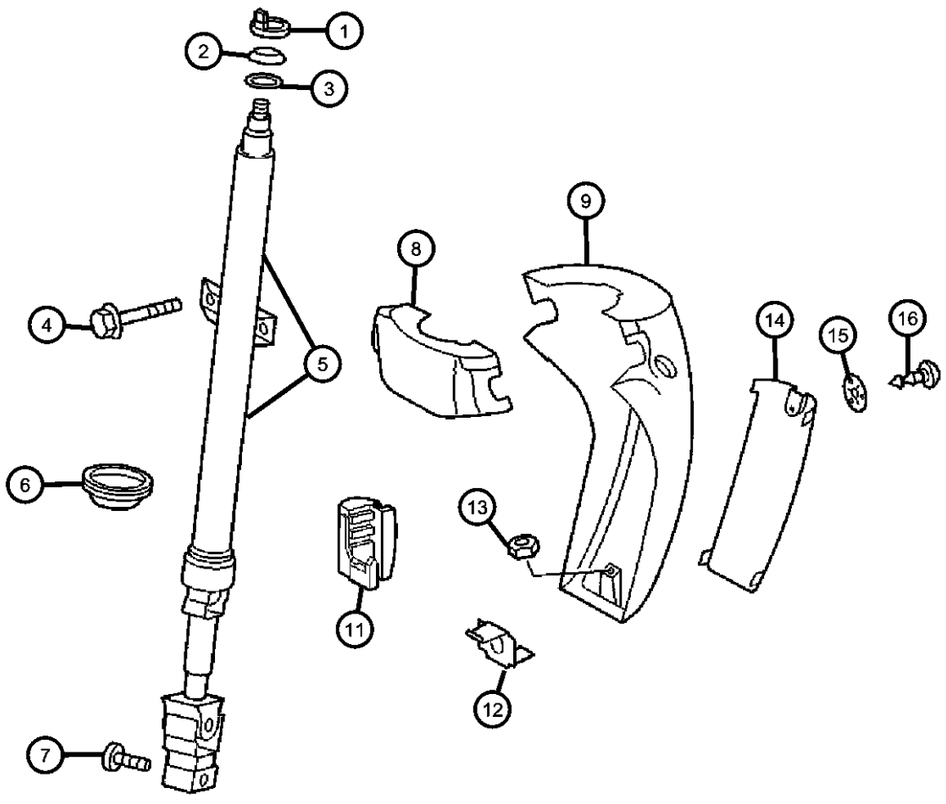

ITEM	PART NUMBER	QTY	LINE	SERIES	BODY	ENGINE	TRANS	TRIM	DESCRIPTION
Note; Sales Codes; [WCL] = 15 Inch Steel Wheels [WDG] = 16 Inch Steel Wheels									
1									SUPPORTING RING, NONE, SPRINTER
	05103651AA	1	2, 6	L	11, 12, 14, 15, 16				
		1	2, 6	L	51, 52, 54, 55, 56				
		1	3, 7	L	12, 15, 16				
2									SPACER
	05127709AA	1	2, 6	L	01, 02, 06				
		1	2, 6	L	11, 12, 14, 15, 16				
		1	2, 6	L	51, 52, 54, 55, 56				
		1	3, 7	L	02, 06				
		1	3, 7	L	12, 15, 16				
3									WASHER, Thrust
	05127708AA	1	2, 6	L	01, 02, 06				
		1	2, 6	L	11, 12, 14, 15, 16				
		1	2, 6	L	51, 52, 54, 55, 56				
		1	3, 7	L	02, 06				
		1	3, 7	L	12, 15, 16				
4									BOLT, Hex Head
	05126227AA	4	2, 6	L	01, 02, 06		DGJ		
		2	2, 6	L	11, 12, 14, 15, 16				
		2	2, 6	L	51, 52, 54, 55, 56				
		2	3, 7	L	02, 06				
		2	3, 7	L	12, 15, 16				

SPRINTER (VA)

SERIES	LINE	BODY	ENGINE	TRANSMISSION
L = LOWLINE	3 = HD DODGE 2WD 6 = Lt. Duty DODGE 4WD 2 = Med. Duty DODGE 2WD 7 = Med. Duty DODGE 4WD	55 = Wagon 140" 54 = Wagon 118" 52 = Wagon 140" 51 = Wagon 118" 12 = Van 140" 11 = Van 118" 06 = Front Section 158" 14 = Van 118" 15 = Van 140" 16 = Van 158" 56 = Wagon 158" 01 = Chassis Forward Control 118" 02 = Chassis Forward Control 140"	EX8 = Engine-2.7L I5 Mercedes Turbo Diesel	DGJ = Transmission-5-Spd. Automatic,W5A580

Column Steering and Related
Figure 19-210

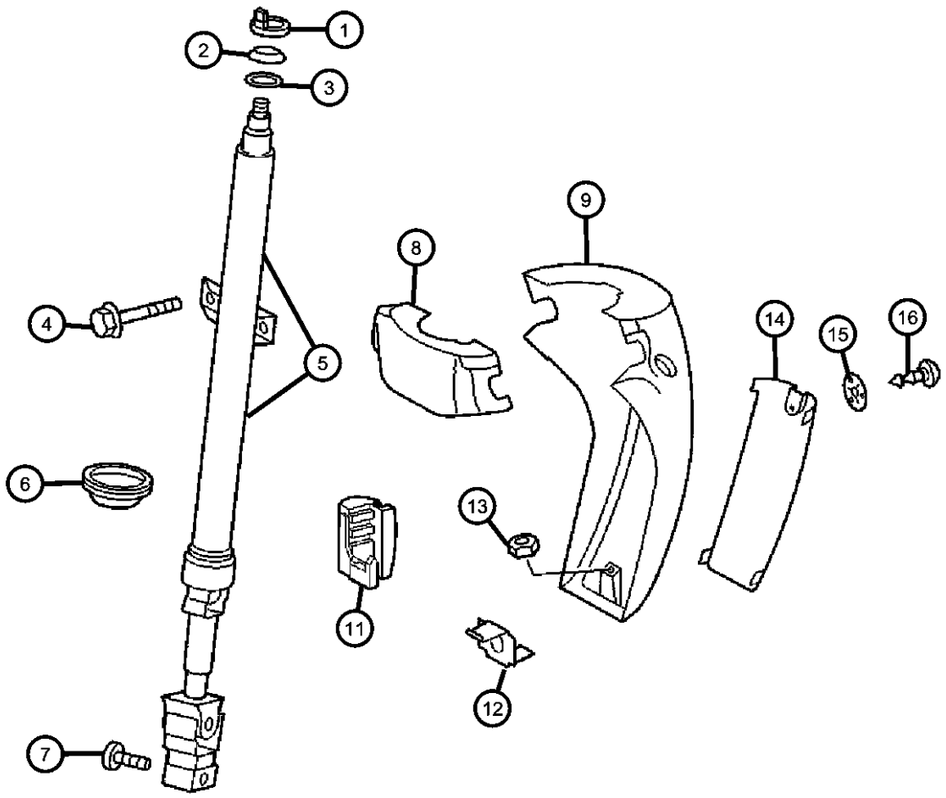

ITEM	PART NUMBER	QTY	LINE	SERIES	BODY	ENGINE	TRANS	TRIM	DESCRIPTION
5									COLUMN, Steering
	05129404AA	1	2, 6	L	02, 06				[WDG]
		1	2, 6	L	12, 15, 16				[WDG]
		1	2, 6	L	52, 55, 56				[WDG]
	05129396AA	1	2, 6	L	01				15" WHEELS ONLY
		1	2, 6	L	11, 14				15" WHEELS ONLY
		1	2, 6	L	51, 54				15" WHEELS ONLY
6									SEAL, Steering Gear
	05119536AA	1	2, 6	L	01, 02, 06				
		1	2, 6	L	11, 12, 14, 15, 16				
		1	2, 6	L	51, 52, 54, 55, 56				
		1	3, 7	L	02, 06				
		1	3, 7	L	12, 15, 16				
7									SCREW, Steering Column
	05125557AA	1	3, 7	L	02, 06				
		1	2, 6	L	01, 02, 06				
	05125707AA	1	2, 6	L	11, 12, 14, 15, 16				
		1	2, 6	L	51, 52, 54, 55, 56				
		1	3, 7	L	12, 15, 16				
8									SHROUD, Steering Column, Upper
	05119534AA	1	3, 7	L	02, 06				
		1	2, 6	L	01, 02, 06				
		1	2, 6	L	11, 12, 14, 15, 16				
		1	2, 6	L	51, 52, 54, 55, 56				
		1	3, 7	L	12, 15, 16				

SPRINTER (VA)

SERIES	LINE	BODY	ENGINE	TRANSMISSION
L = LOWLINE	3 = HD DODGE 2WD 6 = Lt. Duty DODGE 4WD 2 = Med. Duty DODGE 2WD 7 = Med. Duty DODGE 4WD	55 = Wagon 140" 54 = Wagon 118" 52 = Wagon 140" 51 = Wagon 118" 12 = Van 140" 11 = Van 118" 06 = Front Section 158" 14 = Van 118" 15 = Van 140" 16 = Van 158" 56 = Wagon 158" 01 = Chassis Forward Control 118" 02 = Chassis Forward Control 140"	EX8 = Engine-2.7L I5 Mercedes Turbo Diesel	DGJ = Transmission-5-Spd. Automatic,W5A580

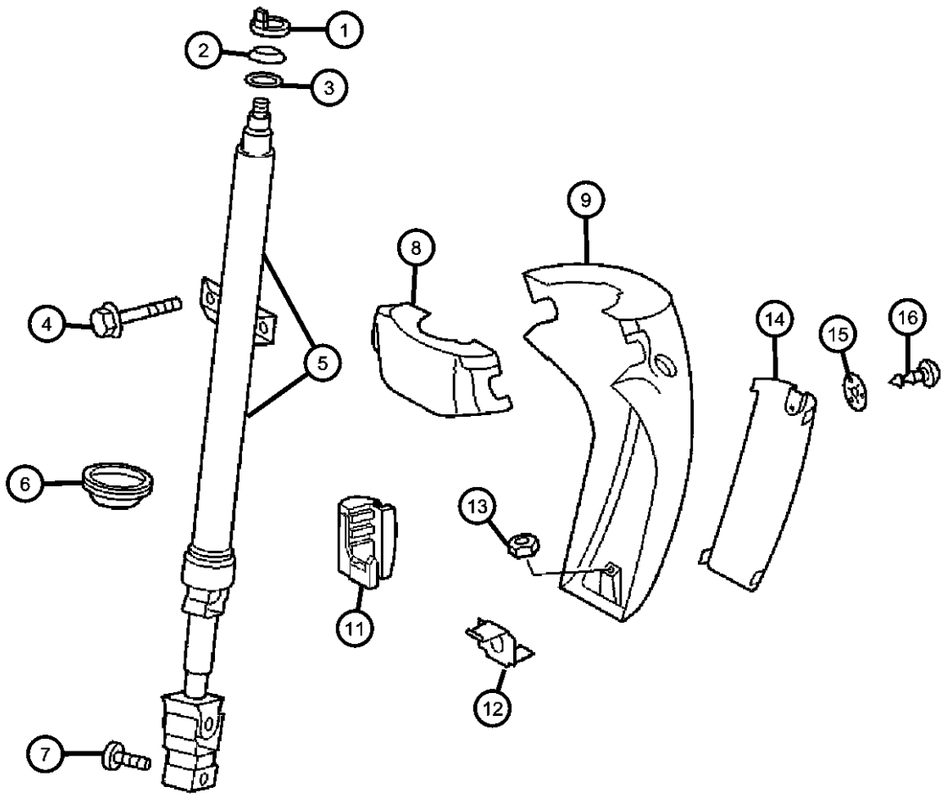

ITEM	PART NUMBER	QTY	LINE	SERIES	BODY	ENGINE	TRANS	TRIM	DESCRIPTION
9									SHROUD, Steering Column, Lower
	05119524AA	1	2, 6	L	01, 02, 06				
		1	2, 6	L	11, 12, 14, 15, 16				
		1	2, 6	L	51, 52, 54, 55, 56				
		1	3, 7	L	02, 06				
		1	3, 7	L	12, 15, 16				
-10									SCREW, Steering Column
	05126274AA	2	2, 6	L	01, 02, 06				
		2	2, 6	L	11, 12, 14, 15, 16				Shroud to Column
		2	2, 6	L	51, 52, 54, 55, 56				Shroud to Column
		2	3, 7	L	02, 06				
		2	3, 7	L	12, 15, 16				Shroud to Column
11									GROMMET, Steering Column Cover
	05122935AA	1	2, 6	L	01, 02, 06				
		1	2, 6	L	11, 12, 14, 15, 16				
		1	2, 6	L	51, 52, 54, 55, 56				
		1	3, 7	L	02, 06				
		1	3, 7	L	12, 15, 16				
12									CLIP, Steering Column
	05125568AA	1	2, 6	L	01, 02, 06				
		1	2, 6	L	11, 12, 14, 15, 16				
		1	2, 6	L	51, 52, 54, 55, 56				
		1	3, 7	L	02, 06				
		1	3, 7	L	12, 15, 16				

SPRINTER (VA)

SERIES	LINE	BODY	ENGINE	TRANSMISSION
L = LOWLINE	3 = HD DODGE 2WD 6 = Lt. Duty DODGE 4WD 2 = Med. Duty DODGE 2WD 7 = Med. Duty DODGE 4WD	55 = Wagon 140" 54 = Wagon 118" 52 = Wagon 140" 51 = Wagon 118" 12 = Van 140" 11 = Van 118" 06 = Front Section 158" 14 = Van 118" 15 = Van 140" 16 = Van 158" 56 = Wagon 158" 01 = Chassis Forward Control 118" 02 = Chassis Forward Control 140"	EX8 = Engine-2.7L I5 Mercedes Turbo Diesel	DGJ = Transmission-5-Spd. Automatic,W5A580

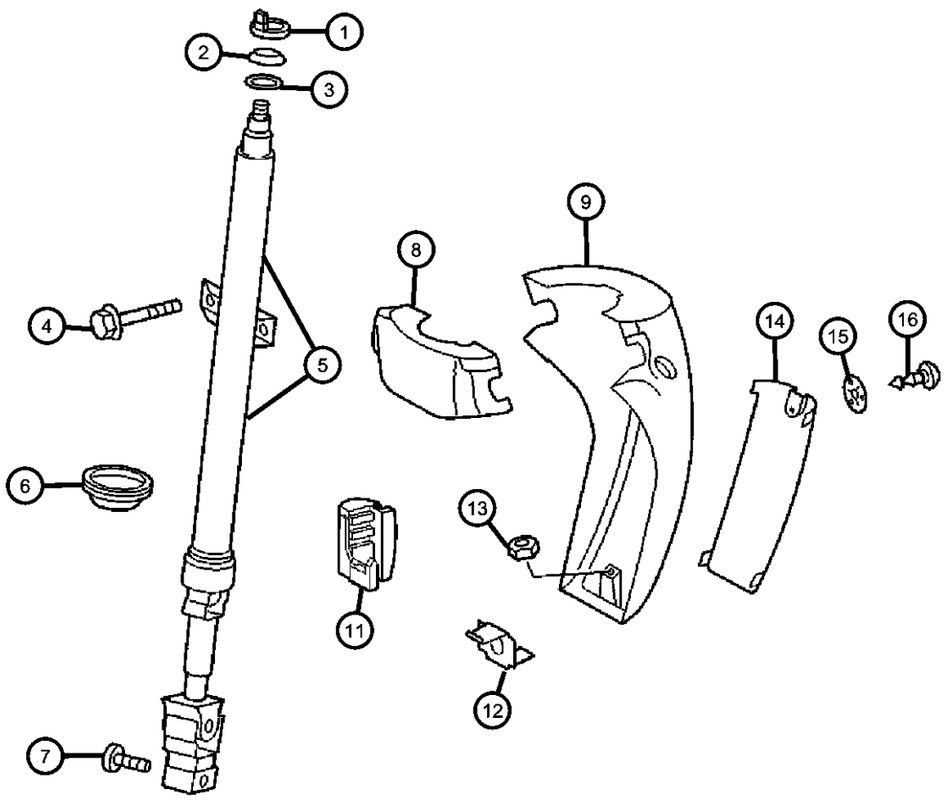

ITEM	PART NUMBER	QTY	LINE	SERIES	BODY	ENGINE	TRANS	TRIM	DESCRIPTION
13	05127449AA	1		L					NUT, Hex, M6
14									COVER, Steering Column Opening
	05119525AA	1	2, 6	L	01, 02, 06				
		1	2, 6	L	11, 12, 14, 15, 16				
		1	2, 6	L	51, 52, 54, 55, 56				
		1	3, 7	L	02, 06				
		1	3, 7	L	12, 15, 16				
15									WASHER, Steering Column
	05125751AA	1	2, 6	L	01, 02, 06				
		1	3, 7	L	12, 15, 16				
		1	2, 6	L	11, 12, 14, 15, 16				
		1	2, 6	L	51, 52, 54, 55, 56				
		1	3, 7	L	02, 06				
16									SCREW, Steering Column
	05125557AA	1	3, 7	L	02, 06				
		1	2, 6	L	01, 02, 06				
		1	2, 6	L	11, 12, 14, 15, 16				
		1	2, 6	L	51, 52, 54, 55, 56				
		1	3, 7	L	12, 15, 16				

SPRINTER (VA)

SERIES	LINE	BODY	ENGINE	TRANSMISSION
L = LOWLINE	3 = HD DODGE 2WD 6 = Lt. Duty DODGE 4WD 2 = Med. Duty DODGE 2WD 7 = Med. Duty DODGE 4WD	55 = Wagon 140" 54 = Wagon 118" 52 = Wagon 140" 51 = Wagon 118" 12 = Van 140" 11 = Van 118" 06 = Front Section 158" 14 = Van 118" 15 = Van 140" 16 = Van 158" 56 = Wagon 158" 01 = Chassis Forward Control 118" 02 = Chassis Forward Control 140"	EX8 = Engine-2.7L I5 Mercedes Turbo Diesel	DGJ = Transmission-5-Spd. Automatic,W5A580

Gear - Steering
Figure 19-310

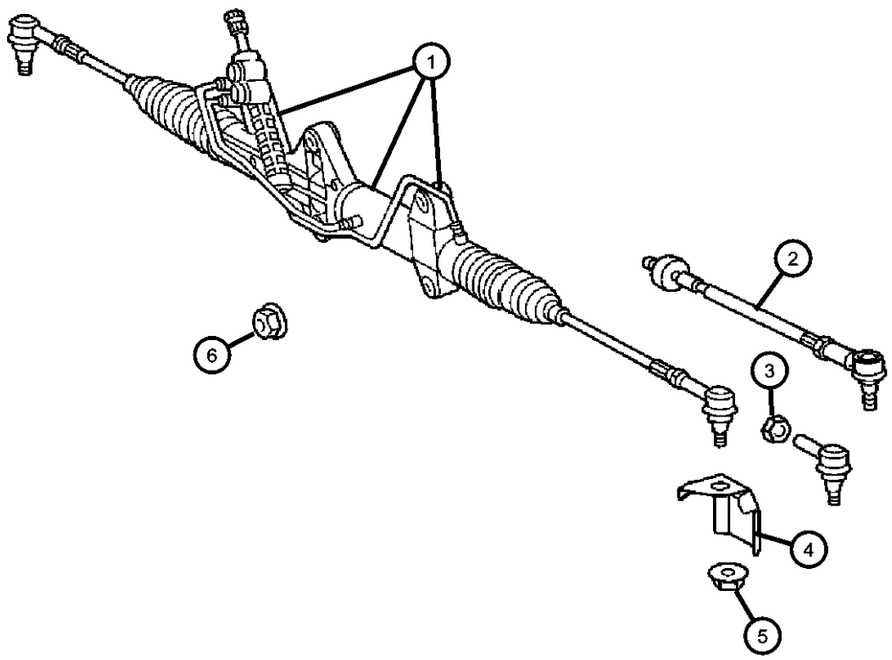

ITEM	PART NUMBER	QTY	LINE	SERIES	BODY	ENGINE	TRANS	TRIM	DESCRIPTION
Note; Sales Codes; [WCL] = 15 inch Steel Wheels [WDG] = 16 Inch Steel Wheels									
1									GEAR, Power Steering
	05104094AA	1	2, 6	L	01, 02, 06				15 WHEELS
		1	2, 6	L	11, 12, 14, 15, 16				15 WHEELS
		1	2, 6	L	51, 52, 54, 55, 56				15 WHEELS
	05104585AA	1	2, 6	L	01, 02, 06				16 WHEELS
		1	2, 6	L	11, 12, 14, 15, 16				16 WHEELS
		1	2, 6	L	51, 52, 54, 55, 56				16 WHEELS
		1	3, 7	L	02, 06				16 WHEELS
		1	3, 7	L	12, 15, 16				16 WHEELS
2									END, Tie Rod
	05104091AA	2	3, 7	L	02, 06				
		2	3, 7	L	12, 15, 16				
		2	2, 6	L	01, 02, 06				
		2	2, 6	L	11, 12, 14, 15, 16				
		2	2, 6	L	51, 52, 54, 55, 56				
3									JAM NUT, Outer Tie Rod
	05133906AA	2	2, 6	L	01, 02, 06				
		2	2, 6	L	11, 12, 14, 15, 16				
		2	2, 6	L	51, 52, 54, 55, 56				
		2	3, 7	L	02, 06				
		2	3, 7	L	12, 15, 16				
4									PLATE, Backing
	05119249AA	2	2, 6	L	01, 02, 06				

SPRINTER (VA)

SERIES	LINE	BODY	ENGINE	TRANSMISSION
L = LOWLINE	3 = HD DODGE 2WD 6 = Lt. Duty DODGE 4WD 2 = Med. Duty DODGE 2WD 7 = Med. Duty DODGE 4WD	55 = Wagon 140" 54 = Wagon 118" 52 = Wagon 140" 51 = Wagon 118" 12 = Van 140" 11 = Van 118" 06 = Front Section 158" 14 = Van 118" 15 = Van 140" 16 = Van 158" 56 = Wagon 158" 01 = Chassis Forward Control 118" 02 = Chassis Forward Control 140"	EX8 = Engine-2.7L I5 Mercedes Turbo Diesel	DGJ = Transmission-5-Spd. Automatic,W5A580

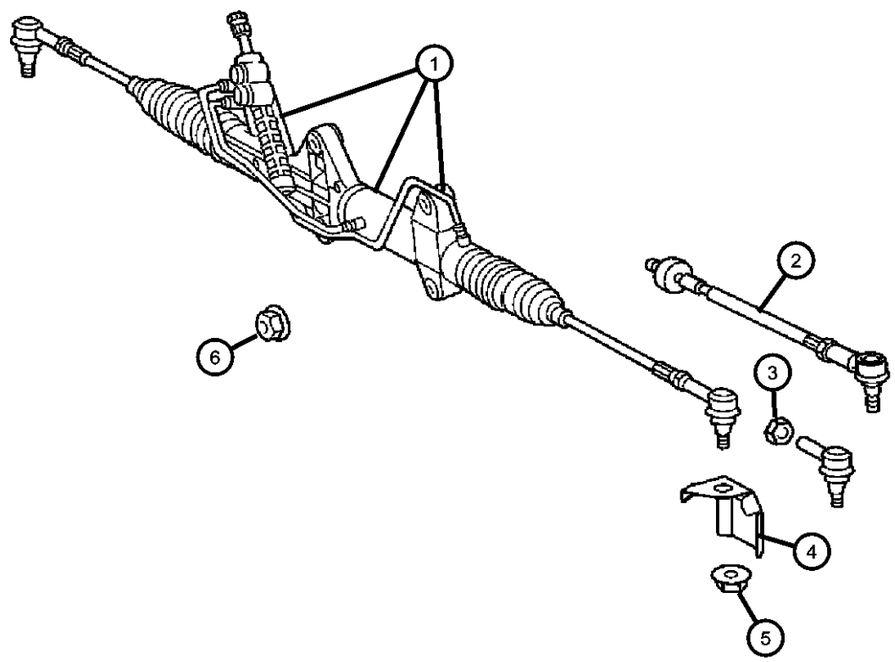

ITEM	PART NUMBER	QTY	LINE	SERIES	BODY	ENGINE	TRANS	TRIM	DESCRIPTION
		2	2, 6	L	11, 12, 14, 15, 16				
		2	2, 6	L	51, 52, 54, 55, 56				
5									NUT
	05125761AA	2	2, 6	L	01, 02, 06				
		2	2, 6	L	11, 12, 14, 15, 16				
		2	2, 6	L	51, 52, 54, 55, 56				
6									NUT
	06104717AA	4	2, 6	L	11, 12, 14, 15, 16				
		4	2, 6	L	51, 52, 54, 55, 56				
		2	2, 6	L	01, 02, 06				
		2	2, 6	L	11, 12, 14, 15, 16				
		2	2, 6	L	51, 52, 54, 55, 56				
		2	3, 7	L	02, 06				
		2	3, 7	L	12, 15, 16				

SPRINTER (VA)

SERIES	LINE	BODY	ENGINE	TRANSMISSION
L = LOWLINE	3 = HD DODGE 2WD 6 = Lt. Duty DODGE 4WD 2 = Med. Duty DODGE 2WD 7 = Med. Duty DODGE 4WD	55 = Wagon 140" 54 = Wagon 118" 52 = Wagon 140" 51 = Wagon 118" 12 = Van 140" 11 = Van 118" 06 = Front Section 158" 14 = Van 118" 15 = Van 140" 16 = Van 158" 56 = Wagon 158" 01 = Chassis Forward Control 118" 02 = Chassis Forward Control 140"	EX8 = Engine-2.7L I5 Mercedes Turbo Diesel	DGJ = Transmission-5-Spd. Automatic,W5A580

Pump and Pulley, Steering
Figure 19-510

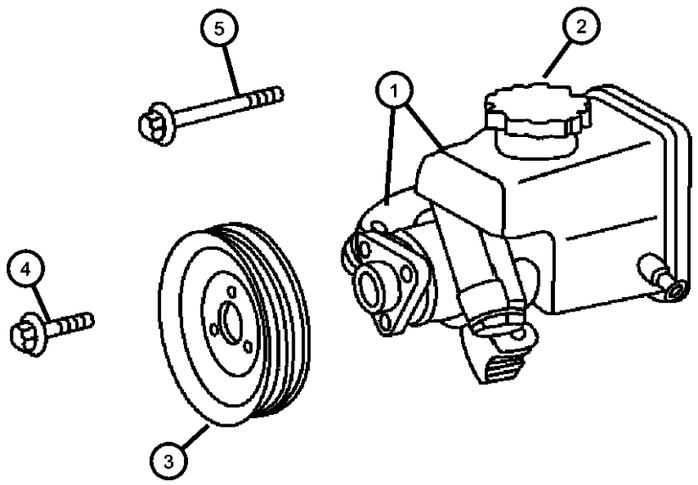

ITEM	PART NUMBER	QTY	LINE	SERIES	BODY	ENGINE	TRANS	TRIM	DESCRIPTION
Note; Sales Codes; [EX8] = 2.7L I5 MERCEDES-BENZ									
1	05103795AA	1		L		EX9			PUMP, Power Steering
	05013457AA								Mopar Power Steering Fluid Quart
2	05139279AA	1							CAP, Power Steering Reservoir
3	05117692AA	1		L		EX9			PULLEY, Power Steering Pump
4	05133207AA	3		L					BOLT, Hex Head
5	05073718AA	1		L		EX9			SCREW

SPRINTER (VA)

SERIES	LINE	BODY	ENGINE	TRANSMISSION
L = LOWLINE	3 = HD DODGE 2WD 6 = Lt. Duty DODGE 4WD 2 = Med. Duty DODGE 2WD 7 = Med. Duty DODGE 4WD	55 = Wagon 140" 54 = Wagon 118" 52 = Wagon 140" 51 = Wagon 118" 12 = Van 140" 11 = Van 118" 06 = Front Section 158" 14 = Van 118" 15 = Van 140" 16 = Van 158" 56 = Wagon 158" 01 = Chassis Forward Control 118" 02 = Chassis Forward Control 140"	EX8 = Engine-2.7L I5 Mercedes Turbo Diesel	DGJ = Transmission-5-Spd. Automatic,W5A580

Hoses Steering and Related
Figure 19-710

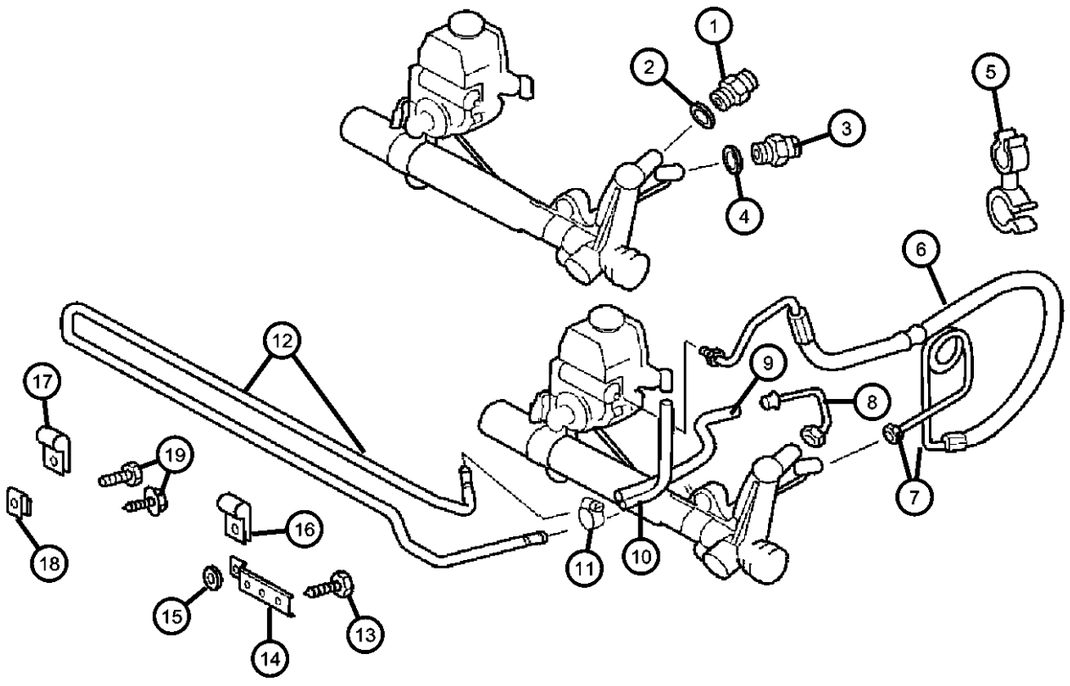

ITEM	PART NUMBER	QTY	LINE	SERIES	BODY	ENGINE	TRANS	TRIM	DESCRIPTION
Note; Sales Codes; [EX8] = 2.7L I5 MERCEDES-BENZ									
1									FITTING, RETURN LINE TO STEERING, SPRINTER
	05104540AA	1	3, 7	L	12, 15, 16				
		1	2, 6	L	11, 12, 14, 15, 16				
		1	2, 6	L	56, 51, 52, 54, 55				
2									SEAL
	05104626AA	1	2, 6	L	01, 02, 06				
		1	2, 6	L	11, 12, 14, 15, 16				
		1	2, 6	L	51, 52, 54, 55, 56				
		1	3, 7	L	02, 06				
		1	3, 7	L	12, 15, 16				
3									FITTING, HOSE TO STEERING, SPRINTER
	05104025AA	1	2, 6	L	11, 12, 14, 15, 16				
		1	2, 6	L	51, 52, 54, 55, 56				
		1	3, 7	L	12, 15, 16				
4									SEAL
	05102646AA	1	2, 6	L	01, 02, 06				
		1	2, 6	L	11, 12, 14, 15, 16				
		1	2, 6	L	51, 52, 54, 55, 56				
		1	3, 7	L	02, 06				
		1	3, 7	L	12, 15, 16				
5									CLAMP, Brake Hose
	05125887AA	1	3, 7	L	02, 06				

SPRINTER (VA)

SERIES	LINE	BODY	ENGINE	TRANSMISSION
L = LOWLINE	3 = HD DODGE 2WD 6 = Lt. Duty DODGE 4WD 2 = Med. Duty DODGE 2WD 7 = Med. Duty DODGE 4WD	55 = Wagon 140" 54 = Wagon 118" 52 = Wagon 140" 51 = Wagon 118" 12 = Van 140" 11 = Van 118" 06 = Front Section 158" 14 = Van 118" 15 = Van 140" 16 = Van 158" 56 = Wagon 158" 01 = Chassis Forward Control 118" 02 = Chassis Forward Control 140"	EX8 = Engine-2.7L I5 Mercedes Turbo Diesel	DGJ = Transmission-5-Spd. Automatic,W5A580

Hoses Steering and Related
Figure 19-710

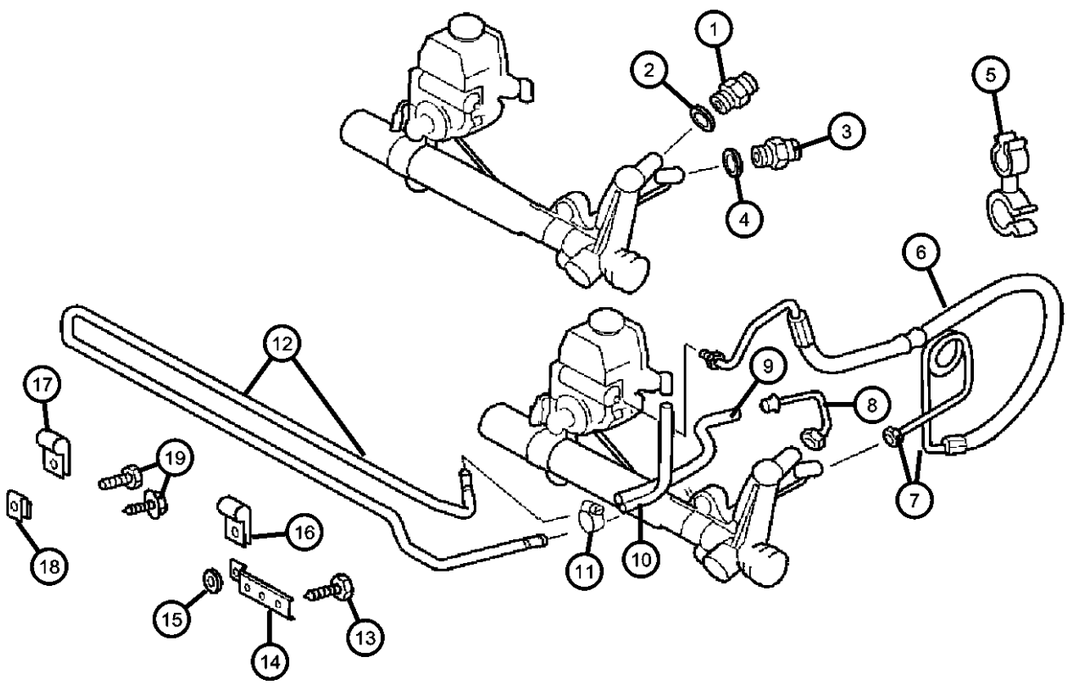

ITEM	PART NUMBER	QTY	LINE	SERIES	BODY	ENGINE	TRANS	TRIM	DESCRIPTION
		1	3, 7	L	12, 15, 16				
	05125887AB	1	2, 6	L	01, 02, 06				
		1	2, 6	L	11, 12, 14, 15, 16				
		1	2, 6	L	51, 52, 54, 55, 56				
6									HOSE, Power Steering Pressure
	05119564AA	1	2, 6	L	01, 02, 06				
		1	2, 6	L	11, 12, 14, 15, 16				
		1	2, 6	L	51, 52, 54, 55, 56				
		1	3, 7	L	02, 06				
		1	3, 7	L	12, 15, 16				
7									HOSE, Power Steering Return
	05119563AA	1	2, 6	L	01, 02, 06				
		1	2, 6	L	11, 12, 14, 15, 16				
		1	2, 6	L	51, 52, 54, 55, 56				
		1	3, 7	L	02, 06				
		1	3, 7	L	12, 15, 16				
8									LINE, Power Steering Return
	05104093AA	1	2, 6	L	01, 02, 06				
		1	2, 6	L	11, 12, 14, 15, 16				
		1	2, 6	L	51, 52, 54, 55, 56				
		1	3, 7	L	02, 06				
		1	3, 7	L	12, 15, 16				
9									HOSE
	05133784AA	100	2, 6	L	01, 02, 06				5 Meters Long

SPRINTER (VA)

SERIES	LINE	BODY	ENGINE	TRANSMISSION
L = LOWLINE	3 = HD DODGE 2WD 6 = Lt. Duty DODGE 4WD 2 = Med. Duty DODGE 2WD 7 = Med. Duty DODGE 4WD	55 = Wagon 140" 54 = Wagon 118" 52 = Wagon 140" 51 = Wagon 118" 12 = Van 140" 11 = Van 118" 06 = Front Section 158" 14 = Van 118" 15 = Van 140" 16 = Van 158" 56 = Wagon 158" 01 = Chassis Forward Control 118" 02 = Chassis Forward Control 140"	EX8 = Engine-2.7L I5 Mercedes Turbo Diesel	DGJ = Transmission-5-Spd. Automatic,W5A580

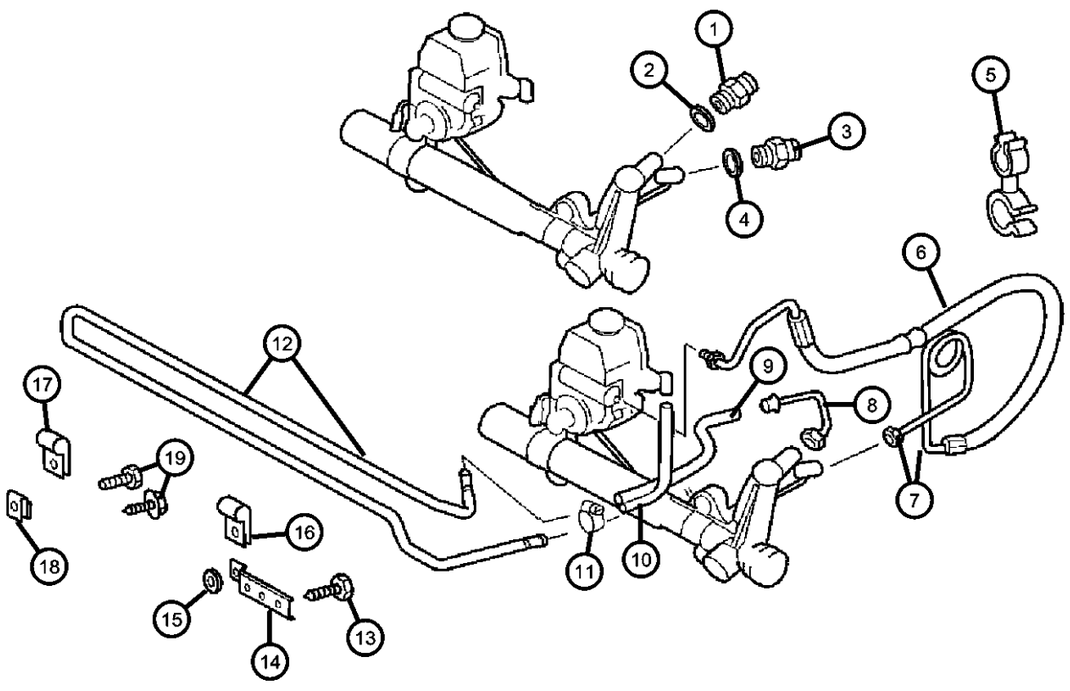

ITEM	PART NUMBER	QTY	LINE	SERIES	BODY	ENGINE	TRANS	TRIM	DESCRIPTION
		100	2, 6	L	11, 12, 14, 15, 16				5 Meters Long
		100	2, 6	L	51, 52, 54, 55, 56				5 Meters Long
		100	3, 7	L	02, 06				5 Meters Long
		100	3, 7	L	12, 15, 16				5 Meters Long
10									HOSE, Power Steering Return
	05119563AA	1	2, 6	L	51, 52, 54, 55, 56				
		1	3, 7	L	02, 06				
		1	3, 7	L	12, 15, 16				
		1	2, 6	L	01, 02, 06				
		1	2, 6	L	11, 12, 14, 15, 16				
11									CLAMP, Brake Hose
	05096431AA	2	2, 6	L	01, 02, 06				
		2	2, 6	L	11, 12, 14, 15, 16				
		2	2, 6	L	51, 52, 54, 55, 56				
		2	3, 7	L	02, 06				
		2	3, 7	L	12, 15, 16				
12									TUBE
	05104098AA	1	2, 6	L	01, 02, 06				
		1	2, 6	L	11, 12, 14, 15, 16				
		1	2, 6	L	51, 52, 54, 55, 56				
		1	3, 7	L	02, 06				
		1	3, 7	L	12, 15, 16				
13									SCREW, Tapping
	06104574AA	6	3, 7	L	02, 06	EX9			

SPRINTER (VA)

SERIES	LINE	BODY	ENGINE	TRANSMISSION
L = LOWLINE	3 = HD DODGE 2WD 6 = Lt. Duty DODGE 4WD 2 = Med. Duty DODGE 2WD 7 = Med. Duty DODGE 4WD	55 = Wagon 140" 54 = Wagon 118" 52 = Wagon 140" 51 = Wagon 118" 12 = Van 140" 11 = Van 118" 06 = Front Section 158" 14 = Van 118" 15 = Van 140" 16 = Van 158" 56 = Wagon 158" 01 = Chassis Forward Control 118" 02 = Chassis Forward Control 140"	EX8 = Engine-2.7L I5 Mercedes Turbo Diesel	DGJ = Transmission-5-Spd. Automatic,W5A580

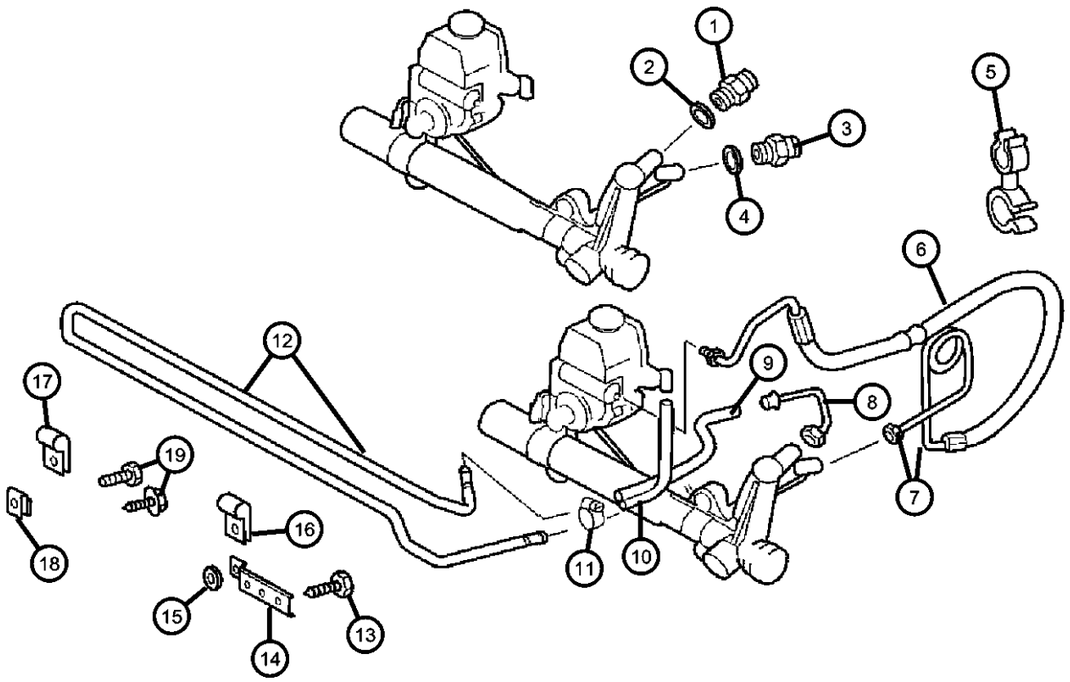

ITEM	PART NUMBER	QTY	LINE	SERIES	BODY	ENGINE	TRANS	TRIM	DESCRIPTION
		6	2, 6	L	01, 02, 06	EX9			
		6	2, 6	L	11, 12, 14, 15, 16	EX9			
		6	2, 6	L	51, 52, 54, 55, 56	EX9			
		6	3, 7	L	12, 15, 16	EX9			
14									BRACKET, Mounting
	05119556AA	2	2, 6	L	01, 02, 06	EX9			
		2	2, 6	L	11, 12, 14, 15, 16	EX9			
		2	2, 6	L	51, 52, 54, 55, 56	EX9			
		2	3, 7	L	02, 06	EX9			
		2	3, 7	L	12, 15, 16	EX9			
15									WASHER
	05104638AA	2	3, 7	L	12, 15, 16	EX9			
		2	3, 7	L	02, 06	EX9			
		2	2, 6	L	11, 12, 14, 15, 16				
		2	2, 6	L	51, 52, 54, 55, 56				
16									CLAMP
	05126283AA	4	2, 6	L	01, 02, 06	EX9			
		4	2, 6	L	11, 12, 14, 15, 16	EX9			
		4	2, 6	L	51, 52, 54, 55, 56	EX9			
		4	3, 7	L	02, 06	EX9			
		4	3, 7	L	12, 15, 16	EX9			
17									CLAMP
	05132910AA	2	2, 6	L	01, 02, 06				
		2	2, 6	L	11, 12, 14, 15, 16				

SPRINTER (VA)

SERIES	LINE	BODY	ENGINE	TRANSMISSION
L = LOWLINE	3 = HD DODGE 2WD 6 = Lt. Duty DODGE 4WD 2 = Med. Duty DODGE 2WD 7 = Med. Duty DODGE 4WD	55 = Wagon 140" 54 = Wagon 118" 52 = Wagon 140" 51 = Wagon 118" 12 = Van 140" 11 = Van 118" 06 = Front Section 158" 14 = Van 118" 15 = Van 140" 16 = Van 158" 56 = Wagon 158" 01 = Chassis Forward Control 118" 02 = Chassis Forward Control 140"	EX8 = Engine-2.7L I5 Mercedes Turbo Diesel	DGJ = Transmission-5-Spd. Automatic,W5A580

Hoses Steering and Related
Figure 19-710

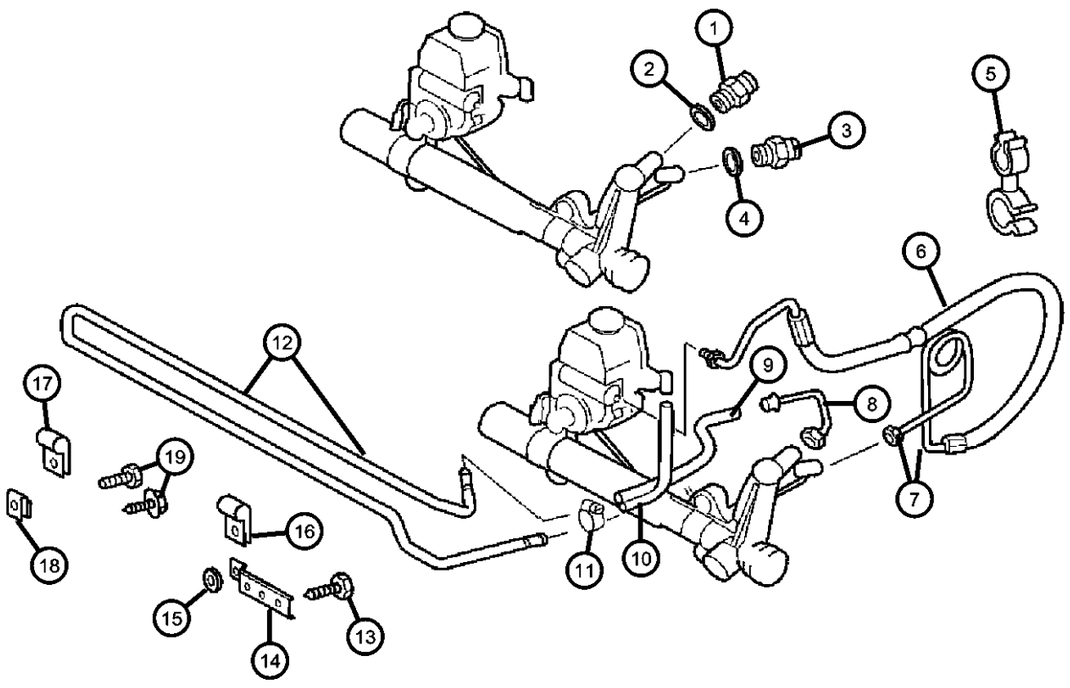

ITEM	PART NUMBER	QTY	LINE	SERIES	BODY	ENGINE	TRANS	TRIM	DESCRIPTION
		2	2, 6	L	51, 52, 54, 55, 56				
18	05103733AA	1	3, 7	L	12, 15, 16				NUT RETAINER, NONE, SPRINTER
19	05103733AA	1							SCREW, (NOT SERVICED)

SPRINTER (VA)

SERIES	LINE	BODY	ENGINE	TRANSMISSION
L = LOWLINE	3 = HD DODGE 2WD 6 = Lt. Duty DODGE 4WD 2 = Med. Duty DODGE 2WD 7 = Med. Duty DODGE 4WD	55 = Wagon 140" 54 = Wagon 118" 52 = Wagon 140" 51 = Wagon 118" 12 = Van 140" 11 = Van 118" 06 = Front Section 158" 14 = Van 118" 15 = Van 140" 16 = Van 158" 56 = Wagon 158" 01 = Chassis Forward Control 118" 02 = Chassis Forward Control 140"	EX8 = Engine-2.7L I5 Mercedes Turbo Diesel	DGJ = Transmission-5-Spd. Automatic,W5A580

Group - NAG1

Automatic Transmission 5 Speed [DGJ]

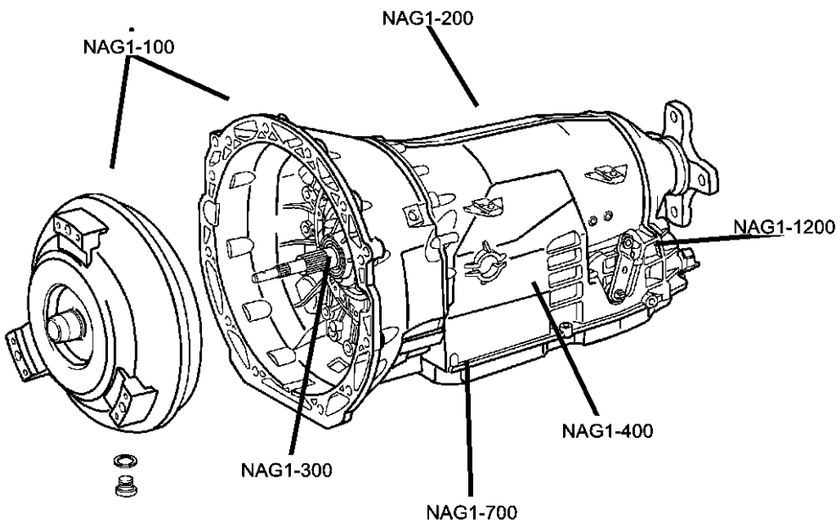

NAG1-100 Transmission Assembly 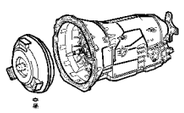	**NAG1-1200** Gearshift Controls 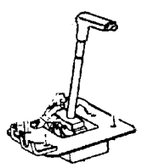	**NAG1-200** Case and Extension 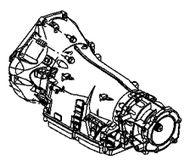	**NAG1-300** Oil Pump 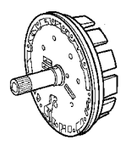
NAG1-400 Gear Train 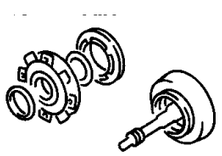	**NAG1-700** Valve Body 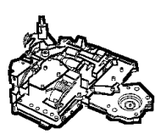		

Group - NAG1 Automatic Transmission 5 Speed [DGJ]

Illustration Title — Group-Fig. No.

Transmission Assembly
Automatic Transmission ..... Fig. NAG1 - 110

Case and Extension
Case and Related Parts ..... Fig. NAG1 - 210

Oil Pump
Pump, Oil ..... Fig. NAG1 - 310

Gear Train
Laminated Brake and Front Support - [B1] ..... Fig. NAG1 - 410
Gear Train, Front Planetary Clutch - [K-1] ..... Fig. NAG1 - 420
Carrier, Planetary - [K1] - [VPLS] ..... Fig. NAG1 - 430
Clutch - Output Shaft - [K2] ..... Fig. NAG1 - 440
Center & Rear Planetary Set - Output Shaft - [MPLS/HPLS] ..... Fig. NAG1 - 450
Clutch - [K3] ..... Fig. NAG1 - 460
Multiple Disc Brake - [B2 & B3] ..... Fig. NAG1 - 470
Multiple Disc Brake - [B2 & B3] ..... Fig. NAG1 - 480
Multiple Disc Brake - [B2 & B3] ..... Fig. NAG1 - 490

Valve Body
Electronic - Hydraulic Control ..... Fig. NAG1 - 710

Gearshift Controls
Gear Shift Control ..... Fig. NAG1 - 1210

Automatic Transmission
Figure NAG1-110

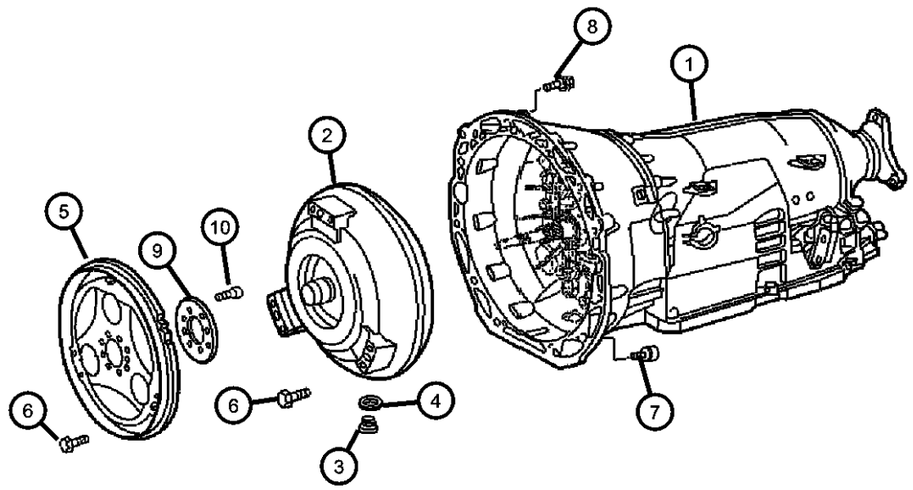

ITEM	PART NUMBER	QTY	LINE	SERIES	BODY	ENGINE	TRANS	TRIM	DESCRIPTION
NOTE:Transmission Assembly Does Not Include Torque Converter. Torque Converter Serviced Separately.									
Sales Codes:									
[DGJ]=5 Speed Automatic Transmission - [NAG1] - [W5A380]									
1	05104552AA	1		L					TRANSMISSION, Automatic
	05127382AA								Mopar Automatic Transmission Fluid Quart
	R5104552AA								Mopar Remanufactured Part
2	05104567AA	1		L			DGJ		CONVERTER, Torque
3	05080398AB	1		L			DGJ		PLUG
4	05080014AA	1		L			DGJ		O RING
5	05137274AA	1		L		EX8			FLEX PLATE
6									SCREW
	06507095AA	6	2, 6	L			DGJ		
		6	3, 7	L			DGJ		
7									SCREW
	06104047AA	2	2, 6	L			DGJ		
		2	3, 7	L			DGJ		
8									SCREW
	06104218AA	6	2, 6	L			DGJ		
		6	3, 7	L			DGJ		
9	05080066AA	1				EX8	DGJ		WASHER
10									SCREW
	06104218AA	6	2, 6	L			DGJ		
		6	3, 7	L			DGJ		

SPRINTER (VA)

SERIES	LINE	BODY	ENGINE	TRANSMISSION
L = LOWLINE	3 = HD DODGE 2WD 6 = Lt. Duty DODGE 4WD 2 = Med. Duty DODGE 2WD 7 = Med. Duty DODGE 4WD	55 = Wagon 140" 54 = Wagon 118" 52 = Wagon 140" 51 = Wagon 118" 12 = Van 140" 11 = Van 118" 06 = Front Section 158" 14 = Van 118" 15 = Van 140" 16 = Van 158" 56 = Wagon 158" 01 = Chassis Forward Control 118" 02 = Chassis Forward Control 140"	EX8 = Engine-2.7L I5 Mercedes Turbo Diesel	DGJ = Transmission-5-Spd. Automatic,W5A580

Case and Related Parts
Figure NAG1-210

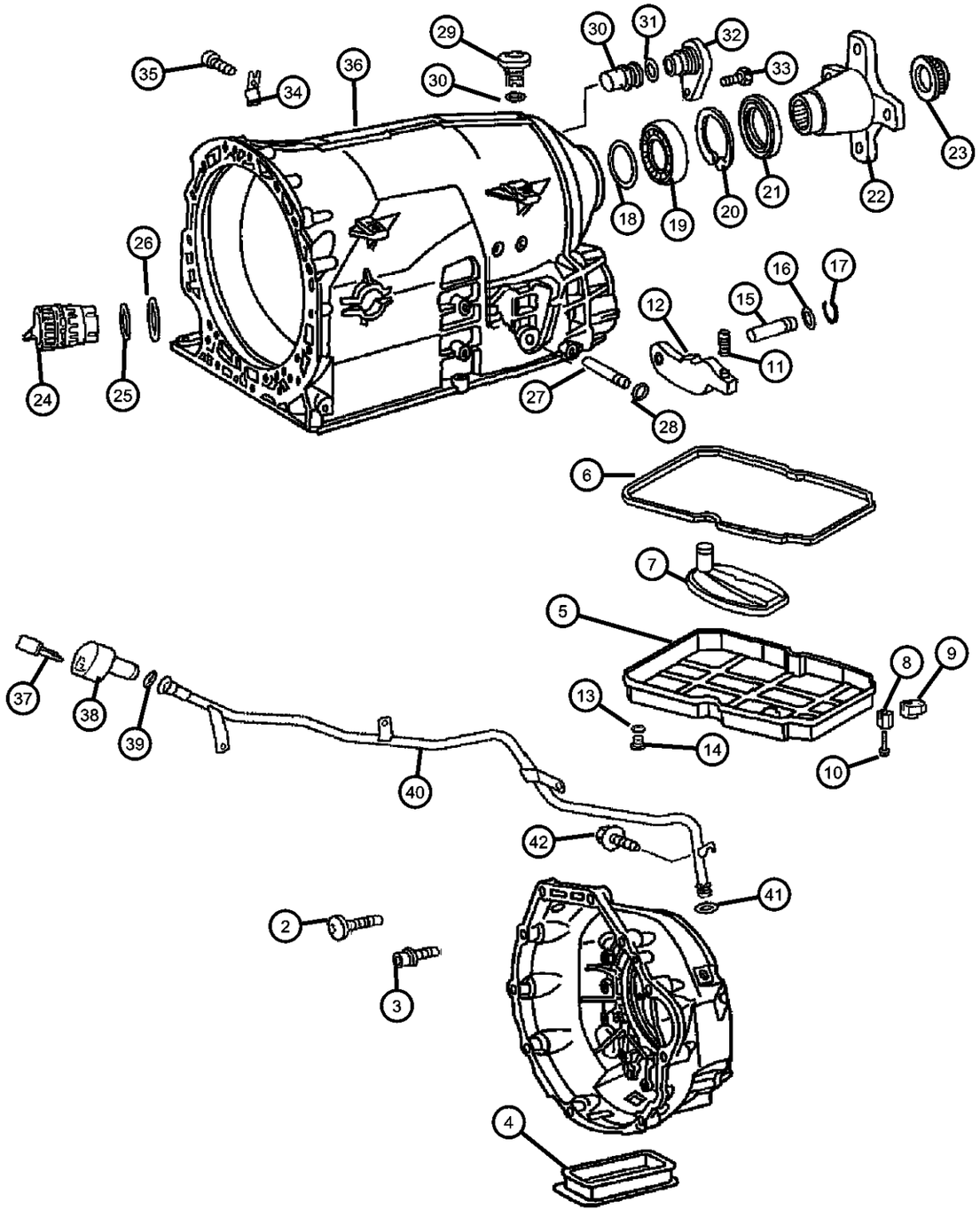

ITEM	PART NUMBER	QTY	LINE	SERIES	BODY	ENGINE	TRANS	TRIM	DESCRIPTION
NOTE:Sales Codes:									
[DGJ]=5 Speed Automatic Transmission - [NAG1] - [W5A380]									
-1	05080067AA	1		L			DGJ		GASKET PACKAGE, Transmission
2	52108396AA	2		L			DGJ		SCREW
3	52107934AA	11		L			DGJ		SCREW
4	05073886AA	2		L			DGJ		GASKET
5	52108326AA	1		L			DGJ		PAN, Transmission Oil
6	52108332AA	1		L			DGJ		GASKET
7	52108325AA	1		L			DGJ		FILTER, Transmission Oil
8	52108334AA	5		L			DGJ		NUT
9	05080289AA	1		L			DGJ		NUT
10	52108270AA	6		L			DGJ		SCREW
11	52108154AA	1		L			DGJ		PAWL, Parking Sprag
12	52108157AA	1		L			DGJ		SPRING
13	52108330AA	1		L			DGJ		SEAL, Transmission
14	52108331AA	1		L			DGJ		MAGNET
15	52108155AA	1		L			DGJ		PIN
16	52108160AA	1		L			DGJ		SEAL, Transmission
17	52107975AA	1		L			DGJ		SNAP RING
18									SPACER
	52108220AA	1		L					[0.3 MM]
	52108230AA	1		L					[0.2 MM]
	52108231AA	1		L					[0.4 MM]
	52108232AA	1		L					[0.5 MM]
19	52108207AA	1		L					BEARING, Ball
20	52108210AA	1		L					LOCK, Mounting
21	52108428AA	1		L			DGJ		SEAL, Transmission
22	05117859AA	1		L			DGJ		FLANGE, Drive Shaft
23	52108234AA	1		L			DGJ		NUT

SPRINTER (VA)

SERIES	LINE	BODY	ENGINE	TRANSMISSION
L = LOWLINE	3 = HD DODGE 2WD 6 = Lt. Duty DODGE 4WD 2 = Med. Duty DODGE 2WD 7 = Med. Duty DODGE 4WD	55 = Wagon 140" 54 = Wagon 118" 52 = Wagon 140" 51 = Wagon 118" 12 = Van 140" 11 = Van 118" 06 = Front Section 158" 14 = Van 118" 15 = Van 140" 16 = Van 158" 56 = Wagon 158" 01 = Chassis Forward Control 118" 02 = Chassis Forward Control 140"	EX8 = Engine-2.7L I5 Mercedes Turbo Diesel	DGJ = Transmission-5-Spd. Automatic,W5A580

Case and Related Parts
Figure NAG1-210

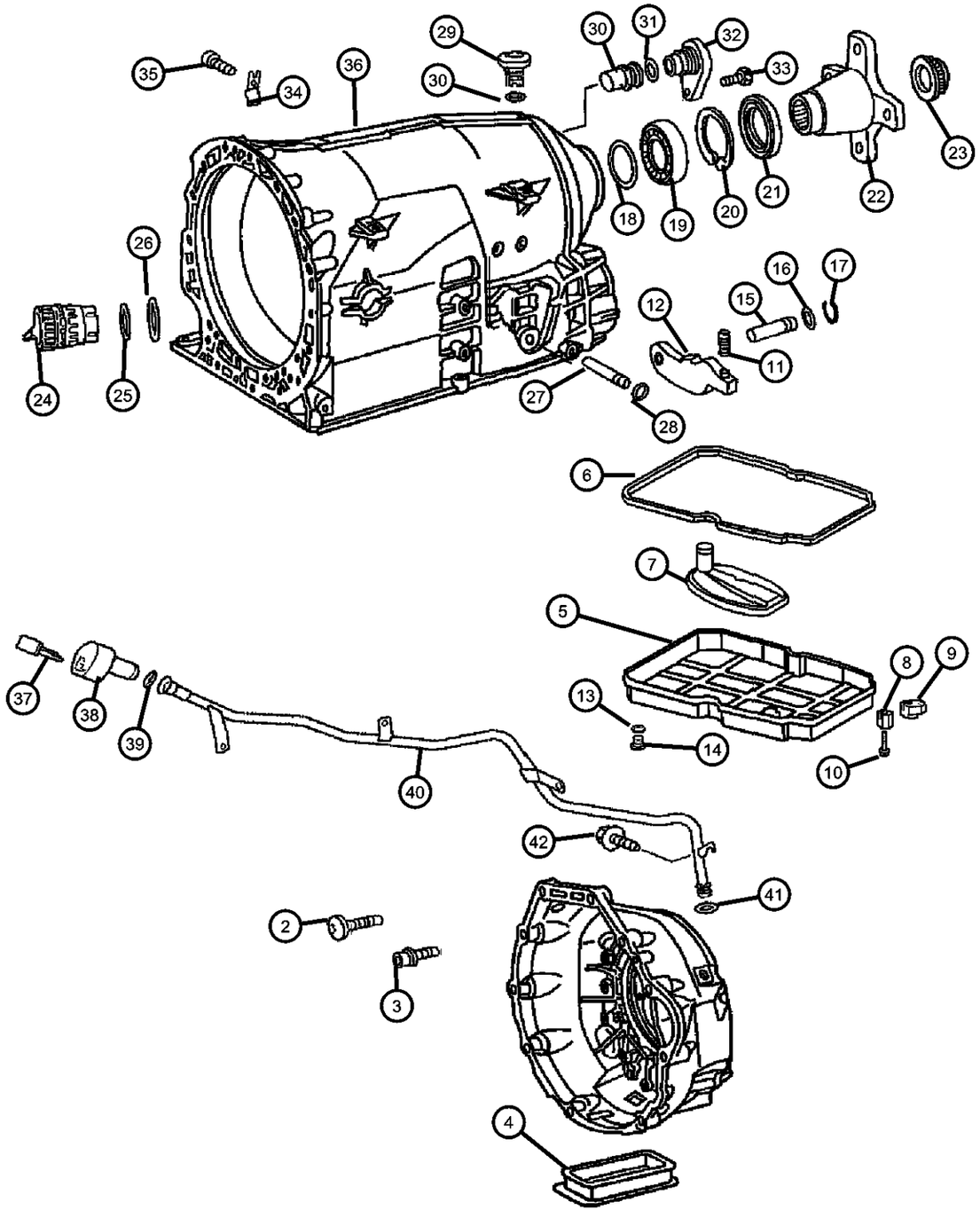

ITEM	PART NUMBER	QTY	LINE	SERIES	BODY	ENGINE	TRANS	TRIM	DESCRIPTION
24	52108322AA	1		L			DGJ		PLUG, Adapter
25	52108324AA	1		L			DGJ		O RING, Adapter Plug
26	52108323AA	1		L			DGJ		O RING, Adapter Plug
27	52108159AA	1		L			DGJ		PIN
28	52108323AA	1		L			DGJ		O RING, Adapter Plug
29	52108364AA	1		L			DGJ		BREATHER, Transmission
30	52108367AA	1		L			DGJ		SEAL, Transmission
31	05125908AA	1		L			DGJ		O RING, Sensor
32	05117839AA	1		L			DGJ		CAP, Oil Filler
33	05117839AA	1							BOLT, (NOT SERVICED)
34	52108179AA	1		L			DGJ		SPRING
35	52108161AA	1		L			DGJ		SCREW
36	05117849AA	1		L			DGJ		HOUSING, Transmission
37	05093746AA	1	3, 7	L			DGJ		PIN
38	53013549AA	1	3, 7	L			DGJ		CAP, Oil Filler
39	05101154AA	1	3, 7	L			DGJ		SEAL, Oil Filler Tube
40	05117847AA	1	3, 7	L			DGJ		TUBE, Transmission Oil Filler
41	05101154AA	1	3, 7	L			DGJ		SEAL, Oil Filler Tube
42	05125738AA	1	3, 7	L			DGJ		SCREW

SPRINTER (VA)

SERIES	LINE	BODY	ENGINE	TRANSMISSION
L = LOWLINE	3 = HD DODGE 2WD 6 = Lt. Duty DODGE 4WD 2 = Med. Duty DODGE 2WD 7 = Med. Duty DODGE 4WD	55 = Wagon 140" 54 = Wagon 118" 52 = Wagon 140" 51 = Wagon 118" 12 = Van 140" 11 = Van 118" 06 = Front Section 158" 14 = Van 118" 15 = Van 140" 16 = Van 158" 56 = Wagon 158" 01 = Chassis Forward Control 118" 02 = Chassis Forward Control 140"	EX8 = Engine-2.7L I5 Mercedes Turbo Diesel	DGJ = Transmission-5-Spd. Automatic,W5A580

Pump, Oil
Figure NAG1-310

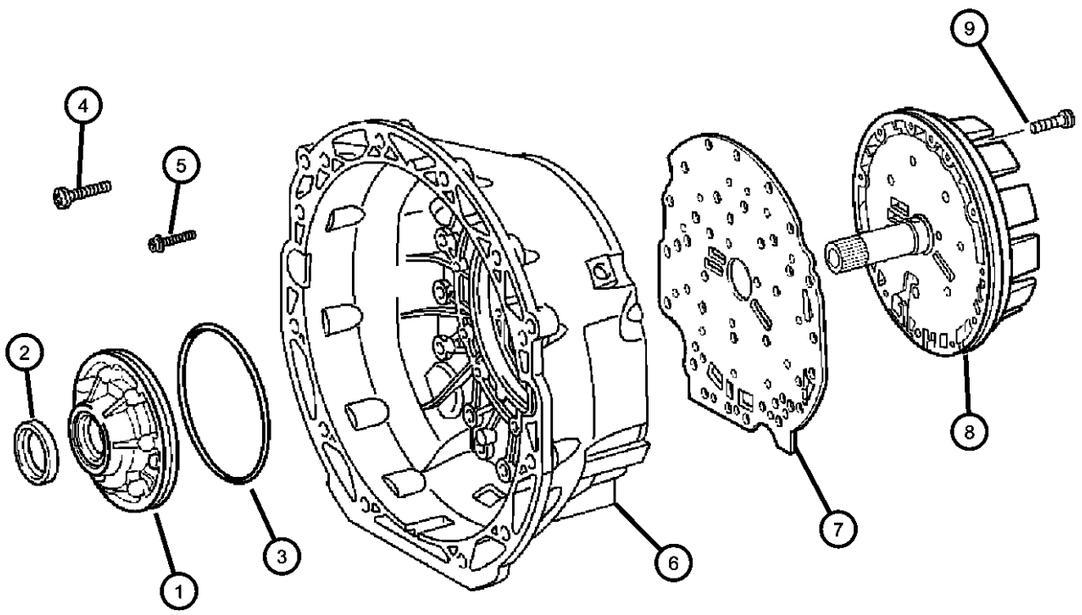

ITEM	PART NUMBER	QTY	LINE	SERIES	BODY	ENGINE	TRANS	TRIM	DESCRIPTION

NOTE:
Sales Codes:
[DGJ]=5 Speed Automatic Transmission - [NAG1] - [W5A380]

1	05080070AA	1		L	DGJ	PUMP, Transmission Oil
2	52107896AA	1		L	DGJ	SEAL
3	52107900AA	1		L	DGJ	O RING
4	52108396AA	2		L	DGJ	SCREW
5	52107934AA	11		L	DGJ	SCREW
6	05117848AA	1		L	DGJ	HOUSING, Torque Converter
7	52108147AA	1		L	DGJ	PLATE, Intermediate
8	05102926AA	1		L	DGJ	SUPPORT
9	52107933AA	7		L	DGJ	SCREW

SPRINTER (VA)

SERIES	LINE	BODY	ENGINE	TRANSMISSION
L = LOWLINE	3 = HD DODGE 2WD 6 = Lt. Duty DODGE 4WD 2 = Med. Duty DODGE 2WD 7 = Med. Duty DODGE 4WD	55 = Wagon 140" 54 = Wagon 118" 52 = Wagon 140" 51 = Wagon 118" 12 = Van 140" 11 = Van 118" 06 = Front Section 158" 14 = Van 118" 15 = Van 140" 16 = Van 158" 56 = Wagon 158" 01 = Chassis Forward Control 118" 02 = Chassis Forward Control 140"	EX8 = Engine-2.7L I5 Mercedes Turbo Diesel	DGJ = Transmission-5-Spd. Automatic,W5A580

Laminated Brake and Front Support - [B1]
Figure NAG1-410

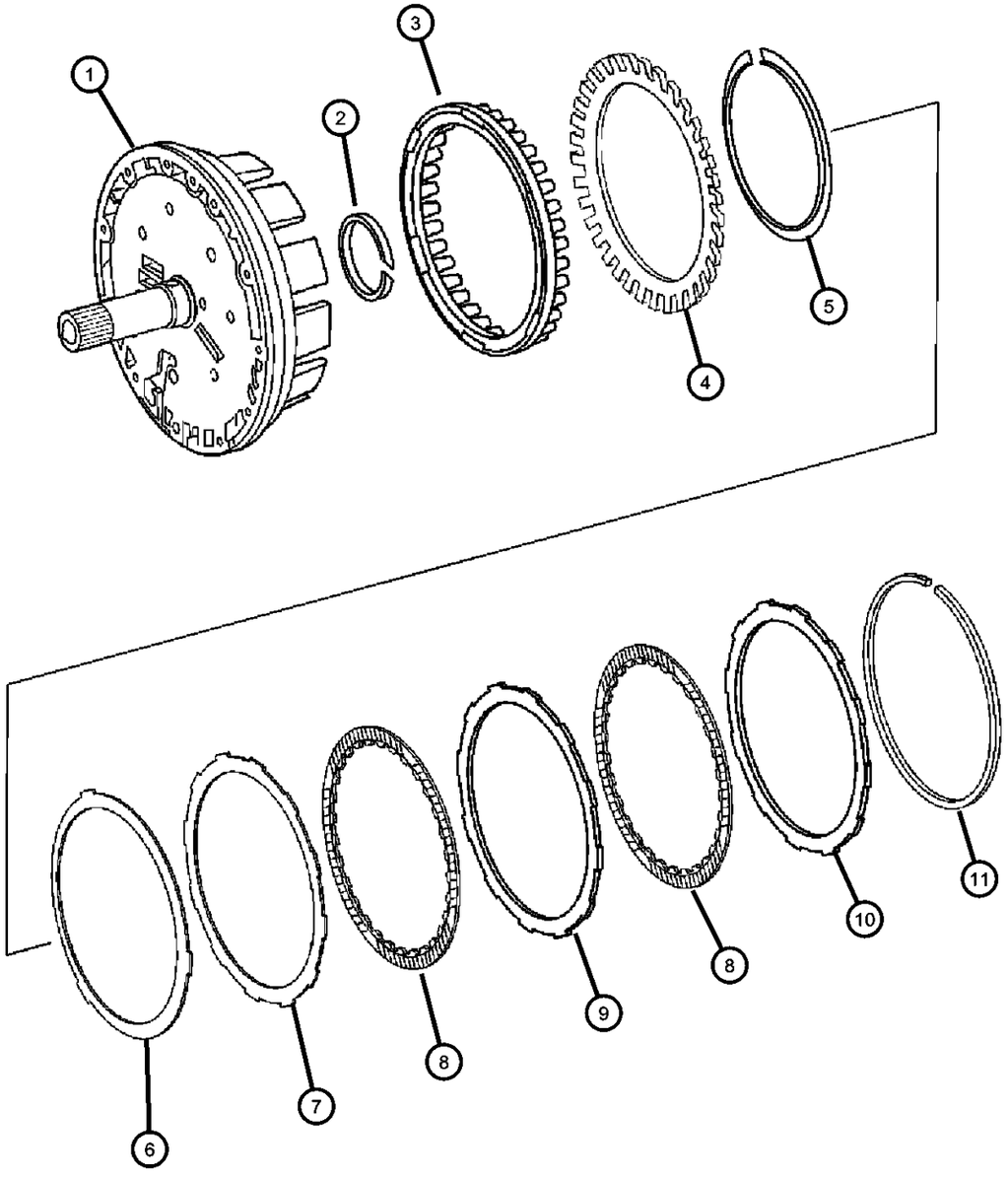

ITEM	PART NUMBER	QTY	LINE	SERIES	BODY	ENGINE	TRANS	TRIM	DESCRIPTION
NOTE:									
Sales Codes:									
[DGJ]=5 Speed Automatic Transmission - [NAG1] - [W5A380]									
1	05102926AA	1		L			DGJ		SUPPORT
2	52108028AA	2		L			DGJ		SEAL, Transmission
3	52108506AA	1		L			DGJ		PISTON
4	52108023AA	1		L			DGJ		DISC, Spring
5	52107936AA	1		L			DGJ		SNAP RING
6	52108024AA	1		L			DGJ		DISC, Spring
7	52107992AA	1		L					DISC, Outer
8	52108507AA	4		L			DGJ		DISC, Inner
9	52108508AA	4		L			DGJ		DISC, Outer
10	52107994AA	1		L			DGJ		DISC, Outer
11									SNAP RING
	52107949AA	1		L			DGJ		[2.6 MM]
	52107950AA	1		L			DGJ		[2.9 MM]
	52107951AA	1		L			DGJ		[3.2 MM]
	52107952AA	1		L			DGJ		[3.5 MM]

SPRINTER (VA)

SERIES	LINE	BODY	ENGINE	TRANSMISSION
L = LOWLINE	3 = HD DODGE 2WD 6 = Lt. Duty DODGE 4WD 2 = Med. Duty DODGE 2WD 7 = Med. Duty DODGE 4WD	55 = Wagon 140" 54 = Wagon 118" 52 = Wagon 140" 51 = Wagon 118" 12 = Van 140" 11 = Van 118" 06 = Front Section 158" 14 = Van 118" 15 = Van 140" 16 = Van 158" 56 = Wagon 158" 01 = Chassis Forward Control 118" 02 = Chassis Forward Control 140"	EX8 = Engine-2.7L I5 Mercedes Turbo Diesel	DGJ = Transmission-5-Spd. Automatic,W5A580

Gear Train, Front Planetary Clutch - [K-1]
Figure NAG1-420

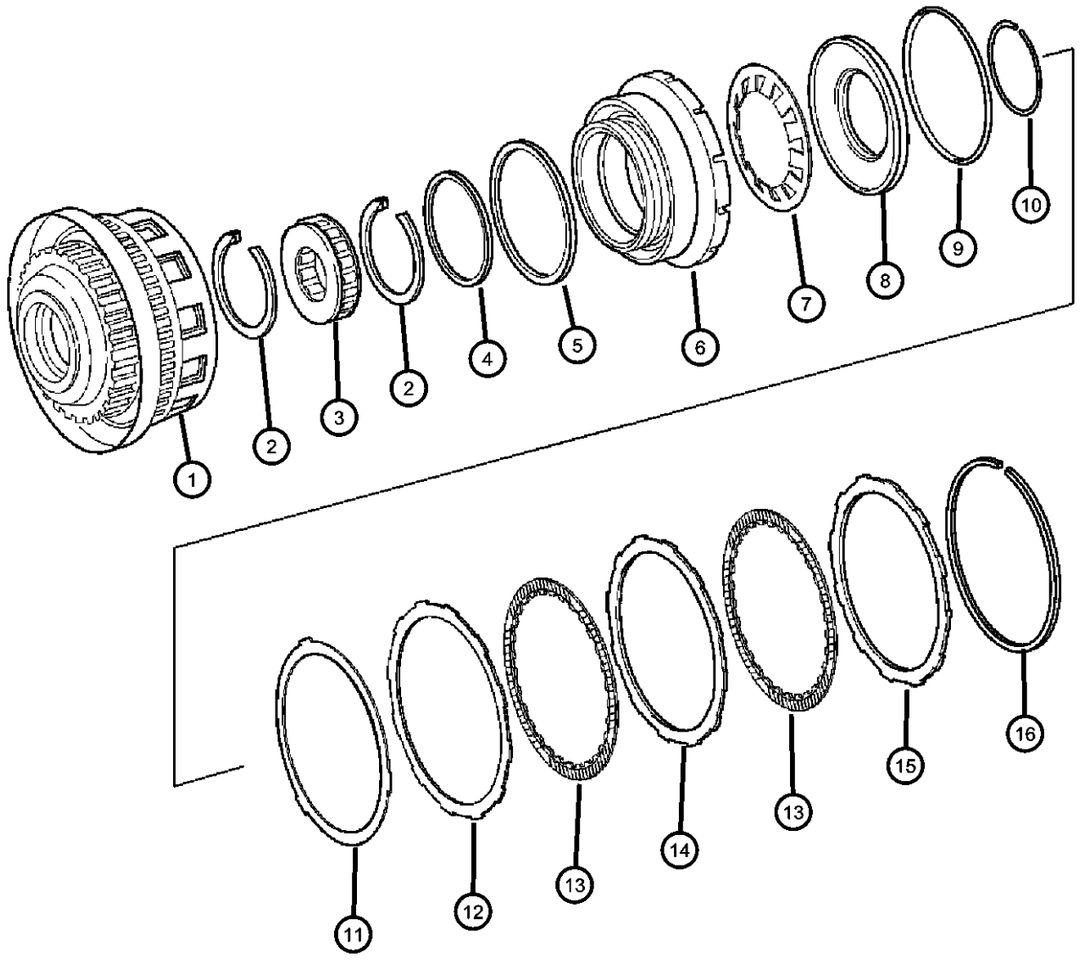

ITEM	PART NUMBER	QTY	LINE	SERIES	BODY	ENGINE	TRANS	TRIM	DESCRIPTION
NOTE:									
Sales Codes:									
[DGJ]=5 Speed Automatic Transmission - [NAG1] - [W5A380]									
1	52108510AA	1		L					DISC, Support
2	52107955AA	2		L			DGJ		SNAP RING
3	52108342AA	1		L			DGJ		WHEEL
4	52107938AA	1		L			DGJ		SEAL, Transmission
5	52107939AA	1		L			DGJ		SEAL, Transmission
6	52108059AA	1		L			DGJ		PISTON
7	52108057AA	1		L			DGJ		DISC, Spring
8	52108058AA	1		L			DGJ		SPRING, Retainer
9	52107941AA	1		L			DGJ		SEAL, Transmission
10	52107954AA	1		L			DGJ		SNAP RING
11	52108024AA	1		L			DGJ		DISC, Spring
12	52108004AA	4		L					DISC, Outer
13	52108507AA	5		L			DGJ		DISC, Inner
14									DISC, Outer
	52108508AA	4		L			DGJ		
		5		L			DGJ		
15	52107994AA	1		L			DGJ		DISC, Outer
16									SNAP RING
	52107950AA	1		L			DGJ		[2.9 MM]
	52107951AA	1		L			DGJ		[3.2 MM]
	52107952AA	1		L			DGJ		[3.5 MM]
	52107949AA	1		L			DGJ		[2.6 MM]
	52108373AA	1		L			DGJ		[3.8 MM]

SPRINTER (VA)

SERIES	LINE	BODY	ENGINE	TRANSMISSION
L = LOWLINE	3 = HD DODGE 2WD 6 = Lt. Duty DODGE 4WD 2 = Med. Duty DODGE 2WD 7 = Med. Duty DODGE 4WD	55 = Wagon 140" 54 = Wagon 118" 52 = Wagon 140" 51 = Wagon 118" 12 = Van 140" 11 = Van 118" 06 = Front Section 158" 14 = Van 118" 15 = Van 140" 16 = Van 158" 56 = Wagon 158" 01 = Chassis Forward Control 118" 02 = Chassis Forward Control 140"	EX8 = Engine-2.7L I5 Mercedes Turbo Diesel	DGJ = Transmission-5-Spd. Automatic,W5A580

Carrier, Planetary - [K1] - [VPLS]
Figure NAG1-430

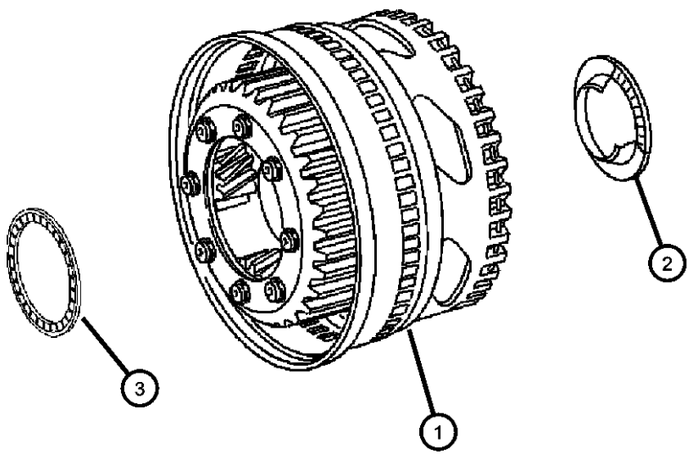

ITEM	PART NUMBER	QTY	LINE	SERIES	BODY	ENGINE	TRANS	TRIM	DESCRIPTION

NOTE:
Sales Codes:
[DGJ]=5 Speed Automatic Transmission -[NAG1] - [W5A380]

1	52108513AA	1		L	DGJ	CARRIER, Planetary
2	52108123AA	1		L	DGJ	NEEDLE BEARING
3	52108122AA	1		L	DGJ	NEEDLE BEARING

SPRINTER (VA)

SERIES	LINE	BODY	ENGINE	TRANSMISSION
L = LOWLINE	3 = HD DODGE 2WD 6 = Lt. Duty DODGE 4WD 2 = Med. Duty DODGE 2WD 7 = Med. Duty DODGE 4WD	55 = Wagon 140" 54 = Wagon 118" 52 = Wagon 140" 51 = Wagon 118" 12 = Van 140" 11 = Van 118" 06 = Front Section 158" 14 = Van 118" 15 = Van 140" 16 = Van 158" 56 = Wagon 158" 01 = Chassis Forward Control 118" 02 = Chassis Forward Control 140"	EX8 = Engine-2.7L I5 Mercedes Turbo Diesel	DGJ = Transmission-5-Spd. Automatic,W5A580

AR = use ase required - = Non illustrrated part

Clutch - Output Shaft - [K2]
Figure NAG1-440

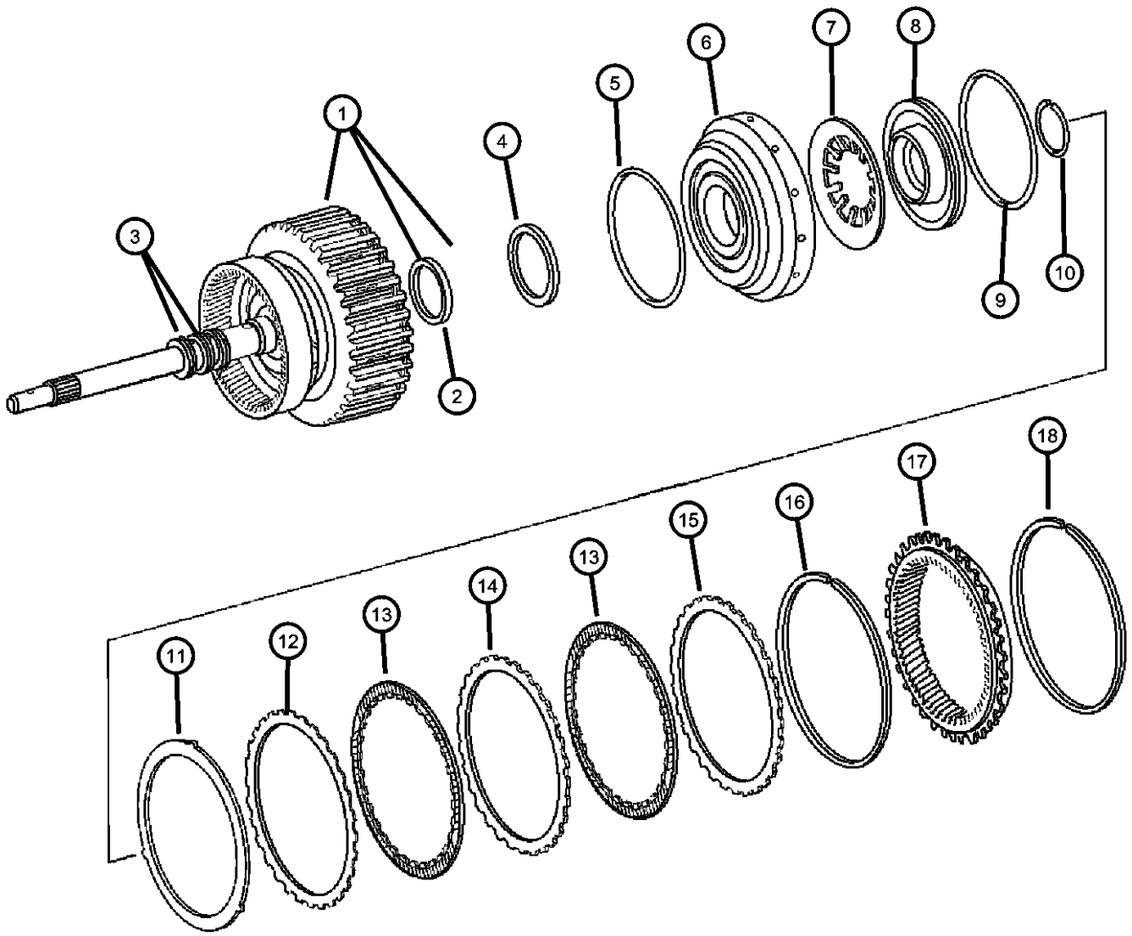

ITEM	PART NUMBER	QTY	LINE	SERIES	BODY	ENGINE	TRANS	TRIM	DESCRIPTION

NOTE:
Sales Codes:
[DGJ]=5 Speed Automatic Transmission - [NAG1] - [W5A380]

1	52108044AA	1		L			DGJ		SHAFT, Input
2	52108127AA	1		L			DGJ		SEAL, Transmission
3	52108534AA	3		L			DGJ		SEAL, Transmission
4	52108134AA	1		L			DGJ		SEAL, Transmission
5	52108135AA	1		L			DGJ		SEAL, Input Shaft
6	52108517AA	1		L			DGJ		PISTON
7	52108137AA	1		L			DGJ		DISC, Spring
8	52108138AA	1		L			DGJ		SPRING, Retainer
9	52108140AA	1		L			DGJ		SEAL, Transmission
10	52107970AA	1		L			DGJ		SNAP RING
11	52108346AA	1		L			DGJ		DISC, Spring
12	52107996AA	1		L			DGJ		DISC, Outer
13	05135135AA	5		L			DGJ		DISC, Inner
14	52107997AA	4		L			DGJ		DISC, Outer, [3.5 MM]
15	52107998AA	1		L			DGJ		DISC, Outer
16									SNAP RING
	52107959AA	1		L			DGJ		[2.6 MM]
	52107960AA	1		L			DGJ		[2.9 MM]
	52107961AA	1		L			DGJ		[3.2 MM]
	52107962AA	1		L			DGJ		[3.5 MM]
	52107958AA	1		L			DGJ		[2.3 MM]
17	52107922AA	1		L			DGJ		GEAR, Rear Annulus
18	52107926AA	1		L			DGJ		SNAP RING

SPRINTER (VA)

SERIES	LINE	BODY	ENGINE	TRANSMISSION
L = LOWLINE	3 = HD DODGE 2WD 6 = Lt. Duty DODGE 4WD 2 = Med. Duty DODGE 2WD 7 = Med. Duty DODGE 4WD	55 = Wagon 140" 54 = Wagon 118" 52 = Wagon 140" 51 = Wagon 118" 12 = Van 140" 11 = Van 118" 06 = Front Section 158" 14 = Van 118" 15 = Van 140" 16 = Van 158" 56 = Wagon 158" 01 = Chassis Forward Control 118" 02 = Chassis Forward Control 140"	EX8 = Engine-2.7L I5 Mercedes Turbo Diesel	DGJ = Transmission-5-Spd. Automatic,W5A580

Center & Rear Planetary Set - Output Shaft - [MPLS/HPLS]
Figure NAG1-450

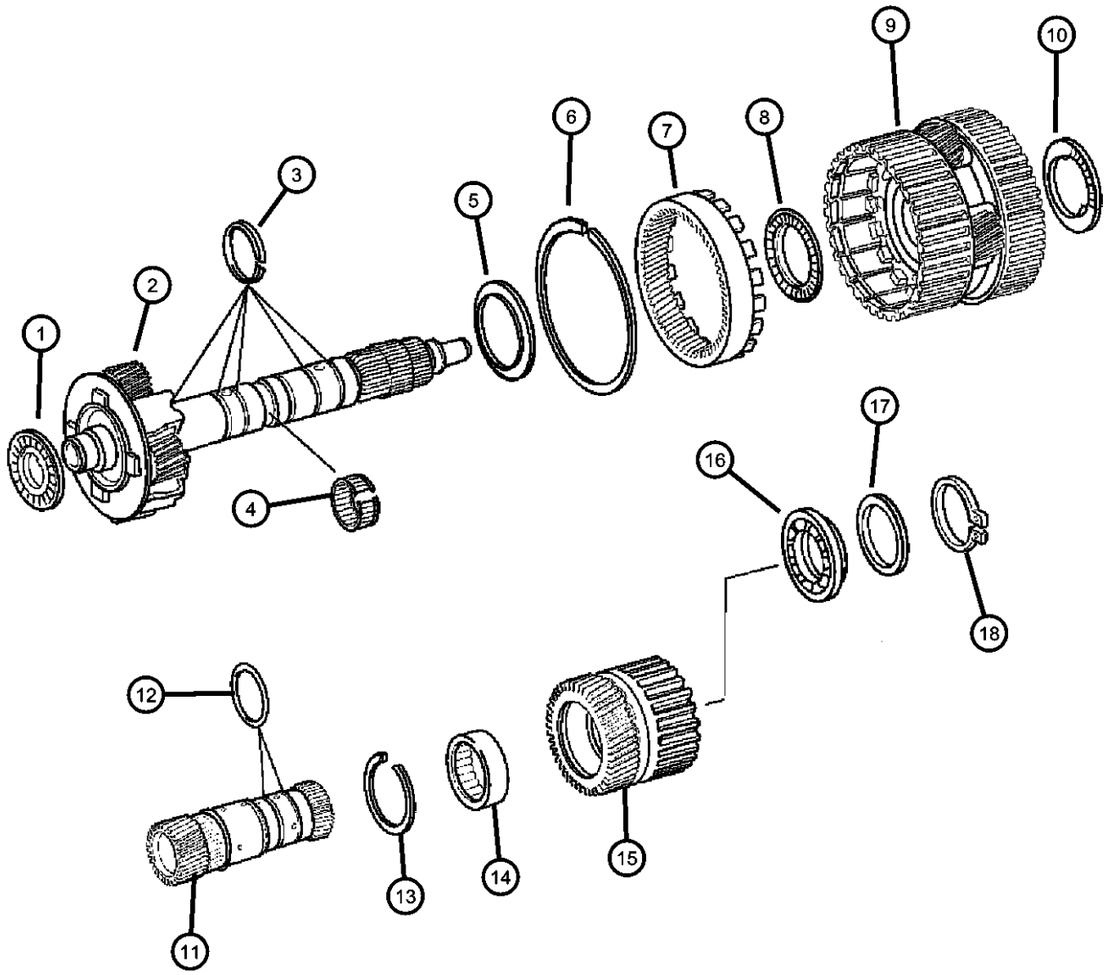

ITEM	PART NUMBER	QTY	LINE	SERIES	BODY	ENGINE	TRANS	TRIM	DESCRIPTION

NOTE:
Sales Codes:
[DGJ]=5 Speed Automatic Transmission - [NAG1] - [W5A380]

1	52107931AA	1		L			DGJ		NEEDLE BEARING
2	52107929AA	1		L			DGJ		SHAFT, Output
3	52108427AA	5		L			DGJ		SEAL, Transmission
4	52108069AA	1		L			DGJ		NEEDLE BEARING
5	52108070AA	1		L			DGJ		PLATE
6	52108374AA	1		L			DGJ		SNAP RING
7	52108376AA	1		L			DGJ		GEAR, Annulus
8	52107931AA	1		L			DGJ		NEEDLE BEARING
9	52108072AA	1		L			DGJ		CARRIER, Planetary
10	52107932AA	1		L			DGJ		NEEDLE BEARING
11	52108078AA	1		L			DGJ		GEAR, Sun
12	52108085AA	2		L			DGJ		SEAL, Transmission
13	52107966AA	1		L			DGJ		SNAP RING
14	52108522AA	1		L			DGJ		BEARING, Output Shaft
15	52108519AA	1		L			DGJ		GEAR, Sun
16	52108084AA	1		L			DGJ		BEARING
17	52108379AA	1		L			DGJ		SPACER
18	52107967AA	1		L			DGJ		SNAP RING

SPRINTER (VA)

SERIES	LINE	BODY	ENGINE	TRANSMISSION
L = LOWLINE	3 = HD DODGE 2WD 6 = Lt. Duty DODGE 4WD 2 = Med. Duty DODGE 2WD 7 = Med. Duty DODGE 4WD	55 = Wagon 140" 54 = Wagon 118" 52 = Wagon 140" 51 = Wagon 118" 12 = Van 140" 11 = Van 118" 06 = Front Section 158" 14 = Van 118" 15 = Van 140" 16 = Van 158" 56 = Wagon 158" 01 = Chassis Forward Control 118" 02 = Chassis Forward Control 140"	EX8 = Engine-2.7L I5 Mercedes Turbo Diesel	DGJ = Transmission-5-Spd. Automatic,W5A580

Clutch - [K3]
Figure NAG1-460

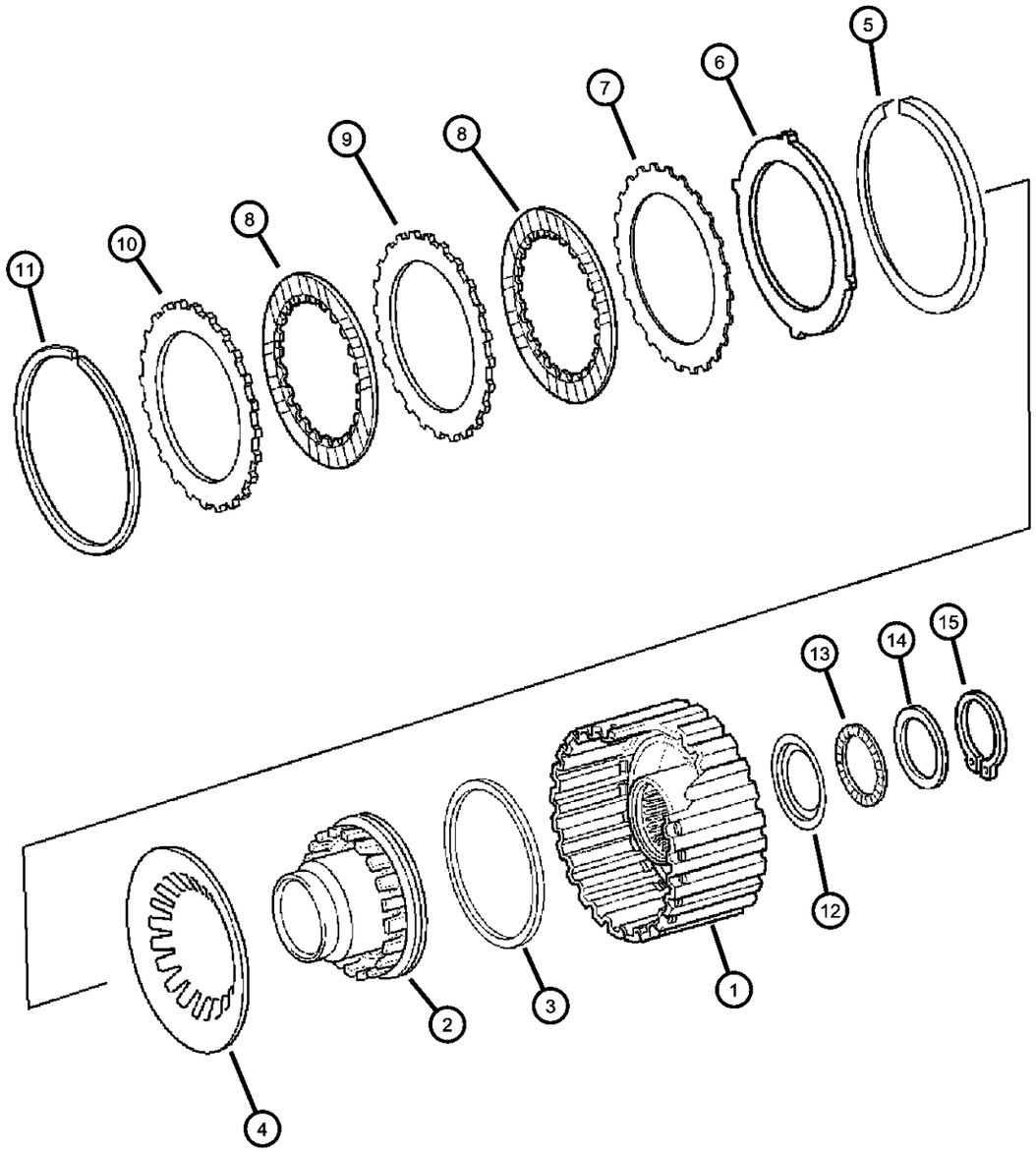

ITEM	PART NUMBER	QTY	LINE	SERIES	BODY	ENGINE	TRANS	TRIM	DESCRIPTION
NOTE:									
Sales Codes:									
[DGJ]=5 Speed Automatic Transmission - [NAG1] - [W5A380]									
1	52108524AA	1		L			DGJ		RETAINER, Clutch
2	52108094AA	1		L			DGJ		PISTON
3	52108093AA	1		L			DGJ		SEAL, Transmission
4	52108095AA	1		L			DGJ		DISC, Spring
5	52107968AA	1		L			DGJ		SNAP RING
6	52108096AA	1		L			DGJ		DISC, Spring
7	52108004AA	4		L					DISC, Outer
8	52108528AA	4		L			DGJ		DISC, Inner
9	52108529AA	4		L			DGJ		DISC, Outer
10	52108011AA	1		L			DGJ		DISC, Outer
11									SNAP RING
	52107972AA	1		L			DGJ		[2.9 MM]
	52107974AA	1		L			DGJ		[2.0 MM]
	52107970AA	1		L			DGJ		[2.3 MM]
	52107971AA	0		L			DGJ		[2.6 MM]
12	52108148AA	1		L			DGJ		SPACER
13	52108152AA	1		L			DGJ		NEEDLE BEARING
14									PLATE
	52108149AA	1		L			DGJ		[3.7 MM]
	52108150AA	1		L			DGJ		[3.1 MM]
	52108151AA	1		L			DGJ		[3.4 MM]
15	06507358AA	1		L			DGJ		RING

SPRINTER (VA)

SERIES	LINE	BODY	ENGINE	TRANSMISSION
L = LOWLINE	3 = HD DODGE 2WD 6 = Lt. Duty DODGE 4WD 2 = Med. Duty DODGE 2WD 7 = Med. Duty DODGE 4WD	55 = Wagon 140" 54 = Wagon 118" 52 = Wagon 140" 51 = Wagon 118" 12 = Van 140" 11 = Van 118" 06 = Front Section 158" 14 = Van 118" 15 = Van 140" 16 = Van 158" 56 = Wagon 158" 01 = Chassis Forward Control 118" 02 = Chassis Forward Control 140"	EX8 = Engine-2.7L I5 Mercedes Turbo Diesel	DGJ = Transmission-5-Spd. Automatic,W5A580

Multiple Disc Brake - [B2 & B3]
Figure NAG1-470

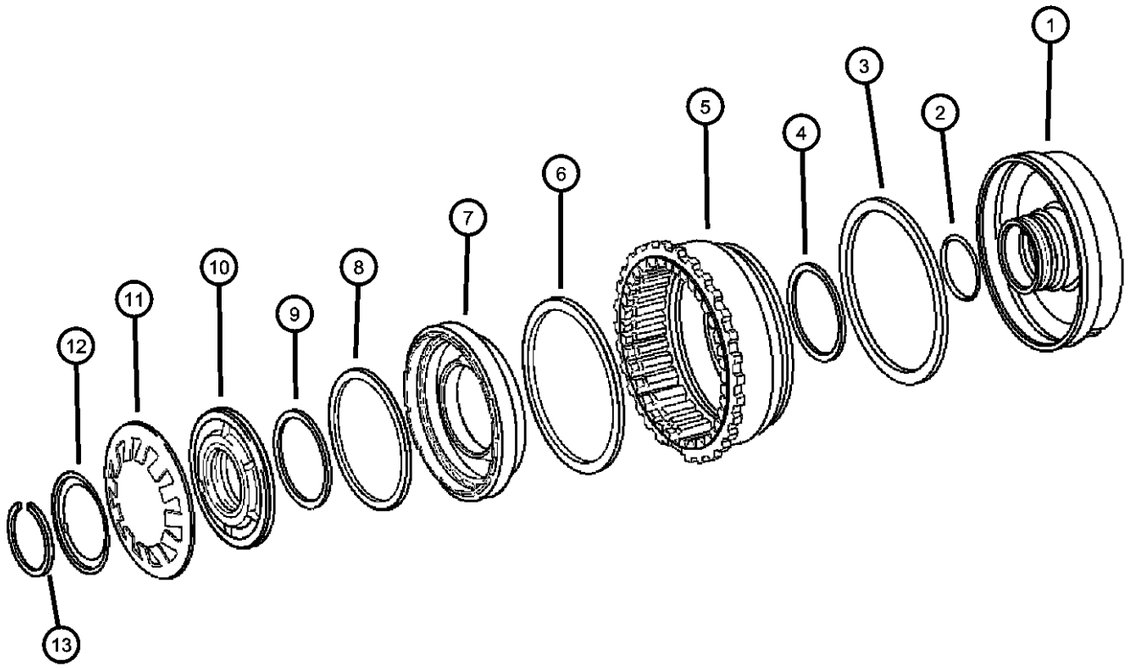

ITEM	PART NUMBER	QTY	LINE	SERIES	BODY	ENGINE	TRANS	TRIM	DESCRIPTION
NOTE:									
Sales Codes:									
[DGJ]=5 Speed Automatic Transmission - [NAG1] - [W5A380]									
1	52108182AA	1		L			DGJ		PLUNGER
2	52108185AA	2		L			DGJ		SEAL, Transmission
3	52108188AA	1		L			DGJ		SEAL, Transmission
4	52108189AA	1		L			DGJ		SEAL, Transmission
5	52108395AA	1		L			DGJ		PISTON
6	52108199AA	1		L			DGJ		SEAL, Transmission
7	52108191AA	1		L			DGJ		PISTON
8	52108200AA	1		L			DGJ		SEAL, Transmission
9	52108201AA	1		L			DGJ		SEAL, Transmission
10	52108351AA	1		L			DGJ		RING, Piston
11	52108202AA	1		L			DGJ		DISC, Spring
12	52108203AA	1		L			DGJ		SPRING, Retainer
13	52107977AA	1		L			DGJ		SNAP RING

SPRINTER (VA)

SERIES	LINE	BODY	ENGINE	TRANSMISSION
L = LOWLINE	3 = HD DODGE 2WD 6 = Lt. Duty DODGE 4WD 2 = Med. Duty DODGE 2WD 7 = Med. Duty DODGE 4WD	55 = Wagon 140" 54 = Wagon 118" 52 = Wagon 140" 51 = Wagon 118" 12 = Van 140" 11 = Van 118" 06 = Front Section 158" 14 = Van 118" 15 = Van 140" 16 = Van 158" 56 = Wagon 158" 01 = Chassis Forward Control 118" 02 = Chassis Forward Control 140"	EX8 = Engine-2.7L I5 Mercedes Turbo Diesel	DGJ = Transmission-5-Spd. Automatic,W5A580

Multiple Disc Brake - [B2 & B3]
Figure NAG1-480

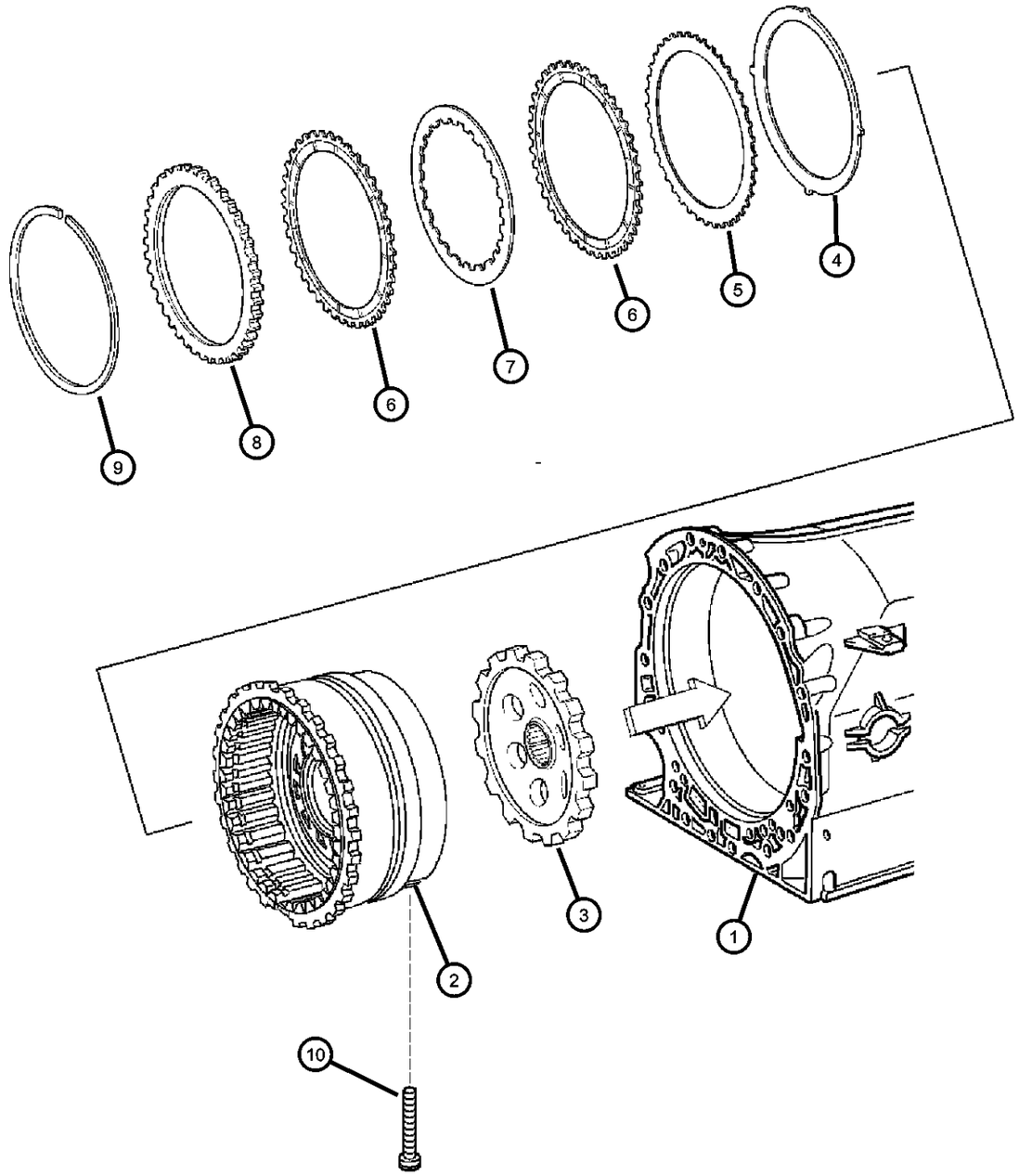

ITEM	PART NUMBER	QTY	LINE	SERIES	BODY	ENGINE	TRANS	TRIM	DESCRIPTION
NOTE:Drum Package Is Not Serviced In An Assembly. Please See Illustration [#470] Callouts [1,2,3,4 & 5] To Obtain Part Numbers									
Sales Codes:									
[DGJ]=5 Speed Automatic Transmission - [NAG1] - [W5A380]									
1	52107977AA	1							CASE, Transmission, See Illustration [#210], (NOT SERVICED)
2	52107977AA	1							DRUM PACKAGE, Transmission, See Illustration [#470] Callout [# 1,2,3,4 & 5], (NOT SERVICED)
3	52108180AA	1		L			DGJ		LOCK, Parking Wheel
4	52108354AA	1		L			DGJ		DISC, Spring
5	52108013AA	1		L			DGJ		DISC, Outer
6	52108572AA	5		L			DGJ		DISC, Outer
7	52108015AA	4		L			DGJ		DISC, Inner
8	52108014AA	1		L			DGJ		DISC, Outer
9									SNAP RING
	52107979AA	1		L			DGJ		[4.1 MM]
	52107980AA	1		L			DGJ		[3.8 MM]
	52107981AA	0	2, 3, 6, 7	L		EX8	DGJ		[3.5 MM]
	52107982AA	1		L			DGJ		[3.2 MM]
	52107983AA	1		L			DGJ		[2.9 MM]
10	52108205AA	2		L			DGJ		SCREW

SPRINTER (VA)

SERIES	LINE	BODY	ENGINE	TRANSMISSION
L = LOWLINE	3 = HD DODGE 2WD 6 = Lt. Duty DODGE 4WD 2 = Med. Duty DODGE 2WD 7 = Med. Duty DODGE 4WD	55 = Wagon 140" 54 = Wagon 118" 52 = Wagon 140" 51 = Wagon 118" 12 = Van 140" 11 = Van 118" 06 = Front Section 158" 14 = Van 118" 15 = Van 140" 16 = Van 158" 56 = Wagon 158" 01 = Chassis Forward Control 118" 02 = Chassis Forward Control 140"	EX8 = Engine-2.7L I5 Mercedes Turbo Diesel	DGJ = Transmission-5-Spd. Automatic,W5A580

AR = use ase required - = Non illustrrated part

Multiple Disc Brake - [B2 & B3]
Figure NAG1-490

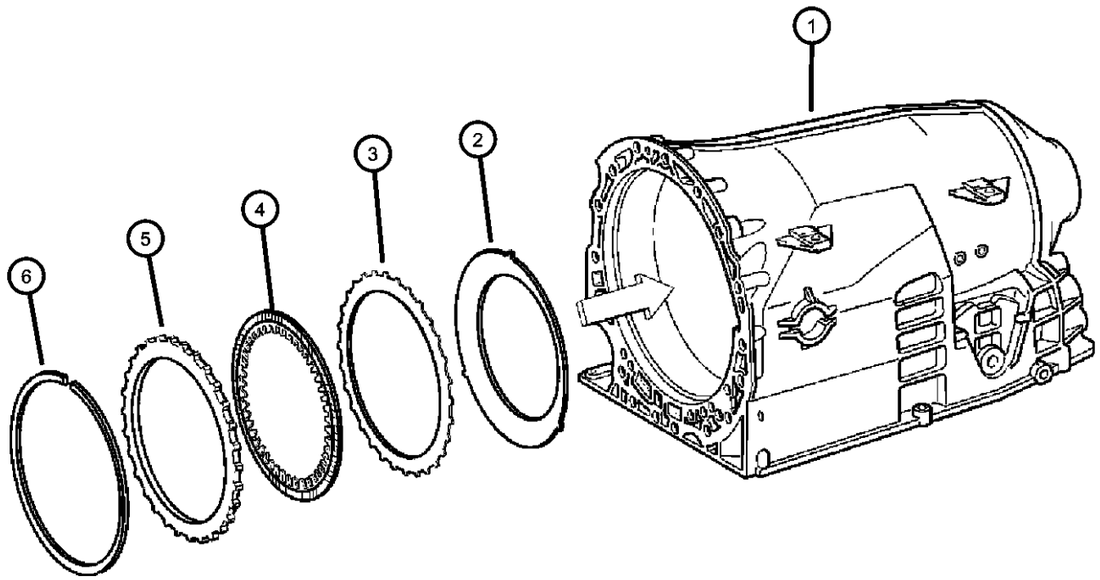

ITEM	PART NUMBER	QTY	LINE	SERIES	BODY	ENGINE	TRANS	TRIM	DESCRIPTION
NOTE:									
Sales Codes:									
[DGJ]=5 Speed Automatic Transmission - [NAG1] - [W5A380]									
1	52108205AA	2							HOUSING, Transmission Case, Serviced With Transmission Assembly, (NOT SERVICED)
2	52108356AA	1		L			DGJ		DISC, Spring
3	52108572AA	5		L			DGJ		DISC, Outer
4	52108573AA	5		L			DGJ		DISC, Inner
5	52108018AA	1		L			DGJ		DISC, Outer
6									SNAP RING
	52107985AA	1		L			DGJ		[3.2 MM]
	52107986AA	1		L			DGJ		[3.5 MM]
	52107987AA	1		L			DGJ		[3.8 MM]
	52107988AA	1		L			DGJ		[4.1 MM]
	52107989AA	1		L			DGJ		[4.4 MM]
	52107990AA	1		L			DGJ		[4.8 MM]

SPRINTER (VA)

SERIES	LINE	BODY	ENGINE	TRANSMISSION
L = LOWLINE	3 = HD DODGE 2WD 6 = Lt. Duty DODGE 4WD 2 = Med. Duty DODGE 2WD 7 = Med. Duty DODGE 4WD	55 = Wagon 140" 54 = Wagon 118" 52 = Wagon 140" 51 = Wagon 118" 12 = Van 140" 11 = Van 118" 06 = Front Section 158" 14 = Van 118" 15 = Van 140" 16 = Van 158" 56 = Wagon 158" 01 = Chassis Forward Control 118" 02 = Chassis Forward Control 140"	EX8 = Engine-2.7L I5 Mercedes Turbo Diesel	DGJ = Transmission-5-Spd. Automatic,W5A580

Electronic - Hydraulic Control
Figure NAG1-710

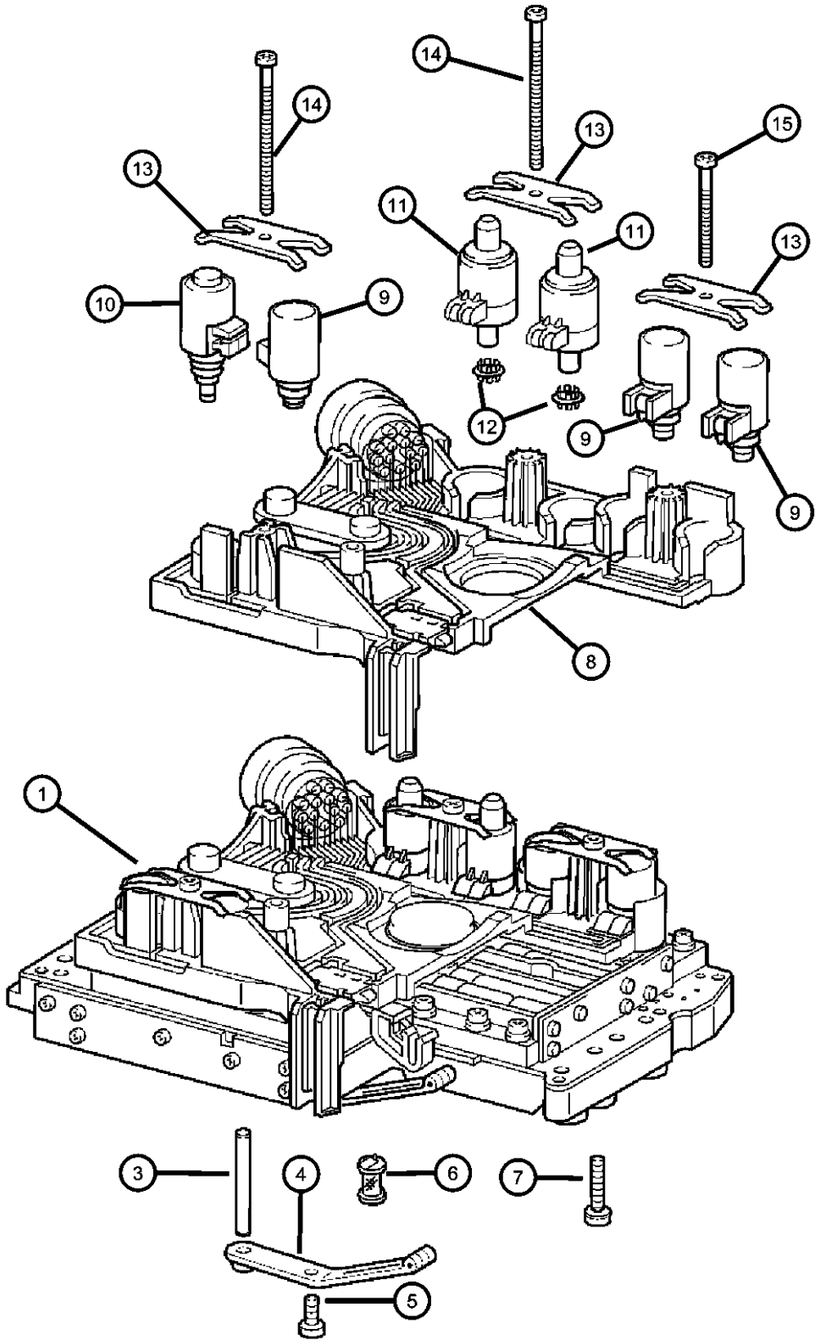

ITEM	PART NUMBER	QTY	LINE	SERIES	BODY	ENGINE	TRANS	TRIM	DESCRIPTION
NOTE:Valve Body Connector Includes Speed Sensor									
Sales Codes:									
[DGJ]=5 Speed Automatic Transmission - [NAG1] - [W5A380]									
1	05080262AA	1		L			DGJ		VALVE BODY, Complete
-2	52108320AA	1		L			DGJ		SHIELD, Transmission Solenoid
3	05098951AA	1		L			DGJ		DOWEL
4	52108258AA	1		L			DGJ		SPRING
5	05073867AA	1		L					SCREW
6	52108304AA	1		L			DGJ		FILTER, Transmission Oil
7	05073877AA	29		L					SCREW
8	52108308AA	1		L			DGJ		VALVE BODY
9	52108313AA	3		L			DGJ		SOLENOID, Transmission, Solenoid Valve
10	52108314AA	1		L			DGJ		SOLENOID, Transmission
11	52108312AA	2		L			DGJ		SOLENOID, Transmission
12	52108316AA	2		L			DGJ		FILTER, Transmission Oil
13	52108315AA	3		L			DGJ		PLATE
14	05073872AA	2		L					SCREW
15	05073873AA	1		L					SCREW

SPRINTER (VA)

SERIES	LINE	BODY	ENGINE	TRANSMISSION
L = LOWLINE	3 = HD DODGE 2WD 6 = Lt. Duty DODGE 4WD 2 = Med. Duty DODGE 2WD 7 = Med. Duty DODGE 4WD	55 = Wagon 140" 54 = Wagon 118" 52 = Wagon 140" 51 = Wagon 118" 12 = Van 140" 11 = Van 118" 06 = Front Section 158" 14 = Van 118" 15 = Van 140" 16 = Van 158" 56 = Wagon 158" 01 = Chassis Forward Control 118" 02 = Chassis Forward Control 140"	EX8 = Engine-2.7L I5 Mercedes Turbo Diesel	DGJ = Transmission-5-Spd. Automatic,W5A580

Gear Shift Control
Figure NAG1-1210

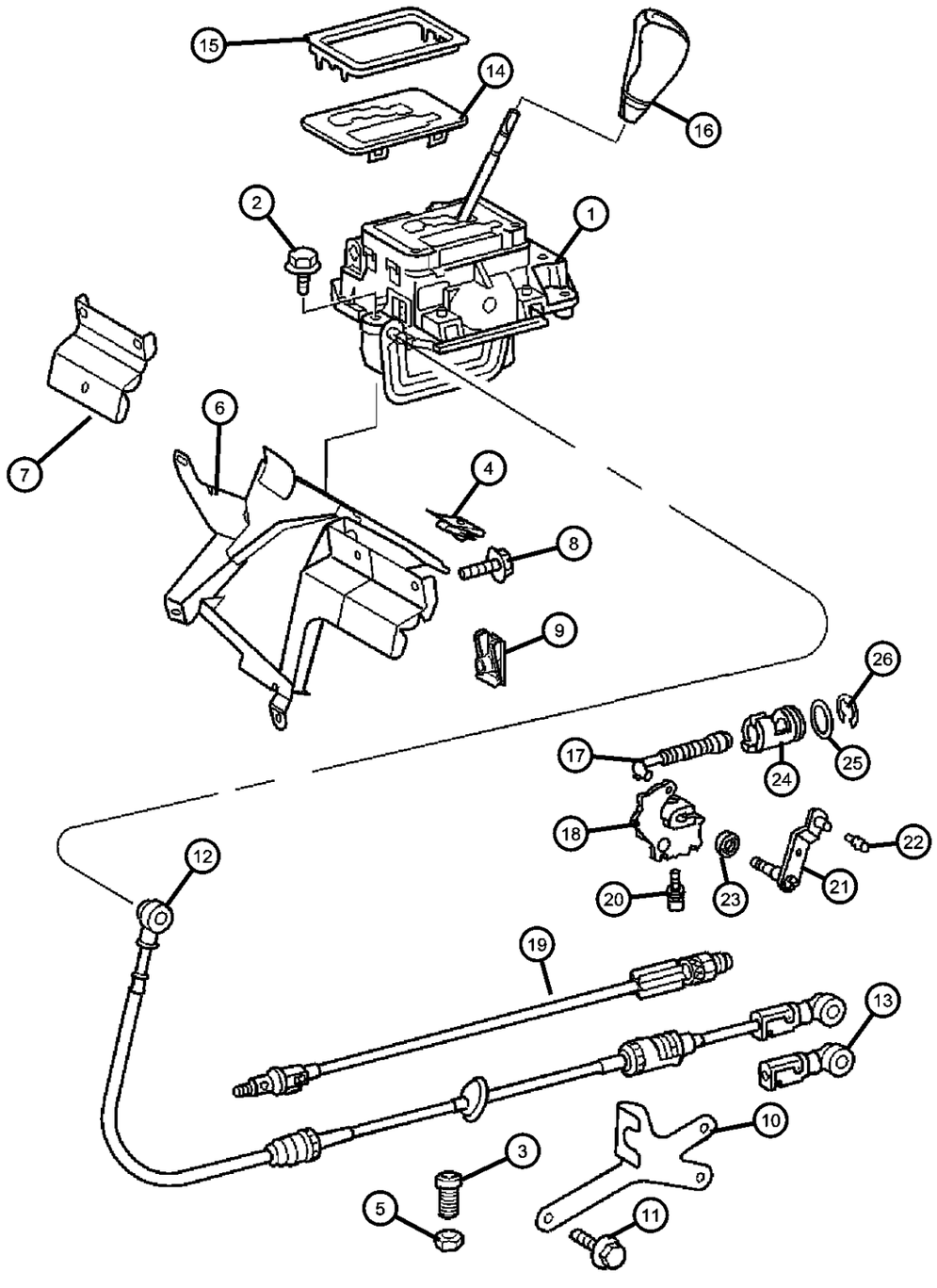

ITEM	PART NUMBER	QTY	LINE	SERIES	BODY	ENGINE	TRANS	TRIM	DESCRIPTION
NOTE:									
Sales Codes:									
[DGJ]=5 Speed Automatic Transmission - [NAG1] - [W5A380]									
1									SHIFTER, Transmission
	05104040AA	1	3, 7	L			DGJ		With Out [BNB]
	05135728AA	1	2, 6	L			DGJ		With [BNB]
2	05133476AA	3	3, 7	L			DGJ		SCREW
3									SCREW
	06104142AA	2	2, 6	L			DGJ		
		2	3, 7	L			DGJ		
4									NUT
	05103733AA	3	2, 6	L			DGJ		
		3	3, 7	L			DGJ		
5									NUT
	05126253AA	2	3, 7	L			DGJ		
		2	2, 6	L			DGJ		
6									SUPPORT
	05117814AA	1	2, 6	L			DGJ		
		1	3, 7	L			DGJ		
7									BRACKET, Transmission Shifter
	05122893AA	1	2, 6	L			DGJ		
		1	3, 7	L			DGJ		
8									BOLT, Hex Head
	05126227AA	6	2, 6	L					
		6	3, 7	L					
9									U-NUT
	05125859AA	1	2, 6	L			DGJ		
		1	3, 7	L			DGJ		
10									BRACKET, Gearshift

SPRINTER (VA)

SERIES	LINE	BODY	ENGINE	TRANSMISSION
L = LOWLINE	3 = HD DODGE 2WD 6 = Lt. Duty DODGE 4WD 2 = Med. Duty DODGE 2WD 7 = Med. Duty DODGE 4WD	55 = Wagon 140" 54 = Wagon 118" 52 = Wagon 140" 51 = Wagon 118" 12 = Van 140" 11 = Van 118" 06 = Front Section 158" 14 = Van 118" 15 = Van 140" 16 = Van 158" 56 = Wagon 158" 01 = Chassis Forward Control 118" 02 = Chassis Forward Control 140"	EX8 = Engine-2.7L I5 Mercedes Turbo Diesel	DGJ = Transmission-5-Spd. Automatic,W5A580

Gear Shift Control
Figure NAG1-1210

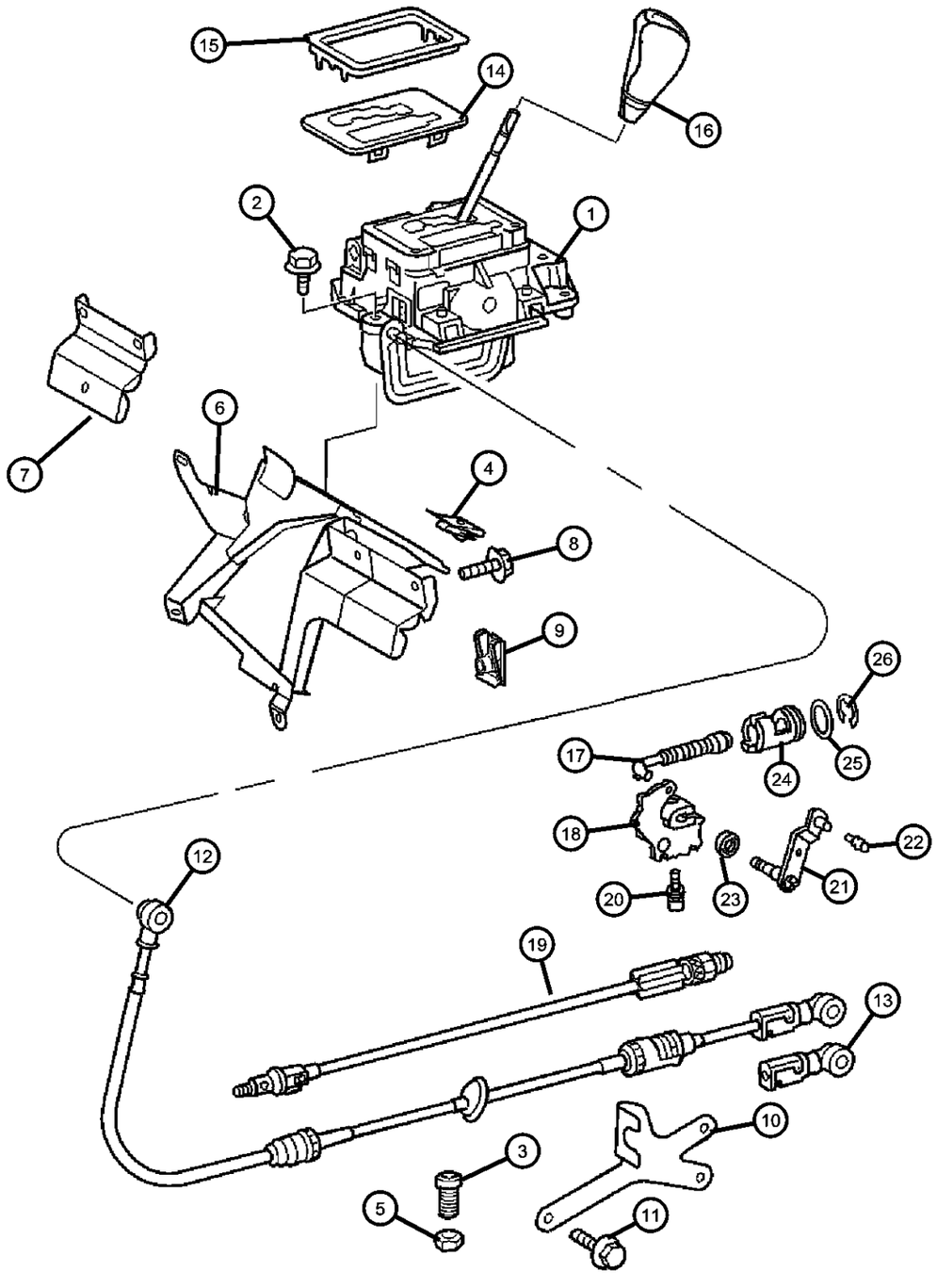

ITEM	PART NUMBER	QTY	LINE	SERIES	BODY	ENGINE	TRANS	TRIM	DESCRIPTION
	05117826AA	1	3, 7	L			DGJ		
		1	2, 6	L			DGJ		
11									BOLT, Hex Head
	05126101AA	3	2, 6	L			DGJ		
		3	3, 7	L			DGJ		
12									CABLE, Gear Selector
	05104039AA	1	2, 6	L			DGJ		
		1	3, 7	L			DGJ		
13									RETAINER, Transmission Control Shift
	05104044AA	1	2, 6	L			DGJ		
		1	3, 7	L			DGJ		
14									COVER, Gearshift
	05104041AA	1	2, 6	L			DGJ		
		1	3, 7	L			DGJ		
15		1							TRIM, See Center Console, (NOT SERVICED)
16									KNOB, Gearshift
	05117825AA	1	2, 6	L			DGJ		
		1	3, 7	L			DGJ		
17	52108166AA	1		L			DGJ		LINKAGE, Transmission
18	05099886AA	1		L			DGJ		DETENT, Gearshift
19									CABLE, Park Interlock
	05104043AA	1	2, 6	L			DGJ		
		1	3, 7	L			DGJ		
20	52108178AA	1		L			DGJ		SCREW
21	05117845AA	1		L			DGJ		LEVER, Gearshift
22	05096975AA	1		L			DGJ		PIVOT
23	52108170AA	1		L			DGJ		SEAL, Transmission

SPRINTER (VA)

SERIES	LINE	BODY	ENGINE	TRANSMISSION
L = LOWLINE	3 = HD DODGE 2WD 6 = Lt. Duty DODGE 4WD 2 = Med. Duty DODGE 2WD 7 = Med. Duty DODGE 4WD	55 = Wagon 140" 54 = Wagon 118" 52 = Wagon 140" 51 = Wagon 118" 12 = Van 140" 11 = Van 118" 06 = Front Section 158" 14 = Van 118" 15 = Van 140" 16 = Van 158" 56 = Wagon 158" 01 = Chassis Forward Control 118" 02 = Chassis Forward Control 140"	EX8 = Engine-2.7L I5 Mercedes Turbo Diesel	DGJ = Transmission-5-Spd. Automatic,W5A580

Gear Shift Control
Figure NAG1-1210

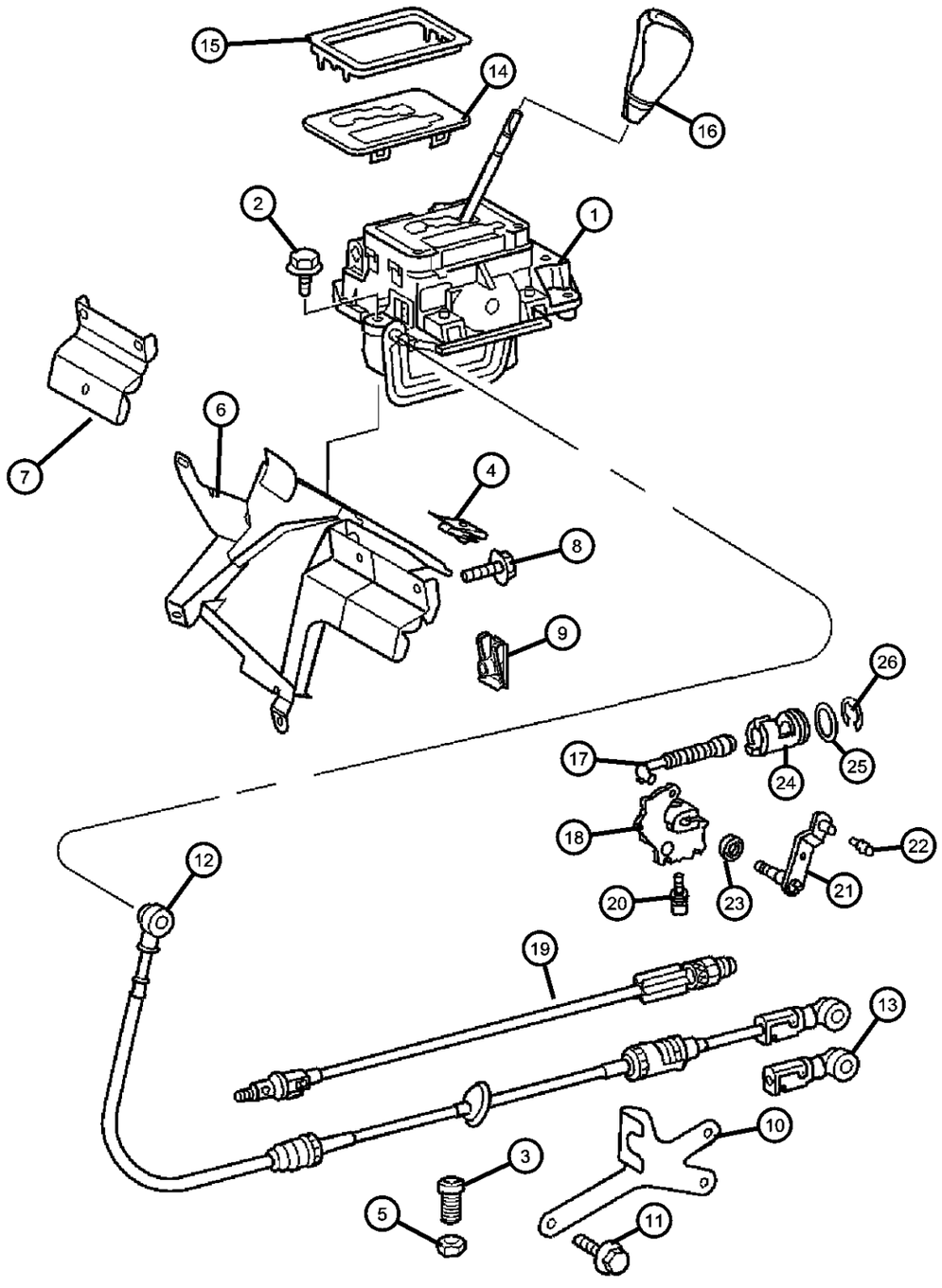

ITEM	PART NUMBER	QTY	LINE	SERIES	BODY	ENGINE	TRANS	TRIM	DESCRIPTION
24	52108176AA	1		L			DGJ		GUIDE
25	52108177AA	1		L			DGJ		SEAL, Transmission
26	52107976AA	1		L			DGJ		SNAP RING

SPRINTER (VA)

SERIES	LINE	BODY	ENGINE	TRANSMISSION
L = LOWLINE	3 = HD DODGE 2WD 6 = Lt. Duty DODGE 4WD 2 = Med. Duty DODGE 2WD 7 = Med. Duty DODGE 4WD	55 = Wagon 140" 54 = Wagon 118" 52 = Wagon 140" 51 = Wagon 118" 12 = Van 140" 11 = Van 118" 06 = Front Section 158" 14 = Van 118" 15 = Van 140" 16 = Van 158" 56 = Wagon 158" 01 = Chassis Forward Control 118" 02 = Chassis Forward Control 140"	EX8 = Engine-2.7L I5 Mercedes Turbo Diesel	DGJ = Transmission-5-Spd. Automatic,W5A580

AR = use ase required - = Non illustrrated part

Group - 22

Wheels, Covers and Jacks

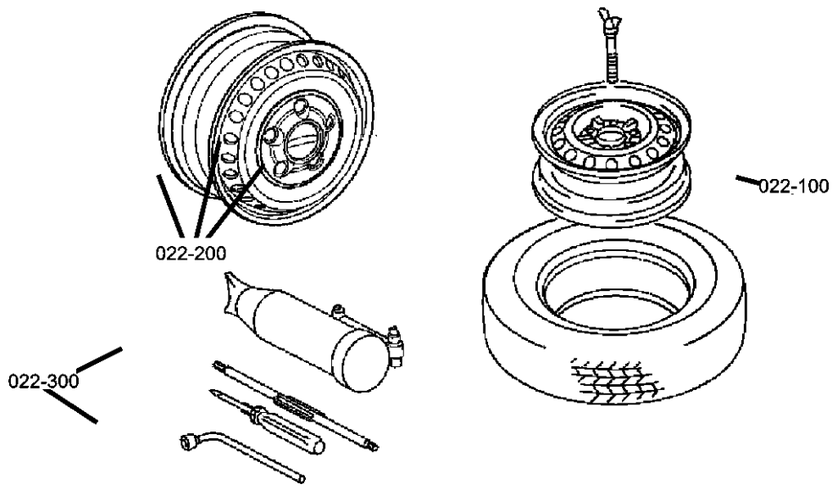

022-100 Wheels and Hardware	022-300 Jack Stowage	022-400 Spare Tire Stowage	
	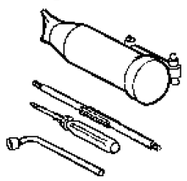	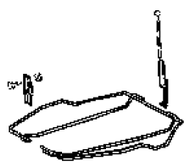	

Group - 22 Wheels, Covers and Jacks

Illustration Title — Group-Fig. No.

Wheels and Hardware
Wheels And Hardware ..... Fig. 22 - 120

Jack Stowage
Jack and Stowage ..... Fig. 22 - 340

Spare Tire Stowage
Wheel, Spare ..... Fig. 22 - 430

Wheels And Hardware
Figure 22-120

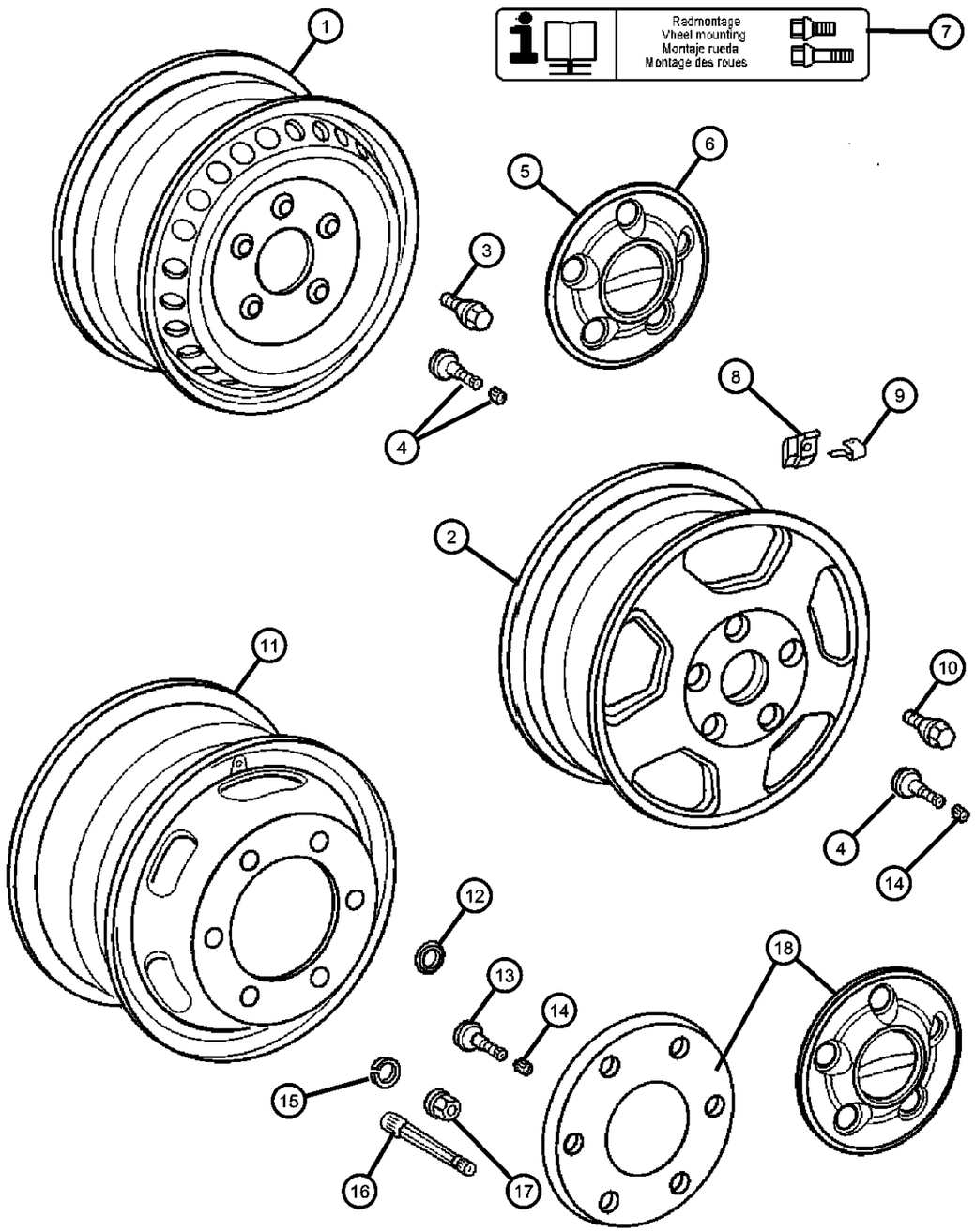

ITEM	PART NUMBER	QTY	LINE	SERIES	BODY	ENGINE	TRANS	TRIM	DESCRIPTION
1									WHEEL
	05103605AA	1	2, 6	L	11, 12, 14, 15, 16				[WCL+WWW]
	05118929AA	2	2, 6	L	06, 01, 02				[WCL,-WWW]
		2	2, 6	L	11, 12, 14, 15, 16				[WCL,-WWW]
	05128908AA	2	2, 6	L	01, 02, 06				[WDG+WWA+4Z1,4XS]
		2	2, 6	L	11, 12, 14, 15, 16				[WDG+WWA+4Z1,4XS]
		2	2, 6	L	51, 52, 54, 55, 56				[WCL,-WWW]
	05128907AA	2	2, 6	L	01, 02, 06				[WCL+WWA]
		2	2, 6	L	11, 12, 14, 15, 16				[WCL+WWA]
		2	2, 6	L	51, 52, 54, 55, 56				[WCL+WWA]
	05128911AA	2	2, 6	L	11, 12, 14, 15, 16				[WDG+4Z1,4XS]
		2	2, 6	L	51, 52, 54, 55, 56				[WDG+WWA+4Z1,4XS]
		2	2, 6	L	01, 02, 06				[WDG+4Z1,4XS]
		2	2, 6	L	51, 52, 54, 55, 56				[WDG+4Z1,4XS]
2	05140692AA	4	2, 6						WHEEL, Aluminum, [WWB] [16x6.5]
3									BOLT
	05104080AA	20	2, 6	L	11, 12, 14, 15, 16				
		20	2, 6	L	52, 54, 55, 56, 51				
4									STEM, Wheel Valve
	05103629AA	99	2, 6	L	01, 02, 06				
		2	2, 6	L	11, 12, 14, 15, 16				
		2	2, 6	L	51, 52, 54, 55, 56				
	05118963AA	2	3, 7	L	12, 15, 16				

SPRINTER (VA)

SERIES	LINE	BODY	ENGINE	TRANSMISSION
L = LOWLINE	3 = HD DODGE 2WD 6 = Lt. Duty DODGE 4WD 2 = Med. Duty DODGE 2WD 7 = Med. Duty DODGE 4WD	55 = Wagon 140" 54 = Wagon 118" 52 = Wagon 140" 51 = Wagon 118" 12 = Van 140" 11 = Van 118" 06 = Front Section 158" 14 = Van 118" 15 = Van 140" 16 = Van 158" 56 = Wagon 158" 01 = Chassis Forward Control 118" 02 = Chassis Forward Control 140"	EX8 = Engine-2.7L I5 Mercedes Turbo Diesel	DGJ = Transmission-5-Spd. Automatic,W5A580

Wheels And Hardware
Figure 22-120

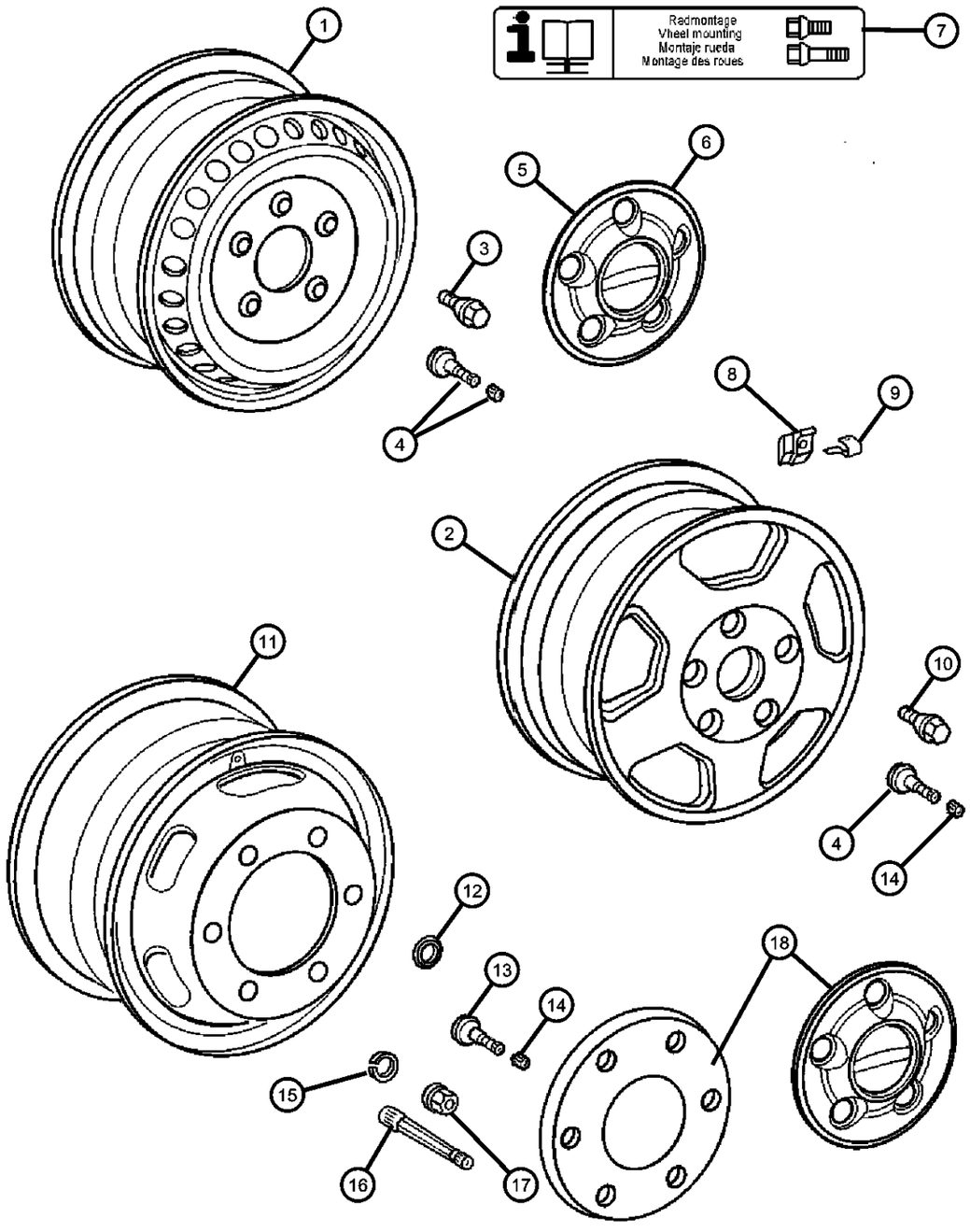

ITEM	PART NUMBER	QTY	LINE	SERIES	BODY	ENGINE	TRANS	TRIM	DESCRIPTION
5									CAP, Wheel Center
	05104571AA	4	6	L	01, 02, 06				
		4	6	L	11, 12, 14, 15, 16				
		4	6	L	51, 52, 54, 55, 56				
	05128954AA	4	2	L	01, 02, 06				
		4	2	L	11, 12, 14, 15, 16				
		4	2	L	51, 52, 54, 55, 56				
6									CAP, Wheel Center
	05104582AA	2	7	L	12, 15, 16				
		2	7	L	02, 06				
7									LABEL
	05129737AA	1	2, 6	L	11, 12, 14, 15, 16				
		1	2, 6	L	51, 52, 54, 55, 56				
8		1							WEIGHT, Balance, Perf Part, (NOT SERVICED)
9		1							BRACKET, (NOT SERVICED)
10									BOLT
	05104018AA	5	6	L	11, 12, 14, 15, 16				
		5	6	L	51, 52, 54, 55, 56				
11	05104581AA	2	3, 7	L	12, 15, 16				WHEEL
12	05103941AA	12	3, 7	L	12, 15, 16				WASHER
13									STEM, Wheel Valve
	05103628AA	2	2, 6	L	01, 02, 06				
		2	2, 6	L	51, 52, 54, 55, 56				

SPRINTER (VA)

SERIES	LINE	BODY	ENGINE	TRANSMISSION
L = LOWLINE	3 = HD DODGE 2WD 6 = Lt. Duty DODGE 4WD 2 = Med. Duty DODGE 2WD 7 = Med. Duty DODGE 4WD	55 = Wagon 140" 54 = Wagon 118" 52 = Wagon 140" 51 = Wagon 118" 12 = Van 140" 11 = Van 118" 06 = Front Section 158" 14 = Van 118" 15 = Van 140" 16 = Van 158" 56 = Wagon 158" 01 = Chassis Forward Control 118" 02 = Chassis Forward Control 140"	EX8 = Engine-2.7L I5 Mercedes Turbo Diesel	DGJ = Transmission-5-Spd. Automatic,W5A580

AR = use ase required - = Non illustrrated part

Wheels And Hardware
Figure 22-120

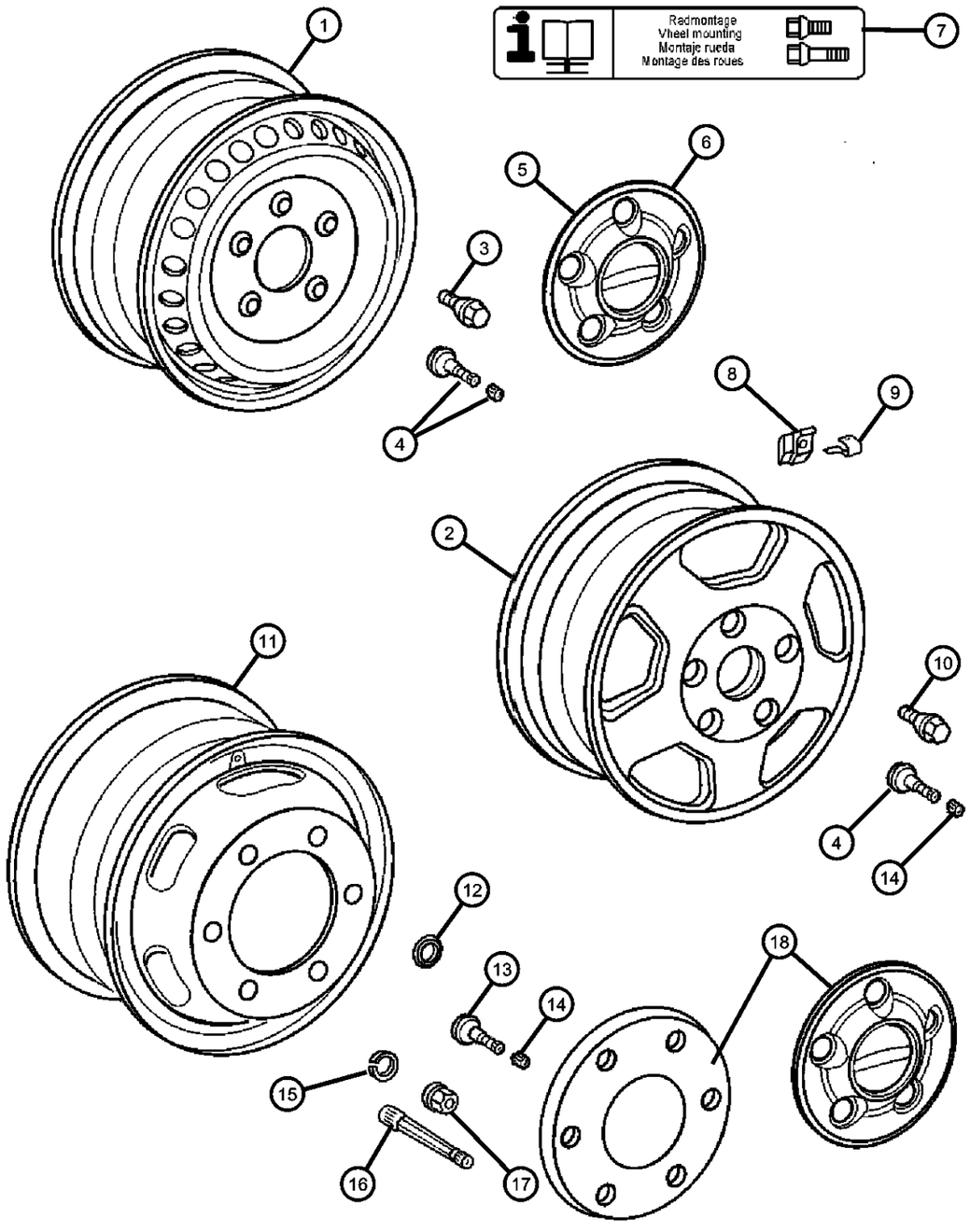

ITEM	PART NUMBER	QTY	LINE	SERIES	BODY	ENGINE	TRANS	TRIM	DESCRIPTION
		2	3, 7	L	12, 15, 16				
		2	2, 6	L	11, 12, 14, 15, 16				
14									CAP, Valve stem
	05104630AA	2	2, 6	L	01, 02, 06				
		2	2, 6	L	11, 12, 14, 15, 16				
		99	3, 7	L	12, 15, 16				
		2	2, 6	L	51, 52, 54, 55, 56				
15	05104538AA	12	3, 7	L	12, 15, 16				WASHER, Lock
16	05118963AA	2	3, 7	L	12, 15, 16				STEM, Wheel Valve
17	05104651AA	12	3, 7	L	16, 12, 15				NUT
18									COVER, Wheel
	05104570AA	4	2, 6	L	01, 02, 06				
		4	2, 6	L	11, 12, 14, 15, 16				
		4	2, 6	L	51, 52, 54, 55, 56				
	05114454AA	2	3	L	02, 06				Dodge 3500
		2	3	L	12, 15, 16				Dodge 3500

SPRINTER (VA)

SERIES	LINE	BODY	ENGINE	TRANSMISSION
L = LOWLINE	3 = HD DODGE 2WD 6 = Lt. Duty DODGE 4WD 2 = Med. Duty DODGE 2WD 7 = Med. Duty DODGE 4WD	55 = Wagon 140" 54 = Wagon 118" 52 = Wagon 140" 51 = Wagon 118" 12 = Van 140" 11 = Van 118" 06 = Front Section 158" 14 = Van 118" 15 = Van 140" 16 = Van 158" 56 = Wagon 158" 01 = Chassis Forward Control 118" 02 = Chassis Forward Control 140"	EX8 = Engine-2.7L I5 Mercedes Turbo Diesel	DGJ = Transmission-5-Spd. Automatic,W5A580

AR = use ase required - = Non illustrrated part

Jack and Stowage
Figure 22-340

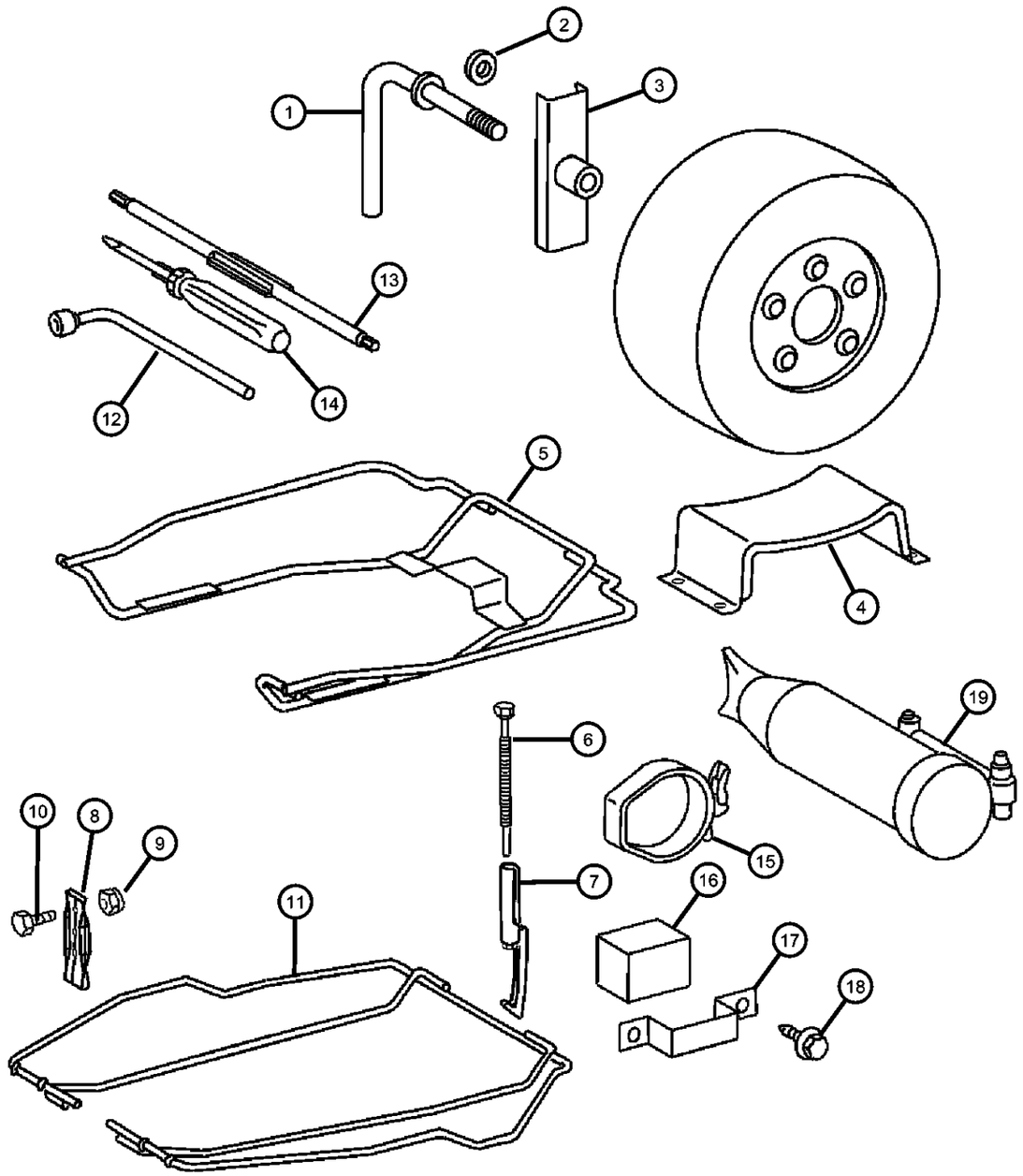

ITEM	PART NUMBER	QTY	LINE	SERIES	BODY	ENGINE	TRANS	TRIM	DESCRIPTION
1	05104529AA	1	2, 6	L	11, 12, 14, 15, 16				SCREW
2									WASHER, Flat
	05126189AB	4	3, 7	L	12, 15, 16				
		4	2, 6	L	11, 12, 14, 15, 16				
		4	2, 6	L	51, 52, 54, 55, 56				
3	05104528AA	1	2, 6	L	11, 12, 14, 15, 16				BRACKET, Spare Tire Winch
4									REST, Spare Tire
	05121441AA	1	3, 7	L	12, 15, 16				
		1	2, 6	L	11, 12, 14, 15, 16				
5									SUPPORT, Spare Tire
	05104078AA	1	2, 6	L	51, 52, 54, 55, 56				
	05118911AA	1	3, 7	L	06				158 Inch Wheelbase
		1	3, 7	L	16				158 Inch Wheelbase
	05118913AA	1	3, 7	L	02				140 Inch Wheelbase
		1	3, 7	L	12, 15				140 Inch Wheelbase
		1	2, 6	L	11, 12, 14, 15, 16				
6	05104082AA	2	2, 6	L	51, 52, 54, 55, 56				SCREW, Spare Tire
7									HOOK, Spare Tire Attach
	05118920AA	2	2, 6	L	11, 12, 14, 15, 16				
		2	2, 6	L	51, 52, 54, 55, 56				
8									PLATE, Spare Tire
	05104081AA	2	2, 6	L	11, 12, 14, 15, 16				
		2	2, 6	L	51, 52, 54, 55, 56				

SPRINTER (VA)

SERIES	LINE	BODY	ENGINE	TRANSMISSION
L = LOWLINE	3 = HD DODGE 2WD 6 = Lt. Duty DODGE 4WD 2 = Med. Duty DODGE 2WD 7 = Med. Duty DODGE 4WD	55 = Wagon 140" 54 = Wagon 118" 52 = Wagon 140" 51 = Wagon 118" 12 = Van 140" 11 = Van 118" 06 = Front Section 158" 14 = Van 118" 15 = Van 140" 16 = Van 158" 56 = Wagon 158" 01 = Chassis Forward Control 118" 02 = Chassis Forward Control 140"	EX8 = Engine-2.7L I5 Mercedes Turbo Diesel	DGJ = Transmission-5-Spd. Automatic,W5A580

Jack and Stowage
Figure 22-340

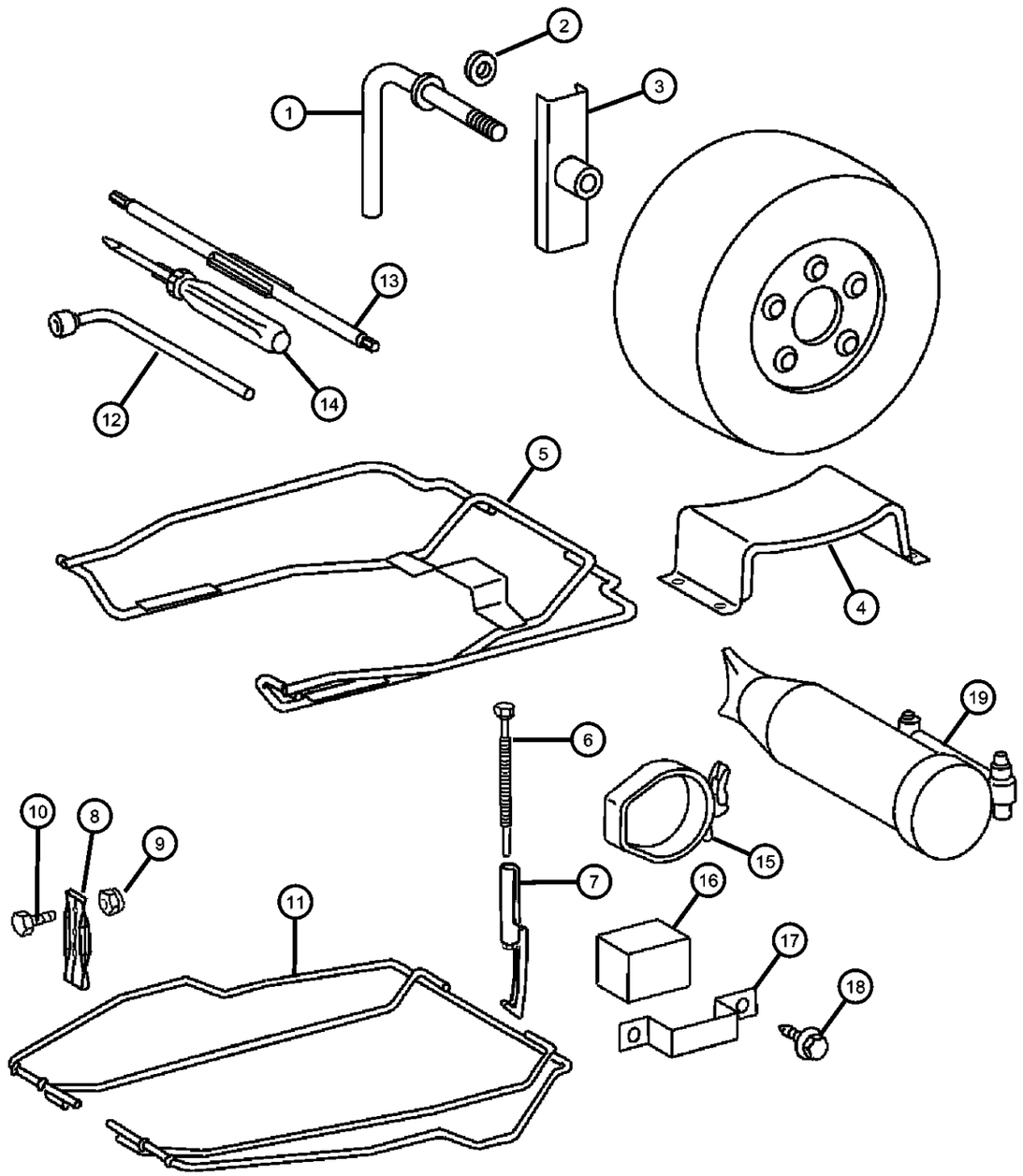

ITEM	PART NUMBER	QTY	LINE	SERIES	BODY	ENGINE	TRANS	TRIM	DESCRIPTION
	05119009AA	2	3, 7	L	12, 15, 16				
9									NUT, Hex
	05126237AA	4	2, 6	L	51, 52, 54, 55, 56				
		4	2, 6	L	01, 02, 06				
		4	2, 6	L	11, 12, 14, 15, 16				
10									BOLT
	05104655AA	1	2, 6	L	11, 12, 14, 15, 16				
		1	3, 7	L	12, 15, 16				
		1	2, 6	L	51, 52, 54, 55, 56				
11									SUPPORT, Spare Tire
	05104077AA	1	2, 6	L	11, 12, 14, 15, 16				
		1	2, 6	L	51, 52, 54, 55, 56				
12									TOOL, Wrench
	05120992AA	1	2, 6	L	51, 52, 54, 55, 56				
		1	2, 6	L	01, 02, 06				
		1	2, 6	L	11, 12, 14, 15, 16				
13									TUBE, Spare Tire Winch
	05120994AA	1	2, 6	L	11, 12, 14, 15, 16				
		1	2, 6	L	51, 52, 54, 55, 56				
		1	3, 7	L	12, 15, 16				
14		1							SCREWDRIVER, (NOT SERVICED)
15									BRACKET, Jack
	05125276AA	1	3, 7	L	12, 15, 16				

SPRINTER (VA)

SERIES	LINE	BODY	ENGINE	TRANSMISSION
L = LOWLINE	3 = HD DODGE 2WD 6 = Lt. Duty DODGE 4WD 2 = Med. Duty DODGE 2WD 7 = Med. Duty DODGE 4WD	55 = Wagon 140" 54 = Wagon 118" 52 = Wagon 140" 51 = Wagon 118" 12 = Van 140" 11 = Van 118" 06 = Front Section 158" 14 = Van 118" 15 = Van 140" 16 = Van 158" 56 = Wagon 158" 01 = Chassis Forward Control 118" 02 = Chassis Forward Control 140"	EX8 = Engine-2.7L I5 Mercedes Turbo Diesel	DGJ = Transmission-5-Spd. Automatic,W5A580

AR = use ase required - = Non illustrrated part

Jack and Stowage
Figure 22-340

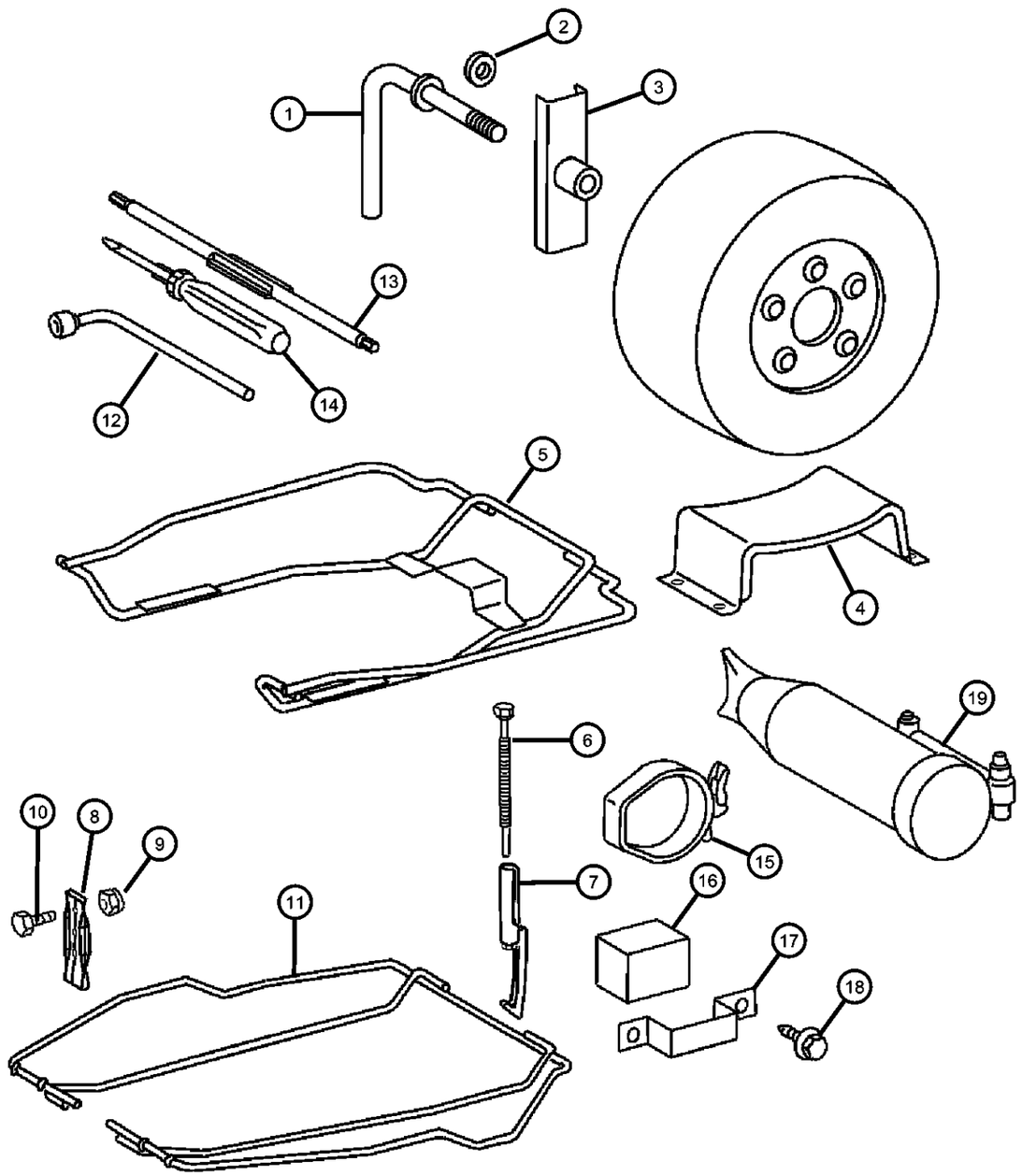

ITEM	PART NUMBER	QTY	LINE	SERIES	BODY	ENGINE	TRANS	TRIM	DESCRIPTION
	05125275AA	1	2, 6	L	11, 12, 14, 15, 16				
		1	2, 6	L	51, 52, 54, 55, 56				
16									PAD, Jack
	05133292AA	1	2, 6	L	11, 12, 14, 15, 16				
		1	2, 6	L	51, 52, 54, 55, 56				
		1	3, 7	L	12, 15, 16				
17									BRACKET, Jack
	05133293AA	1	2, 6	L	51, 52, 54, 55, 56				
		1	3, 7	L	12, 15, 16				
		1	2, 6	L	11, 12, 14, 15, 16				
18									SCREW, Self-Tapping
	05133295AA	2	2, 6	L	11, 12, 14, 15, 16				
		2	2, 6	L	51, 52, 54, 55, 56				
		2	3, 7	L	12, 15, 16				
19									JACK
	05104587AA	1	2, 6	L	56, 51, 52, 54, 55				Hydraulic
		1	3, 7	L	12, 15, 16				Hydraulic
		1	2, 6	L	11, 12, 14, 15, 16				Hydraulic

SPRINTER (VA)

SERIES	LINE	BODY	ENGINE	TRANSMISSION
L = LOWLINE	3 = HD DODGE 2WD 6 = Lt. Duty DODGE 4WD 2 = Med. Duty DODGE 2WD 7 = Med. Duty DODGE 4WD	55 = Wagon 140" 54 = Wagon 118" 52 = Wagon 140" 51 = Wagon 118" 12 = Van 140" 11 = Van 118" 06 = Front Section 158" 14 = Van 118" 15 = Van 140" 16 = Van 158" 56 = Wagon 158" 01 = Chassis Forward Control 118" 02 = Chassis Forward Control 140"	EX8 = Engine-2.7L I5 Mercedes Turbo Diesel	DGJ = Transmission-5-Spd. Automatic,W5A580

AR = use ase required - = Non illustrrated part

Wheel, Spare
Figure 22-430

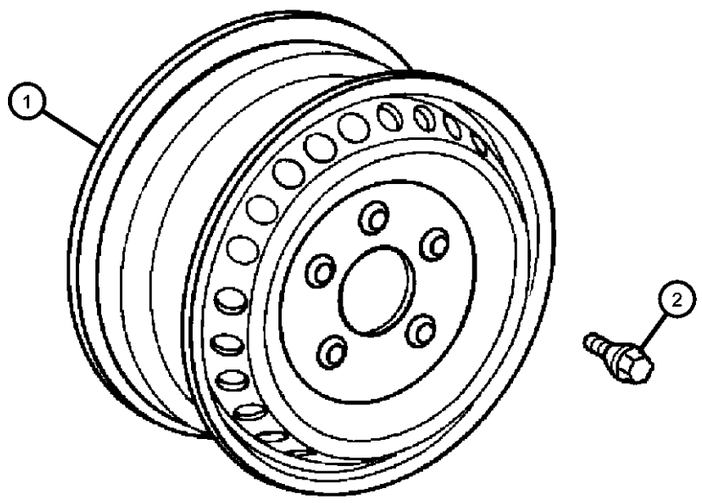

ITEM	PART NUMBER	QTY	LINE	SERIES	BODY	ENGINE	TRANS	TRIM	DESCRIPTION
1									WHEEL
	05104581AA	1	3, 7	L	12, 15, 16				
	05103605AA	1	2, 6	L	11, 12, 14, 15, 16				[WCL+WWW+WLB+AMC+4XS]
	05128907AA	1	2, 6	L	51, 52, 54, 55, 56				[WCL+WWA+WLB]
	05118929AA	1	2, 6	L	01, 02, 06				[WCL+WLB]
		1	2, 6	L	11, 12, 14, 15, 16				[WCL+WLB]
		1	2, 6	L	51, 52, 54, 55, 56				[WCL+WLB]
		1	2, 6	L	01, 02, 06				[WCL+WWA+WLB]
		1	2, 6	L	11, 12, 14, 15, 16				[WCL+WWA+WLB]
	05128908AA	1	2, 6	L	01, 02, 06				[WDG+WWA+WLB,4Z1,4XS]
		1	2, 6	L	11, 12, 14, 15, 16				[WDG+WWA+WLB,4Z1,4XS]
		1	2, 6	L	51, 52, 54, 55, 56				[WDG+WWA+WLB,4Z1,4XS]
	05128911AA	1	2, 6	L	01, 02, 06				[WDG+WLB,4Z1,4XS]
		1	2, 6	L	11, 12, 14, 15, 16				[WDG+WLB,4Z1,4XS]
		1	2, 6	L	51, 52, 54, 55, 56				[WDG+WLB,4Z1,4XS]
2									BOLT
	05104080AA	20	2, 6	L	11, 12, 14, 15, 16				
		20	2, 6	L	51, 52, 54, 55, 56				

SPRINTER (VA)

SERIES	LINE	BODY	ENGINE	TRANSMISSION
L = LOWLINE	3 = HD DODGE 2WD 6 = Lt. Duty DODGE 4WD 2 = Med. Duty DODGE 2WD 7 = Med. Duty DODGE 4WD	55 = Wagon 140" 54 = Wagon 118" 52 = Wagon 140" 51 = Wagon 118" 12 = Van 140" 11 = Van 118" 06 = Front Section 158" 14 = Van 118" 15 = Van 140" 16 = Van 158" 56 = Wagon 158" 01 = Chassis Forward Control 118" 02 = Chassis Forward Control 140"	EX8 = Engine-2.7L I5 Mercedes Turbo Diesel	DGJ = Transmission-5-Spd. Automatic,W5A580

AR = use ase required - = Non illustrrated part

Group - 23D

Wiper/Lock Cylinder and Keys

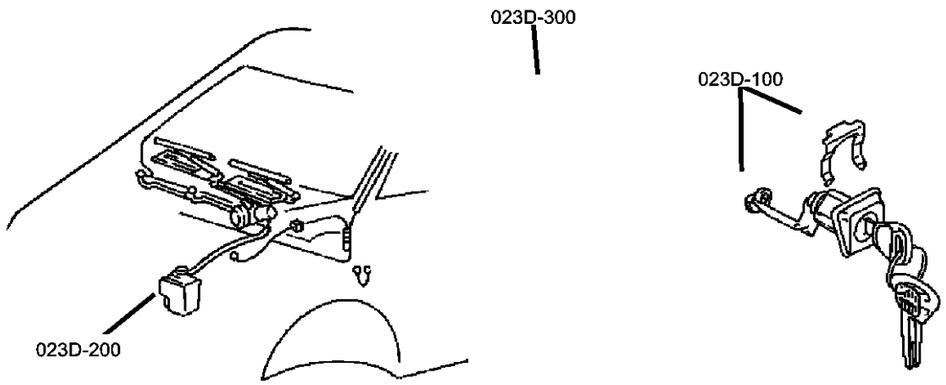

23D-100 Lock Cylinders and Keys	23D-200 Windshield Wiper and Washer Systems		
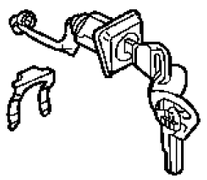	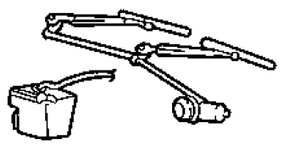		

Group - 23D Wiper/Lock Cylinder and Keys

Illustration Title — Group-Fig. No.

Lock Cylinders and Keys
Lock Cylinders & Components ..... Fig. 23D - 105

Windshield Wiper and Washer Systems
Windshield Wiper & Washer ..... Fig. 23D - 205

Lock Cylinders & Components
Figure 23D-105

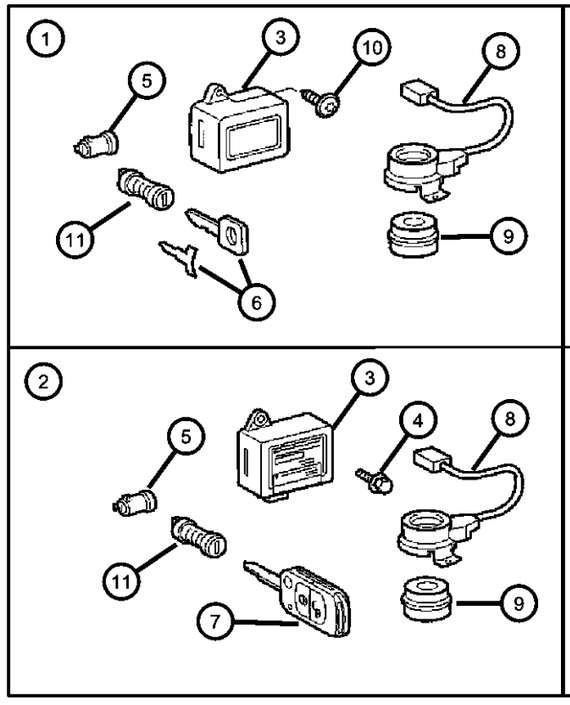

ITEM	PART NUMBER	QTY	LINE	SERIES	BODY	ENGINE	TRANS	TRIM	DESCRIPTION
1		20							LOCK, Door, For this package call 866 769 8092 or use STAR Parts Web Site order form, (NOT SERVICED)
2		20							LOCK, Door, For this package call 866 769 8092 or use STAR Parts Web Site order form, (NOT SERVICED)
3									WSP CONTROL UNIT, Remote Control Key
	05135344AA	1	2, 6		01, 02, 06				Without Salescode [JPB] Power Locks
		1	2, 6		11, 12, 14, 15, 16				Without Salescode [JPB] Power Locks
	05135345AA	1	3, 7		12, 15, 16				With Salescode [JPB] Power locks
		1	2, 6		01, 02, 06				With Salescode [JPB] Power Locks
4									BOLT, Door
	05126268AA	2	2, 6		11, 12, 14, 15, 16				
		2	2, 6		51, 52, 54, 55, 56				
		2	3, 7		12, 15, 16				
5									CYLINDER, Ignition Lock
	05114365AA	1	2, 6		11, 12, 14, 15, 16				
		1	2, 6		51, 52, 54, 55, 56				
		1	3, 7		12, 15, 16				
6									KEY
	05114362AA	2	2, 6		11, 12, 14, 15, 16				Replacement Blade Only For Remote Key Sales Code [JPB]
		2	2, 6		51, 52, 54, 55, 56				Replacement Blade Only For Remote Key Sales Code [JPB]
		2	3, 7		12, 15, 16				Replacement Blade Only For Remote Key Sales Code [JPB]

SPRINTER (VA)

SERIES	LINE	BODY	ENGINE	TRANSMISSION
L = LOWLINE	3 = HD DODGE 2WD 6 = Lt. Duty DODGE 4WD 2 = Med. Duty DODGE 2WD 7 = Med. Duty DODGE 4WD	55 = Wagon 140" 54 = Wagon 118" 52 = Wagon 140" 51 = Wagon 118" 12 = Van 140" 11 = Van 118" 06 = Front Section 158" 14 = Van 118" 15 = Van 140" 16 = Van 158" 56 = Wagon 158" 01 = Chassis Forward Control 118" 02 = Chassis Forward Control 140"	EX8 = Engine-2.7L I5 Mercedes Turbo Diesel	DGJ = Transmission-5-Spd. Automatic,W5A580

Lock Cylinders & Components
Figure 23D-105

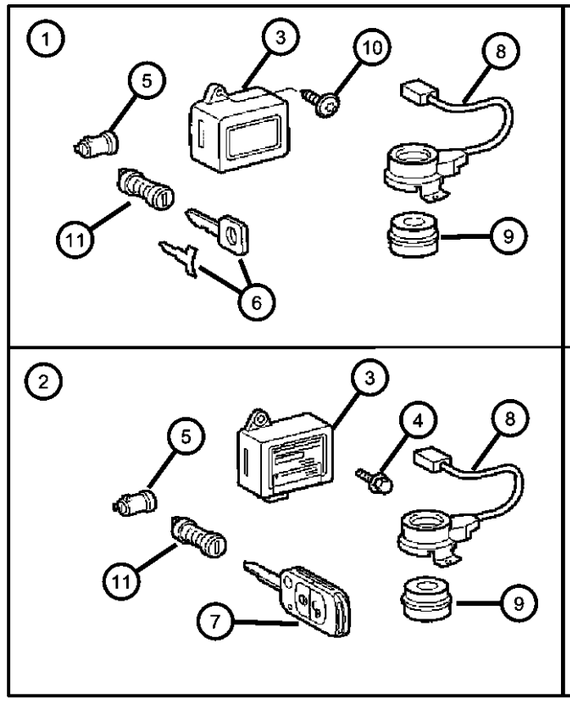

ITEM	PART NUMBER	QTY	LINE	SERIES	BODY	ENGINE	TRANS	TRIM	DESCRIPTION
	05114363AA	1	2, 6		11, 12, 14, 15, 16				Key With No Remote WithOut Sales Code [GXY] Or [JPB]. Can Be Used As A Spare For Sales Code [JPB]
		1	2, 6		52, 54, 55, 56, 51				Key With No Remote WithOut Sales Code [GXY] Or [JPB]. Can Be Used As A Spare For Sales Code [JPB]
7									KEY, Remote Control Complete
	05114361AA	2	2, 6		11, 12, 14, 15, 16				Remote Key With Blade For Sales Code [JPB] Only
		2	2, 6		51, 52, 54, 55, 56				Remote Key With Blade For Sales Code [JPB] Only
		2	3, 7		12, 15, 16				Remote Key With Blade For Sales Code [JPB] Only
8									TRANSPONDER, Steering Wheel
	05120812AA	1	2, 6		01, 02, 06				
		1	2, 6		11, 12, 14, 15, 16				
		1	2, 6		51, 52, 54, 55, 56				
		1	3, 7		02, 06				
9									RING
	05104593AA	1	3, 7		12, 15, 16				
		1	2, 6		01, 02, 06				
		1	2, 6		11, 12, 14, 15, 16				
		1	2, 6		51, 52, 54, 55, 56				
10									SCREW, Tapping
	06104574AA	3	2, 6		01, 02, 06				
		2	2, 6		11, 12, 14, 15, 16				
		2	2, 6		51, 52, 54, 55, 56				

SPRINTER (VA)

SERIES	LINE	BODY	ENGINE	TRANSMISSION
L = LOWLINE	3 = HD DODGE 2WD 6 = Lt. Duty DODGE 4WD 2 = Med. Duty DODGE 2WD 7 = Med. Duty DODGE 4WD	55 = Wagon 140" 54 = Wagon 118" 52 = Wagon 140" 51 = Wagon 118" 12 = Van 140" 11 = Van 118" 06 = Front Section 158" 14 = Van 118" 15 = Van 140" 16 = Van 158" 56 = Wagon 158" 01 = Chassis Forward Control 118" 02 = Chassis Forward Control 140"	EX8 = Engine-2.7L I5 Mercedes Turbo Diesel	DGJ = Transmission-5-Spd. Automatic,W5A580

Lock Cylinders & Components
Figure 23D-105

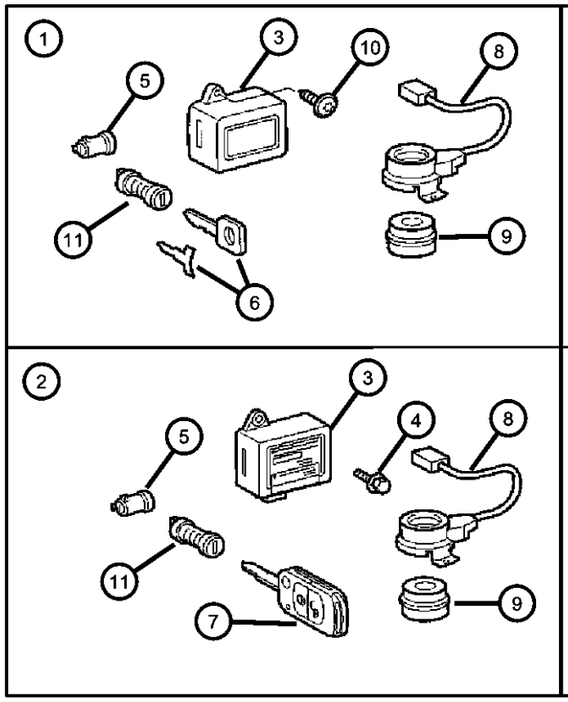

ITEM	PART NUMBER	QTY	LINE	SERIES	BODY	ENGINE	TRANS	TRIM	DESCRIPTION
		2	3, 7		12, 15, 16				
11									CYLINDER, Door Lock
	05114364AA	1	2, 6		01, 02, 06				
		1	2, 6		11, 12, 14, 15, 16				
		1	2, 6		51, 52, 54, 55, 56				
		1	3, 7		12, 15, 16				
-12	05127746AA	4	2, 6		11, 12, 14, 15, 16				KEY, Blank, For Ups Vechiles Only

SPRINTER (VA)

SERIES	LINE	BODY	ENGINE	TRANSMISSION
L = LOWLINE	3 = HD DODGE 2WD 6 = Lt. Duty DODGE 4WD 2 = Med. Duty DODGE 2WD 7 = Med. Duty DODGE 4WD	55 = Wagon 140" 54 = Wagon 118" 52 = Wagon 140" 51 = Wagon 118" 12 = Van 140" 11 = Van 118" 06 = Front Section 158" 14 = Van 118" 15 = Van 140" 16 = Van 158" 56 = Wagon 158" 01 = Chassis Forward Control 118" 02 = Chassis Forward Control 140"	EX8 = Engine-2.7L I5 Mercedes Turbo Diesel	DGJ = Transmission-5-Spd. Automatic,W5A580

Windshield Wiper & Washer
Figure 23D-205

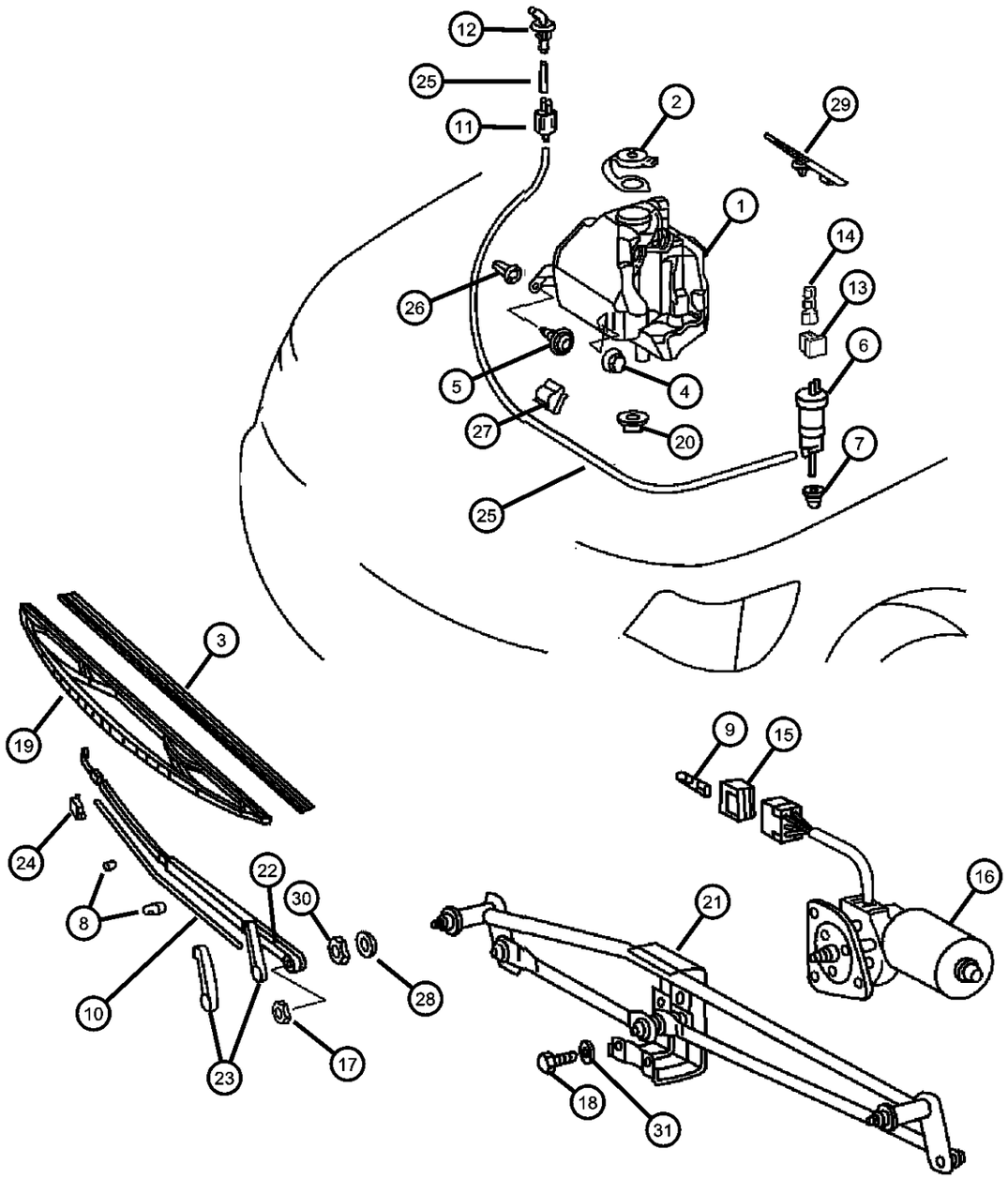

ITEM	PART NUMBER	QTY	LINE	SERIES	BODY	ENGINE	TRANS	TRIM	DESCRIPTION
1									RESERVOIR, Washer
	05104503AA	1	2, 6		11, 12, 14, 15, 16				
		1	2, 6		51, 52, 54, 55, 56				
		1	3, 7		12, 15, 16				
2									CAP, Washer Reservoir
	05125059AA	1	2, 6		11, 12, 14, 15, 16				
		1	2, 6		51, 52, 54, 55, 56				
		1	3, 7		12, 15, 16				
3									REFILL, Wiper Blade
	05133992AA	2	2, 6		11, 12, 14, 15, 16				
	WBW00024AD								Mopar Alternative Winter Wiper Blades
	WBW00022AD								Mopar Alternative Winter Wiper Blades
	WB000024AE								Mopar V-Line Alternative Part
	WB000022AE								Mopar V-Line Alternative Part
	WB-BLU022AA								Mopar Alternative Color Wiper Blade (Blue)
	WBRED022AA								Mopar Alternative Color Wiper Blade (Red)
	WBYEL022AA								Mopar Alternative Color Wiper Blade (Yellow)
	WB-WHI022AA								Mopar Alternative Color Wiper Blade (White)
	WB-CAR022AA								Mopar Alternative Color Wiper Blade (Carbon Fiber)
	WB-BLU024AA								Mopar Alternative Color Wiper Blade (Blue)
	WBRED024AA								Mopar Alternative Color Wiper Blade (Red)
	WBYEL024AA								Mopar Alternative Color Wiper Blade (Yellow)

SPRINTER (VA)

SERIES	LINE	BODY	ENGINE	TRANSMISSION
L = LOWLINE	3 = HD DODGE 2WD 6 = Lt. Duty DODGE 4WD 2 = Med. Duty DODGE 2WD 7 = Med. Duty DODGE 4WD	55 = Wagon 140" 54 = Wagon 118" 52 = Wagon 140" 51 = Wagon 118" 12 = Van 140" 11 = Van 118" 06 = Front Section 158" 14 = Van 118" 15 = Van 140" 16 = Van 158" 56 = Wagon 158" 01 = Chassis Forward Control 118" 02 = Chassis Forward Control 140"	EX8 = Engine-2.7L I5 Mercedes Turbo Diesel	DGJ = Transmission-5-Spd. Automatic,W5A580

AR = use ase required - = Non illustrrated part

Windshield Wiper & Washer
Figure 23D-205

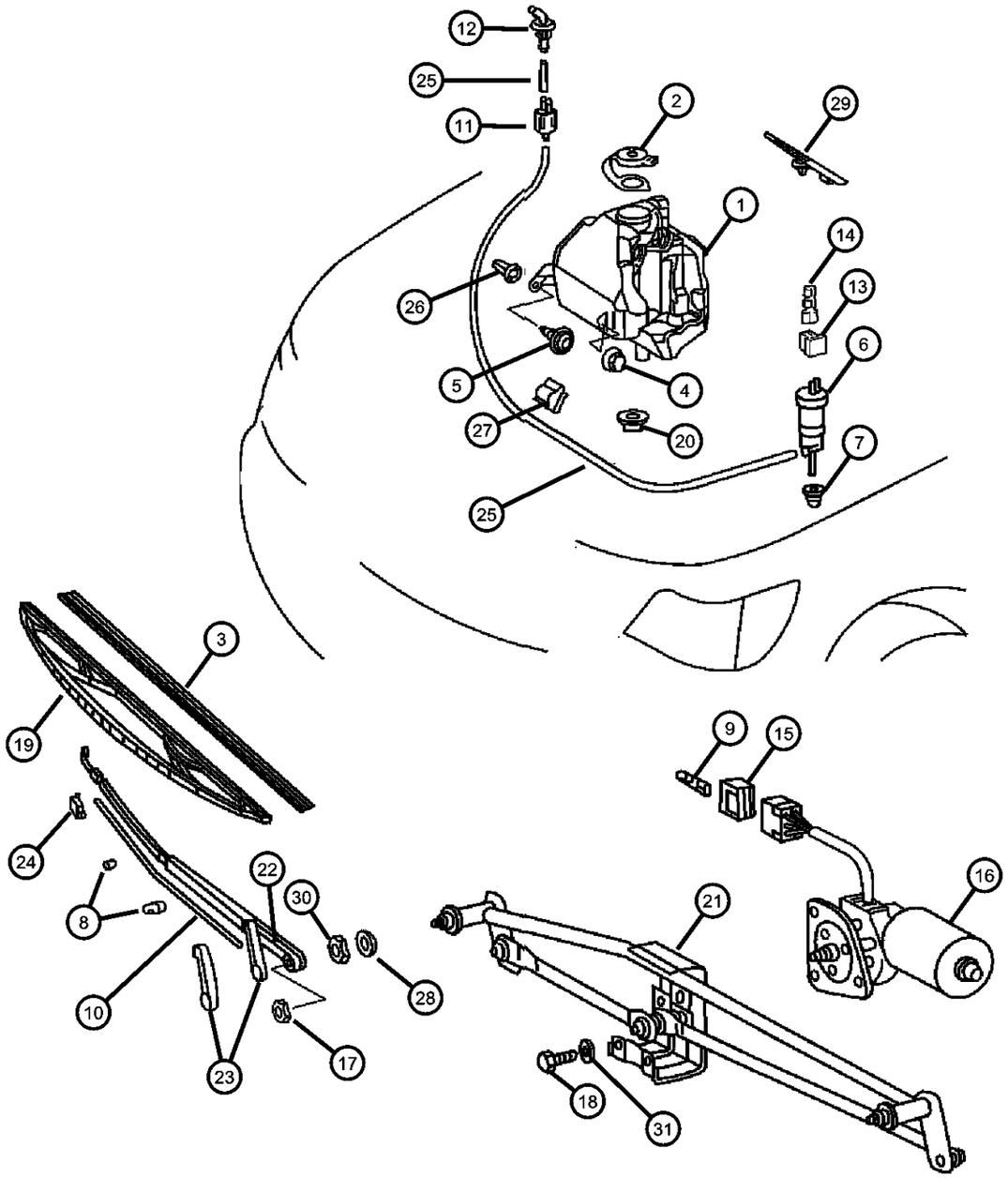

ITEM	PART NUMBER	QTY	LINE	SERIES	BODY	ENGINE	TRANS	TRIM	DESCRIPTION
	WB-WHI024AA								Mopar Alternative Color Wiper Blade (White)
	WB-CAR024AA								Mopar Alternative Color Wiper Blade (Carbon Fiber)
		2	2, 6		51, 52, 54, 55, 56				
	WBW00024AD								Mopar Alternative Winter Wiper Blades
	WBW00022AD								Mopar Alternative Winter Wiper Blades
	WB000024AE								Mopar V-Line Alternative Part
	WB000022AE								Mopar V-Line Alternative Part
	WB-BLU022AA								Mopar Alternative Color Wiper Blade (Blue)
	WBRED022AA								Mopar Alternative Color Wiper Blade (Red)
	WBYEL022AA								Mopar Alternative Color Wiper Blade (Yellow)
	WB-WHI022AA								Mopar Alternative Color Wiper Blade (White)
	WB-CAR022AA								Mopar Alternative Color Wiper Blade (Carbon Fiber)
	WB-BLU024AA								Mopar Alternative Color Wiper Blade (Blue)
	WBRED024AA								Mopar Alternative Color Wiper Blade (Red)
	WBYEL024AA								Mopar Alternative Color Wiper Blade (Yellow)
	WB-WHI024AA								Mopar Alternative Color Wiper Blade (White)
	WB-CAR024AA								Mopar Alternative Color Wiper Blade (Carbon Fiber)
		2	3, 7		12, 15, 16				
	WBW00024AD								Mopar Alternative Winter Wiper Blades
	WBW00022AD								Mopar Alternative Winter Wiper Blades

SPRINTER (VA)

SERIES	LINE	BODY	ENGINE	TRANSMISSION
L = LOWLINE	3 = HD DODGE 2WD 6 = Lt. Duty DODGE 4WD 2 = Med. Duty DODGE 2WD 7 = Med. Duty DODGE 4WD	55 = Wagon 140" 54 = Wagon 118" 52 = Wagon 140" 51 = Wagon 118" 12 = Van 140" 11 = Van 118" 06 = Front Section 158" 14 = Van 118" 15 = Van 140" 16 = Van 158" 56 = Wagon 158" 01 = Chassis Forward Control 118" 02 = Chassis Forward Control 140"	EX8 = Engine-2.7L I5 Mercedes Turbo Diesel	DGJ = Transmission-5-Spd. Automatic,W5A580

Windshield Wiper & Washer
Figure 23D-205

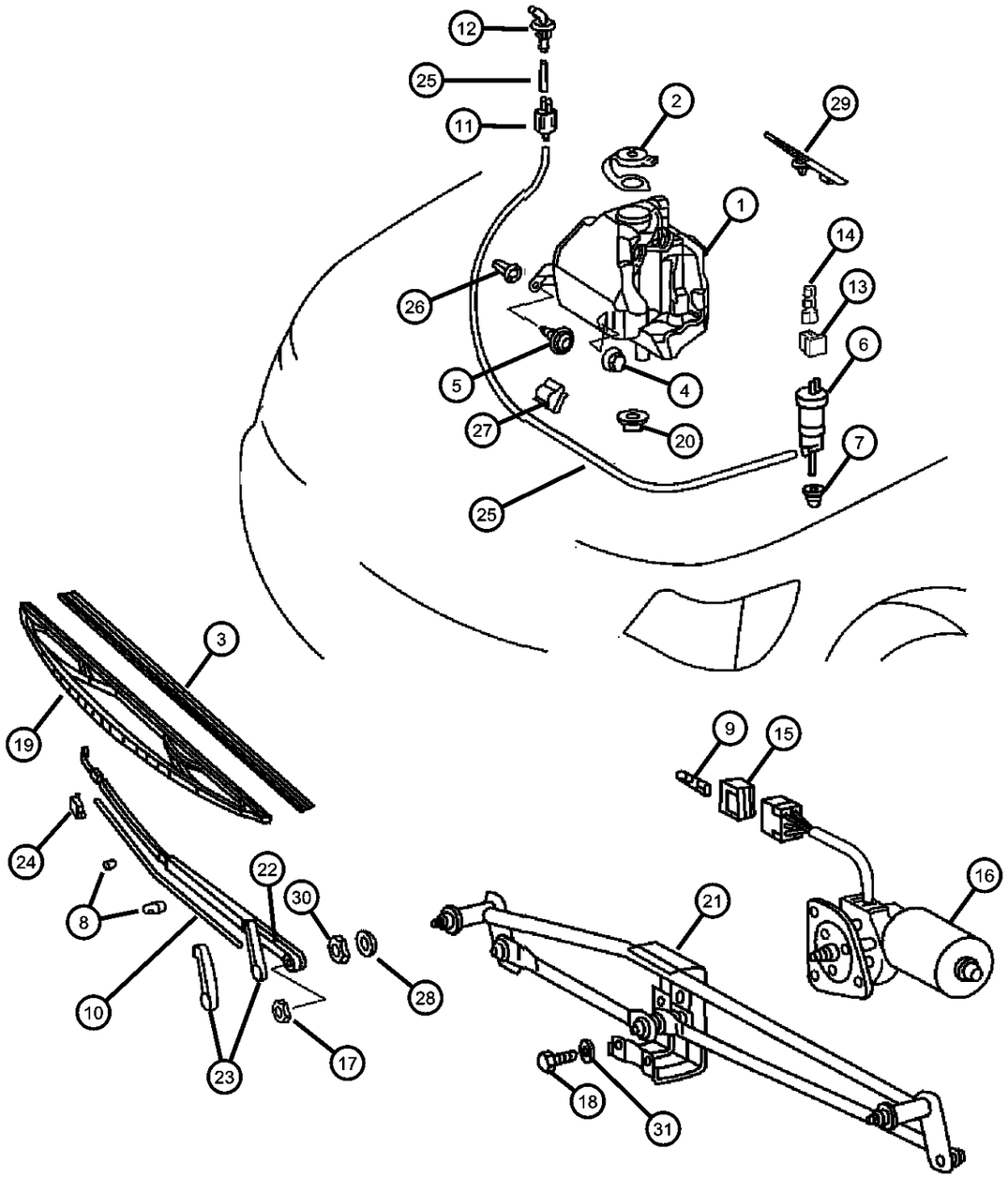

ITEM	PART NUMBER	QTY	LINE	SERIES	BODY	ENGINE	TRANS	TRIM	DESCRIPTION
	WB000024AE								Mopar V-Line Alternative Part
	WB000022AE								Mopar V-Line Alternative Part
	WB-BLU022AA								Mopar Alternative Color Wiper Blade (Blue)
	WBRED022AA								Mopar Alternative Color Wiper Blade (Red)
	WBYEL022AA								Mopar Alternative Color Wiper Blade (Yellow)
	WB-WHI022AA								Mopar Alternative Color Wiper Blade (White)
	WB-CAR022AA								Mopar Alternative Color Wiper Blade (Carbon Fiber)
	WB-BLU024AA								Mopar Alternative Color Wiper Blade (Blue)
	WBRED024AA								Mopar Alternative Color Wiper Blade (Red)
	WBYEL024AA								Mopar Alternative Color Wiper Blade (Yellow)
	WB-WHI024AA								Mopar Alternative Color Wiper Blade (White)
	WB-CAR024AA								Mopar Alternative Color Wiper Blade (Carbon Fiber)
4									NUT, Hex, M6
	05096978AA	3	2, 6		11, 12, 14, 15, 16				Resevoir Attach
		3	2, 6		51, 52, 54, 55, 56				Resevoir Attach
		1	3, 7		12, 15, 16				Resevoir Attach
5									SCREW
	06104582AA	4	2, 6		51, 52, 54, 55, 56				Resevoir Attach
		4	3, 7		12, 15, 16				Resevoir Attach
		2	2, 6		11, 12, 14, 15, 16				
6									PUMP, Washer, Windshield
	05124954AA	1	2, 6		01, 02, 06				Stamp nbr. A0008604826

SPRINTER (VA)

SERIES	LINE	BODY	ENGINE	TRANSMISSION
L = LOWLINE	3 = HD DODGE 2WD 6 = Lt. Duty DODGE 4WD 2 = Med. Duty DODGE 2WD 7 = Med. Duty DODGE 4WD	55 = Wagon 140" 54 = Wagon 118" 52 = Wagon 140" 51 = Wagon 118" 12 = Van 140" 11 = Van 118" 06 = Front Section 158" 14 = Van 118" 15 = Van 140" 16 = Van 158" 56 = Wagon 158" 01 = Chassis Forward Control 118" 02 = Chassis Forward Control 140"	EX8 = Engine-2.7L I5 Mercedes Turbo Diesel	DGJ = Transmission-5-Spd. Automatic,W5A580

AR = use ase required - = Non illustrrated part

Windshield Wiper & Washer
Figure 23D-205

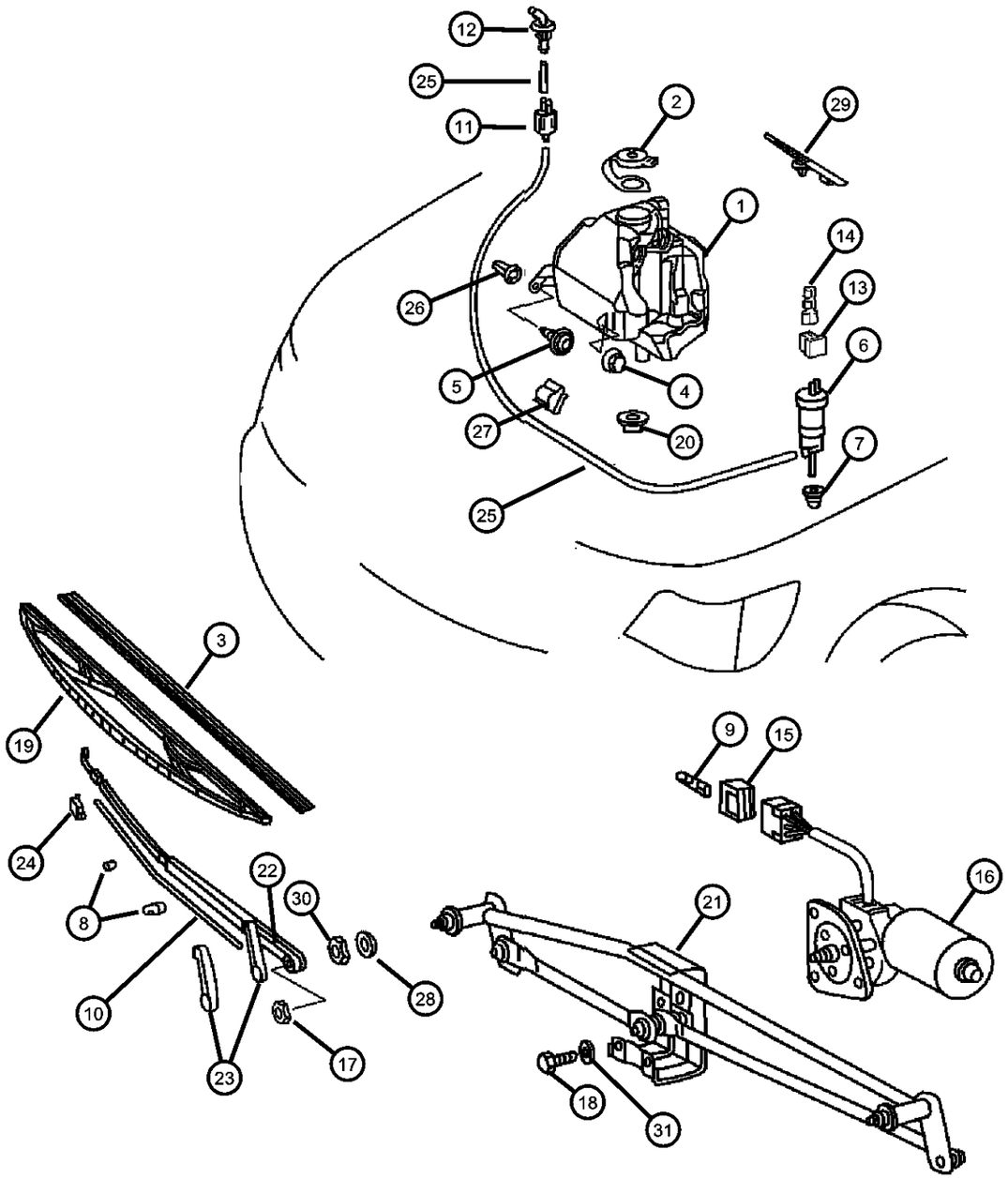

ITEM	PART NUMBER	QTY	LINE	SERIES	BODY	ENGINE	TRANS	TRIM	DESCRIPTION
		1	2, 6		11, 12, 14, 15, 16				Stamp nbr. A0008604826
	05103700AA	1	2, 6		01, 02, 06				Stamp nbr. A0008603326
		1	2, 6		11, 12, 14, 15, 16				Stamp nbr. A0008603326
		1	2, 6		51, 52, 54, 55, 56				Stamp nbr. A0008603326
		1	3, 7		02, 06				Stamp nbr. A0008603326
		1	2, 6		51, 52, 54, 55, 56				Stamp nbr. A0008604826
		1	3, 7		02, 06				Stamp nbr. A0008604826
		1	3, 7		12, 15, 16				Stamp nbr. A0008604826
7									GROMMET, Windshield Washer Pump
	05125077AA	1	2, 6		11, 12, 14, 15, 16				
		1	2, 6		51, 52, 54, 55, 56				
		1	3, 7		12, 15, 16				
8									CLIP, Washer Hose
	05133994AA	1	2, 6		11, 12, 14, 15, 16				Upper Arm
		1	2, 6		51, 52, 54, 55, 56				Upper Arm
		1	3, 7		12, 15, 16				Upper Arm
	05133995AA	1	2, 6		11, 12, 14, 15, 16				Lower Arm
		1	2, 6		51, 52, 54, 55, 56				Lower Arm
		1	3, 7		12, 15, 16				Lower Arm
9									TERMINAL, Female
	05133394AA	1	3, 7		12, 15, 16				
	05133359AA	99	2, 6		11, 12, 14, 15, 16				

SPRINTER (VA)

SERIES	LINE	BODY	ENGINE	TRANSMISSION
L = LOWLINE	3 = HD DODGE 2WD 6 = Lt. Duty DODGE 4WD 2 = Med. Duty DODGE 2WD 7 = Med. Duty DODGE 4WD	55 = Wagon 140" 54 = Wagon 118" 52 = Wagon 140" 51 = Wagon 118" 12 = Van 140" 11 = Van 118" 06 = Front Section 158" 14 = Van 118" 15 = Van 140" 16 = Van 158" 56 = Wagon 158" 01 = Chassis Forward Control 118" 02 = Chassis Forward Control 140"	EX8 = Engine-2.7L I5 Mercedes Turbo Diesel	DGJ = Transmission-5-Spd. Automatic,W5A580

Windshield Wiper & Washer
Figure 23D-205

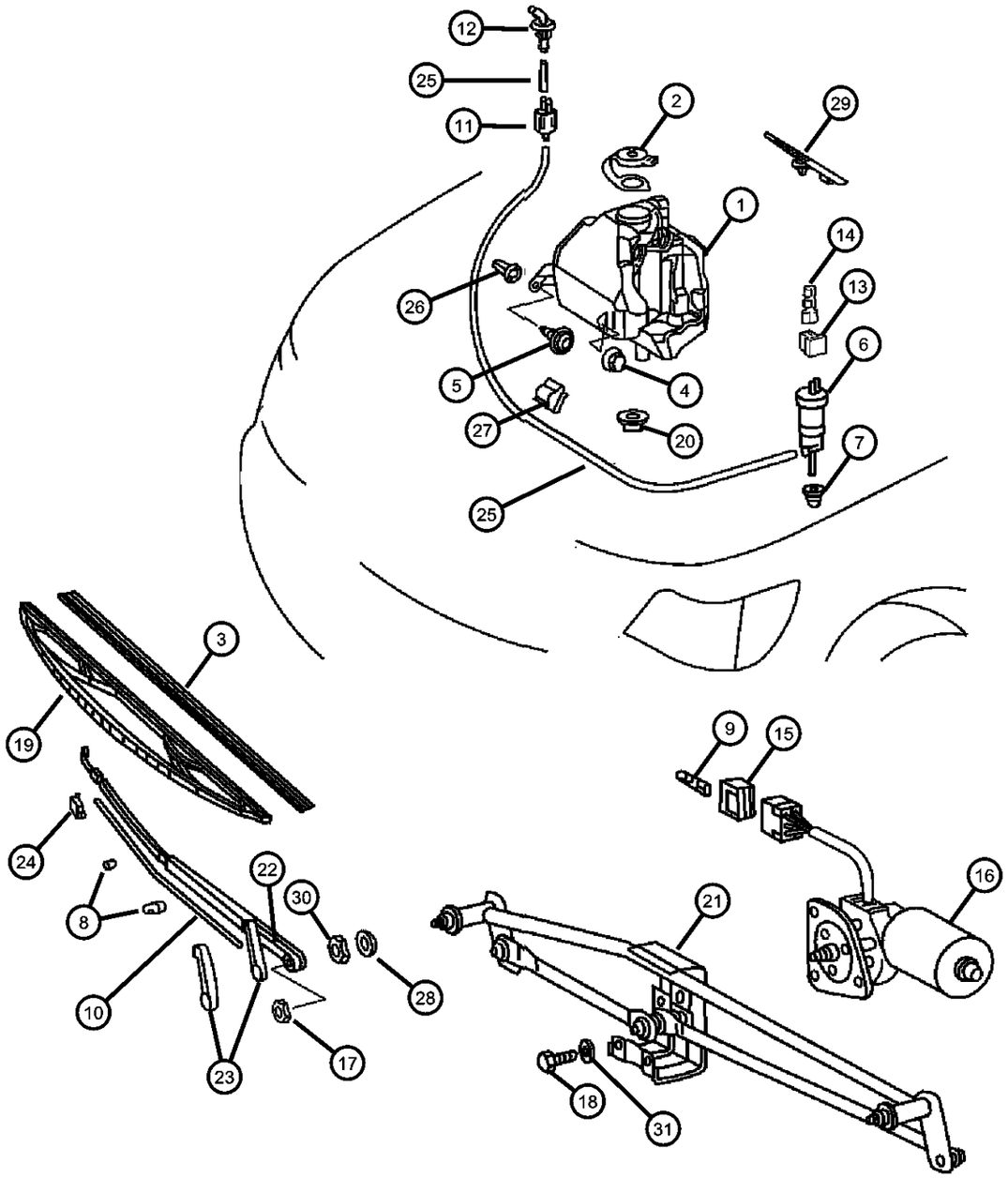

ITEM	PART NUMBER	QTY	LINE	SERIES	BODY	ENGINE	TRANS	TRIM	DESCRIPTION
		99	2, 6		51, 52, 54, 55, 56				
10									HOSE, Windshield Washer
	05133993AA	900	2, 6		11, 12, 14, 15, 16				5 Meters Long
		900	2, 6		51, 52, 54, 55, 56				5 Meters Long
		900	3, 7		12, 15, 16				5 Meters Long
11									CHECK VALVE, Washer
	05124963AA	1	2, 6		11, 12, 14, 15, 16				
		1	2, 6		51, 52, 54, 55, 56				
		1	3, 7		12, 15, 16				
12									CONNECTOR, Washer Hose, Elbow Type
	05125061AA	2	2, 6		11, 12, 14, 15, 16				
		2	2, 6		51, 52, 54, 55, 56				
		2	3, 7		12, 15, 16				
13									INSULATOR, 2 Way Female
	05103754AA	1	2, 6		11, 12, 14, 15, 16				
		1	2, 6		51, 52, 54, 55, 56				
		1	3, 7		12, 15, 16				
14									TERMINAL, Female
	05114451AA	99	2, 6		11, 12, 14, 15, 16				
		99	2, 6		01, 02, 06				
		99	2, 6		51, 52, 54, 55, 56				
		99	3, 7		12, 15, 16				
15									CONNECTOR

SPRINTER (VA)

SERIES	LINE	BODY	ENGINE	TRANSMISSION
L = LOWLINE	3 = HD DODGE 2WD 6 = Lt. Duty DODGE 4WD 2 = Med. Duty DODGE 2WD 7 = Med. Duty DODGE 4WD	55 = Wagon 140" 54 = Wagon 118" 52 = Wagon 140" 51 = Wagon 118" 12 = Van 140" 11 = Van 118" 06 = Front Section 158" 14 = Van 118" 15 = Van 140" 16 = Van 158" 56 = Wagon 158" 01 = Chassis Forward Control 118" 02 = Chassis Forward Control 140"	EX8 = Engine-2.7L I5 Mercedes Turbo Diesel	DGJ = Transmission-5-Spd. Automatic,W5A580

AR = use ase required - = Non illustrrated part

Windshield Wiper & Washer
Figure 23D-205

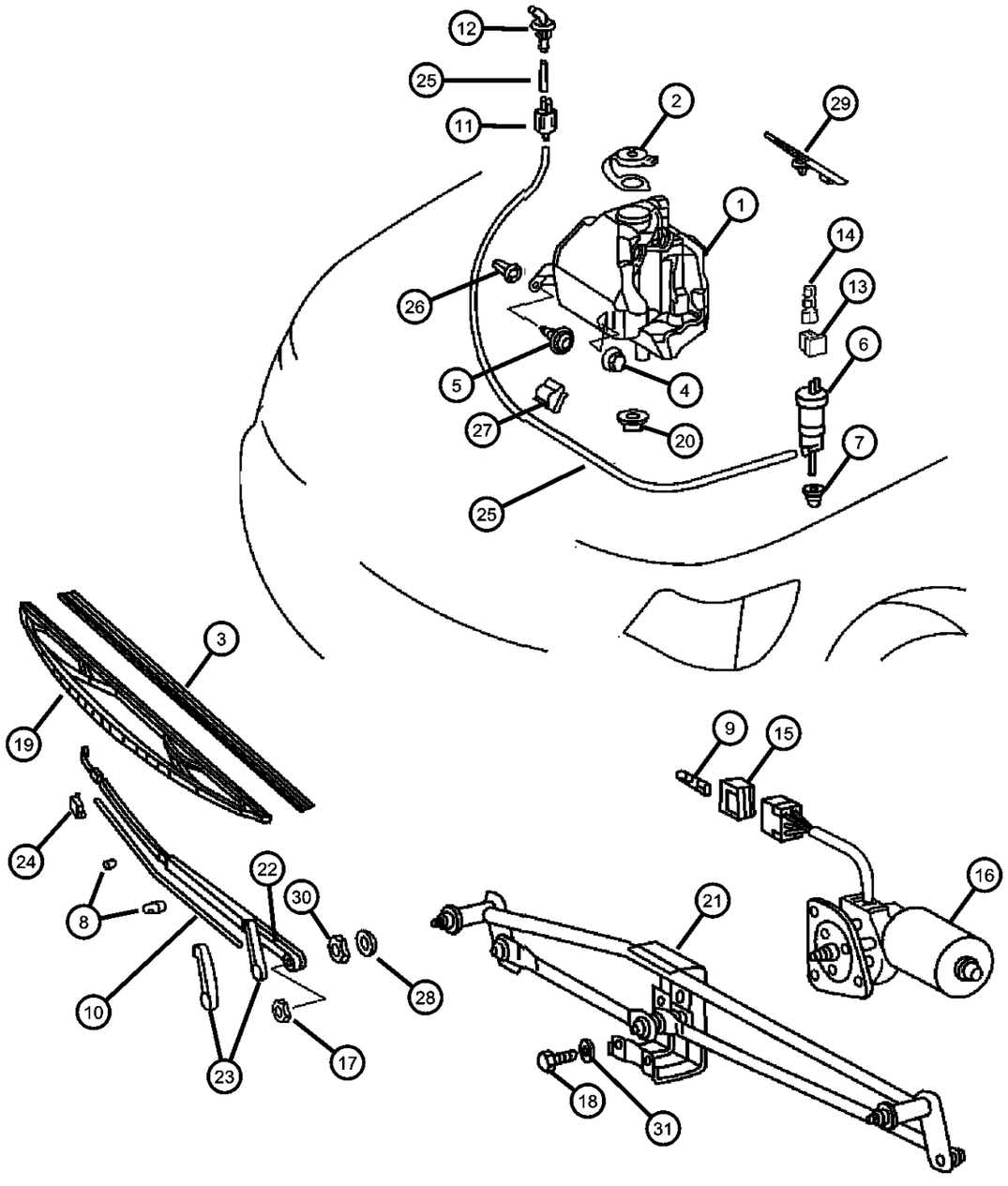

ITEM	PART NUMBER	QTY	LINE	SERIES	BODY	ENGINE	TRANS	TRIM	DESCRIPTION
	05103870AA	1	2, 6		11, 12, 14, 15, 16				
		1	2, 6		51, 52, 54, 55, 56				
		1	3, 7		12, 15, 16				
16	05103561AA	1	2, 3, 6, 7						MOTOR, Wiper
17									NUT, M8
	06104709AA	1	2, 6		11, 12, 14, 15, 16				Wiper Arm to Bearing
		1	2, 6		51, 52, 54, 55, 56				Wiper Arm to Bearing
		1	3, 7		12, 15, 16				Wiper Arm to Bearing
18									SCREW
	06104179AA	1	2, 6		11, 12, 14, 15, 16				
		1	2, 6		51, 52, 54, 55, 56				
		1	3, 7		12, 15, 16				
19									WIPER BLADE
	05103543AA	1	2, 6		01, 02, 06				Passenger Side
	WBW00022AD								Mopar Alternative Winter Wiper Blades
	WB000022AE								Mopar V-Line Alternative Part
	WB-BLU022AA								Mopar Alternative Color Wiper Blade (Blue)
	WBRED022AA								Mopar Alternative Color Wiper Blade (Red)
	WBYEL022AA								Mopar Alternative Color Wiper Blade (Yellow)
	WB-WHI022AA								Mopar Alternative Color Wiper Blade (White)
	WB-CAR022AA								Mopar Alternative Color Wiper Blade (Carbon Fiber)
		1	2, 6		11, 12, 14, 15, 16				Passenger Side

SPRINTER (VA)

SERIES	LINE	BODY	ENGINE	TRANSMISSION
L = LOWLINE	3 = HD DODGE 2WD 6 = Lt. Duty DODGE 4WD 2 = Med. Duty DODGE 2WD 7 = Med. Duty DODGE 4WD	55 = Wagon 140" 54 = Wagon 118" 52 = Wagon 140" 51 = Wagon 118" 12 = Van 140" 11 = Van 118" 06 = Front Section 158" 14 = Van 118" 15 = Van 140" 16 = Van 158" 56 = Wagon 158" 01 = Chassis Forward Control 118" 02 = Chassis Forward Control 140"	EX8 = Engine-2.7L I5 Mercedes Turbo Diesel	DGJ = Transmission-5-Spd. Automatic,W5A580

Windshield Wiper & Washer
Figure 23D-205

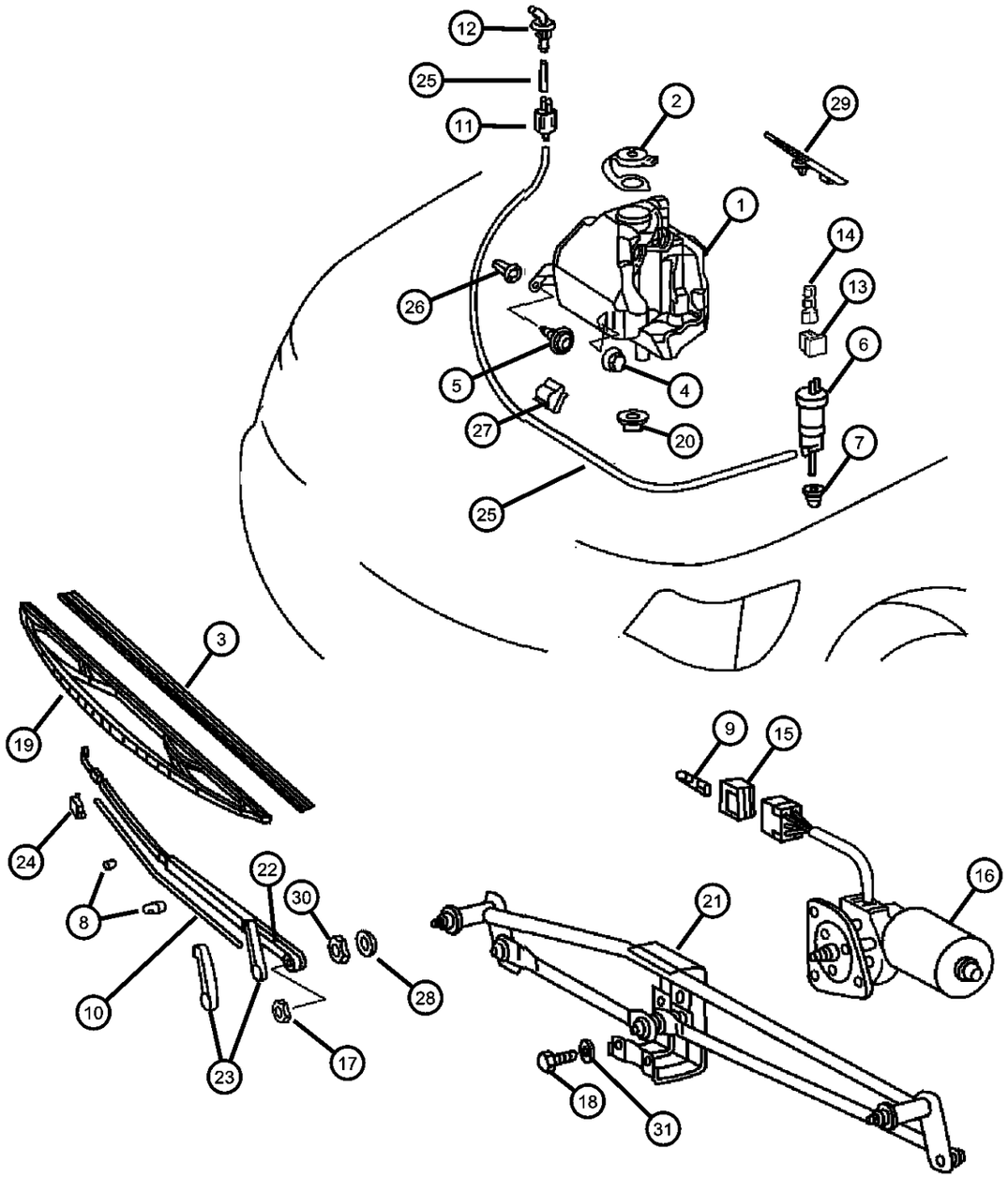

ITEM	PART NUMBER	QTY	LINE	SERIES	BODY	ENGINE	TRANS	TRIM	DESCRIPTION
	WBW00022AD								Mopar Alternative Winter Wiper Blades
	WB000022AE								Mopar V-Line Alternative Part
	WB-BLU022AA								Mopar Alternative Color Wiper Blade (Blue)
	WBRED022AA								Mopar Alternative Color Wiper Blade (Red)
	WBYEL022AA								Mopar Alternative Color Wiper Blade (Yellow)
	WB-WHI022AA								Mopar Alternative Color Wiper Blade (White)
	WB-CAR022AA								Mopar Alternative Color Wiper Blade (Carbon Fiber)
		1	2, 6		51, 52, 54, 55, 56				Passenger Side
	WBW00022AD								Mopar Alternative Winter Wiper Blades
	WB000022AE								Mopar V-Line Alternative Part
	WB-BLU022AA								Mopar Alternative Color Wiper Blade (Blue)
	WBRED022AA								Mopar Alternative Color Wiper Blade (Red)
	WBYEL022AA								Mopar Alternative Color Wiper Blade (Yellow)
	WB-WHI022AA								Mopar Alternative Color Wiper Blade (White)
	WB-CAR022AA								Mopar Alternative Color Wiper Blade (Carbon Fiber)
		1	3, 7		12, 15, 16				Passenger Side
	WBW00022AD								Mopar Alternative Winter Wiper Blades
	WB000022AE								Mopar V-Line Alternative Part
	WB-BLU022AA								Mopar Alternative Color Wiper Blade (Blue)
	WBRED022AA								Mopar Alternative Color Wiper Blade (Red)

SPRINTER (VA)

SERIES	LINE	BODY	ENGINE	TRANSMISSION
L = LOWLINE	3 = HD DODGE 2WD 6 = Lt. Duty DODGE 4WD 2 = Med. Duty DODGE 2WD 7 = Med. Duty DODGE 4WD	55 = Wagon 140" 54 = Wagon 118" 52 = Wagon 140" 51 = Wagon 118" 12 = Van 140" 11 = Van 118" 06 = Front Section 158" 14 = Van 118" 15 = Van 140" 16 = Van 158" 56 = Wagon 158" 01 = Chassis Forward Control 118" 02 = Chassis Forward Control 140"	EX8 = Engine-2.7L I5 Mercedes Turbo Diesel	DGJ = Transmission-5-Spd. Automatic,W5A580

AR = use ase required - = Non illustrrated part

Windshield Wiper & Washer
Figure 23D-205

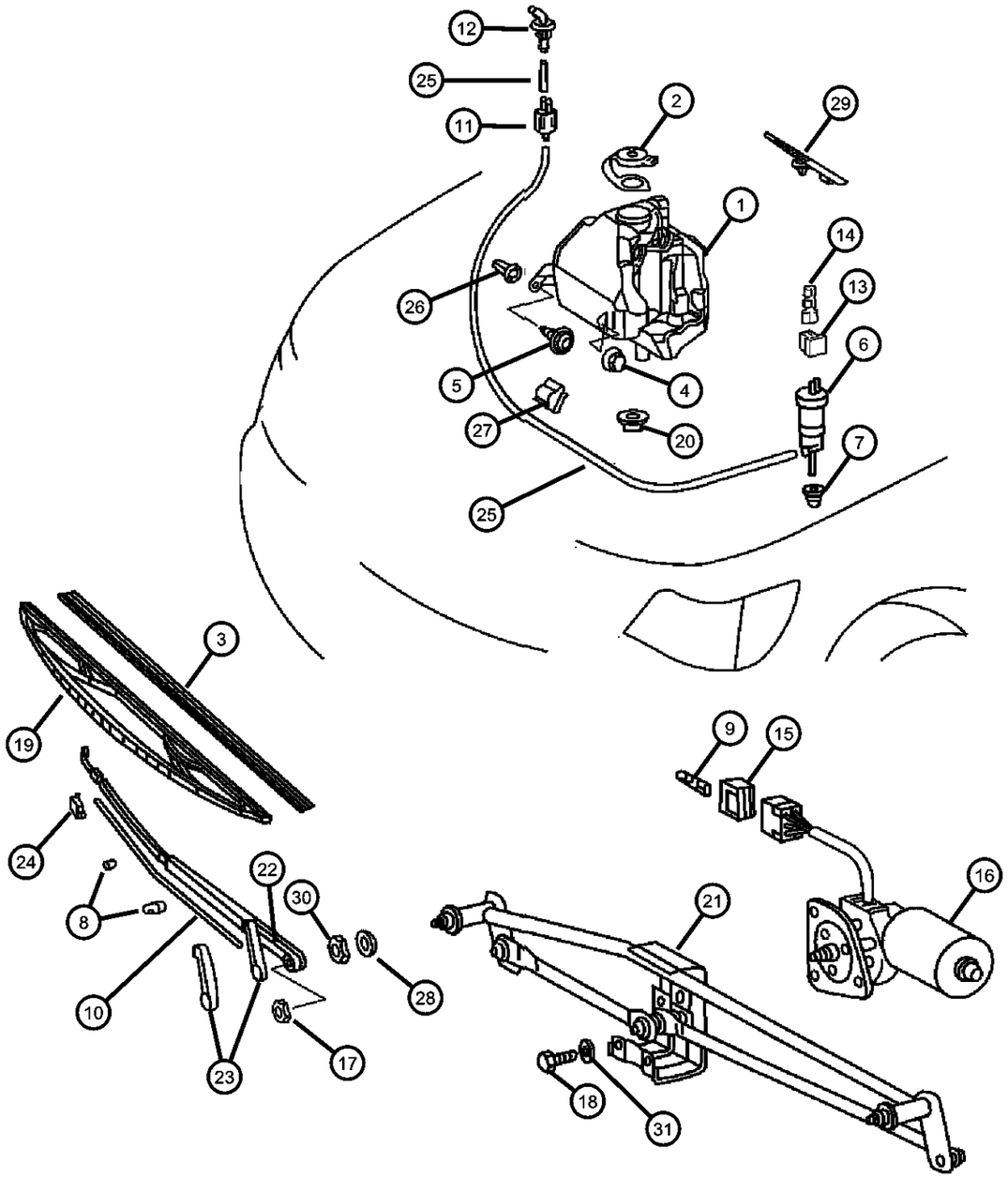

ITEM	PART NUMBER	QTY	LINE	SERIES	BODY	ENGINE	TRANS	TRIM	DESCRIPTION
	WBYEL022AA								Mopar Alternative Color Wiper Blade (Yellow)
	WB-WHI022AA								Mopar Alternative Color Wiper Blade (White)
	WB-CAR022AA								Mopar Alternative Color Wiper Blade (Carbon Fiber)
	05103544AA	1	2, 6		01, 02, 06				Driver Side
	WBW00027AD								Mopar Alternative Winter Wiper Blades
	WBW00024AD								Mopar Alternative Winter Wiper Blades
	WB000024AE								Mopar V-Line Alternative Part
	WB-BLU024AA								Mopar Alternative Color Wiper Blade (Blue)
	WBRED024AA								Mopar Alternative Color Wiper Blade (Red)
	WBYEL024AA								Mopar Alternative Color Wiper Blade (Yellow)
	WB-WHI024AA								Mopar Alternative Color Wiper Blade (White)
	WB-CAR024AA								Mopar Alternative Color Wiper Blade (Carbon Fiber)
		1	2, 6		11, 12, 14, 15, 16				Driver Side
	WBW00027AD								Mopar Alternative Winter Wiper Blades
	WBW00024AD								Mopar Alternative Winter Wiper Blades
	WB000024AE								Mopar V-Line Alternative Part
	WB-BLU024AA								Mopar Alternative Color Wiper Blade (Blue)
	WBRED024AA								Mopar Alternative Color Wiper Blade (Red)
	WBYEL024AA								Mopar Alternative Color Wiper Blade (Yellow)
	WB-WHI024AA								Mopar Alternative Color Wiper Blade (White)

SPRINTER (VA)

SERIES	LINE	BODY	ENGINE	TRANSMISSION
L = LOWLINE	3 = HD DODGE 2WD 6 = Lt. Duty DODGE 4WD 2 = Med. Duty DODGE 2WD 7 = Med. Duty DODGE 4WD	55 = Wagon 140" 54 = Wagon 118" 52 = Wagon 140" 51 = Wagon 118" 12 = Van 140" 11 = Van 118" 06 = Front Section 158" 14 = Van 118" 15 = Van 140" 16 = Van 158" 56 = Wagon 158" 01 = Chassis Forward Control 118" 02 = Chassis Forward Control 140"	EX8 = Engine-2.7L I5 Mercedes Turbo Diesel	DGJ = Transmission-5-Spd. Automatic,W5A580

Windshield Wiper & Washer
Figure 23D-205

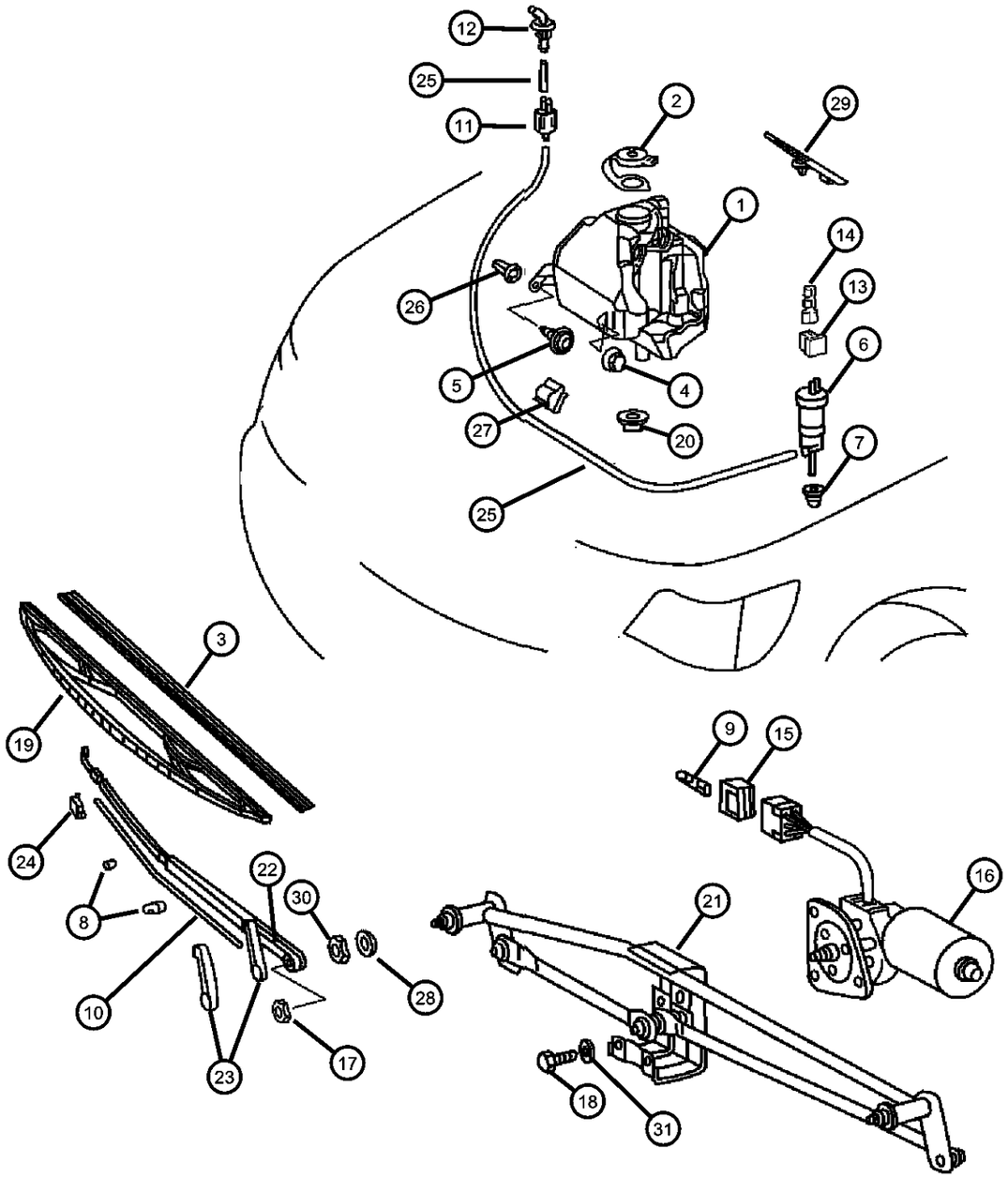

ITEM	PART NUMBER	QTY	LINE	SERIES	BODY	ENGINE	TRANS	TRIM	DESCRIPTION
	WB-CAR024AA	1	2, 6		51, 52, 54, 55, 56				Mopar Alternative Color Wiper Blade (Carbon Fiber) Driver Side
	WBW00027AD								Mopar Alternative Winter Wiper Blades
	WBW00024AD								Mopar Alternative Winter Wiper Blades
	WB000024AE								Mopar V-Line Alternative Part
	WB-BLU024AA								Mopar Alternative Color Wiper Blade (Blue)
	WBRED024AA								Mopar Alternative Color Wiper Blade (Red)
	WBYEL024AA								Mopar Alternative Color Wiper Blade (Yellow)
	WB-WHI024AA								Mopar Alternative Color Wiper Blade (White)
	WB-CAR024AA	1	3, 7		12, 15, 16				Mopar Alternative Color Wiper Blade (Carbon Fiber) Driver Side
	WBW00027AD								Mopar Alternative Winter Wiper Blades
	WBW00024AD								Mopar Alternative Winter Wiper Blades
	WB000024AE								Mopar V-Line Alternative Part
	WB-BLU024AA								Mopar Alternative Color Wiper Blade (Blue)
	WBRED024AA								Mopar Alternative Color Wiper Blade (Red)
	WBYEL024AA								Mopar Alternative Color Wiper Blade (Yellow)
	WB-WHI024AA								Mopar Alternative Color Wiper Blade (White)
	WB-CAR024AA								Mopar Alternative Color Wiper Blade (Carbon Fiber)
20									GROMMET, Washer Reservoir

SPRINTER (VA)

SERIES	LINE	BODY	ENGINE	TRANSMISSION
L = LOWLINE	3 = HD DODGE 2WD 6 = Lt. Duty DODGE 4WD 2 = Med. Duty DODGE 2WD 7 = Med. Duty DODGE 4WD	55 = Wagon 140" 54 = Wagon 118" 52 = Wagon 140" 51 = Wagon 118" 12 = Van 140" 11 = Van 118" 06 = Front Section 158" 14 = Van 118" 15 = Van 140" 16 = Van 158" 56 = Wagon 158" 01 = Chassis Forward Control 118" 02 = Chassis Forward Control 140"	EX8 = Engine-2.7L I5 Mercedes Turbo Diesel	DGJ = Transmission-5-Spd. Automatic,W5A580

AR = use ase required - = Non illustrrated part

Windshield Wiper & Washer
Figure 23D-205

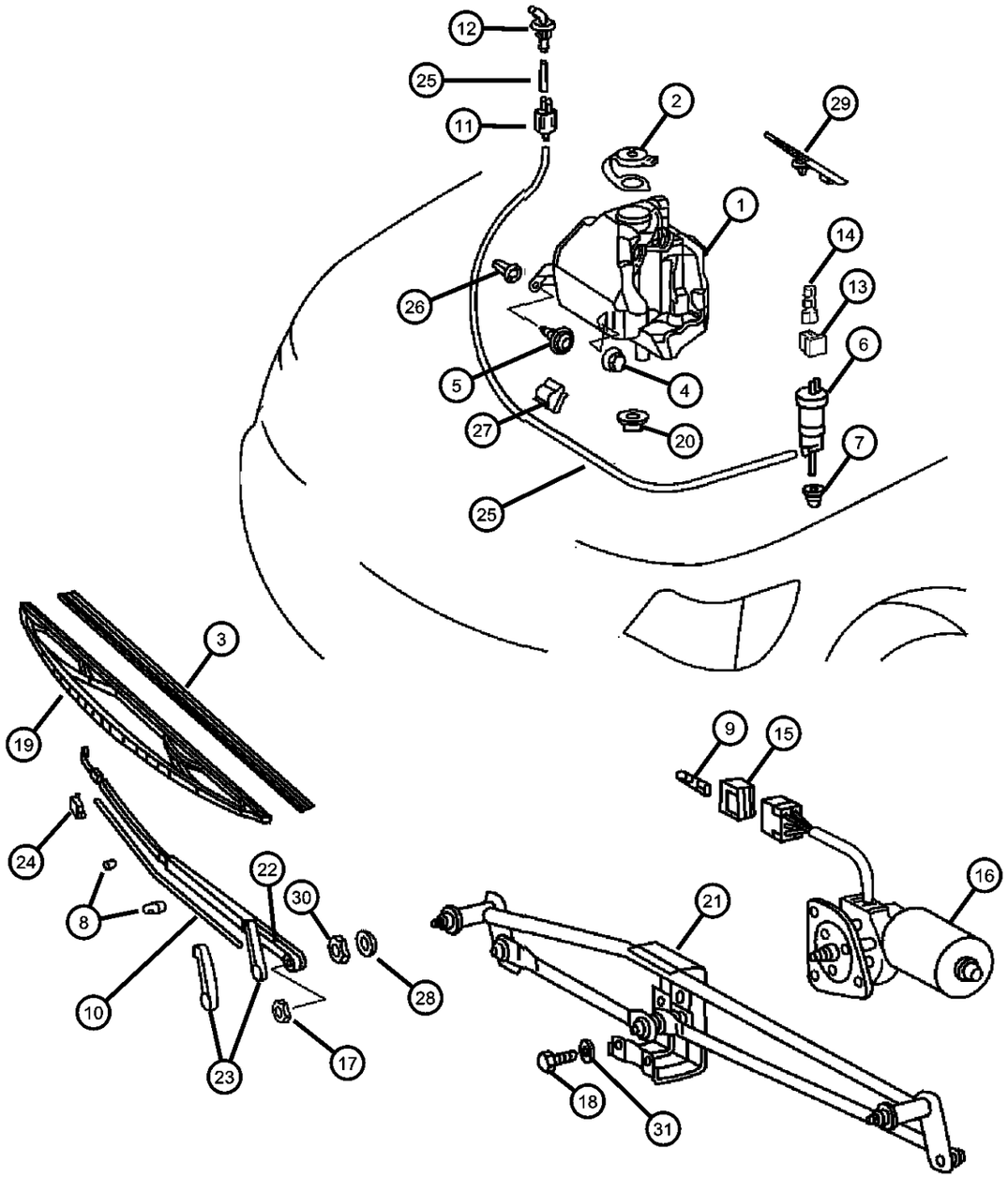

ITEM	PART NUMBER	QTY	LINE	SERIES	BODY	ENGINE	TRANS	TRIM	DESCRIPTION
	05125941AA	2	2, 6		11, 12, 14, 15, 16				
		2	2, 6		51, 52, 54, 55, 56				
		2	3, 7		12, 15, 16				
21	05133991AA	1							LINKAGE, Wiper Arm
22									ARM, Wiper
	05104458AA	1	2, 3, 6, 7						Left
	05104460AA	1	2, 3, 6, 7						Right
23	05103683AA	1	2, 3, 6, 7						COVER, Wiper Arm
24	05103698AA	1	2, 3, 6, 7						NOZZLE, Washer, Windshield
25									HOSE, Windshield Washer
	05125066AA	1	2, 6		11, 12, 14, 15, 16				
		1	2, 6		51, 52, 54, 55, 56				
		1	3, 7		12, 15, 16				
26		1							PLUG, Push Lock, (NOT SERVICED)
27									CLIP
	06507148AA	8	2, 6		11, 12, 14, 15, 16				
		8	2, 6		51, 52, 54, 55, 56				
		8	3, 7		12, 15, 16				
28	05125759AA	1	2, 3, 6, 7						WASHER
29									STRAP, Tie
	05133690AA	8	2, 6		11, 12, 14, 15, 16				
		8	2, 6		51, 52, 54, 55, 56				
		8	3, 7		12, 15, 16				
30	05125766AA	1	2, 3, 6, 7						NUT

SPRINTER (VA)

SERIES	LINE	BODY	ENGINE	TRANSMISSION
L = LOWLINE	3 = HD DODGE 2WD 6 = Lt. Duty DODGE 4WD 2 = Med. Duty DODGE 2WD 7 = Med. Duty DODGE 4WD	55 = Wagon 140" 54 = Wagon 118" 52 = Wagon 140" 51 = Wagon 118" 12 = Van 140" 11 = Van 118" 06 = Front Section 158" 14 = Van 118" 15 = Van 140" 16 = Van 158" 56 = Wagon 158" 01 = Chassis Forward Control 118" 02 = Chassis Forward Control 140"	EX8 = Engine-2.7L I5 Mercedes Turbo Diesel	DGJ = Transmission-5-Spd. Automatic,W5A580

AR = use ase required - = Non illustrrated part

Windshield Wiper & Washer
Figure 23D-205

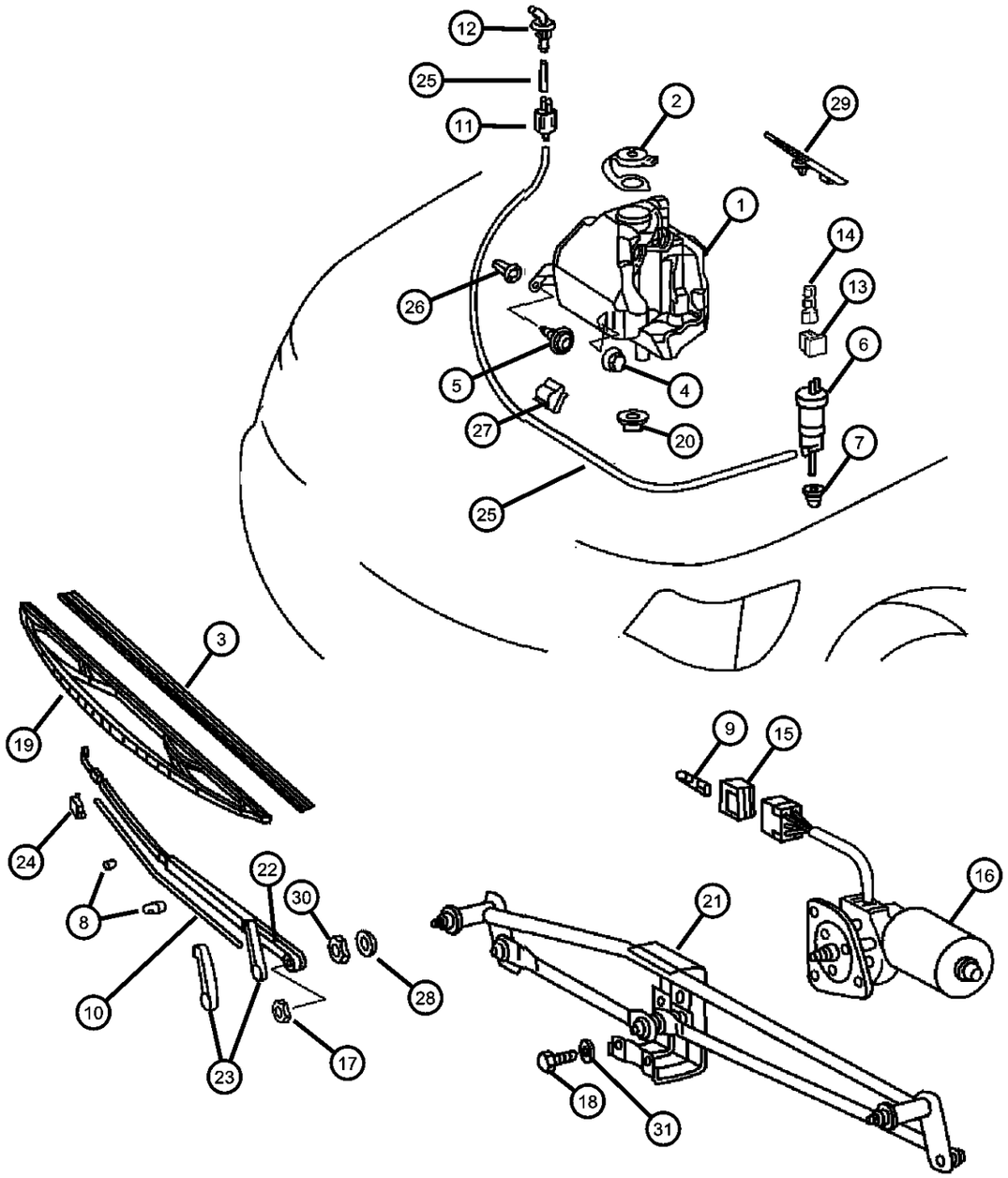

ITEM	PART NUMBER	QTY	LINE	SERIES	BODY	ENGINE	TRANS	TRIM	DESCRIPTION
31									WASHER
	05133908AA	1	2, 6		11, 12, 14, 15, 16				
		1	3, 7		12, 15, 16				
		1	2, 6		51, 52, 54, 55, 56				

SPRINTER (VA)

SERIES	LINE	BODY	ENGINE	TRANSMISSION
L = LOWLINE	3 = HD DODGE 2WD 6 = Lt. Duty DODGE 4WD 2 = Med. Duty DODGE 2WD 7 = Med. Duty DODGE 4WD	55 = Wagon 140" 54 = Wagon 118" 52 = Wagon 140" 51 = Wagon 118" 12 = Van 140" 11 = Van 118" 06 = Front Section 158" 14 = Van 118" 15 = Van 140" 16 = Van 158" 56 = Wagon 158" 01 = Chassis Forward Control 118" 02 = Chassis Forward Control 140"	EX8 = Engine-2.7L I5 Mercedes Turbo Diesel	DGJ = Transmission-5-Spd. Automatic,W5A580

AR = use ase required - = Non illustrrated part

Group - 24

Air Conditioning & Heater

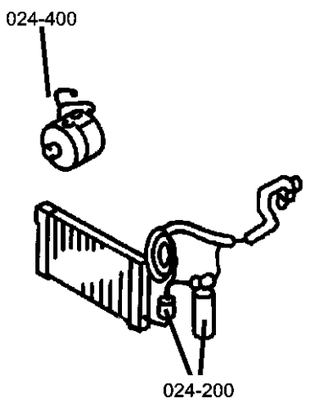

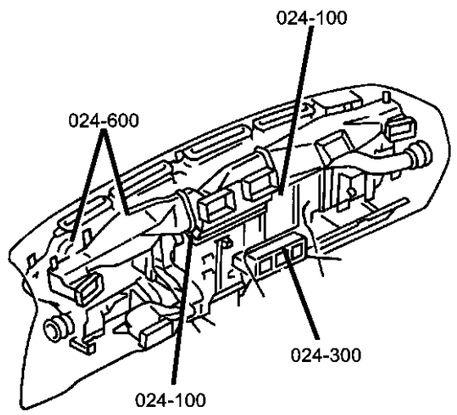

024-100 Air Conditioner and Heater Units 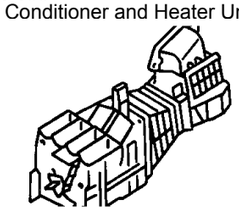	**024-200** Air Conditioner and Heater Plumbing 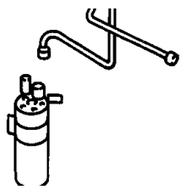	**024-300** Air Conditioner and Heater Controls 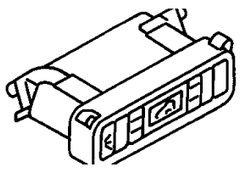	**024-400** Air Conditioning Compressor 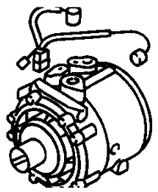
024-600 Air Ducts and Outlets 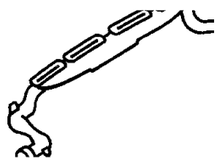			

Group - 24 Air Conditioning & Heater

Illustration Title — Group-Fig. No.

Air Conditioner and Heater Units
Hevac Unit, Front....Fig. 24 - 130

Air Conditioner and Heater Plumbing
Heat Exchanger and Plumbing....Fig. 24 - 250
Plumbing, Heater....Fig. 24 - 260
Plumbing, Heater with Auxiliary warm water Heater....Fig. 24 - 265
Plumbing, Air Conditioning....Fig. 24 - 270
Condenser, Fan Front....Fig. 24 - 280
Condenser, Fan Roof....Fig. 24 - 285
Auxiliary Warm Water Heater....Fig. 24 - 290

Air Conditioner and Heater Controls
Control....Fig. 24 - 320

Air Conditioning Compressor
Compressor and Mounting....Fig. 24 - 420

Air Ducts and Outlets
Air Ducts And Outlets, Front....Fig. 24 - 630
Air Ducts And Outlets, Rear....Fig. 24 - 640
Ventilator, Roof Mounted....Fig. 24 - 650

Hevac Unit, Front
Figure 24-130

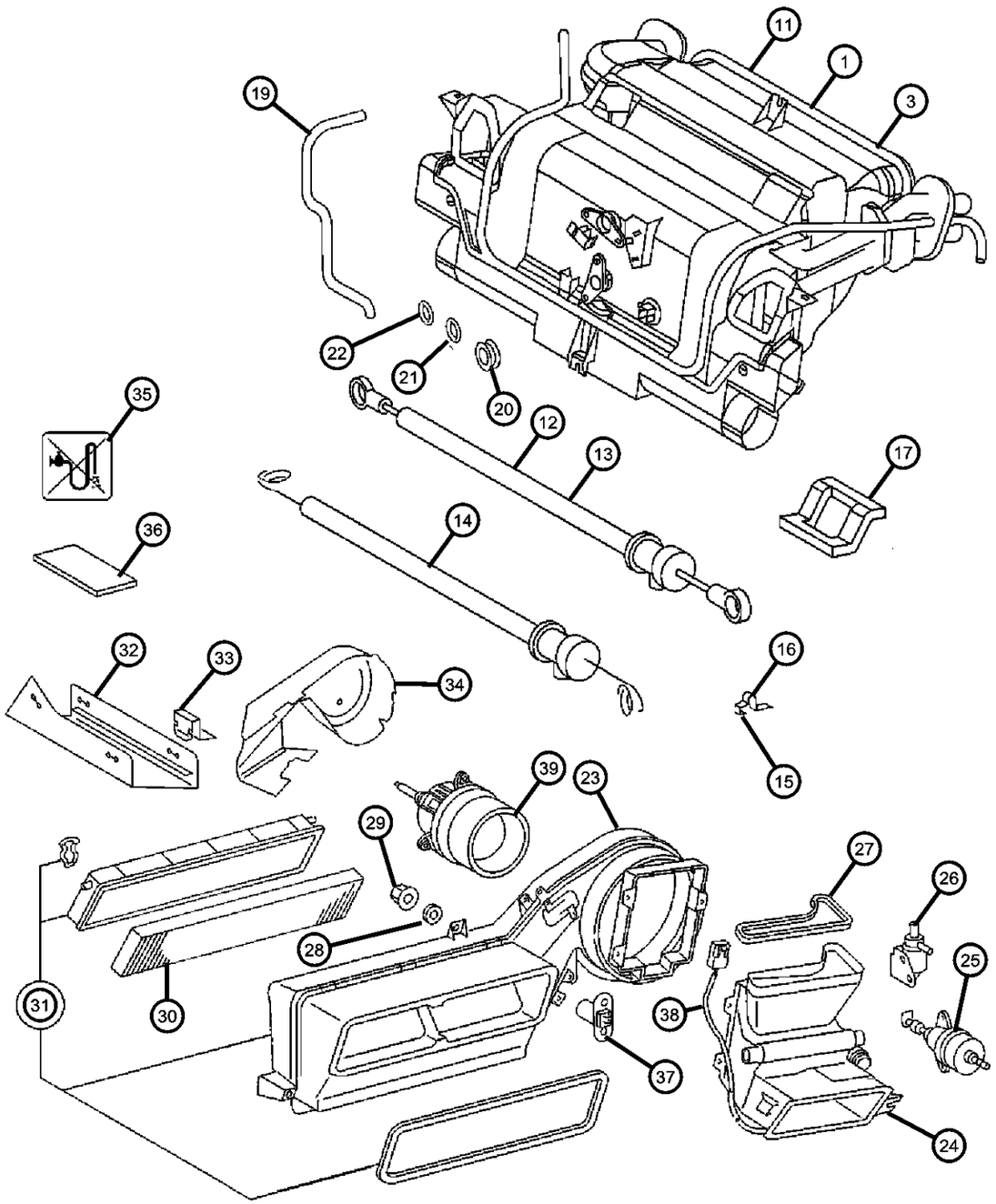

ITEM	PART NUMBER	QTY	LINE	SERIES	BODY	ENGINE	TRANS	TRIM	DESCRIPTION
1									HEATER
	05133422AA	1	2, 6		01, 02, 06				
		1	2, 6		11, 12, 14, 15, 16				Heater
		1	2, 6		51, 52, 54, 55, 56				Heater
		1	3, 7		02, 06				
		1	3, 7		12, 15, 16				Heater
-2									SCREW, Attaching
	06104610AA	4	2, 6		51, 52, 54, 55, 56				
		4	2, 6		11, 12, 14, 15, 16				
		4	3, 7		12, 15, 16				
3									HEATER AND A/C UNIT, Includes items 3 - 9
	05134379AA	1	2, 6		01, 02, 06				
		1	2, 6		11, 12, 14, 15, 16				
		1	2, 6		51, 52, 54, 55, 56				
		1	3, 7		12, 15, 16				
-4									OUTLET, Air Conditioning & Heater
	05133424AA	1	3, 7		02, 06				
		1	3, 7		12, 15, 16				
		1	2, 6		01, 02, 06				
		1	2, 6		11, 12, 14, 15, 16				
		1	2, 6		51, 52, 54, 55, 56				
-5									GASKET
	05103773AA	1	2, 6		01, 02, 06				
		1	2, 6		11, 12, 14, 15, 16				

SPRINTER (VA)

SERIES	LINE	BODY	ENGINE	TRANSMISSION
L = LOWLINE	3 = HD DODGE 2WD 6 = Lt. Duty DODGE 4WD 2 = Med. Duty DODGE 2WD 7 = Med. Duty DODGE 4WD	55 = Wagon 140" 54 = Wagon 118" 52 = Wagon 140" 51 = Wagon 118" 12 = Van 140" 11 = Van 118" 06 = Front Section 158" 14 = Van 118" 15 = Van 140" 16 = Van 158" 56 = Wagon 158" 01 = Chassis Forward Control 118" 02 = Chassis Forward Control 140"	EX8 = Engine-2.7L I5 Mercedes Turbo Diesel	DGJ = Transmission-5-Spd. Automatic,W5A580

Hevac Unit, Front
Figure 24-130

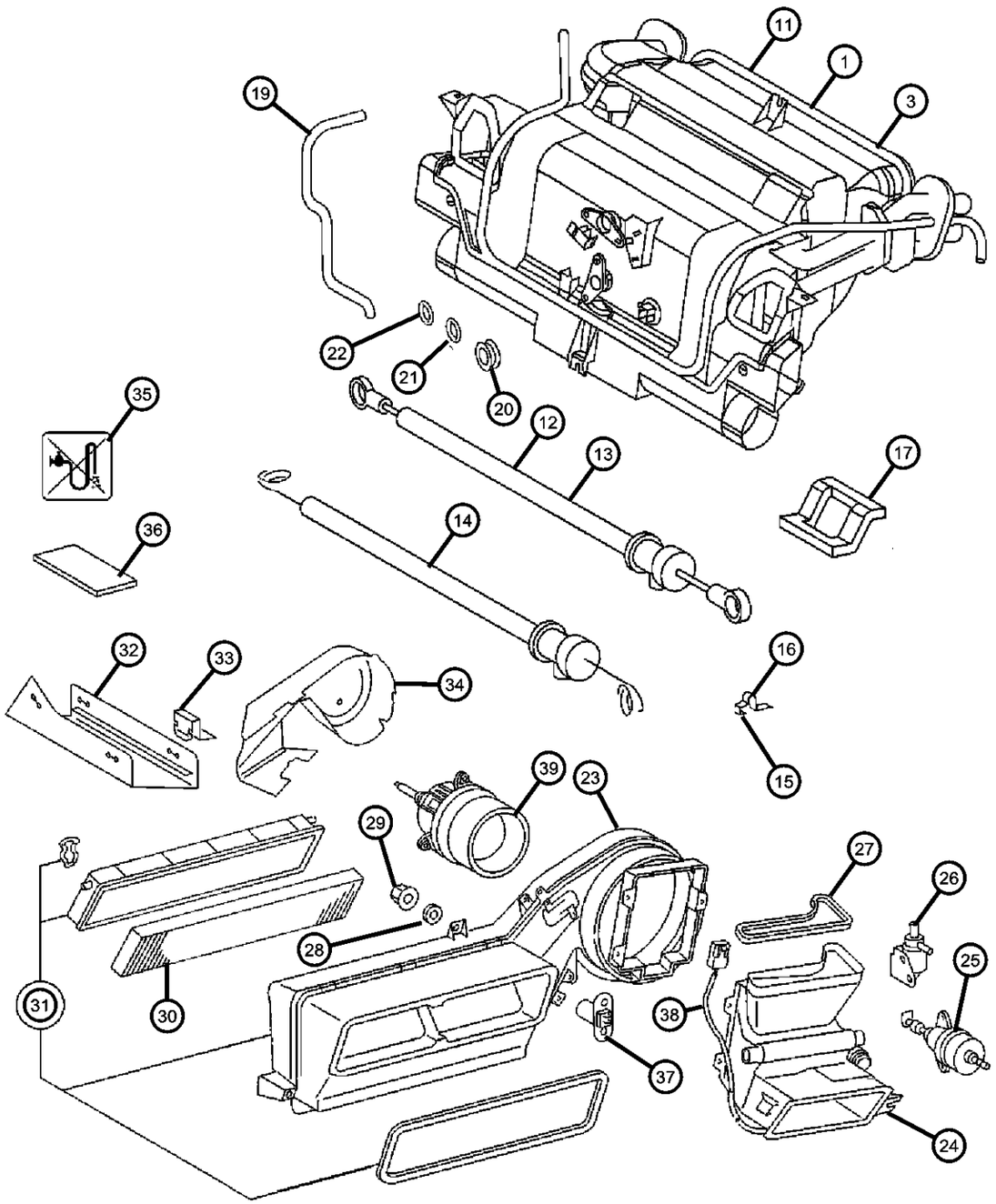

ITEM	PART NUMBER	QTY	LINE	SERIES	BODY	ENGINE	TRANS	TRIM	DESCRIPTION
		1	2, 6		51, 52, 54, 55, 56				
		1	3, 7		02, 06				
		1	3, 7		12, 15, 16				
-6									VALVE
	05103809AA	1	2, 6		01, 02, 06				
		1	2, 6		11, 12, 14, 15, 16				
		1	2, 6		51, 52, 54, 55, 56				
		1	3, 7		02, 06				
		1	3, 7		12, 15, 16				
-7									TUBE
	05133425AA	1	2, 6		01, 02, 06				
		1	2, 6		11, 12, 14, 15, 16				
		1	2, 6		51, 52, 54, 55, 56				
		1	3, 7		02, 06				
		1	3, 7		12, 15, 16				
-8									HEATER, Exchanger
	05133426AA	1	2, 6		01, 02, 06				
		1	2, 6		11, 12, 14, 15, 16				
		1	2, 6		51, 52, 54, 55, 56				
		1	3, 7		02, 06				
		1	3, 7		12, 15, 16				
-9									EVAPORATOR, Air Conditioning
	05103694AA	1	2, 6		01, 02, 06				
		1	2, 6		11, 12, 14, 15, 16				

SPRINTER (VA)

SERIES	LINE	BODY	ENGINE	TRANSMISSION
L = LOWLINE	3 = HD DODGE 2WD 6 = Lt. Duty DODGE 4WD 2 = Med. Duty DODGE 2WD 7 = Med. Duty DODGE 4WD	55 = Wagon 140" 54 = Wagon 118" 52 = Wagon 140" 51 = Wagon 118" 12 = Van 140" 11 = Van 118" 06 = Front Section 158" 14 = Van 118" 15 = Van 140" 16 = Van 158" 56 = Wagon 158" 01 = Chassis Forward Control 118" 02 = Chassis Forward Control 140"	EX8 = Engine-2.7L I5 Mercedes Turbo Diesel	DGJ = Transmission-5-Spd. Automatic,W5A580

Hevac Unit, Front
Figure 24-130

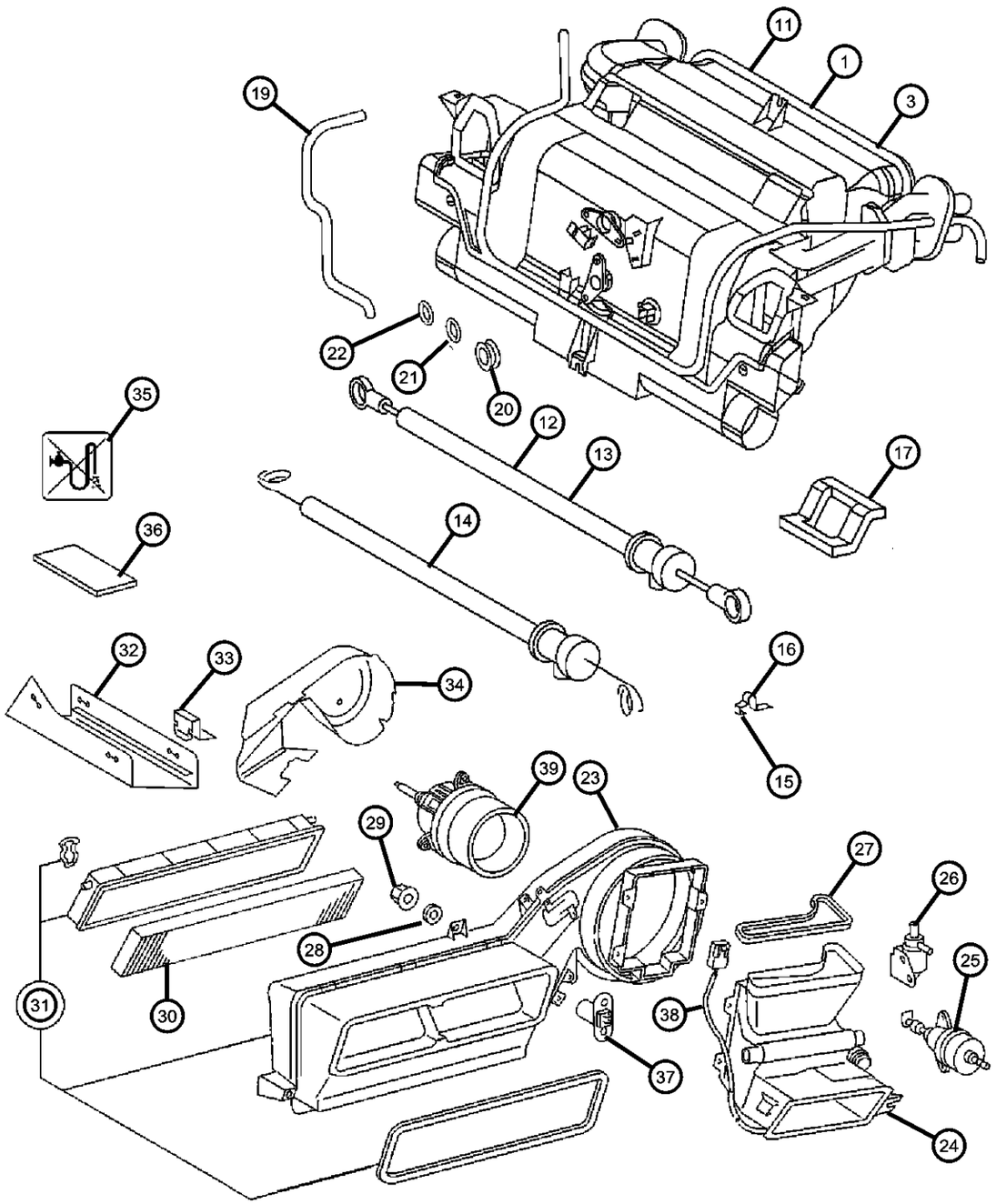

ITEM	PART NUMBER	QTY	LINE	SERIES	BODY	ENGINE	TRANS	TRIM	DESCRIPTION
		1	2, 6		51, 52, 54, 55, 56				
		1	3, 7		02, 06				
		1	3, 7		12, 15, 16				
-10									SENSOR, Temperature
	05103937AA	1	2, 6		01, 02, 06				Flat Plug Version
	05133427AA	1	2, 6		01, 02, 06				
		1	2, 6		12, 14, 15, 16, 11				
		1	2, 6		51, 52, 54, 55, 56				
		1	3, 7		02, 06				
		1	3, 7		12, 15, 16				
		1	2, 6		51, 52, 54, 55, 56				Flat Plug Version
		1	3, 7		02, 06				Flat Plug Version
		1	3, 7		12, 15, 16				Flat Plug Version
	05103937AB	1	2, 6		11, 12, 14, 15, 16				Flat Plug Version
11									CONTROL, Electronic
	05104477AA	1	2, 6		01, 02, 06				
		1	2, 6		11, 12, 14, 15, 16				
		1	2, 6		51, 52, 54, 55, 56				
		1	3, 7		02, 06				
		1	3, 7		12, 15, 16				
12									CABLE, A/C And Heater Control
	05104492AA	1	2, 6		01, 02, 06				
		1	2, 6		11, 12, 14, 15, 16				
		1	2, 6		51, 52, 54, 55, 56				

SPRINTER (VA)

SERIES	LINE	BODY	ENGINE	TRANSMISSION
L = LOWLINE	3 = HD DODGE 2WD 6 = Lt. Duty DODGE 4WD 2 = Med. Duty DODGE 2WD 7 = Med. Duty DODGE 4WD	55 = Wagon 140" 54 = Wagon 118" 52 = Wagon 140" 51 = Wagon 118" 12 = Van 140" 11 = Van 118" 06 = Front Section 158" 14 = Van 118" 15 = Van 140" 16 = Van 158" 56 = Wagon 158" 01 = Chassis Forward Control 118" 02 = Chassis Forward Control 140"	EX8 = Engine-2.7L I5 Mercedes Turbo Diesel	DGJ = Transmission-5-Spd. Automatic,W5A580

Hevac Unit, Front
Figure 24-130

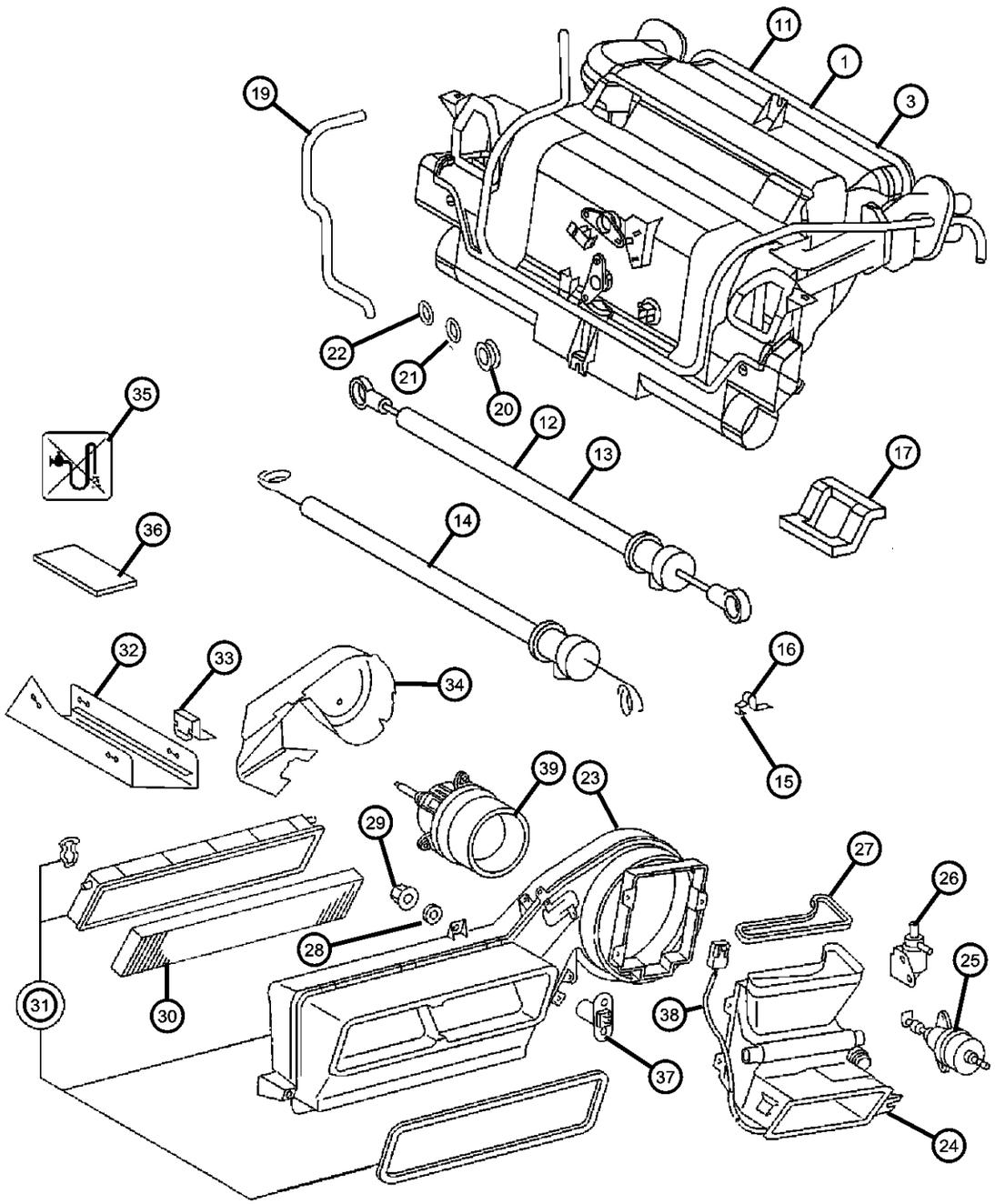

ITEM	PART NUMBER	QTY	LINE	SERIES	BODY	ENGINE	TRANS	TRIM	DESCRIPTION
		1	3, 7		02, 06				
		1	3, 7		12, 15, 16				
13									CABLE, A/C And Heater Control, Defrost
	05104493AA	1	2, 6		51, 52, 54, 55, 56				
		1	3, 7		02, 06				
		1	3, 7		12, 15, 16				
		1	2, 6		01, 02, 06				
		1	2, 6		11, 12, 14, 15, 16				
14									CABLE, A/C And Heater Control, Water Valve
	05104494AA	1	2, 6		01, 02, 06				
		1	2, 6		11, 12, 14, 15, 16				
		1	2, 6		51, 52, 54, 55, 56				
		1	3, 7		02, 06				
		1	3, 7		12, 15, 16				
15									CLIP
	05125562AA	1	2, 6		01, 02, 06				
		1	2, 6		11, 12, 14, 15, 16				
		1	2, 6		51, 52, 54, 55, 56				
		1	3, 7		02, 06				
		1	3, 7		12, 15, 16				
16									CLIP, Cable
	05103693AA	1	3, 7		12, 15, 16				
		1	2, 6		01, 02, 06				
		1	2, 6		11, 12, 14, 15, 16				

SPRINTER (VA)

SERIES	LINE	BODY	ENGINE	TRANSMISSION
L = LOWLINE	3 = HD DODGE 2WD 6 = Lt. Duty DODGE 4WD 2 = Med. Duty DODGE 2WD 7 = Med. Duty DODGE 4WD	55 = Wagon 140" 54 = Wagon 118" 52 = Wagon 140" 51 = Wagon 118" 12 = Van 140" 11 = Van 118" 06 = Front Section 158" 14 = Van 118" 15 = Van 140" 16 = Van 158" 56 = Wagon 158" 01 = Chassis Forward Control 118" 02 = Chassis Forward Control 140"	EX8 = Engine-2.7L I5 Mercedes Turbo Diesel	DGJ = Transmission-5-Spd. Automatic,W5A580

Hevac Unit, Front
Figure 24-130

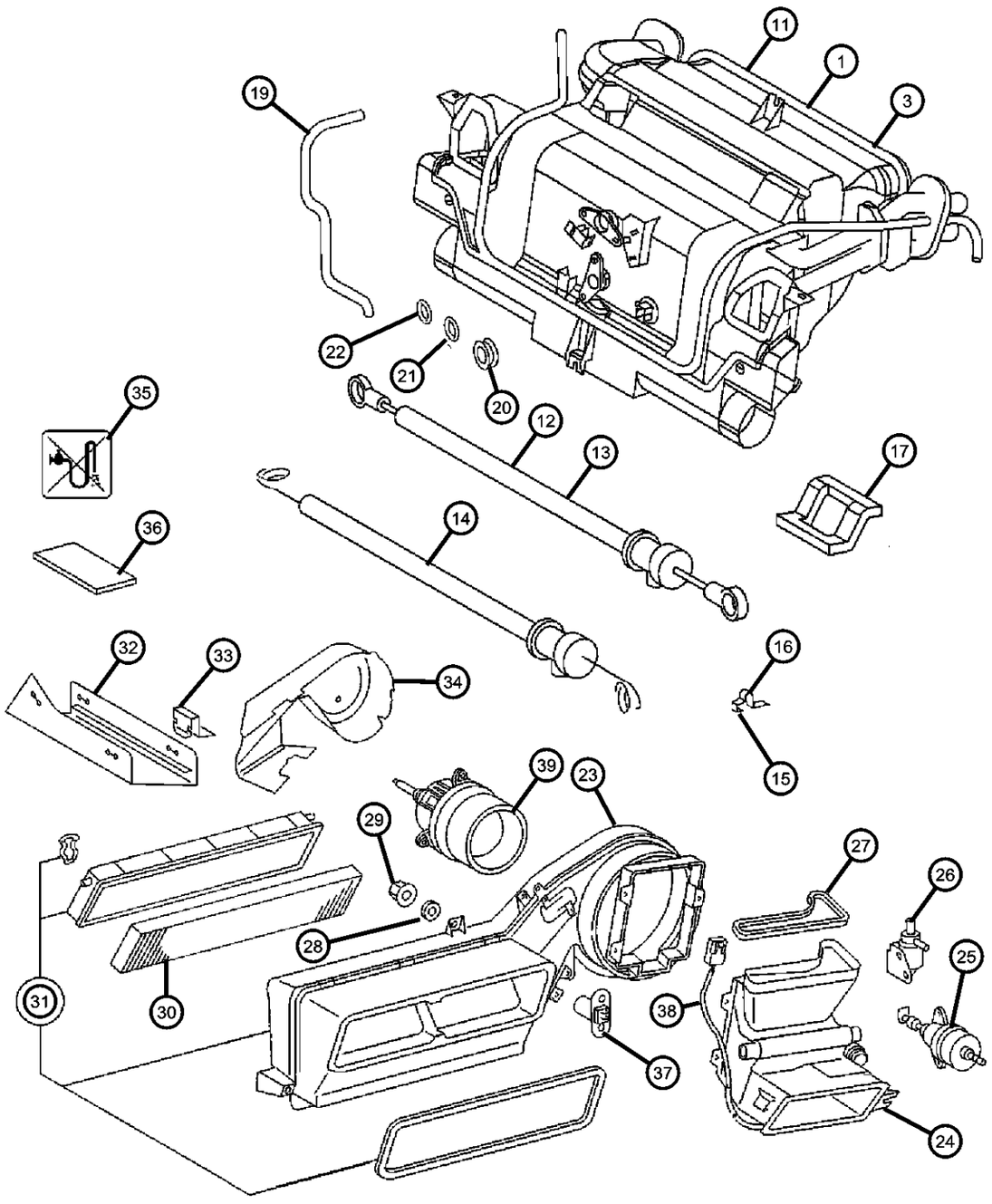

ITEM	PART NUMBER	QTY	LINE	SERIES	BODY	ENGINE	TRANS	TRIM	DESCRIPTION
		1	2, 6		51, 52, 54, 55, 56				
		1	3, 7		02, 06				
17									SEAL
	05124786AA	2	2, 6		02, 06, 01				
		2	2, 6		11, 12, 14, 15, 16				
		2	2, 6		51, 52, 54, 55, 56				
		2	3, 7		02, 06				
		2	3, 7		12, 15, 16				
-18									CLIP, Hose
	05119332AA	1	3, 7		02, 06				
		1	2, 6		01, 02, 06				
		1	2, 6		11, 12, 14, 15, 16				
		1	2, 6		51, 52, 54, 55, 56				
		1	3, 7		12, 15, 16				
19									HOSE
	05124827AA	1	2, 6		01, 02, 06				
		1	2, 6		16, 11, 12, 14, 15				
		1	2, 6		51, 52, 54, 55, 56				
		1	3, 7		02, 06				
		1	3, 7		12, 15, 16				
20									GROMMET
	05096558AA	2	2, 6		01, 02, 06				
		2	3, 7		02, 06				
	05125938AA	1	2, 6		11, 12, 14, 15, 16				

SPRINTER (VA)

SERIES	LINE	BODY	ENGINE	TRANSMISSION
L = LOWLINE	3 = HD DODGE 2WD 6 = Lt. Duty DODGE 4WD 2 = Med. Duty DODGE 2WD 7 = Med. Duty DODGE 4WD	55 = Wagon 140" 54 = Wagon 118" 52 = Wagon 140" 51 = Wagon 118" 12 = Van 140" 11 = Van 118" 06 = Front Section 158" 14 = Van 118" 15 = Van 140" 16 = Van 158" 56 = Wagon 158" 01 = Chassis Forward Control 118" 02 = Chassis Forward Control 140"	EX8 = Engine-2.7L I5 Mercedes Turbo Diesel	DGJ = Transmission-5-Spd. Automatic,W5A580

Hevac Unit, Front
Figure 24-130

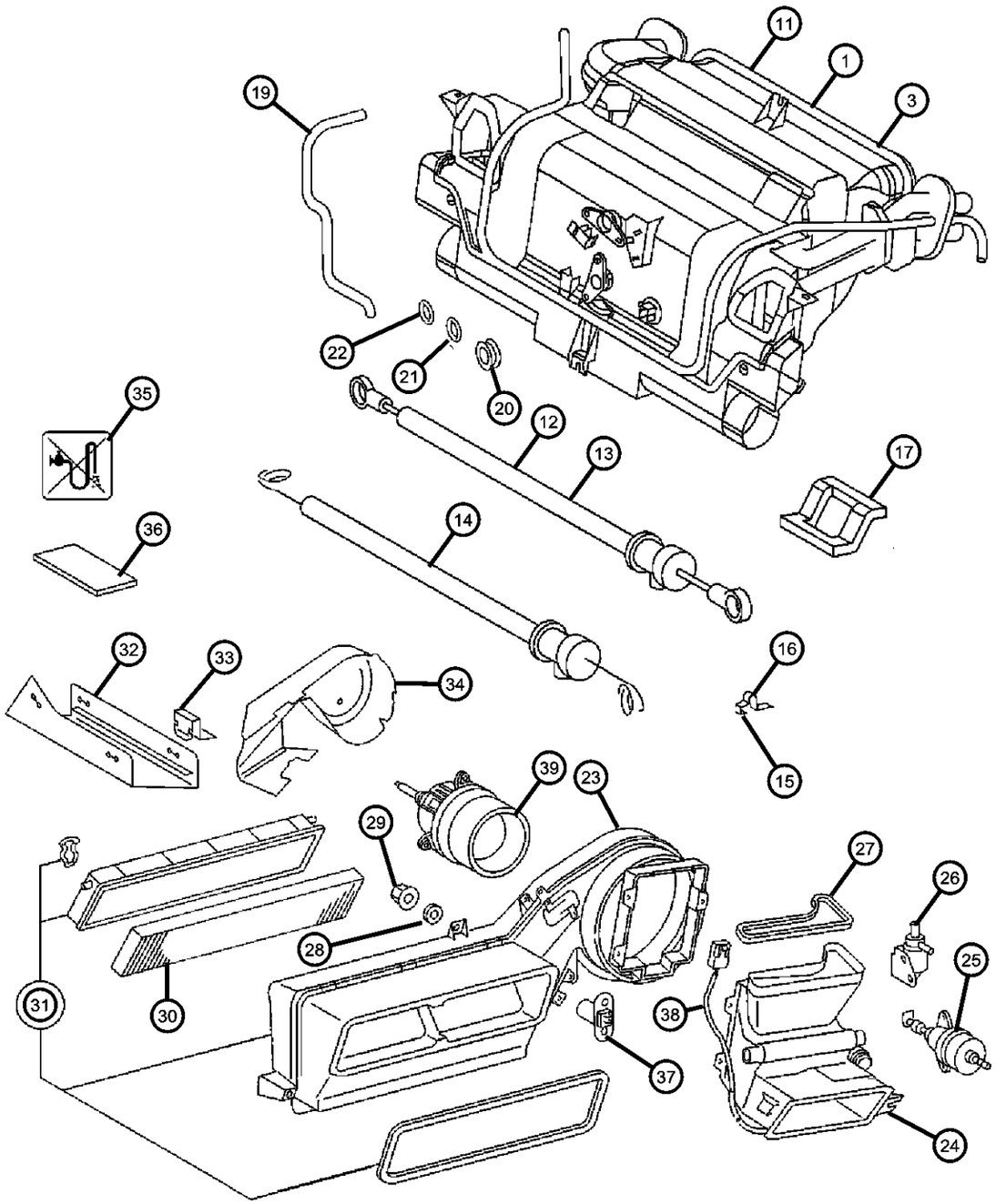

ITEM	PART NUMBER	QTY	LINE	SERIES	BODY	ENGINE	TRANS	TRIM	DESCRIPTION
		1	2, 6		51, 52, 54, 55, 56				
		1	3, 7		12, 15, 16				
21									O RING, A/C Line
	05098971AA	1	2, 6		01, 02, 06				
		1	2, 6		11, 12, 14, 15, 16				
		1	2, 6		51, 52, 54, 55, 56				
		1	3, 7		02, 06				
		1	3, 7		12, 15, 16				
22									O RING, A/C Line
	05098972AA	1	2, 6		52, 54, 55, 56, 51				
		1	3, 7		02, 06				
		1	3, 7		12, 15, 16				
		1	2, 6		01, 02, 06				
		1	2, 6		11, 12, 14, 15, 16				
23									HOUSING, Heater
	05124712AA	1	2, 6		51, 52, 54, 55, 56				[-HAB]
		1	3, 7		02, 06				[-HAB]
		1	3, 7		12, 15, 16				[-HAB]
	05124713AA	1	2, 6		01, 02, 06				[HAB]
		1	2, 6		11, 12, 14, 15, 16				[HAB]
		1	2, 6		51, 52, 54, 55, 56				[HAB]
		1	3, 7		02, 06				[HAB]
		1	3, 7		15, 16, 12				[HAB]
		1	2, 6		01, 02, 06				[-HAB]

SPRINTER (VA)

SERIES	LINE	BODY	ENGINE	TRANSMISSION
L = LOWLINE	3 = HD DODGE 2WD 6 = Lt. Duty DODGE 4WD 2 = Med. Duty DODGE 2WD 7 = Med. Duty DODGE 4WD	55 = Wagon 140" 54 = Wagon 118" 52 = Wagon 140" 51 = Wagon 118" 12 = Van 140" 11 = Van 118" 06 = Front Section 158" 14 = Van 118" 15 = Van 140" 16 = Van 158" 56 = Wagon 158" 01 = Chassis Forward Control 118" 02 = Chassis Forward Control 140"	EX8 = Engine-2.7L I5 Mercedes Turbo Diesel	DGJ = Transmission-5-Spd. Automatic,W5A580

Hevac Unit, Front
Figure 24-130

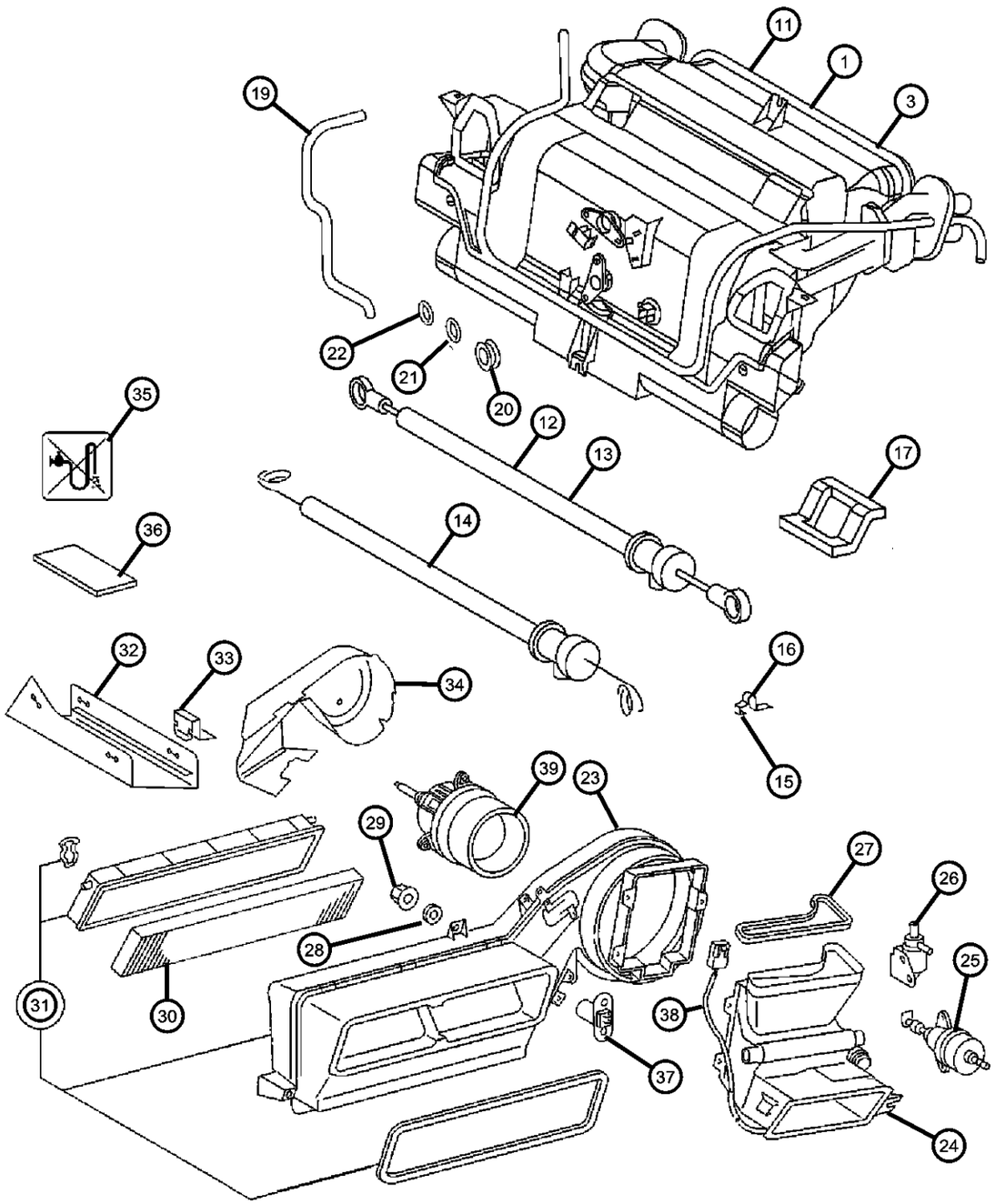

ITEM	PART NUMBER	QTY	LINE	SERIES	BODY	ENGINE	TRANS	TRIM	DESCRIPTION
		1	2, 6		11, 12, 14, 15, 16				[-HAB]
24									DUCT, Air Outlet
	05133430AA	1	2, 6		01, 02, 06				
		1	2, 6		11, 12, 14, 15, 16				
		1	2, 6		51, 52, 54, 55, 56				
		1	3, 7		02, 06				
		1	3, 7		12, 15, 16				
25									ACTUATOR, A/C and Heater
	05133441AA	1	2, 6		11, 12, 14, 15, 16				
		1	2, 6		51, 52, 54, 55, 56				
		1	3, 7		02, 06				
		1	3, 7		12, 15, 16				
		1	2, 6		01, 02, 06				
26									VALVE
	05133433AA	1	2, 6		01, 02, 06				
		1	2, 6		11, 12, 14, 15, 16				
		1	2, 6		51, 52, 54, 55, 56				
		1	3, 7		02, 06				
		1	3, 7		12, 15, 16				
27									SEAL
	05124770AA	1	2, 6		01, 02, 06				
		1	2, 6		11, 12, 14, 15, 16				
		1	2, 6		51, 52, 54, 55, 56				
		1	3, 7		02, 06				

SPRINTER (VA)

SERIES	LINE	BODY	ENGINE	TRANSMISSION
L = LOWLINE	3 = HD DODGE 2WD 6 = Lt. Duty DODGE 4WD 2 = Med. Duty DODGE 2WD 7 = Med. Duty DODGE 4WD	55 = Wagon 140" 54 = Wagon 118" 52 = Wagon 140" 51 = Wagon 118" 12 = Van 140" 11 = Van 118" 06 = Front Section 158" 14 = Van 118" 15 = Van 140" 16 = Van 158" 56 = Wagon 158" 01 = Chassis Forward Control 118" 02 = Chassis Forward Control 140"	EX8 = Engine-2.7L I5 Mercedes Turbo Diesel	DGJ = Transmission-5-Spd. Automatic,W5A580

Hevac Unit, Front
Figure 24-130

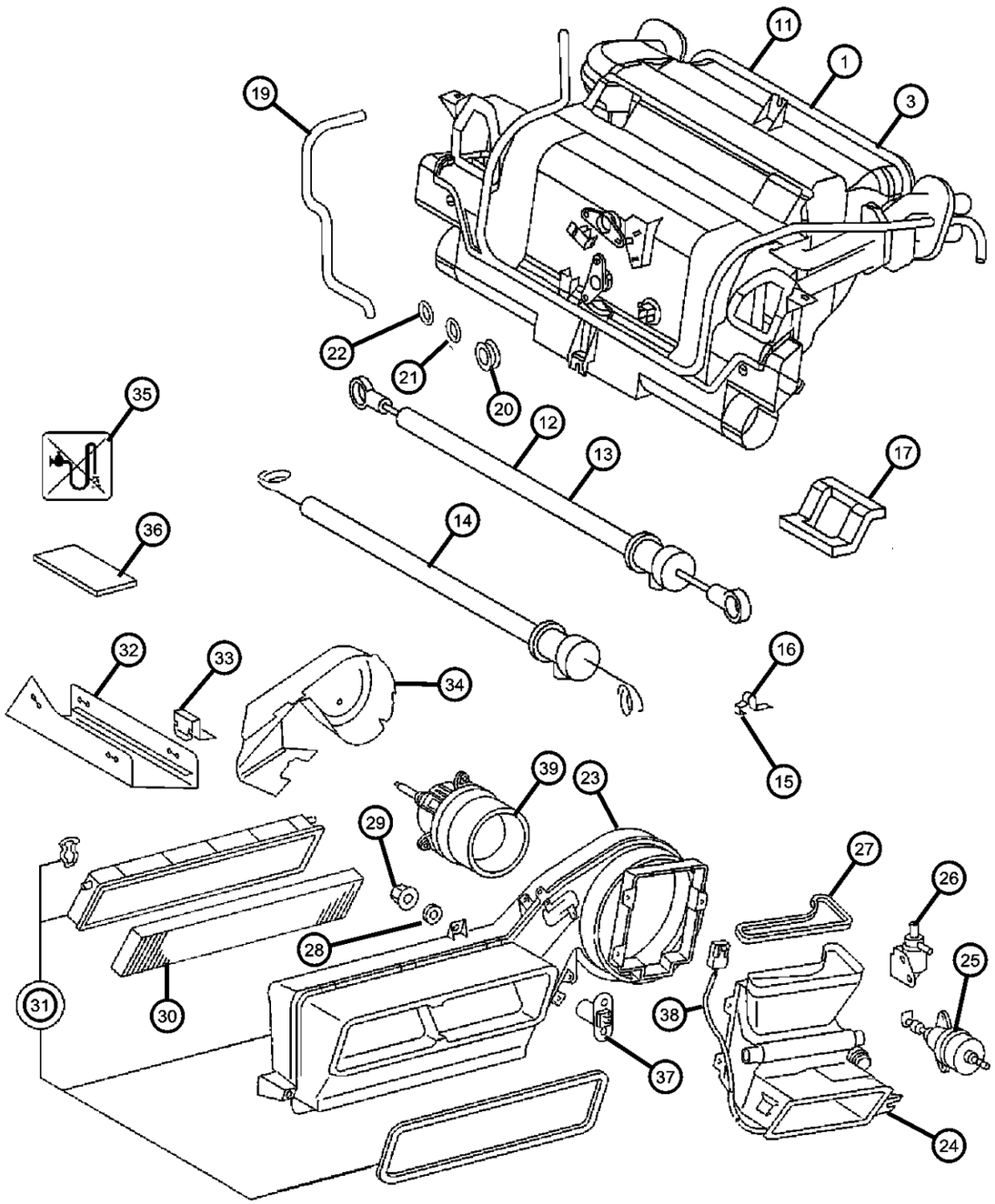

ITEM	PART NUMBER	QTY	LINE	SERIES	BODY	ENGINE	TRANS	TRIM	DESCRIPTION
		1	3, 7		12, 15, 16				
28									WASHER
	05133908AA	1	2, 6		11, 12, 14, 15, 16				
		1	2, 6		51, 52, 54, 55, 56				
		1	3, 7		12, 15, 16				
29									NUT
	05125765AA	5	2, 6		01, 02, 06				
		5	2, 6		11, 12, 14, 15, 16				
		5	2, 6		51, 52, 54, 55, 56				
		5	3, 7		02, 06				
		5	3, 7		12, 15, 16				
30									FILTER, A/C and Heater Unit
	05103600AA	1	2, 6		01, 02, 06				
		1	2, 6		16, 11, 12, 14, 15				
		1	2, 6		51, 52, 54, 55, 56				
		1	3, 7		02, 06				
		1	3, 7		12, 15, 16				
31									COVER, A/C and Heater
	05133439AA	1	2, 6		01, 02, 06				
		1	2, 6		11, 12, 14, 15, 16				
		1	2, 6		51, 52, 54, 55, 56				
		1	3, 7		02, 06				
		1	3, 7		12, 15, 16				
32									ISOLATOR

SPRINTER (VA)

SERIES	LINE	BODY	ENGINE	TRANSMISSION
L = LOWLINE	3 = HD DODGE 2WD 6 = Lt. Duty DODGE 4WD 2 = Med. Duty DODGE 2WD 7 = Med. Duty DODGE 4WD	55 = Wagon 140" 54 = Wagon 118" 52 = Wagon 140" 51 = Wagon 118" 12 = Van 140" 11 = Van 118" 06 = Front Section 158" 14 = Van 118" 15 = Van 140" 16 = Van 158" 56 = Wagon 158" 01 = Chassis Forward Control 118" 02 = Chassis Forward Control 140"	EX8 = Engine-2.7L I5 Mercedes Turbo Diesel	DGJ = Transmission-5-Spd. Automatic,W5A580

AR = use ase required - = Non illustrrated part

Hevac Unit, Front
Figure 24-130

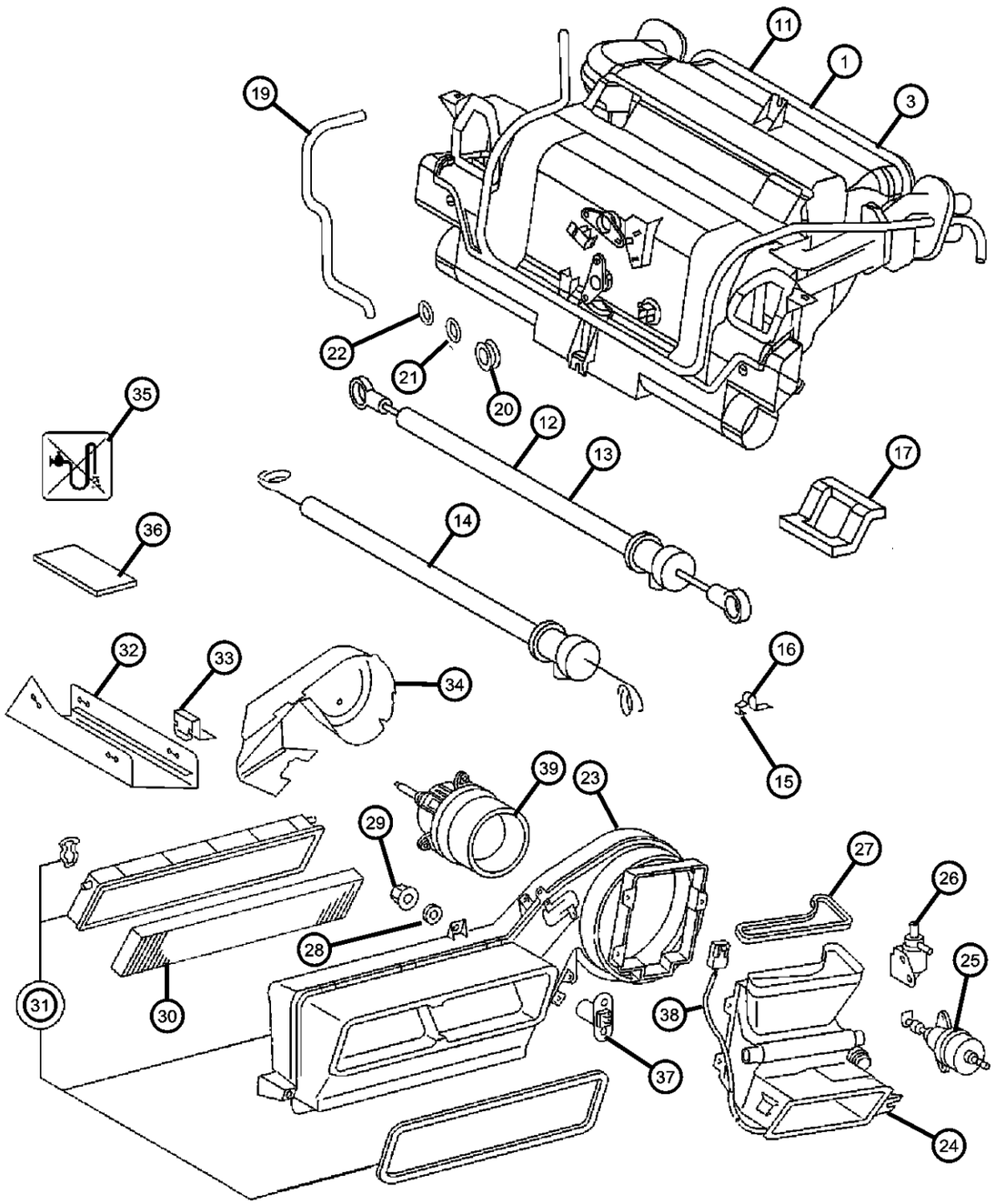

ITEM	PART NUMBER	QTY	LINE	SERIES	BODY	ENGINE	TRANS	TRIM	DESCRIPTION
	05124759AA	1	2, 6		01, 02, 06				
		1	2, 6		11, 12, 14, 15, 16				
		1	2, 6		51, 52, 54, 55, 56				
		1	3, 7		02, 06				
		1	3, 7		12, 15, 16				
33									CLIP
	05125571AA	5	3, 7		12, 15, 16				
		5	2, 6		01, 02, 06				
		5	2, 6		11, 12, 14, 15, 16				
		5	2, 6		52, 54, 55, 56, 51				
		5	3, 7		02, 06				
34									INSULATION, Blower Motor
	05124760AA	1	2, 6		01, 02, 06				
		1	2, 6		11, 12, 14, 15, 16				
		1	2, 6		51, 52, 54, 55, 56				
		1	3, 7		02, 06				
		1	3, 7		12, 15, 16				
35									LABEL
	05121077AA	1	2, 6		01, 02, 06				
	05121077AB	1	3, 7		12, 15, 16				
		1	3, 7		02, 06				
		1	2, 6		11, 12, 14, 15, 16				
		1	2, 6		51, 52, 54, 55, 56				
36									PAD

SPRINTER (VA)

SERIES	LINE	BODY	ENGINE	TRANSMISSION
L = LOWLINE	3 = HD DODGE 2WD 6 = Lt. Duty DODGE 4WD 2 = Med. Duty DODGE 2WD 7 = Med. Duty DODGE 4WD	55 = Wagon 140" 54 = Wagon 118" 52 = Wagon 140" 51 = Wagon 118" 12 = Van 140" 11 = Van 118" 06 = Front Section 158" 14 = Van 118" 15 = Van 140" 16 = Van 158" 56 = Wagon 158" 01 = Chassis Forward Control 118" 02 = Chassis Forward Control 140"	EX8 = Engine-2.7L I5 Mercedes Turbo Diesel	DGJ = Transmission-5-Spd. Automatic,W5A580

AR = use ase required - = Non illustrrated part

Hevac Unit, Front
Figure 24-130

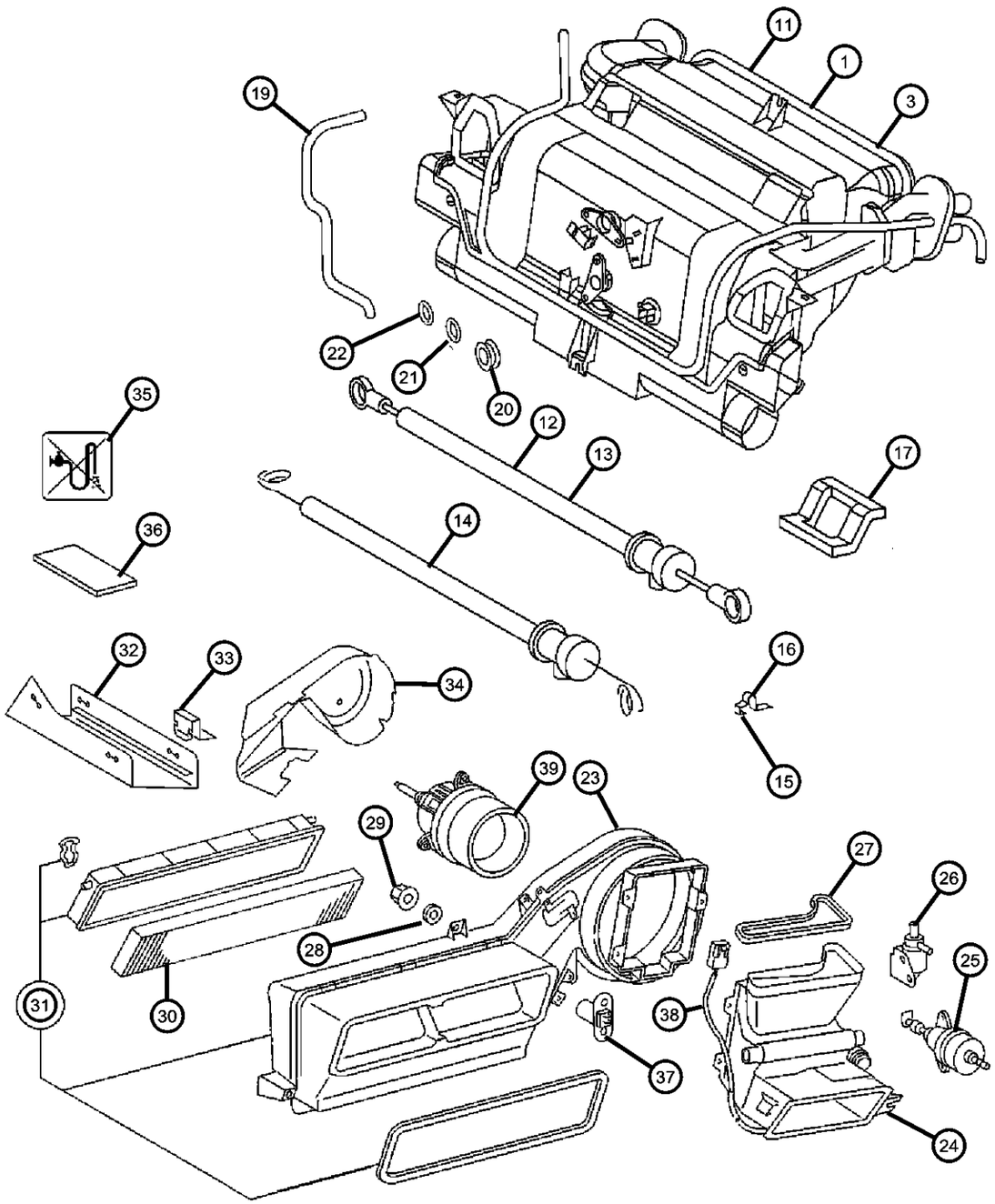

ITEM	PART NUMBER	QTY	LINE	SERIES	BODY	ENGINE	TRANS	TRIM	DESCRIPTION
	05133443AA	5	2, 6		11, 12, 14, 15, 16				
		5	2, 6		51, 52, 54, 55, 56				
		5	3, 7		15, 16, 12				
		4	2, 6		01, 02, 06				
		5	3, 7		02, 06				
37									RESISTOR, Blower Motor
	05133432AA	1	2, 6		11, 12, 14, 15, 16				
		1	2, 6		51, 52, 54, 55, 56				
		1	3, 7		12, 15, 16				
		1	2, 6		01, 02, 06				
38									CABLE
	05133437AA	1	2, 6		11, 12, 14, 15, 16				
		1	2, 6		51, 52, 54, 55, 56				
	05133471AA	1	3, 7		12, 15, 16				
		1	2, 6		01, 02, 06				
		1	3, 7		02, 06				
39									FAN
	05133435AA	1	2, 6		01, 02, 06				
		1	2, 6		11, 12, 14, 15, 16				
		1	2, 6		51, 52, 54, 55, 56				
		1	3, 7		02, 06				
		1	3, 7		12, 15, 16				

SPRINTER (VA)

SERIES	LINE	BODY	ENGINE	TRANSMISSION
L = LOWLINE	3 = HD DODGE 2WD 6 = Lt. Duty DODGE 4WD 2 = Med. Duty DODGE 2WD 7 = Med. Duty DODGE 4WD	55 = Wagon 140" 54 = Wagon 118" 52 = Wagon 140" 51 = Wagon 118" 12 = Van 140" 11 = Van 118" 06 = Front Section 158" 14 = Van 118" 15 = Van 140" 16 = Van 158" 56 = Wagon 158" 01 = Chassis Forward Control 118" 02 = Chassis Forward Control 140"	EX8 = Engine-2.7L I5 Mercedes Turbo Diesel	DGJ = Transmission-5-Spd. Automatic,W5A580

Heat Exchanger and Plumbing
Figure 24-250

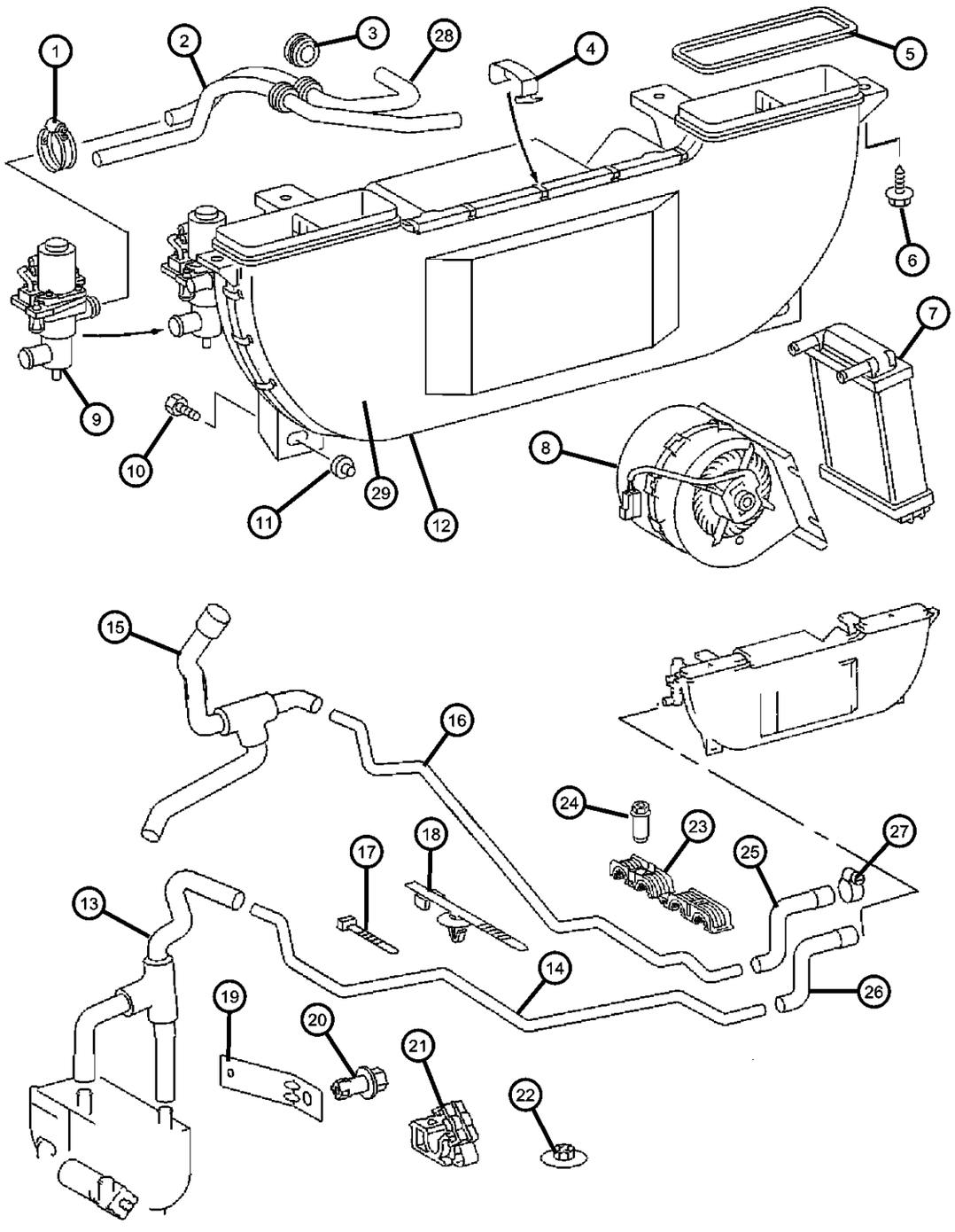

ITEM	PART NUMBER	QTY	LINE	SERIES	BODY	ENGINE	TRANS	TRIM	DESCRIPTION
1									CLAMP, Hose
	06104781AA	1	2, 6		11, 12, 14, 15, 16				
		1	2, 6		51, 52, 54, 55, 56				
		6	3, 7		12, 15, 16				
2									LINE, Heater
	05133587AA	1	2, 6		11, 12, 14, 15, 16				
		1	2, 6		51, 52, 54, 55, 56				
		1	3, 7		12, 15, 16				
3									GROMMET
	05133588AA	1	2, 6		11, 12, 14, 15, 16				
		1	2, 6		51, 52, 54, 55, 56				
		2	3, 7		12, 15, 16				
4									CLIP, HEATER
	05133592AA	22	2, 6		11, 12, 14, 15, 16				
		22	2, 6		51, 52, 54, 55, 56				
		22	3, 7		12, 15, 16				
5									GASKET, Heater duct
	05133593AA	1	2, 6		11, 12, 14, 15, 16				
		1	2, 6		51, 52, 54, 55, 56				
		1	3, 7		12, 15, 16				
6									SCREW, Tapping
	06104580AA	2	2, 6		11, 12, 14, 15, 16				
		2	2, 6		51, 52, 54, 55, 56				

SPRINTER (VA)

SERIES	LINE	BODY	ENGINE	TRANSMISSION
L = LOWLINE	3 = HD DODGE 2WD 6 = Lt. Duty DODGE 4WD 2 = Med. Duty DODGE 2WD 7 = Med. Duty DODGE 4WD	55 = Wagon 140" 54 = Wagon 118" 52 = Wagon 140" 51 = Wagon 118" 12 = Van 140" 11 = Van 118" 06 = Front Section 158" 14 = Van 118" 15 = Van 140" 16 = Van 158" 56 = Wagon 158" 01 = Chassis Forward Control 118" 02 = Chassis Forward Control 140"	EX8 = Engine-2.7L I5 Mercedes Turbo Diesel	DGJ = Transmission-5-Spd. Automatic,W5A580

Heat Exchanger and Plumbing
Figure 24-250

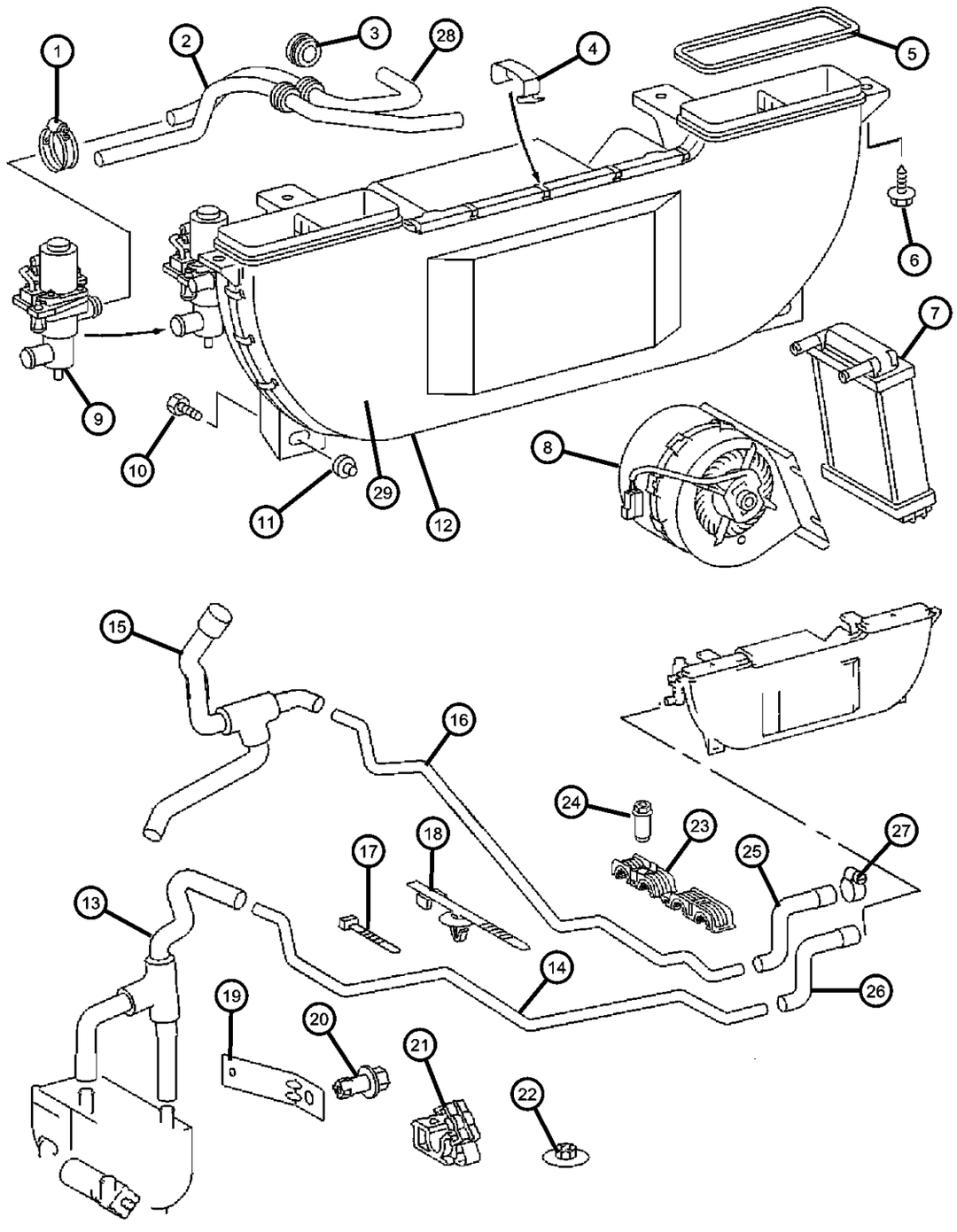

ITEM	PART NUMBER	QTY	LINE	SERIES	BODY	ENGINE	TRANS	TRIM	DESCRIPTION
		2	3, 7		12, 15, 16				
7									CORE, Heater
	05133586AA	1	2, 6		11, 12, 14, 15, 16				
		1	2, 6		51, 52, 54, 55, 56				
		1	3, 7		12, 15, 16				
8									BLOWER
	05103806AA	1	2, 6		11, 12, 14, 15, 16				
		1	2, 6		51, 52, 54, 55, 56				
		1	3, 7		12, 15, 16				
9									VALVE, Water
	05103770AA	1	2, 6		01, 02, 06				
		1	3, 7		02, 06				
	05103807AA	1	2, 6		11, 12, 14, 15, 16				
		1	2, 6		51, 52, 54, 55, 56				
		1	3, 7		12, 15, 16				
10									BOLT, Hex Head
	05126227AA	2	2, 6		01, 02, 06				
		2	2, 6		11, 12, 14, 15, 16				
		2	2, 6		51, 52, 54, 55, 56				
		2	3, 7		12, 15, 16				
11									RIVNUT, Installation
	05126258AA	2	2, 6		11, 12, 14, 15, 16				
		2	2, 6		51, 52, 54, 55, 56				

SPRINTER (VA)

SERIES	LINE	BODY	ENGINE	TRANSMISSION
L = LOWLINE	3 = HD DODGE 2WD 6 = Lt. Duty DODGE 4WD 2 = Med. Duty DODGE 2WD 7 = Med. Duty DODGE 4WD	55 = Wagon 140" 54 = Wagon 118" 52 = Wagon 140" 51 = Wagon 118" 12 = Van 140" 11 = Van 118" 06 = Front Section 158" 14 = Van 118" 15 = Van 140" 16 = Van 158" 56 = Wagon 158" 01 = Chassis Forward Control 118" 02 = Chassis Forward Control 140"	EX8 = Engine-2.7L I5 Mercedes Turbo Diesel	DGJ = Transmission-5-Spd. Automatic,W5A580

Heat Exchanger and Plumbing
Figure 24-250

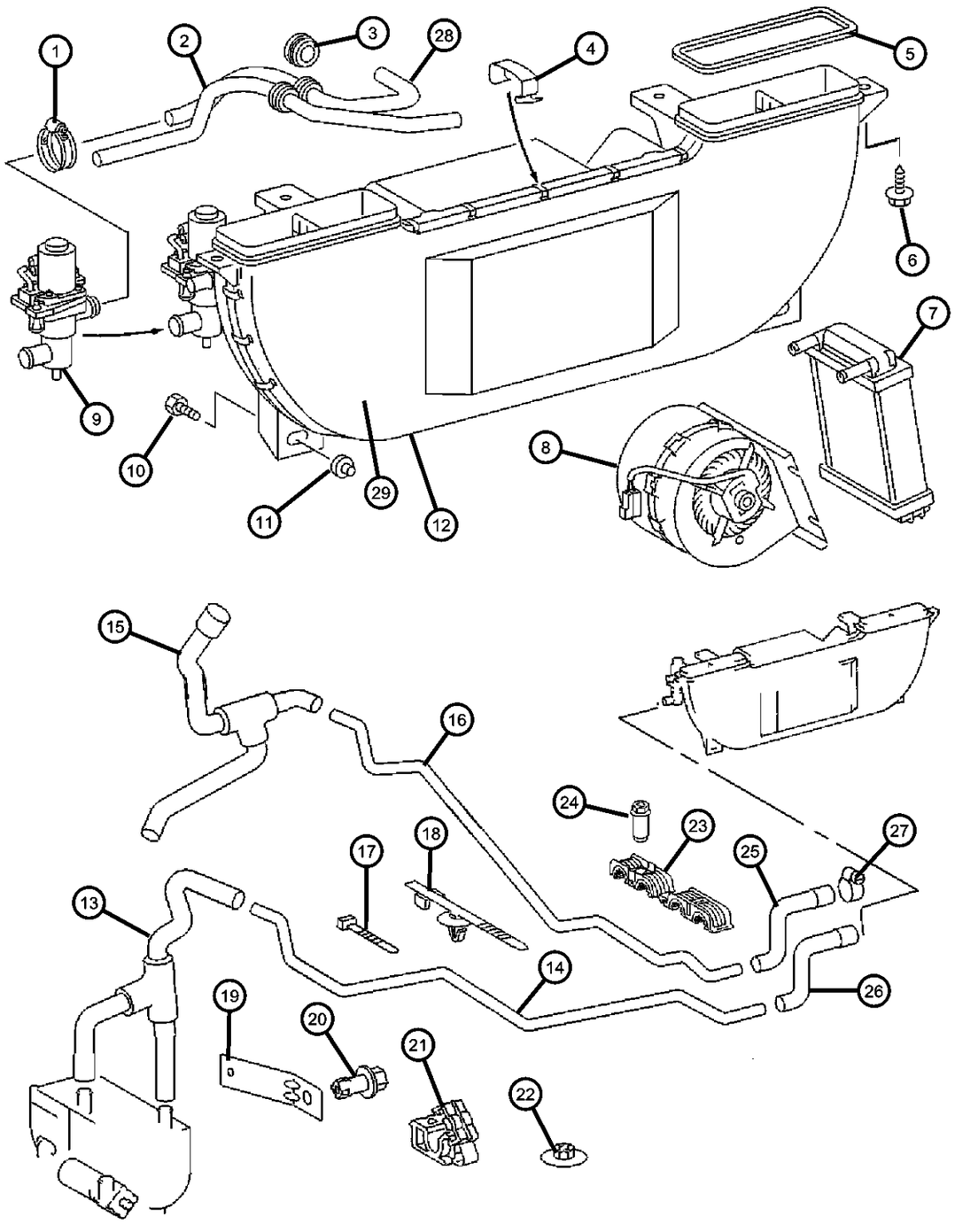

ITEM	PART NUMBER	QTY	LINE	SERIES	BODY	ENGINE	TRANS	TRIM	DESCRIPTION
		2	3, 7		12, 15, 16				
12									HEATER
	05124700AA	1	2, 6		11, 12, 14, 15, 16				
		1	2, 6		51, 52, 54, 55, 56				
		1	3, 7		12, 15, 16				
13									HOSE, Auxiliary Heater
	05124886AA	1	2, 6		11, 12, 14, 15, 16				
		1	2, 6		51, 52, 54, 55, 56				
		1	3, 7		12, 15, 16				
14									TUBE, Heater
	05124826AA	1	2, 6		11, 12, 14, 15, 16				
		1	2, 6		51, 52, 54, 55, 56				
		1	3, 7		12, 15, 16				
15									HOSE
	05124837AA	1	2, 6		01, 02, 06				
		1	2, 6		11, 12, 14, 15, 16				
		1	2, 6		51, 52, 54, 55, 56				
		1	3, 7		02, 06				
		1	3, 7		12, 15, 16				
16									TUBE, Heater
	05124820AA	1	2, 6		11, 12, 14, 15, 16				
		1	2, 6		51, 52, 54, 55, 56				
		1	3, 7		12, 15, 16				

SPRINTER (VA)

SERIES	LINE	BODY	ENGINE	TRANSMISSION
L = LOWLINE	3 = HD DODGE 2WD 6 = Lt. Duty DODGE 4WD 2 = Med. Duty DODGE 2WD 7 = Med. Duty DODGE 4WD	55 = Wagon 140" 54 = Wagon 118" 52 = Wagon 140" 51 = Wagon 118" 12 = Van 140" 11 = Van 118" 06 = Front Section 158" 14 = Van 118" 15 = Van 140" 16 = Van 158" 56 = Wagon 158" 01 = Chassis Forward Control 118" 02 = Chassis Forward Control 140"	EX8 = Engine-2.7L I5 Mercedes Turbo Diesel	DGJ = Transmission-5-Spd. Automatic,W5A580

Heat Exchanger and Plumbing
Figure 24-250

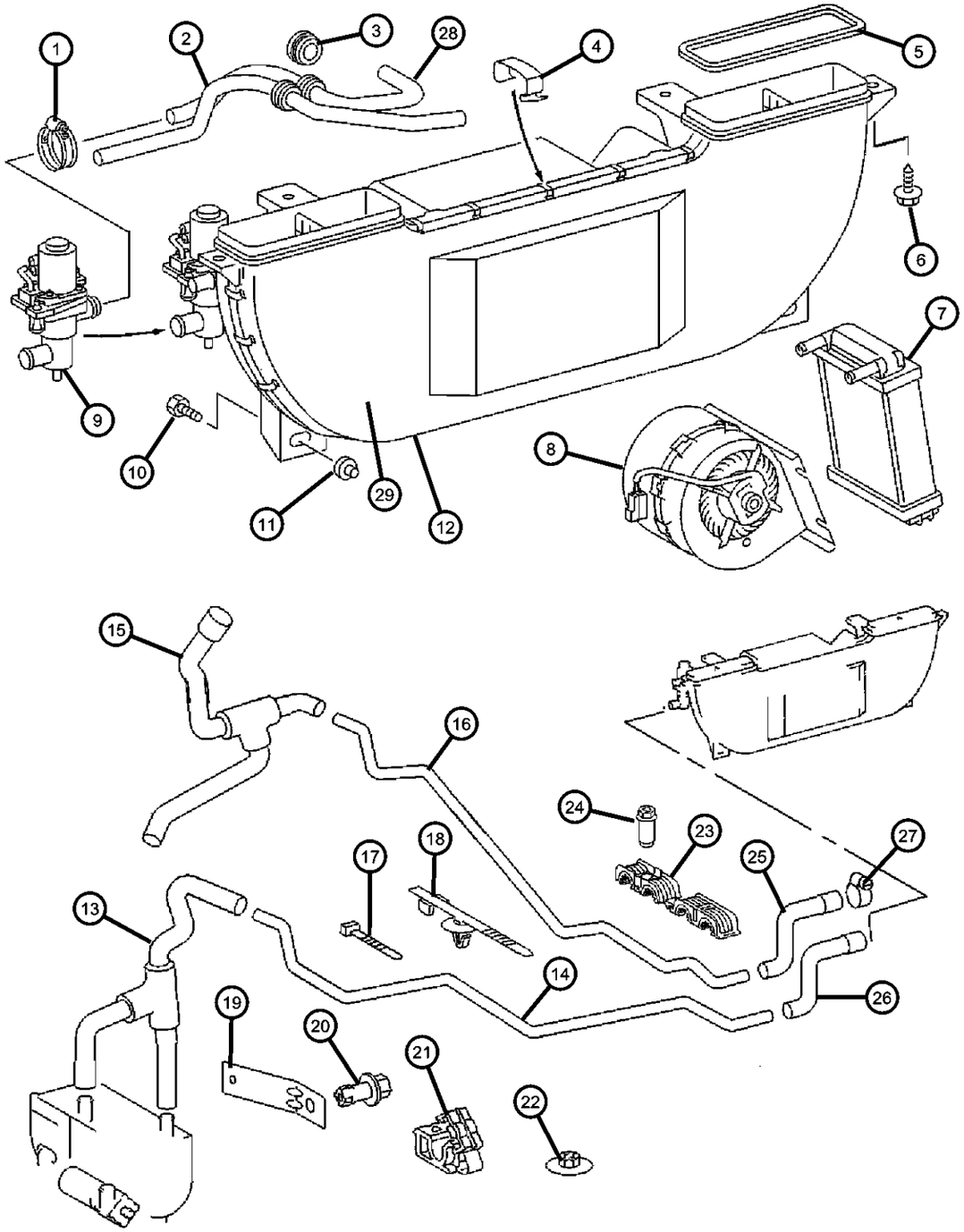

ITEM	PART NUMBER	QTY	LINE	SERIES	BODY	ENGINE	TRANS	TRIM	DESCRIPTION
17									STRAP, Tie
	05080475AB	1	2, 6		11, 12, 14, 15, 16				
		1	2, 6		51, 52, 54, 55, 56				
		1	3, 7		12, 15, 16				
18									STRAP, Tie
	05126053AA	2	2, 6		11, 12, 14, 15, 16				
		2	3, 7		12, 15, 16				
		2	2, 6		01, 02, 06				
		2	2, 6		51, 52, 54, 55, 56				
		1	3, 7		02, 06				
		1	3, 7		12, 15, 16				
19									BRACKET, Recirculating Pump
	05124814AA	1	2, 6		11, 12, 14, 15, 16				
		1	2, 6		51, 52, 54, 55, 56				
		1	3, 7		12, 15, 16				
20									NUT, Push In
	05125594AA	1	2, 6		11, 12, 14, 15, 16				
		1	2, 6		51, 52, 54, 55, 56				
		1	3, 7		12, 15, 16				
21									CLAMP, Heater Hose
	05125886AA	3	2, 6		11, 12, 14, 15, 16				
		3	2, 6		51, 52, 54, 55, 56				
		3	3, 7		12, 15, 16				

SPRINTER (VA)

SERIES	LINE	BODY	ENGINE	TRANSMISSION
L = LOWLINE	3 = HD DODGE 2WD 6 = Lt. Duty DODGE 4WD 2 = Med. Duty DODGE 2WD 7 = Med. Duty DODGE 4WD	55 = Wagon 140" 54 = Wagon 118" 52 = Wagon 140" 51 = Wagon 118" 12 = Van 140" 11 = Van 118" 06 = Front Section 158" 14 = Van 118" 15 = Van 140" 16 = Van 158" 56 = Wagon 158" 01 = Chassis Forward Control 118" 02 = Chassis Forward Control 140"	EX8 = Engine-2.7L I5 Mercedes Turbo Diesel	DGJ = Transmission-5-Spd. Automatic,W5A580

Heat Exchanger and Plumbing
Figure 24-250

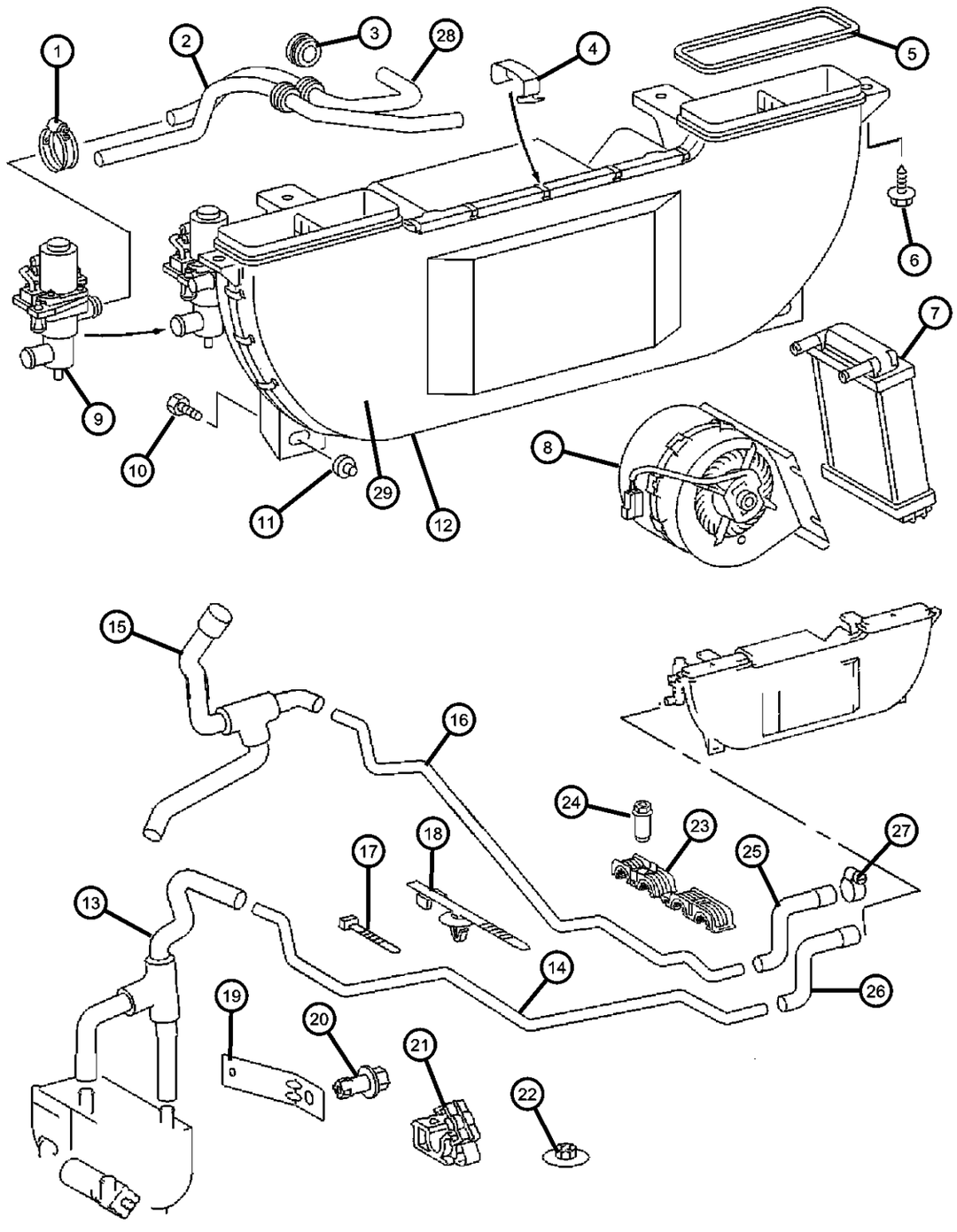

ITEM	PART NUMBER	QTY	LINE	SERIES	BODY	ENGINE	TRANS	TRIM	DESCRIPTION
22									PLUG, Button
	05125592AA	1	2, 6		51, 52, 54, 55, 56				
		1	2, 6		01, 02, 06				
		1	2, 6		11, 12, 14, 15, 16				
		1	3, 7		02, 06				
		1	3, 7		12, 15, 16				
23									CLAMP, Heater Hose
	05125882AA	5	2, 6		11, 12, 14, 15, 16				
		5	2, 6		51, 52, 54, 55, 56				
		5	3, 7		12, 15, 16				
24									NUT, Heater
	06104910AA	5	2, 6		11, 12, 14, 15, 16				
		5	2, 6		51, 52, 54, 55, 56				
		5	3, 7		12, 15, 16				
25									HOSE, Heater
	05124841AA	1	2, 6		11, 12, 14, 15, 16				
		1	2, 6		51, 52, 54, 55, 56				
		1	3, 7		12, 15, 16				
26									HOSE, Heater
	05124885AA	1	2, 6		11, 12, 14, 15, 16				
		1	2, 6		51, 52, 54, 55, 56				
		1	3, 7		12, 15, 16				
27									CLAMP

SPRINTER (VA)

SERIES	LINE	BODY	ENGINE	TRANSMISSION
L = LOWLINE	3 = HD DODGE 2WD 6 = Lt. Duty DODGE 4WD 2 = Med. Duty DODGE 2WD 7 = Med. Duty DODGE 4WD	55 = Wagon 140" 54 = Wagon 118" 52 = Wagon 140" 51 = Wagon 118" 12 = Van 140" 11 = Van 118" 06 = Front Section 158" 14 = Van 118" 15 = Van 140" 16 = Van 158" 56 = Wagon 158" 01 = Chassis Forward Control 118" 02 = Chassis Forward Control 140"	EX8 = Engine-2.7L I5 Mercedes Turbo Diesel	DGJ = Transmission-5-Spd. Automatic,W5A580

Heat Exchanger and Plumbing
Figure 24-250

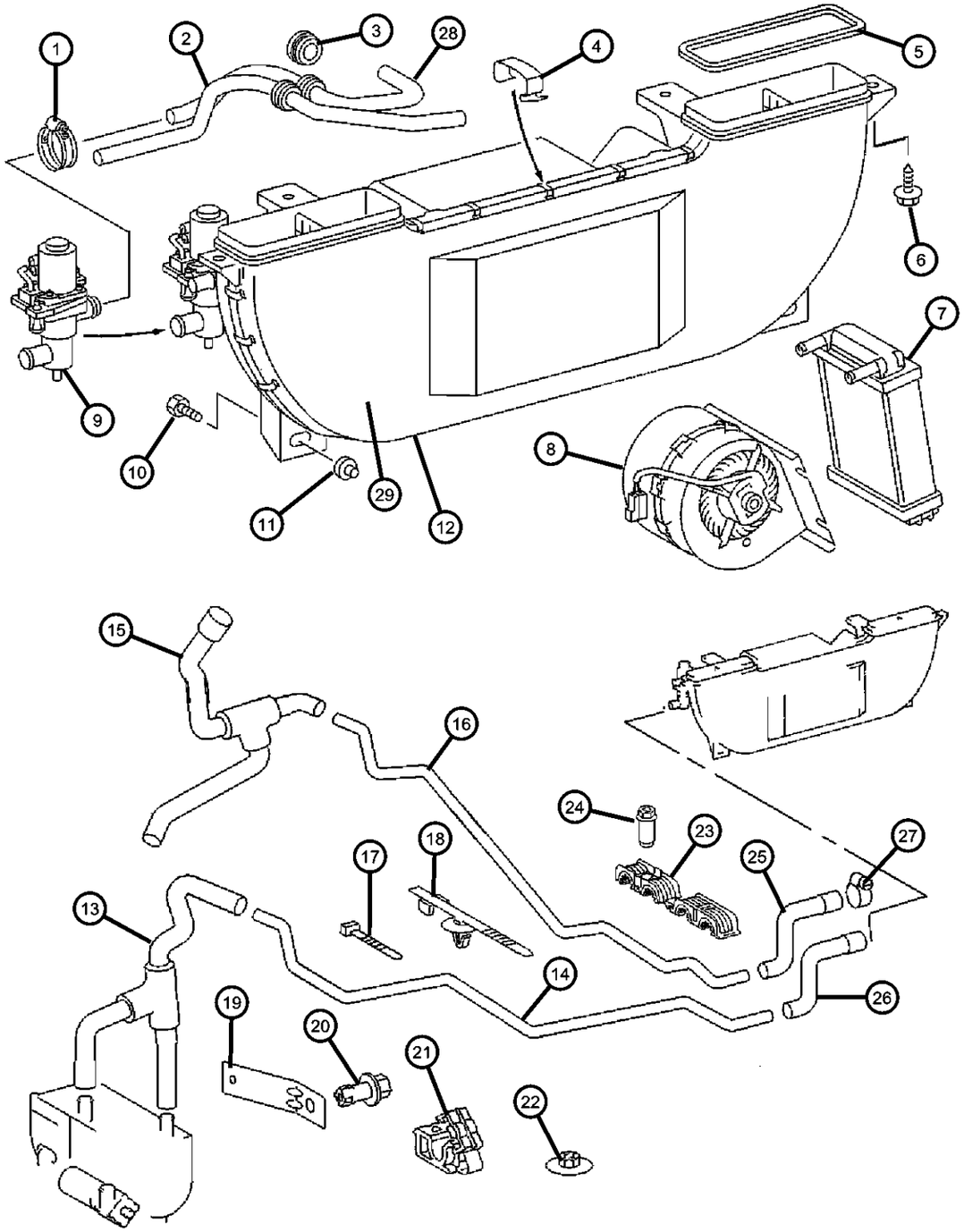

ITEM	PART NUMBER	QTY	LINE	SERIES	BODY	ENGINE	TRANS	TRIM	DESCRIPTION
	06104780AA	1	2, 6		11, 12, 14, 15, 16				
		1	2, 6		51, 52, 54, 55, 56				
		1	3, 7		12, 15, 16				
28	05133889AA	1	3, 7		12, 15, 16				HOSE, Heater
29									COVER
	05133591AA	1	2, 6		11, 12, 14, 15, 16				
		1	2, 6		51, 52, 54, 55, 56				
		1	3, 7		12, 15, 16				

SPRINTER (VA)

SERIES	LINE	BODY	ENGINE	TRANSMISSION
L = LOWLINE	3 = HD DODGE 2WD 6 = Lt. Duty DODGE 4WD 2 = Med. Duty DODGE 2WD 7 = Med. Duty DODGE 4WD	55 = Wagon 140" 54 = Wagon 118" 52 = Wagon 140" 51 = Wagon 118" 12 = Van 140" 11 = Van 118" 06 = Front Section 158" 14 = Van 118" 15 = Van 140" 16 = Van 158" 56 = Wagon 158" 01 = Chassis Forward Control 118" 02 = Chassis Forward Control 140"	EX8 = Engine-2.7L I5 Mercedes Turbo Diesel	DGJ = Transmission-5-Spd. Automatic,W5A580

AR = use ase required - = Non illustrrated part

Plumbing, Heater
Figure 24-260

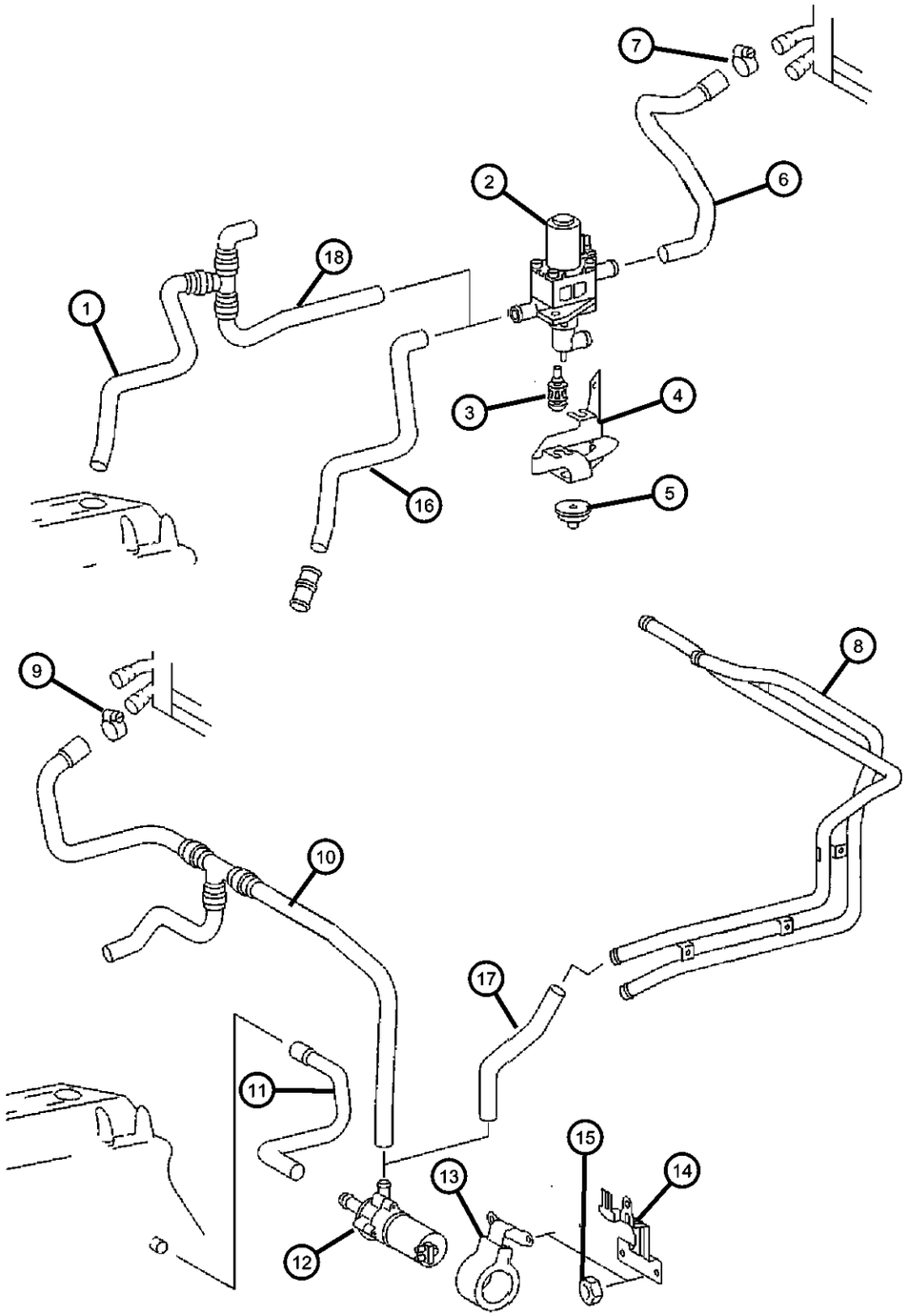

ITEM	PART NUMBER	QTY	LINE	SERIES	BODY	ENGINE	TRANS	TRIM	DESCRIPTION
1									HOSE
	05124858AA	1	2, 6		51, 52, 54, 55, 56				
		1	3, 7		12, 15, 16				
		1	2, 6		11, 12, 14, 15, 16				
2									VALVE, Water
	05103770AA	1	2, 6		01, 02, 06				
		1	2, 6		11, 12, 14, 15, 16				
		1	2, 6		51, 52, 54, 55, 56				
		1	3, 7		02, 06				
		1	3, 7		12, 15, 16				
3									GROMMET
	05096558AA	2	2, 6		01, 02, 06				
		2	2, 6		11, 12, 14, 15, 16				
		2	2, 6		51, 52, 54, 55, 56				
		2	3, 7		12, 15, 16				
4									BRACKET, Recirculating Pump
	05124791AA	1	2, 6		51, 52, 54, 55, 56				
		1	2, 6		01, 02, 06				
		1	2, 6		11, 12, 14, 15, 16				
		1	3, 7		12, 15, 16				
5									BUMPER, Rubber
	05125504AA	1	2, 6		01, 02, 06				
		1	2, 6		11, 12, 14, 15, 16				
		1	2, 6		54, 55, 56, 51, 52				

SPRINTER (VA)

SERIES	LINE	BODY	ENGINE	TRANSMISSION
L = LOWLINE	3 = HD DODGE 2WD 6 = Lt. Duty DODGE 4WD 2 = Med. Duty DODGE 2WD 7 = Med. Duty DODGE 4WD	55 = Wagon 140" 54 = Wagon 118" 52 = Wagon 140" 51 = Wagon 118" 12 = Van 140" 11 = Van 118" 06 = Front Section 158" 14 = Van 118" 15 = Van 140" 16 = Van 158" 56 = Wagon 158" 01 = Chassis Forward Control 118" 02 = Chassis Forward Control 140"	EX8 = Engine-2.7L I5 Mercedes Turbo Diesel	DGJ = Transmission-5-Spd. Automatic,W5A580

Plumbing, Heater
Figure 24-260

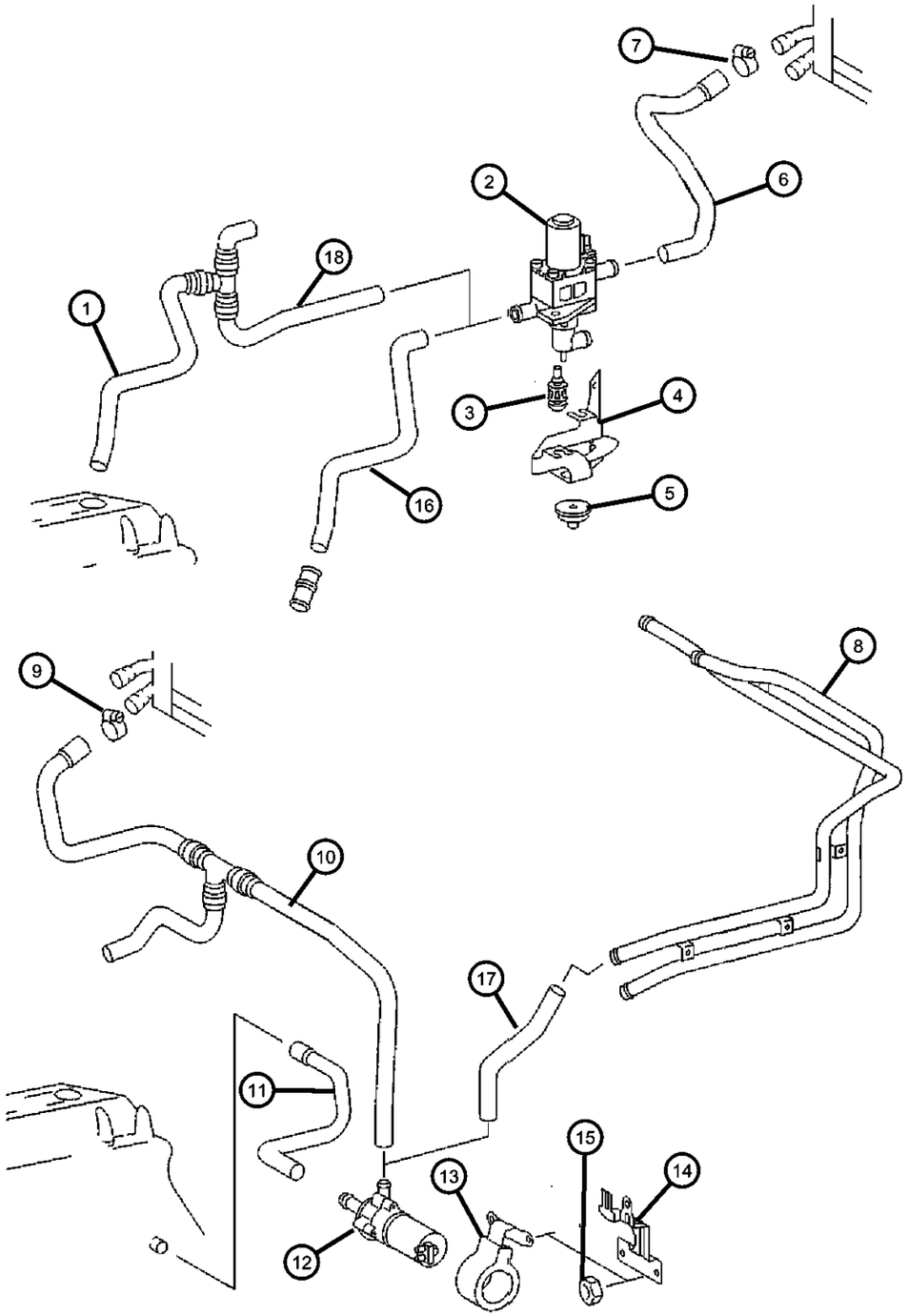

ITEM	PART NUMBER	QTY	LINE	SERIES	BODY	ENGINE	TRANS	TRIM	DESCRIPTION
		1	3, 7		12, 15, 16				
6									HOSE
	05124846AA	1	2, 6		01, 02, 06				
		1	2, 6		11, 12, 14, 15, 16				
		1	2, 6		54, 55, 56, 51, 52				
		1	3, 7		12, 15, 16				
7									CLAMP, CLAMP
	05126287AA	11	2, 6		01, 02, 06	EX8			
		11	2, 6		11, 12, 14, 15, 16	EX8			
		11	3, 7		02, 06	EX8			
		11	3, 7		12, 15, 16	EX8			
		11	2, 6		51, 52, 54, 55, 56	EX8			
8									TUBE, Heater
	05124644AA	1	2, 6		01, 02, 06				
		1	2, 6		11, 12, 14, 15, 16				
		1	2, 6		51, 52, 54, 55, 56				
		1	3, 7		12, 15, 16				
9									CLAMP, Heater Hose
	05104681AA	3	2, 6		01, 02, 06	EX9, EX8			
		3	2, 6		11, 12, 14, 15, 16	EX8, EX9			
		3	2, 6		51, 52, 54, 55, 56	EX8, EX9			
		3	3, 7		15, 16, 12	EX8, EX9			
		3	3, 7		02, 06	EX8, EX9			
10									HOSE

SPRINTER (VA)

SERIES	LINE	BODY	ENGINE	TRANSMISSION
L = LOWLINE	3 = HD DODGE 2WD 6 = Lt. Duty DODGE 4WD 2 = Med. Duty DODGE 2WD 7 = Med. Duty DODGE 4WD	55 = Wagon 140" 54 = Wagon 118" 52 = Wagon 140" 51 = Wagon 118" 12 = Van 140" 11 = Van 118" 06 = Front Section 158" 14 = Van 118" 15 = Van 140" 16 = Van 158" 56 = Wagon 158" 01 = Chassis Forward Control 118" 02 = Chassis Forward Control 140"	EX8 = Engine-2.7L I5 Mercedes Turbo Diesel	DGJ = Transmission-5-Spd. Automatic,W5A580

Plumbing, Heater
Figure 24-260

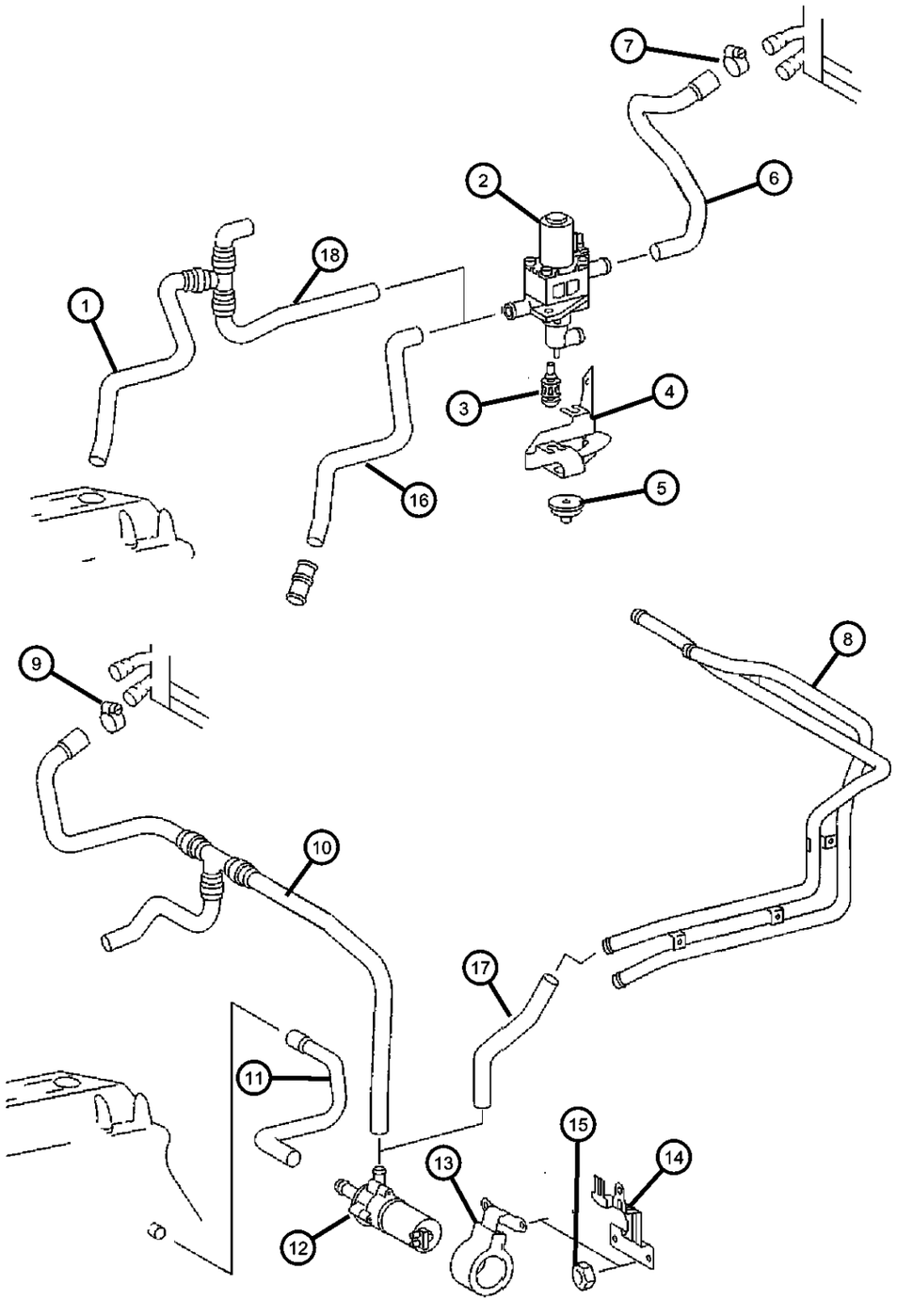

ITEM	PART NUMBER	QTY	LINE	SERIES	BODY	ENGINE	TRANS	TRIM	DESCRIPTION
	05124842AA	1	2, 6		01, 02, 06				
		1	2, 6		11, 12, 14, 15, 16				
		1	2, 6		51, 52, 54, 55, 56				
		1	3, 7		02, 06				
		1	3, 7		12, 15, 16				
11									HOSE
	05124867AA	1	2, 6		01, 02, 06				
		1	2, 6		11, 12, 14, 15, 16				
		1	2, 6		51, 52, 54, 55, 56				
		1	3, 7		12, 15, 16				
12									PUMP, Recirculating
	05098398AA	1	2, 6		14, 15, 16, 11, 12				
		1	2, 6		51, 52, 54, 55, 56				
		1	3, 7		02, 06	EX8, EX9			
		1	2, 6		01, 02, 06				
		1	3, 7		12, 15, 16	EX8, EX9			
13									BRACKET
	05124629AA	1	2, 6		01, 02, 06				
	05124629AB	1	2, 6		11, 12, 14, 15, 16				
		1	2, 6		51, 52, 54, 55, 56				
		1	3, 7		12, 15, 16	EX9			
14									BRACKET, Recirculating Pump
	05124808AA	1	2, 6		01, 02, 06	EX8, EX9			
		1	2, 6		11, 12, 14, 15, 16	EX8, EX9			

SPRINTER (VA)

SERIES	LINE	BODY	ENGINE	TRANSMISSION
L = LOWLINE	3 = HD DODGE 2WD 6 = Lt. Duty DODGE 4WD 2 = Med. Duty DODGE 2WD 7 = Med. Duty DODGE 4WD	55 = Wagon 140" 54 = Wagon 118" 52 = Wagon 140" 51 = Wagon 118" 12 = Van 140" 11 = Van 118" 06 = Front Section 158" 14 = Van 118" 15 = Van 140" 16 = Van 158" 56 = Wagon 158" 01 = Chassis Forward Control 118" 02 = Chassis Forward Control 140"	EX8 = Engine-2.7L I5 Mercedes Turbo Diesel	DGJ = Transmission-5-Spd. Automatic,W5A580

Plumbing, Heater
Figure 24-260

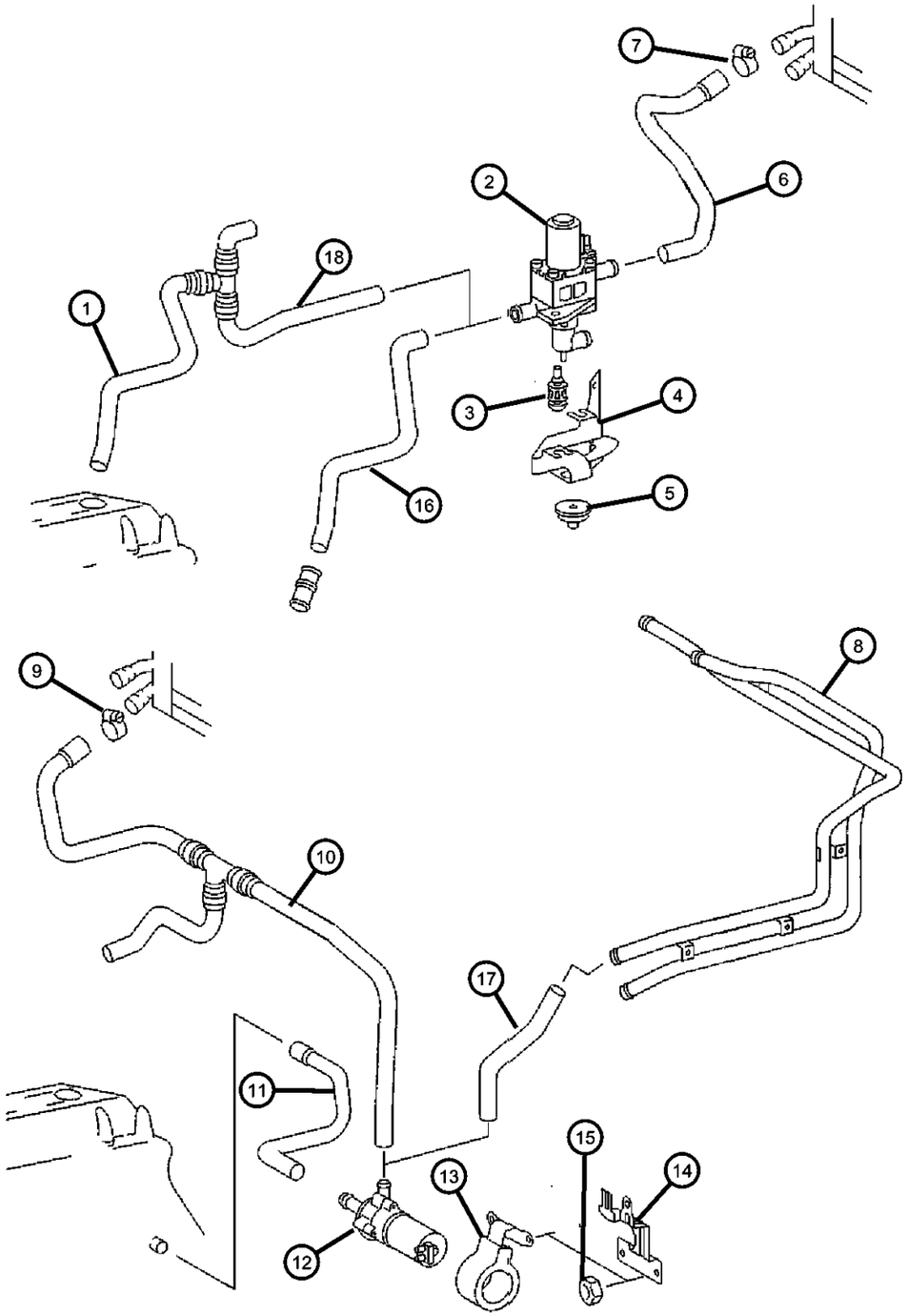

ITEM	PART NUMBER	QTY	LINE	SERIES	BODY	ENGINE	TRANS	TRIM	DESCRIPTION
		1	2, 6		51, 52, 54, 55, 56	EX8, EX9			
		1	3, 7		02, 06	EX8, EX9			
		1	3, 7		12, 15, 16	EX8, EX9			
15	05127449AA	1							NUT, Hex, M6
16									HOSE
	05124844AA	1	2, 6		52, 54, 55, 56, 51				
		1	3, 7		02, 06				
		1	3, 7		12, 15, 16				
		1	2, 6		01, 02, 06				
		1	2, 6		11, 12, 14, 15, 16				
17									HOSE
	05124848AA	1	2, 6		01, 02, 06				
		1	2, 6		11, 12, 14, 15, 16				
		1	2, 6		51, 52, 54, 55, 56				
		1	3, 7		12, 15, 16				
18									HOSE, Flexible Exhaust, Supplemental Heater
	05125981AA	1	2, 6		01, 02, 06	EX8, EX9			
		1	3, 7		02, 06	EX8, EX9			
		1	3, 7		12, 15, 16	EX9, EX8			
		1	2, 6		11, 12, 14, 15, 16	EX8, EX9			
		1	2, 6		51, 52, 54, 55, 56	EX8, EX9			

SPRINTER (VA)

SERIES	LINE	BODY	ENGINE	TRANSMISSION
L = LOWLINE	3 = HD DODGE 2WD 6 = Lt. Duty DODGE 4WD 2 = Med. Duty DODGE 2WD 7 = Med. Duty DODGE 4WD	55 = Wagon 140" 54 = Wagon 118" 52 = Wagon 140" 51 = Wagon 118" 12 = Van 140" 11 = Van 118" 06 = Front Section 158" 14 = Van 118" 15 = Van 140" 16 = Van 158" 56 = Wagon 158" 01 = Chassis Forward Control 118" 02 = Chassis Forward Control 140"	EX8 = Engine-2.7L I5 Mercedes Turbo Diesel	DGJ = Transmission-5-Spd. Automatic,W5A580

Plumbing, Heater with Auxiliary warm water Heater
Figure 24-265

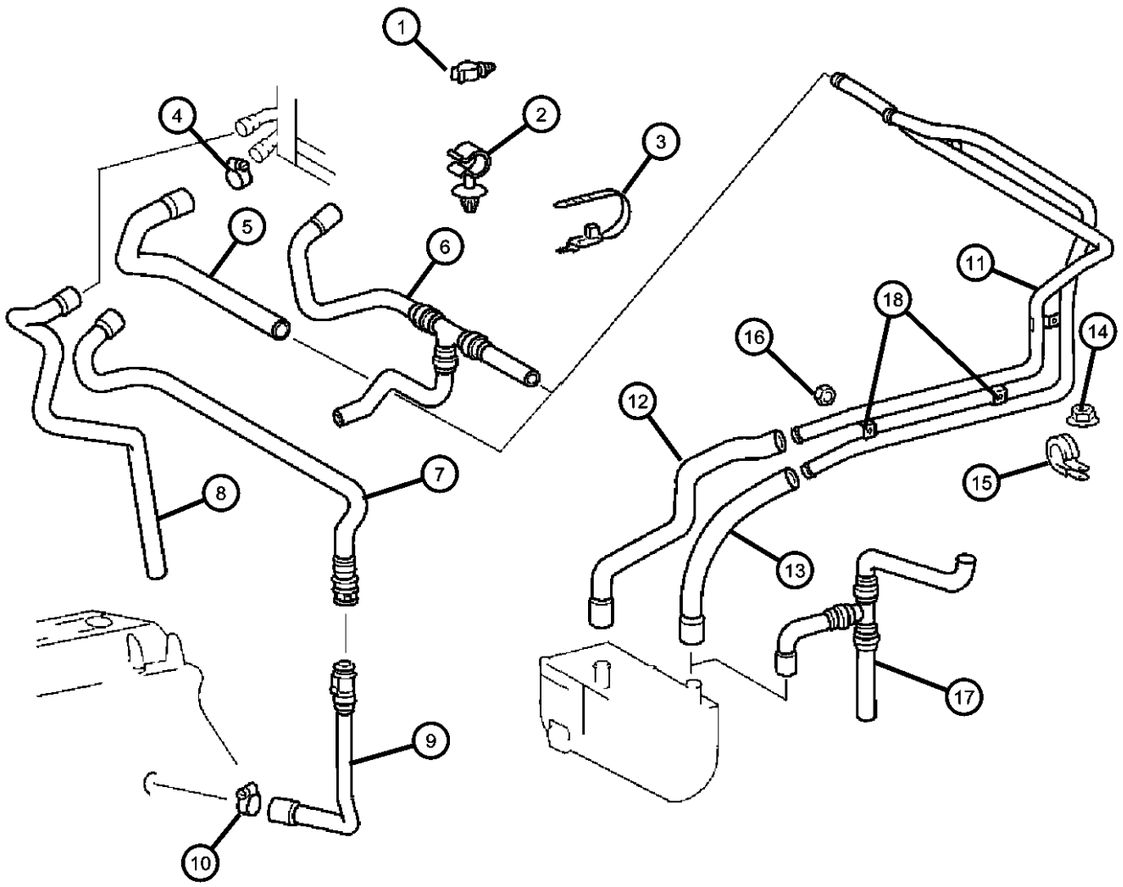

ITEM	PART NUMBER	QTY	LINE	SERIES	BODY	ENGINE	TRANS	TRIM	DESCRIPTION
1									CLIP, Hose
	05124806AA	1	2, 6		02, 06, 01				
		1	2, 6		11, 12, 14, 15, 16				
		1	2, 6		51, 52, 54, 55, 56				
		1	3, 7		02, 06				
		1	3, 7		12, 15, 16				
2									CLIP, Hose
	05117649AA	1	2, 6		01, 02, 06				
		1	2, 6		11, 12, 14, 15, 16				
		1	2, 6		51, 52, 54, 55, 56				
		1	3, 7		12, 15, 16				
3									STRAP AND CLIP
	05133297AA	99	2, 6		11, 12, 14, 15, 16				
		99	2, 6		51, 52, 54, 55, 56				
		99	2, 6		01, 02, 06				
		99	3, 7		12, 15, 16				
4									CLAMP, Heater Hose
	05104681AB	3	2, 6		51, 52, 54, 55, 56	EX9			
		3	3, 7		12, 15, 16	EX9			
		3	2, 6		01, 02, 06	EX9			
		3	2, 6		16, 11, 12, 14, 15	EX9			
5									HOSE
	05124854AA	1	2, 6		01, 02, 06				
		1	2, 6		11, 12, 14, 15, 16				

SPRINTER (VA)

SERIES	LINE	BODY	ENGINE	TRANSMISSION
L = LOWLINE	3 = HD DODGE 2WD 6 = Lt. Duty DODGE 4WD 2 = Med. Duty DODGE 2WD 7 = Med. Duty DODGE 4WD	55 = Wagon 140" 54 = Wagon 118" 52 = Wagon 140" 51 = Wagon 118" 12 = Van 140" 11 = Van 118" 06 = Front Section 158" 14 = Van 118" 15 = Van 140" 16 = Van 158" 56 = Wagon 158" 01 = Chassis Forward Control 118" 02 = Chassis Forward Control 140"	EX8 = Engine-2.7L I5 Mercedes Turbo Diesel	DGJ = Transmission-5-Spd. Automatic,W5A580

Plumbing, Heater with Auxiliary warm water Heater
Figure 24-265

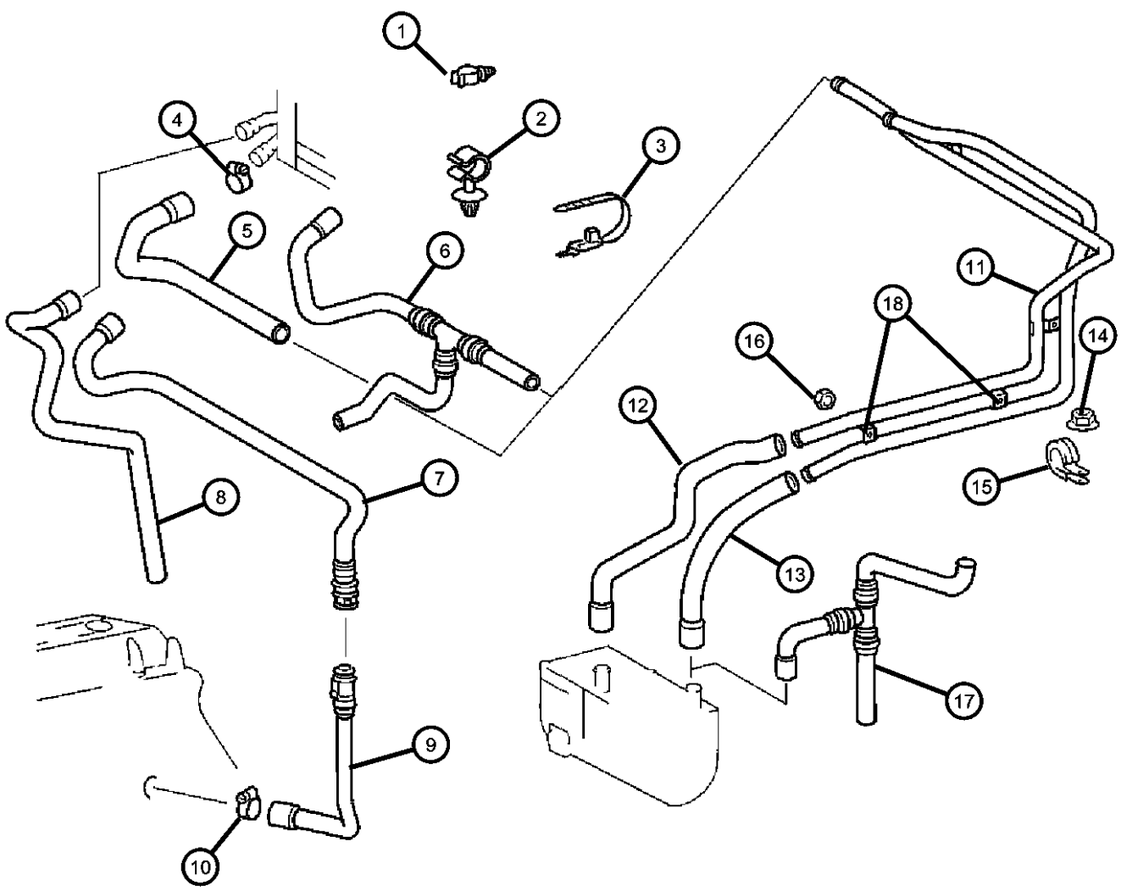

ITEM	PART NUMBER	QTY	LINE	SERIES	BODY	ENGINE	TRANS	TRIM	DESCRIPTION
		1	2, 6		51, 52, 54, 55, 56				
		1	3, 7		02, 06				
		1	3, 7		12, 15, 16				
6									HOSE
	05124837AA	1	2, 6		11, 12, 14, 15, 16				
		1	2, 6		51, 52, 54, 55, 56				
		1	3, 7		02, 06				
		1	3, 7		12, 15, 16				
		1	2, 6		01, 02, 06				
7									HOSE
	05104481AA	1	2, 6		01, 02, 06	EX9			
		1	2, 6		51, 52, 54, 55, 56	EX8, EX9			
		1	3, 7		02, 06	EX8, EX9			
		1	2, 6		01, 02, 06	EX8, EX9			
		1	2, 6		11, 12, 14, 15, 16	EX8, EX9			
		1	3, 7		12, 15, 16	EX8, EX9			
8									HOSE
	05104489AA	1	2, 6		01, 02, 06	EX8, EX9			
		1	2, 6		11, 12, 14, 15, 16	EX8, EX9			
		1	2, 6		51, 52, 54, 55, 56	EX8, EX9			
		1	3, 7		02, 06	EX8, EX9			
		1	3, 7		12, 15, 16	EX8, EX9			
9									HOSE, HOSE-WATER
	05124866AA	1	2, 6		11, 12, 14, 15, 16	EX9			

SPRINTER (VA)

SERIES	LINE	BODY	ENGINE	TRANSMISSION
L = LOWLINE	3 = HD DODGE 2WD 6 = Lt. Duty DODGE 4WD 2 = Med. Duty DODGE 2WD 7 = Med. Duty DODGE 4WD	55 = Wagon 140" 54 = Wagon 118" 52 = Wagon 140" 51 = Wagon 118" 12 = Van 140" 11 = Van 118" 06 = Front Section 158" 14 = Van 118" 15 = Van 140" 16 = Van 158" 56 = Wagon 158" 01 = Chassis Forward Control 118" 02 = Chassis Forward Control 140"	EX8 = Engine-2.7L I5 Mercedes Turbo Diesel	DGJ = Transmission-5-Spd. Automatic,W5A580

Plumbing, Heater with Auxiliary warm water Heater
Figure 24-265

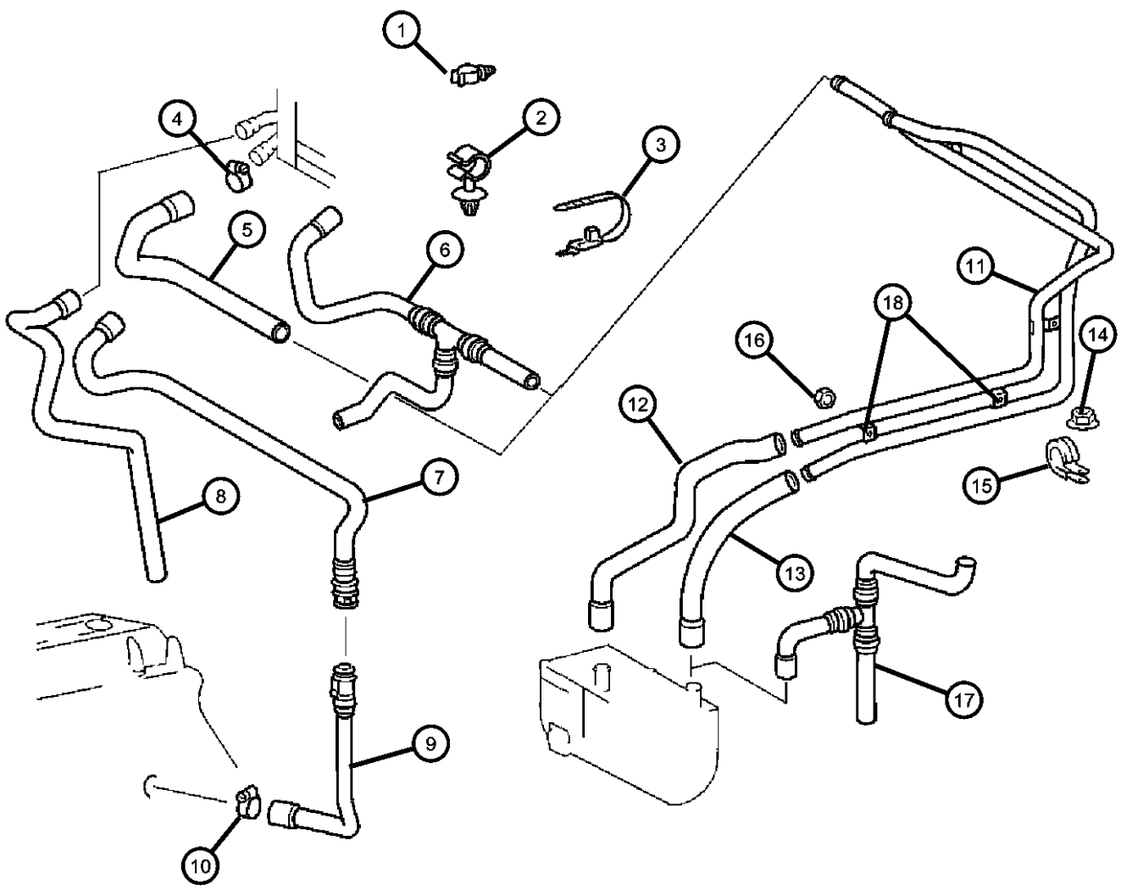

ITEM	PART NUMBER	QTY	LINE	SERIES	BODY	ENGINE	TRANS	TRIM	DESCRIPTION
		1	2, 6		51, 52, 54, 55, 56	EX9			
		1	3, 7		12, 15, 16	EX9			
		1	2, 6		01, 02, 06	EX9			
10									CLAMP, CLAMP
	05126287AA	6	2, 6		01, 02, 06	EX8, EX9			
		6	2, 6		56, 51, 52, 54, 55	EX8, EX9			
		6	2, 6		11, 12, 14, 15, 16	EX8, EX9			
		6	3, 7		12, 15, 16	EX8, EX9			
		6	3, 7		02, 06	EX8, EX9			
11									TUBE, Heater
	05124644AA	1	2, 6		01, 02, 06				
		1	2, 6		11, 12, 14, 15, 16				
		1	2, 6		51, 52, 54, 55, 56				
		1	3, 7		12, 15, 16				
12									HOSE
	05124850AA	1	2, 6		01, 02, 06				
		1	2, 6		11, 12, 14, 15, 16				
		1	2, 6		51, 52, 54, 55, 56				
		1	3, 7		02, 06				
		1	3, 7		12, 15, 16				
13									HOSE
	05124852AA	1	3, 7		12, 15, 16				
		1	2, 6		01, 02, 06				
14									NUT, Hex

SPRINTER (VA)

SERIES	LINE	BODY	ENGINE	TRANSMISSION
L = LOWLINE	3 = HD DODGE 2WD 6 = Lt. Duty DODGE 4WD 2 = Med. Duty DODGE 2WD 7 = Med. Duty DODGE 4WD	55 = Wagon 140" 54 = Wagon 118" 52 = Wagon 140" 51 = Wagon 118" 12 = Van 140" 11 = Van 118" 06 = Front Section 158" 14 = Van 118" 15 = Van 140" 16 = Van 158" 56 = Wagon 158" 01 = Chassis Forward Control 118" 02 = Chassis Forward Control 140"	EX8 = Engine-2.7L I5 Mercedes Turbo Diesel	DGJ = Transmission-5-Spd. Automatic,W5A580

AR = use ase required - = Non illustrrated part

Plumbing, Heater with Auxiliary warm water Heater
Figure 24-265

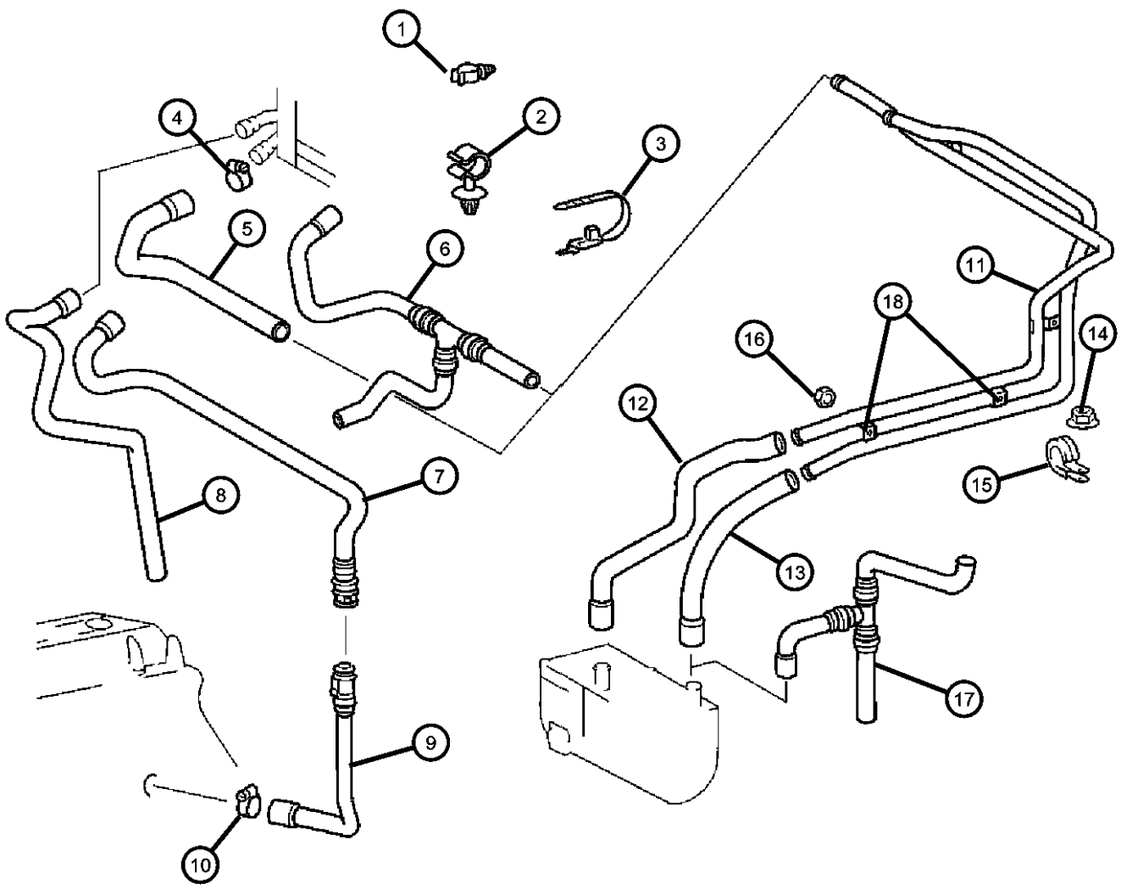

ITEM	PART NUMBER	QTY	LINE	SERIES	BODY	ENGINE	TRANS	TRIM	DESCRIPTION
	06104911AA	1	2, 6		11, 12, 14, 15, 16				
		1	2, 6		01, 02, 06				
		1	2, 6		54, 55, 56, 51, 52				
		1	3, 7		12, 15, 16				
15									CLAMP, Air Conditioning Piping
	05126284AA	1	2, 6		01, 02, 06				
		1	2, 6		11, 12, 14, 15, 16				
		1	2, 6		51, 52, 54, 55, 56				
		1	3, 7		12, 15, 16				
16									NUT, Hex, M6
	05096978AA	1	2, 6		01, 02, 06				
		2	2, 6		11, 12, 14, 15, 16				
		2	2, 6		51, 52, 54, 55, 56				
		2	3, 7		12, 15, 16				
17									HOSE, Auxiliary Heater
	05124886AA	1	2, 6		11, 12, 14, 15, 16				
		1	2, 6		51, 52, 54, 55, 56				
		1	3, 7		12, 15, 16				
18									BRACKET, Heater Core Tubes
	05133315AA	1	2, 6		01, 02, 06				
		1	2, 6		14, 15, 16, 11, 12				
		1	2, 6		51, 52, 54, 55, 56				
		1	3, 7		12, 15, 16				

SPRINTER (VA)

SERIES	LINE	BODY	ENGINE	TRANSMISSION
L = LOWLINE	3 = HD DODGE 2WD 6 = Lt. Duty DODGE 4WD 2 = Med. Duty DODGE 2WD 7 = Med. Duty DODGE 4WD	55 = Wagon 140" 54 = Wagon 118" 52 = Wagon 140" 51 = Wagon 118" 12 = Van 140" 11 = Van 118" 06 = Front Section 158" 14 = Van 118" 15 = Van 140" 16 = Van 158" 56 = Wagon 158" 01 = Chassis Forward Control 118" 02 = Chassis Forward Control 140"	EX8 = Engine-2.7L I5 Mercedes Turbo Diesel	DGJ = Transmission-5-Spd. Automatic,W5A580

Plumbing, Air Conditioning
Figure 24-270

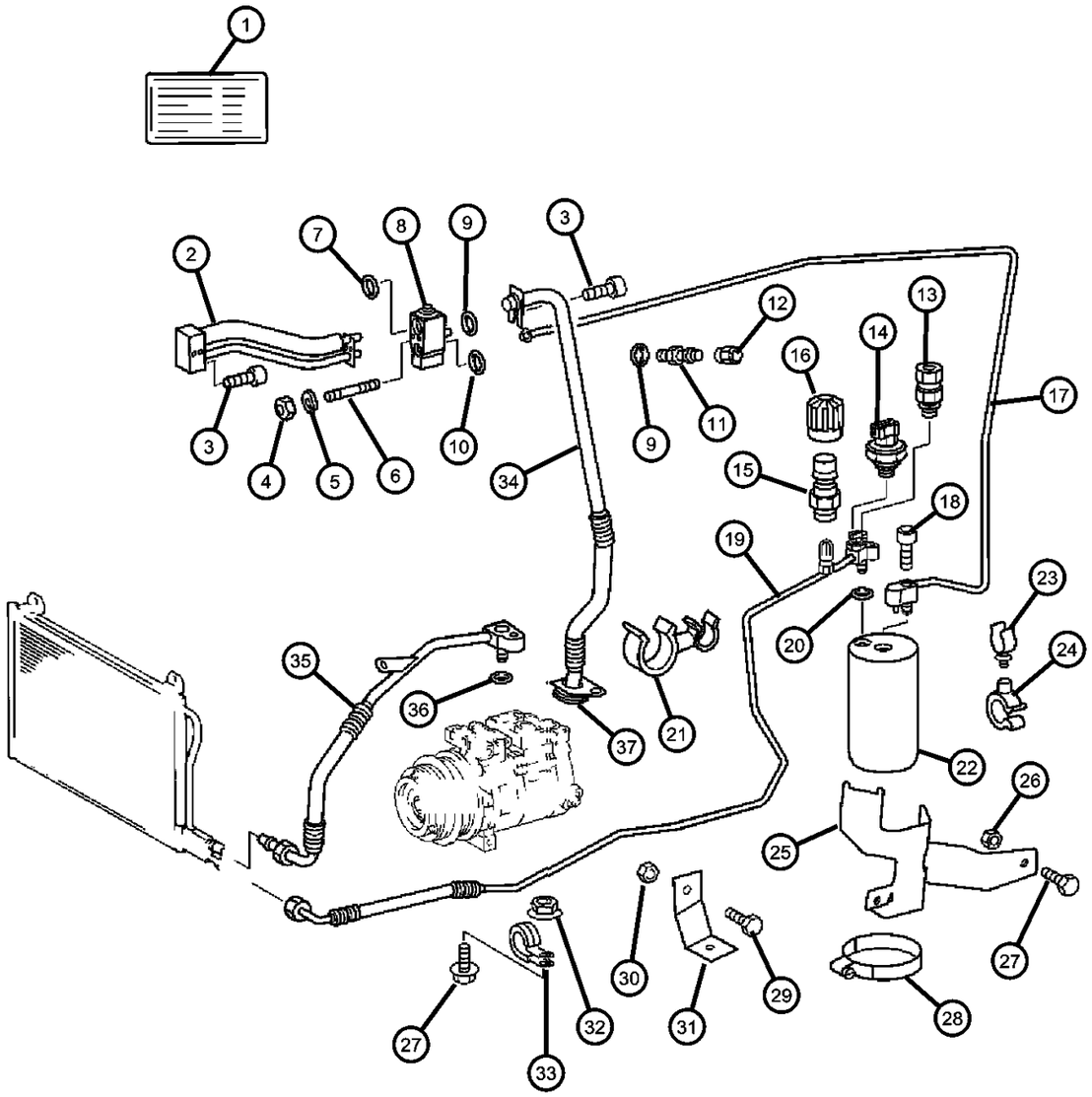

ITEM	PART NUMBER	QTY	LINE	SERIES	BODY	ENGINE	TRANS	TRIM	DESCRIPTION
1									LABEL, A/C Spec.
	05124359AA	1	2, 6		11, 12, 14, 15, 16				
		1	2, 6		51, 52, 54, 55, 56				
		1	3, 7		12, 15, 16				
2									LINE, A/C Suction And Liquid
	05104479AA	1	2, 6		01, 02, 06				
		1	2, 6		11, 12, 14, 15, 16				
		1	2, 6		51, 52, 54, 55, 56				
		1	3, 7		12, 15, 16				
3									SCREW
	05126135AA	2	2, 6		11, 12, 14, 15, 16				
		2	2, 6		51, 52, 54, 55, 56				
		2	3, 7		12, 15, 16				
4		2							NUT, (NOT SERVICED)
5									LOCK WASHER
	05126240AA	1	2, 6		11, 12, 14, 15, 16				
		1	2, 6		54, 55, 56, 51, 52				
		1	3, 7		12, 15, 16				
6									STUD, Expansion Valve
	05134028AA	1	2, 6		11, 12, 14, 15, 16				
		1	2, 6		51, 52, 54, 55, 56				
		1	3, 7		12, 15, 16				
7									O RING, A/C Line
	05098971AA	1	2, 6		11, 12, 14, 15, 16				

SPRINTER (VA)

SERIES	LINE	BODY	ENGINE	TRANSMISSION
L = LOWLINE	3 = HD DODGE 2WD 6 = Lt. Duty DODGE 4WD 2 = Med. Duty DODGE 2WD 7 = Med. Duty DODGE 4WD	55 = Wagon 140" 54 = Wagon 118" 52 = Wagon 140" 51 = Wagon 118" 12 = Van 140" 11 = Van 118" 06 = Front Section 158" 14 = Van 118" 15 = Van 140" 16 = Van 158" 56 = Wagon 158" 01 = Chassis Forward Control 118" 02 = Chassis Forward Control 140"	EX8 = Engine-2.7L I5 Mercedes Turbo Diesel	DGJ = Transmission-5-Spd. Automatic,W5A580

AR = use ase required - = Non illustrrated part

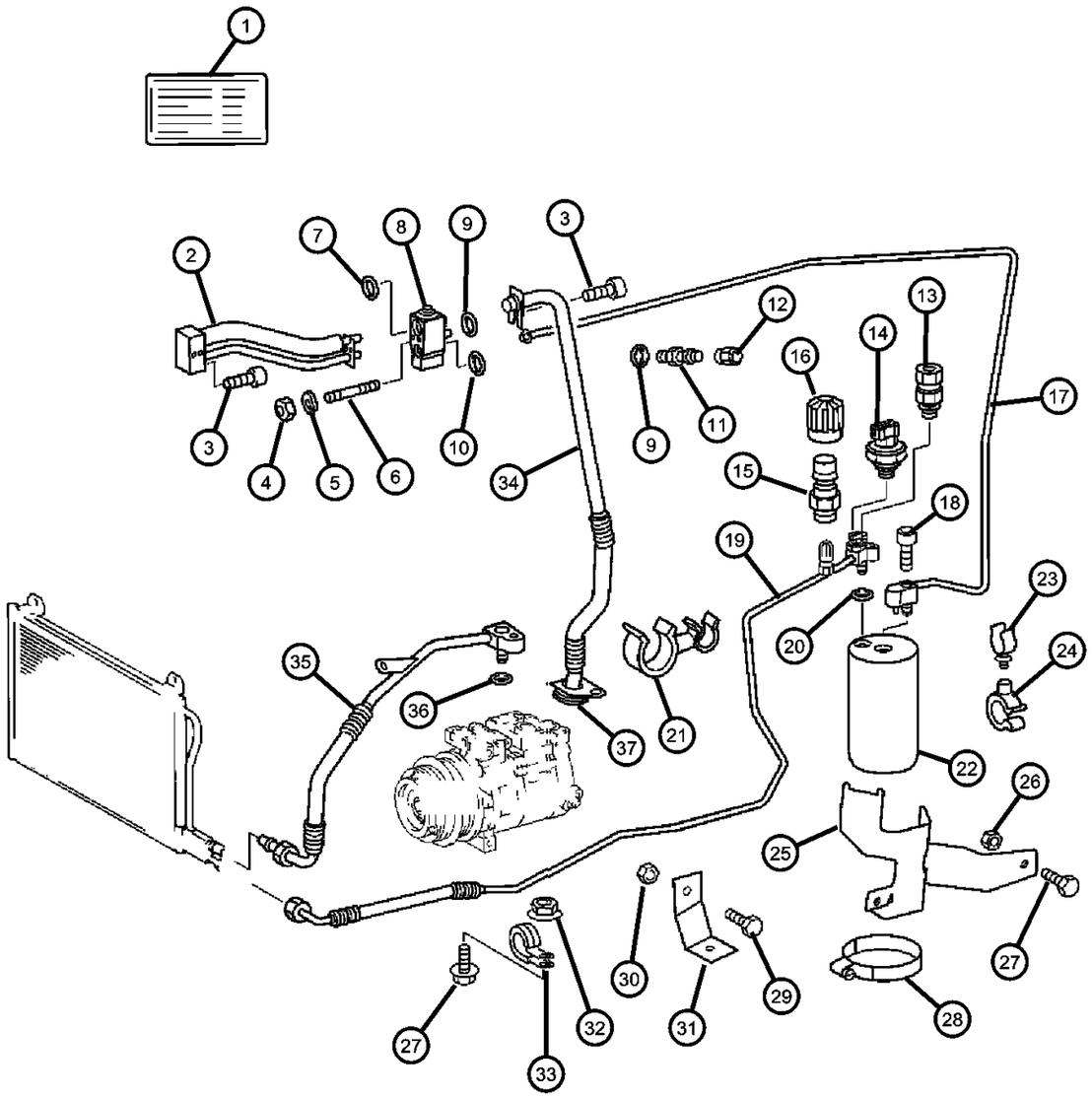

ITEM	PART NUMBER	QTY	LINE	SERIES	BODY	ENGINE	TRANS	TRIM	DESCRIPTION
		1	2, 6		51, 52, 54, 55, 56				
		1	3, 7		12, 15, 16				
8									VALVE, Expansion
	05103933AA	1	2, 6		11, 12, 14, 15, 16				
		1	2, 6		51, 52, 54, 55, 56				
		1	3, 7		12, 15, 16				
9									O RING, A/C Line
	05103930AA	2	2, 6		11, 12, 14, 15, 16				
		2	2, 6		51, 52, 54, 55, 56				
		2	3, 7		12, 15, 16				
10									O RING, A/C Line
	05098970AA	2	2, 6		11, 12, 14, 15, 16				
		2	2, 6		51, 52, 54, 55, 56				
		2	3, 7		12, 15, 16				
11									VALVE, Check
	05103771AA	1	2, 6		11, 12, 14, 15, 16				
		1	2, 6		51, 52, 54, 55, 56				
		1	3, 7		12, 15, 16				
12									CAP, Sealing
	05134029AA	1	2, 6		11, 12, 14, 15, 16				
		1	2, 6		51, 52, 54, 55, 56				
		1	3, 7		12, 15, 16				
13									VALVE, A/C Pressure Relief

SPRINTER (VA)

SERIES	LINE	BODY	ENGINE	TRANSMISSION
L = LOWLINE	3 = HD DODGE 2WD 6 = Lt. Duty DODGE 4WD 2 = Med. Duty DODGE 2WD 7 = Med. Duty DODGE 4WD	55 = Wagon 140" 54 = Wagon 118" 52 = Wagon 140" 51 = Wagon 118" 12 = Van 140" 11 = Van 118" 06 = Front Section 158" 14 = Van 118" 15 = Van 140" 16 = Van 158" 56 = Wagon 158" 01 = Chassis Forward Control 118" 02 = Chassis Forward Control 140"	EX8 = Engine-2.7L I5 Mercedes Turbo Diesel	DGJ = Transmission-5-Spd. Automatic,W5A580

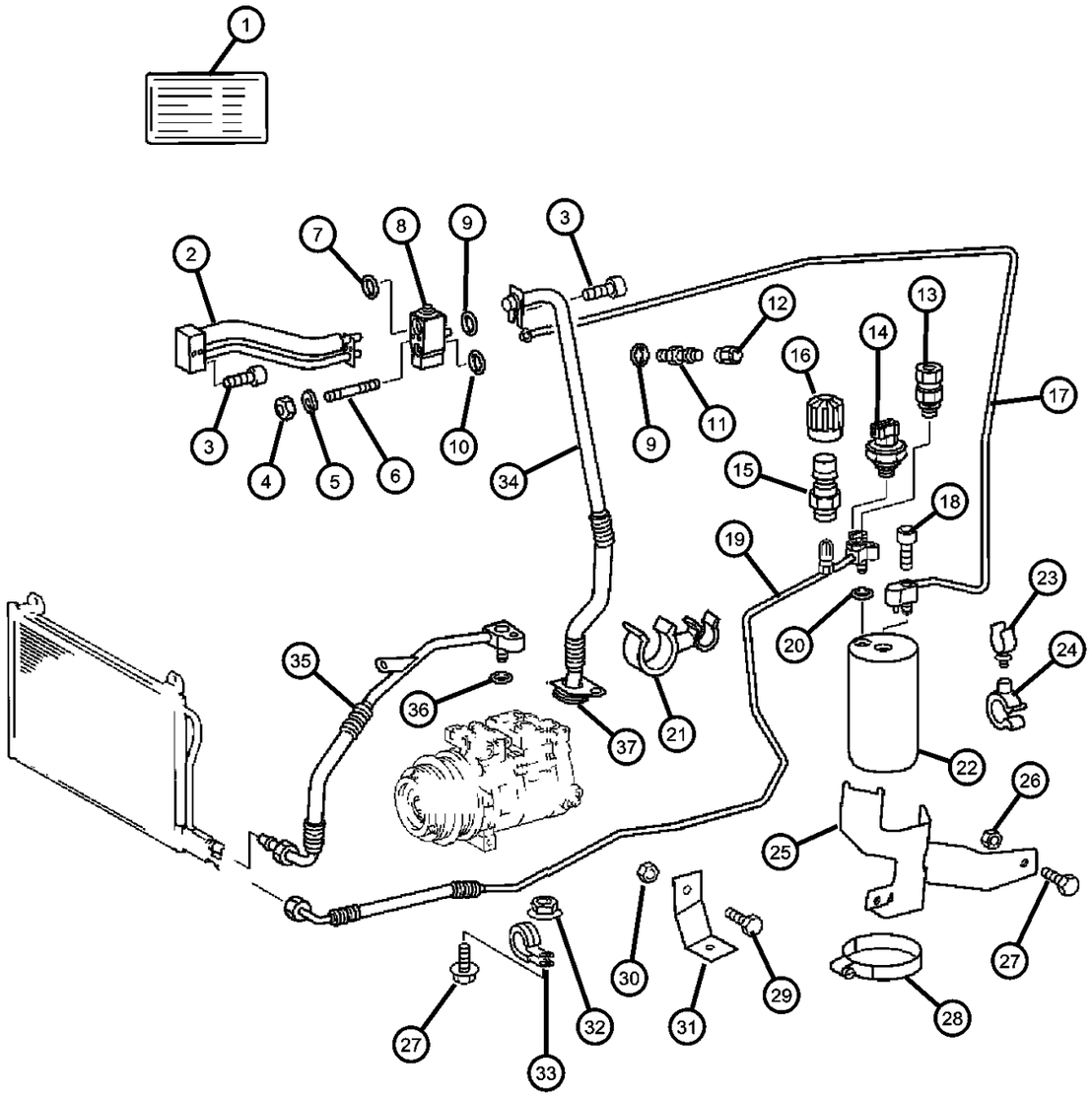

ITEM	PART NUMBER	QTY	LINE	SERIES	BODY	ENGINE	TRANS	TRIM	DESCRIPTION
	05098395AA	1	3, 7		12, 15, 16				
		1	2, 6		16, 11, 12, 14, 15				
		1	2, 6		51, 52, 54, 55, 56				
14									SWITCH, A/C Pressure
	05097873AA	1	2, 6		11, 12, 14, 15, 16				
		1	2, 6		51, 52, 54, 55, 56				
		1	3, 7		12, 15, 16				
15									VALVE, Charging
	05098396AB	1	2, 6		11, 12, 14, 15, 16				
		1	2, 6		51, 52, 54, 55, 56				
		1	3, 7		12, 15, 16				
16									CAP, A/C Charge Valve
	05098958AA	1	2, 6		11, 12, 14, 15, 16				
		1	2, 6		51, 52, 54, 55, 56				
		1	3, 7		12, 15, 16				
17									LINE, Receiver/Drier to Expansion Valve
	05124646AA	1	3, 7		12, 15, 16				
		1	2, 6		11, 12, 14, 15, 16				
		1	2, 6		51, 52, 54, 55, 56				
18									SCREW
	05126136AA	2	2, 6		11, 12, 14, 15, 16				
		2	2, 6		55, 56, 51, 52, 54				

SPRINTER (VA)

SERIES	LINE	BODY	ENGINE	TRANSMISSION
L = LOWLINE	3 = HD DODGE 2WD 6 = Lt. Duty DODGE 4WD 2 = Med. Duty DODGE 2WD 7 = Med. Duty DODGE 4WD	55 = Wagon 140" 54 = Wagon 118" 52 = Wagon 140" 51 = Wagon 118" 12 = Van 140" 11 = Van 118" 06 = Front Section 158" 14 = Van 118" 15 = Van 140" 16 = Van 158" 56 = Wagon 158" 01 = Chassis Forward Control 118" 02 = Chassis Forward Control 140"	EX8 = Engine-2.7L I5 Mercedes Turbo Diesel	DGJ = Transmission-5-Spd. Automatic,W5A580

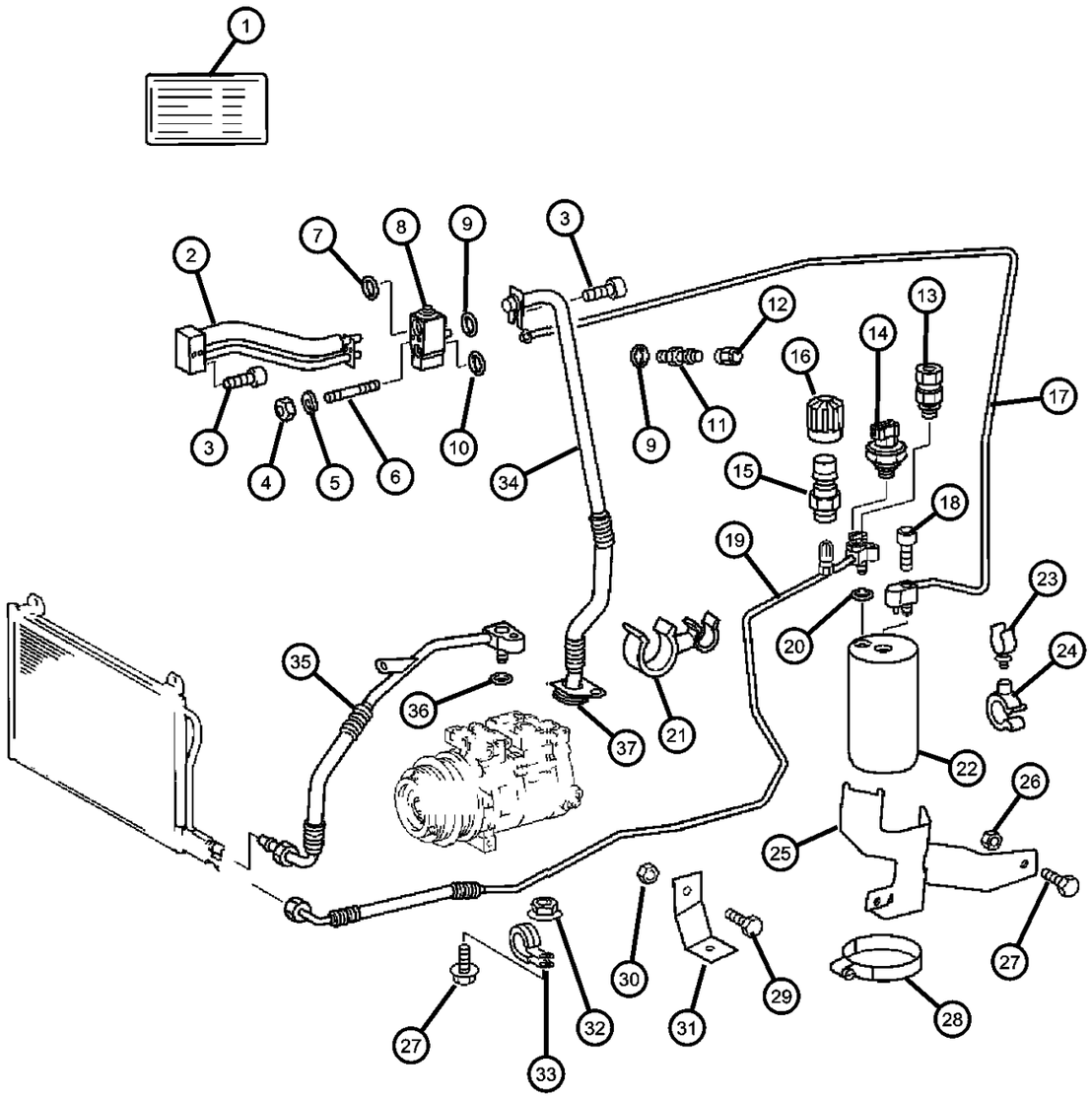

ITEM	PART NUMBER	QTY	LINE	SERIES	BODY	ENGINE	TRANS	TRIM	DESCRIPTION
		2	3, 7		12, 15, 16				
19									LINE, Condenser to Receiver/Drier
	05104484AA	1	2, 6		11, 12, 14, 15, 16				
		1	2, 6		51, 52, 54, 55, 56				
		1	3, 7		12, 15, 16				
20									O RING, Air Conditioning Line
	05103571AA	1	2, 6		11, 12, 14, 15, 16				
		1	2, 6		51, 52, 54, 55, 56				
		1	3, 7		12, 15, 16				
21									CLIP, Hose
	05124806AA	1	2, 6		01, 02, 06				
		1	2, 6		11, 12, 14, 15, 16				
		1	2, 6		51, 52, 54, 55, 56				
	05125881AA	1	3, 7		02, 06	EX9			
		1	3, 7		02, 06	EX8, EX9			
		1	3, 7		12, 15, 16	EX8, EX9			
22									RECEIVER DRIER
	05103570AA	1	2, 6		11, 12, 14, 15, 16				
		1	2, 6		51, 52, 54, 55, 56				
		1	3, 7		12, 15, 16				
23									CLIP, Retaining
	06104924AA	1	2, 6		11, 12, 14, 15, 16				
		1	2, 6		51, 52, 54, 55, 56				

SPRINTER (VA)

SERIES	LINE	BODY	ENGINE	TRANSMISSION
L = LOWLINE	3 = HD DODGE 2WD 6 = Lt. Duty DODGE 4WD 2 = Med. Duty DODGE 2WD 7 = Med. Duty DODGE 4WD	55 = Wagon 140" 54 = Wagon 118" 52 = Wagon 140" 51 = Wagon 118" 12 = Van 140" 11 = Van 118" 06 = Front Section 158" 14 = Van 118" 15 = Van 140" 16 = Van 158" 56 = Wagon 158" 01 = Chassis Forward Control 118" 02 = Chassis Forward Control 140"	EX8 = Engine-2.7L I5 Mercedes Turbo Diesel	DGJ = Transmission-5-Spd. Automatic,W5A580

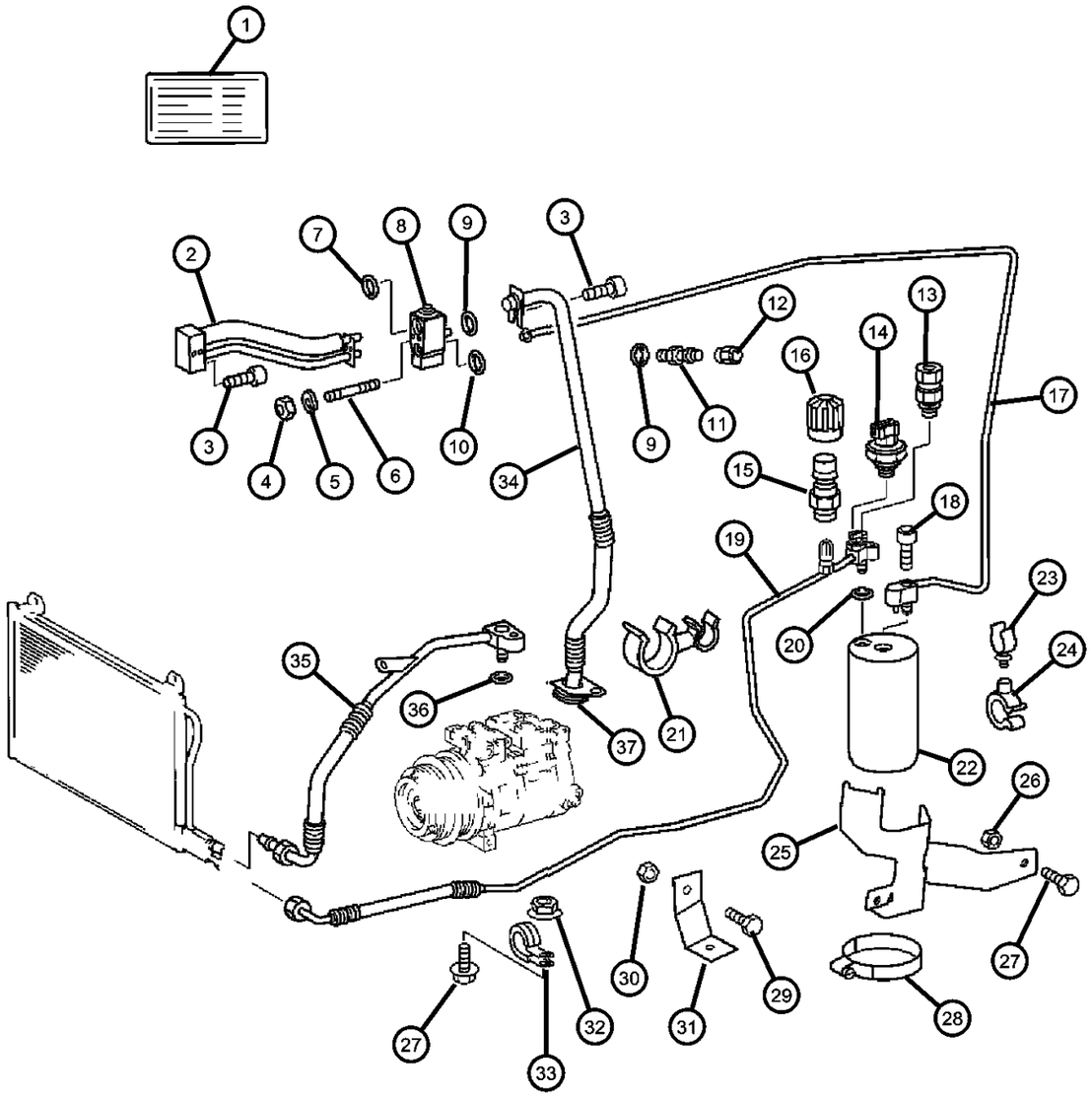

ITEM	PART NUMBER	QTY	LINE	SERIES	BODY	ENGINE	TRANS	TRIM	DESCRIPTION
		1	3, 7		12, 15, 16				
24									CLAMP, HOSE CLAMP
	05133495AA	1	3, 7		12, 15, 16				
		1	2, 6		11, 12, 14, 15, 16				
		1	2, 6		51, 52, 54, 55, 56				
25									BRACKET, Recirculating Pump
	05124810AA	1	2, 6		11, 12, 14, 15, 16				
		1	2, 6		51, 52, 54, 55, 56				
		1	3, 7		12, 15, 16				
26									NUT, Hex, M6
	05096978AA	2	2, 6		56, 51, 52, 54, 55				
		2	2, 6		11, 12, 14, 15, 16				
		2	3, 7		12, 15, 16				
27	06104005AA	2							SCREW
28									CLAMP
	06104787AA	1	2, 6		11, 12, 14, 15, 16				
		1	2, 6		51, 52, 54, 55, 56				
	06104791AA	1	3, 7		12, 15, 16				
29									NUT, Hex, M6
	05127449AA	1	2, 6		01, 02, 06				
		1	2, 6		11, 12, 14, 15, 16				
		1	2, 6		51, 52, 54, 55, 56				
		2	3, 7		12, 15, 16				

SPRINTER (VA)

SERIES	LINE	BODY	ENGINE	TRANSMISSION
L = LOWLINE	3 = HD DODGE 2WD 6 = Lt. Duty DODGE 4WD 2 = Med. Duty DODGE 2WD 7 = Med. Duty DODGE 4WD	55 = Wagon 140" 54 = Wagon 118" 52 = Wagon 140" 51 = Wagon 118" 12 = Van 140" 11 = Van 118" 06 = Front Section 158" 14 = Van 118" 15 = Van 140" 16 = Van 158" 56 = Wagon 158" 01 = Chassis Forward Control 118" 02 = Chassis Forward Control 140"	EX8 = Engine-2.7L I5 Mercedes Turbo Diesel	DGJ = Transmission-5-Spd. Automatic,W5A580

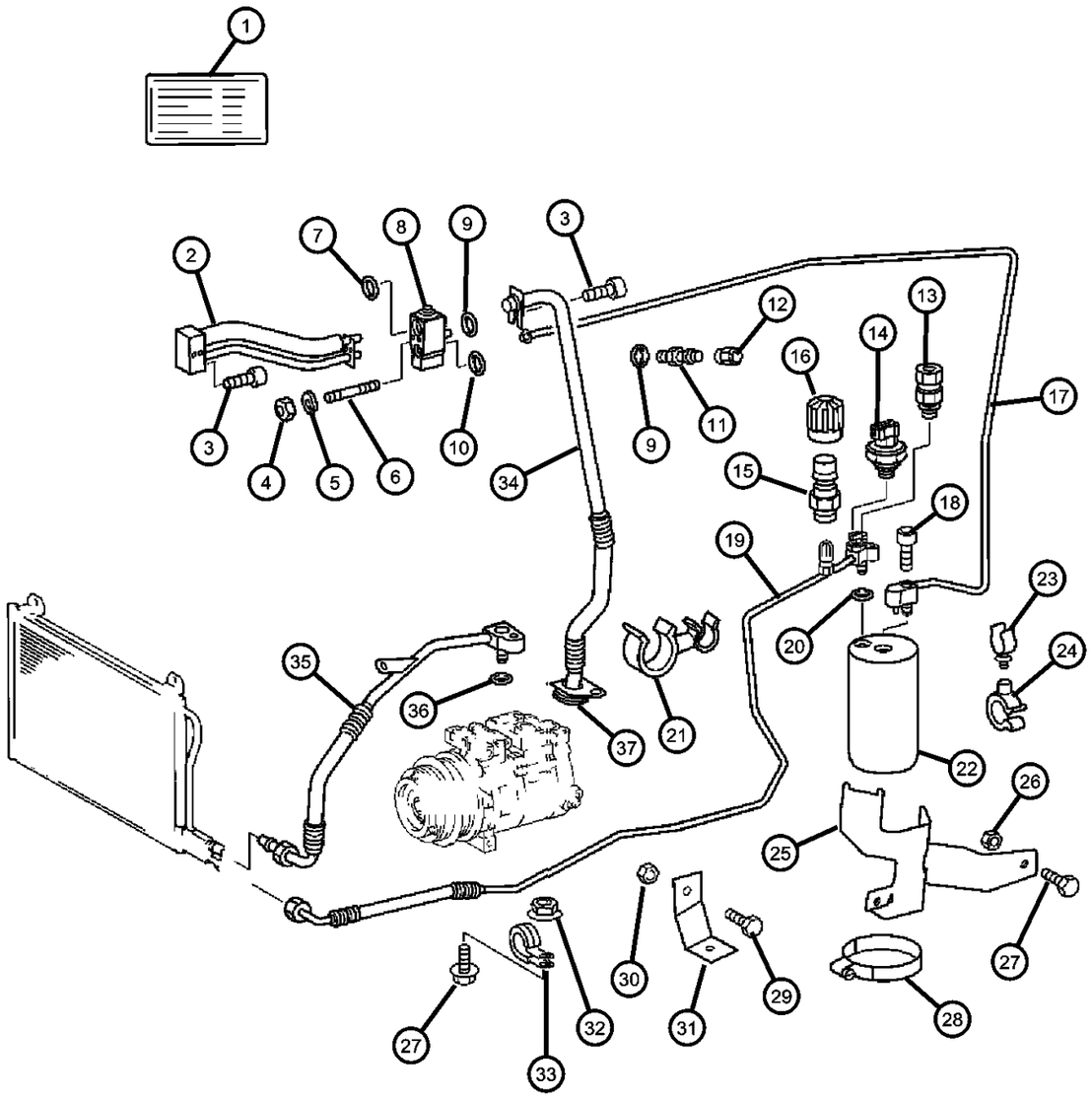

ITEM	PART NUMBER	QTY	LINE	SERIES	BODY	ENGINE	TRANS	TRIM	DESCRIPTION
30									NUT
	06104725AA	1	2, 6		11, 12, 14, 15, 16				
		1	3, 7		12, 15, 16				
		1	2, 6		51, 52, 54, 55, 56				
31		1							BRACKET, (NOT SERVICED)
32									NUT, Hex, M6
	05096978AA	1	2, 6		51, 52, 54, 55, 56				
		1	3, 7		12, 15, 16				
		1	2, 6		11, 12, 14, 15, 16				
33									CLAMP, Air Conditioning Piping
	05126284AA	1	2, 6		11, 12, 14, 15, 16				
		1	2, 6		51, 52, 54, 55, 56				
		1	3, 7		12, 15, 16				
34									LINE, Expansion Valve to Compressor
	05124647AA	1	2, 6		01, 02, 06	EX8, EX9			
		1	2, 6		11, 12, 14, 15, 16	EX8, EX9			
		1	2, 6		51, 52, 54, 55, 56	EX8, EX9			
		1	3, 7		02, 06	EX8, EX9			
		1	3, 7		12, 15, 16	EX8, EX9			
35									LINE, A/C Compressor
	05124817AA	1	3, 7		12, 15, 16	EX9			
		1	2, 6		11, 12, 14, 15, 16				
		1	2, 6		51, 52, 54, 55, 56				

SPRINTER (VA)

SERIES	LINE	BODY	ENGINE	TRANSMISSION
L = LOWLINE	3 = HD DODGE 2WD 6 = Lt. Duty DODGE 4WD 2 = Med. Duty DODGE 2WD 7 = Med. Duty DODGE 4WD	55 = Wagon 140" 54 = Wagon 118" 52 = Wagon 140" 51 = Wagon 118" 12 = Van 140" 11 = Van 118" 06 = Front Section 158" 14 = Van 118" 15 = Van 140" 16 = Van 158" 56 = Wagon 158" 01 = Chassis Forward Control 118" 02 = Chassis Forward Control 140"	EX8 = Engine-2.7L I5 Mercedes Turbo Diesel	DGJ = Transmission-5-Spd. Automatic,W5A580

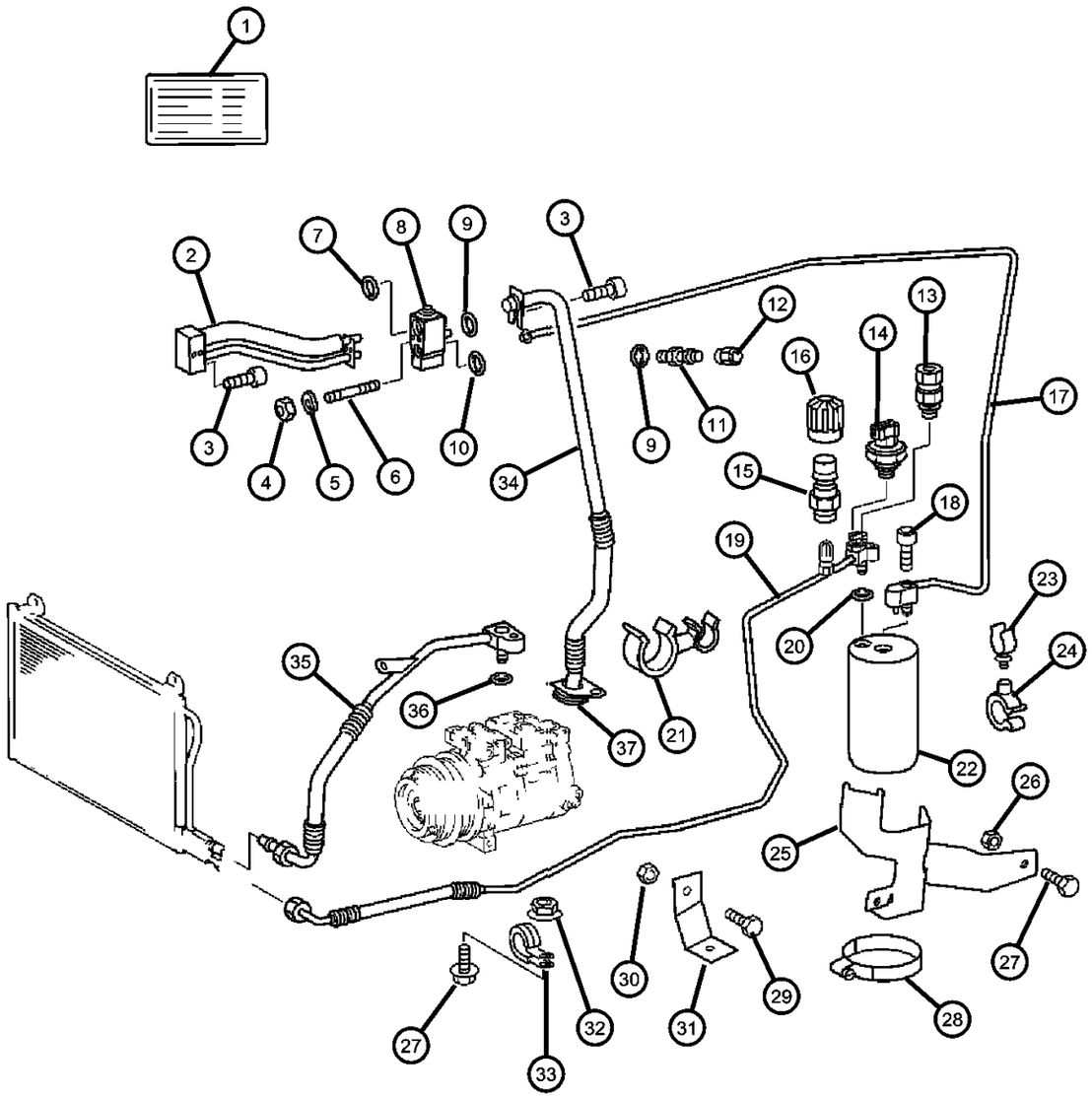

ITEM	PART NUMBER	QTY	LINE	SERIES	BODY	ENGINE	TRANS	TRIM	DESCRIPTION
		1	3, 7		02, 06	EX8, EX9			
		1	3, 7		12, 15, 16	EX8, EX9			
		1	3, 7		02, 06	EX9			
36									O RING, A/C Line
	05098972AA	1	2, 6		51, 52, 54, 55, 56				
		1	3, 7		12, 15, 16				
		1	2, 6		14, 15, 16, 11, 12				
37									SEAL, O-Ring
	05134027AA	1	3, 7		12, 15, 16				
		1	2, 6		11, 12, 14, 15, 16				
		1	2, 6		51, 52, 54, 55, 56				

SPRINTER (VA)

SERIES	LINE	BODY	ENGINE	TRANSMISSION
L = LOWLINE	3 = HD DODGE 2WD 6 = Lt. Duty DODGE 4WD 2 = Med. Duty DODGE 2WD 7 = Med. Duty DODGE 4WD	55 = Wagon 140" 54 = Wagon 118" 52 = Wagon 140" 51 = Wagon 118" 12 = Van 140" 11 = Van 118" 06 = Front Section 158" 14 = Van 118" 15 = Van 140" 16 = Van 158" 56 = Wagon 158" 01 = Chassis Forward Control 118" 02 = Chassis Forward Control 140"	EX8 = Engine-2.7L I5 Mercedes Turbo Diesel	DGJ = Transmission-5-Spd. Automatic,W5A580

Condenser, Fan Front
Figure 24-280

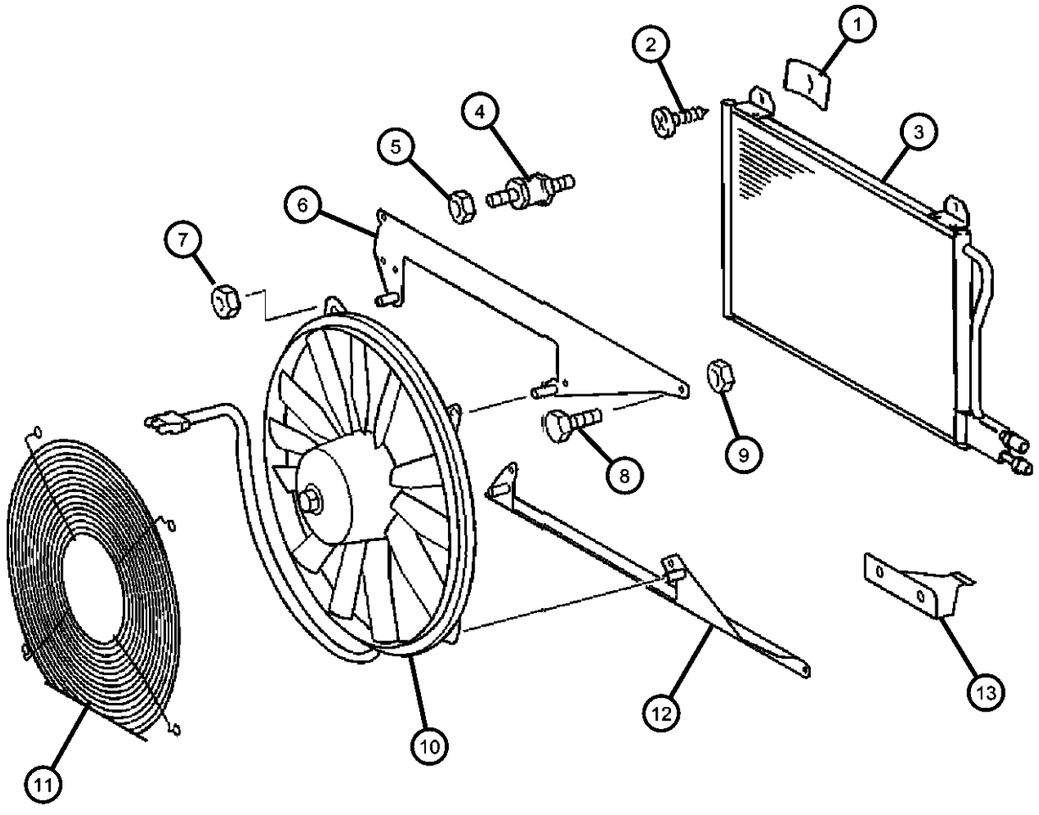

ITEM	PART NUMBER	QTY	LINE	SERIES	BODY	ENGINE	TRANS	TRIM	DESCRIPTION
1									CLIP
	05103735AA	4	2, 6		11, 12, 14, 15, 16				
		4	2, 6		51, 52, 54, 55, 56				
		4	3, 7		12, 15, 16				
2									SCREW, Tapping
	06104574AA	4	2, 6		11, 12, 14, 15, 16				
		4	2, 6		51, 52, 54, 55, 56				
		4	3, 7		12, 15, 16				
3									CONDENSER, A/C
	05104114AA	1	2, 6		11, 12, 14, 15, 16				[HAB]
		1	2, 6		51, 52, 54, 55, 56				[HAB]
		1	3, 7		12, 15, 16				[HAB]
	05132357AA	1	2, 6		51, 52, 54, 55, 56				HIGH PERFORMANCE FOR PASS COMP
4									STUD, Cooling Fan
	05104031AA	2	2, 6		11, 12, 14, 15, 16				
		2	2, 6		51, 52, 54, 55, 56				
		2	3, 7		12, 15, 16				
5									NUT
	05104675AA	2	2, 6		11, 12, 14, 15, 16				
		2	2, 6		51, 52, 54, 55, 56				
		2	3, 7		12, 15, 16				
6									BRACKET, Fan
	05119989AA	1	2, 6		11, 12, 14, 15, 16				

SPRINTER (VA)

SERIES	LINE	BODY	ENGINE	TRANSMISSION
L = LOWLINE	3 = HD DODGE 2WD 6 = Lt. Duty DODGE 4WD 2 = Med. Duty DODGE 2WD 7 = Med. Duty DODGE 4WD	55 = Wagon 140" 54 = Wagon 118" 52 = Wagon 140" 51 = Wagon 118" 12 = Van 140" 11 = Van 118" 06 = Front Section 158" 14 = Van 118" 15 = Van 140" 16 = Van 158" 56 = Wagon 158" 01 = Chassis Forward Control 118" 02 = Chassis Forward Control 140"	EX8 = Engine-2.7L I5 Mercedes Turbo Diesel	DGJ = Transmission-5-Spd. Automatic,W5A580

Condenser, Fan Front
Figure 24-280

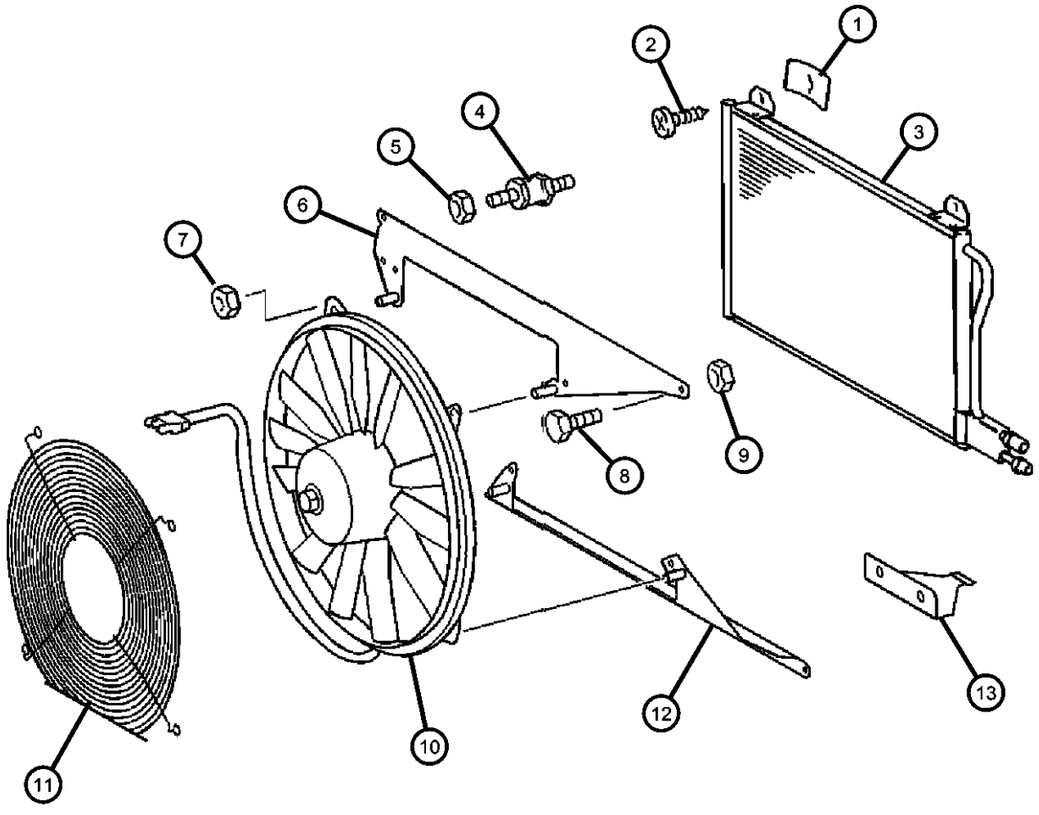

ITEM	PART NUMBER	QTY	LINE	SERIES	BODY	ENGINE	TRANS	TRIM	DESCRIPTION
		1	2, 6		51, 52, 54, 55, 56				
		1	3, 7		12, 15, 16				
7									NUT
	06104715AA	4	2, 6		11, 12, 14, 15, 16				
		4	2, 6		51, 52, 54, 55, 56				
		4	3, 7		12, 15, 16				
8									SCREW
	06104005AA	2	2, 6		01, 02, 06				
		2	2, 6		11, 12, 14, 15, 16				
		2	2, 6		51, 52, 54, 55, 56				
		2	3, 7		02, 06				
		2	3, 7		12, 15, 16				
9									NUT
	06104715AA	2	2, 6		11, 12, 14, 15, 16				
		2	2, 6		51, 52, 54, 55, 56				
		2	3, 7		12, 15, 16				
10									FAN, Condenser
	05103653AA	1	2, 6		11, 12, 14, 15, 16				
		1	2, 6		51, 52, 54, 55, 56				
		1	3, 7		12, 15, 16				
11									GRILLE, Air Inlet
	05104121AA	1	2, 6		11, 12, 14, 15, 16				
		1	2, 6		51, 52, 54, 55, 56				

SPRINTER (VA)

SERIES	LINE	BODY	ENGINE	TRANSMISSION
L = LOWLINE	3 = HD DODGE 2WD 6 = Lt. Duty DODGE 4WD 2 = Med. Duty DODGE 2WD 7 = Med. Duty DODGE 4WD	55 = Wagon 140" 54 = Wagon 118" 52 = Wagon 140" 51 = Wagon 118" 12 = Van 140" 11 = Van 118" 06 = Front Section 158" 14 = Van 118" 15 = Van 140" 16 = Van 158" 56 = Wagon 158" 01 = Chassis Forward Control 118" 02 = Chassis Forward Control 140"	EX8 = Engine-2.7L I5 Mercedes Turbo Diesel	DGJ = Transmission-5-Spd. Automatic,W5A580

Condenser, Fan Front
Figure 24-280

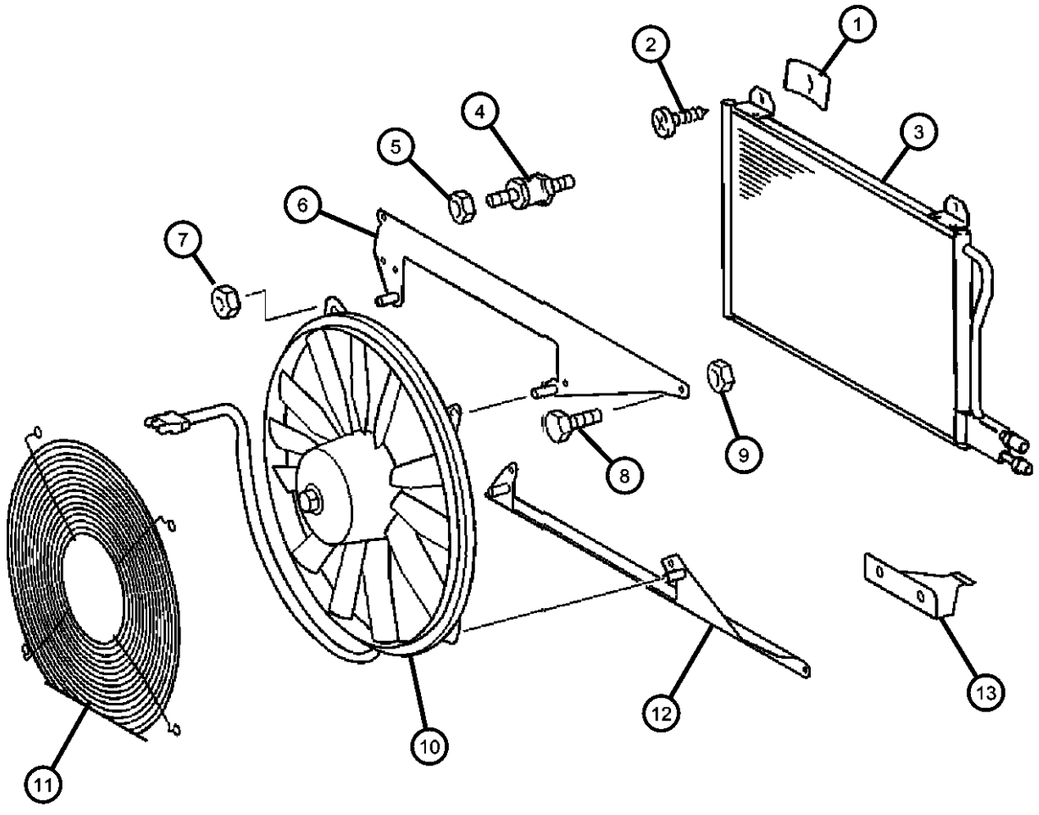

ITEM	PART NUMBER	QTY	LINE	SERIES	BODY	ENGINE	TRANS	TRIM	DESCRIPTION
		1	3, 7		12, 15, 16				
12									BRACKET, Fan
	05104113AA	1	2, 6		11, 12, 14, 15, 16				
		1	2, 6		51, 52, 54, 55, 56				
		1	3, 7		12, 15, 16				
13									BRACKET
	05120001AA	1	2, 6		11, 12, 14, 15, 16				
		1	2, 6		51, 52, 54, 55, 56				
		1	3, 7		12, 15, 16				

SPRINTER (VA)

SERIES	LINE	BODY	ENGINE	TRANSMISSION
L = LOWLINE	3 = HD DODGE 2WD 6 = Lt. Duty DODGE 4WD 2 = Med. Duty DODGE 2WD 7 = Med. Duty DODGE 4WD	55 = Wagon 140" 54 = Wagon 118" 52 = Wagon 140" 51 = Wagon 118" 12 = Van 140" 11 = Van 118" 06 = Front Section 158" 14 = Van 118" 15 = Van 140" 16 = Van 158" 56 = Wagon 158" 01 = Chassis Forward Control 118" 02 = Chassis Forward Control 140"	EX8 = Engine-2.7L I5 Mercedes Turbo Diesel	DGJ = Transmission-5-Spd. Automatic,W5A580

AR = use ase required - = Non illustrrated part

Condenser, Fan Roof
Figure 24-285

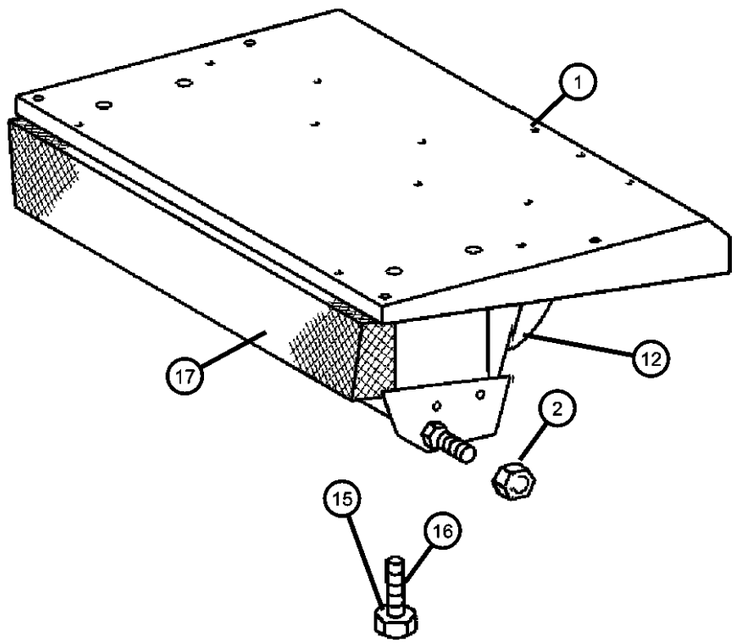

ITEM	PART NUMBER	QTY	LINE	SERIES	BODY	ENGINE	TRANS	TRIM	DESCRIPTION
1									EVAPORATOR, Air Conditioning
	05104473AA	1	2, 6		11, 12, 14, 15, 16				
		1	2, 6		51, 52, 54, 55, 56				
2	05133459AA	1	2, 6		51, 52, 54, 55, 56				EVAPORATOR, Air Conditioning
-3									TUBE, Auxilary A/C and Heater
	05132374AA	2	2, 6		11, 12, 14, 15, 16				
		2	2, 6		51, 52, 54, 55, 56				
-4									LINE, Auxiliary A/C Liquid
	05132223AA	1	2, 6		16				
		1	2, 6		56				
-5	05132225AA	1	2, 6		52, 55				LINE, Auxiliary A/C Liquid
-6									LINE, Auxiliary A/C Liquid
	05132237AA	1	2, 6		11, 12, 14, 15, 16				
		1	2, 6		51, 52, 54, 55, 56				
-7									LINE, Auxiliary A/C Suction
	05132230AA	1	2, 6		16				
		1	2, 6		56				
-8									LINE, Auxiliary A/C Suction
	05127838AA	1	2, 6		11, 12, 14, 15, 16				
		1	2, 6		51, 52, 54, 55, 56				
-9	05133464AA	1	2, 6		51, 52, 54, 55, 56				VALVE
-10	05103546AA	1	2, 6		51, 52, 54, 55, 56				FILTER, A/C and Heater Unit
-11	05133452AA	1	2, 6		51, 52, 54, 55, 56				GRILLE, A/C And Heater

SPRINTER (VA)

SERIES	LINE	BODY	ENGINE	TRANSMISSION
L = LOWLINE	3 = HD DODGE 2WD 6 = Lt. Duty DODGE 4WD 2 = Med. Duty DODGE 2WD 7 = Med. Duty DODGE 4WD	55 = Wagon 140" 54 = Wagon 118" 52 = Wagon 140" 51 = Wagon 118" 12 = Van 140" 11 = Van 118" 06 = Front Section 158" 14 = Van 118" 15 = Van 140" 16 = Van 158" 56 = Wagon 158" 01 = Chassis Forward Control 118" 02 = Chassis Forward Control 140"	EX8 = Engine-2.7L I5 Mercedes Turbo Diesel	DGJ = Transmission-5-Spd. Automatic,W5A580

Condenser, Fan Roof
Figure 24-285

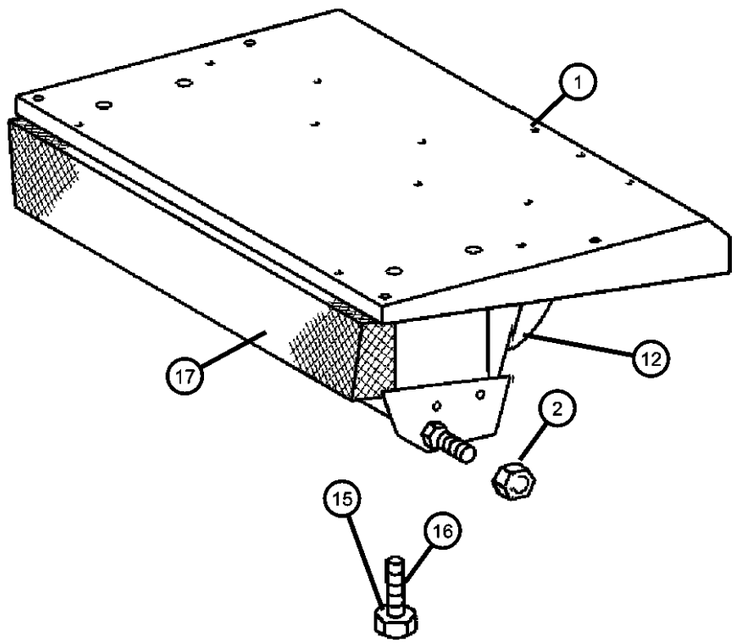

ITEM	PART NUMBER	QTY	LINE	SERIES	BODY	ENGINE	TRANS	TRIM	DESCRIPTION
12	05133460AA	1	2, 6		51, 52, 54, 55, 56				MOTOR, Blower
-13	05133456AA	6	2, 6		51, 52, 54, 55, 56				RING
-14	05133465AA	1	2, 6		51, 52, 54, 55, 56				MAGNET
15	05133455AA	6	2, 6		51, 52, 54, 55, 56				WASHER
16	05133455AA	6							SCREW, (NOT SERVICED)
17									CONDENSER, A/C
	05132357AA	1	2, 6		11, 12, 14, 15, 16				
		1	3, 7		12, 15, 16				
		1	2, 6		51, 52, 54, 55, 56				
-18									COVER
	05132358AA	1	2, 6		11, 12, 14, 15, 16				Plastic Cover for Roof Unit
		1	3, 7		12, 15, 16				Plastic Cover for Roof Unit
		1	2, 6		51, 52, 54, 55, 56				Plastic Cover for Roof Unit

SPRINTER (VA)

SERIES	LINE	BODY	ENGINE	TRANSMISSION
L = LOWLINE	3 = HD DODGE 2WD 6 = Lt. Duty DODGE 4WD 2 = Med. Duty DODGE 2WD 7 = Med. Duty DODGE 4WD	55 = Wagon 140" 54 = Wagon 118" 52 = Wagon 140" 51 = Wagon 118" 12 = Van 140" 11 = Van 118" 06 = Front Section 158" 14 = Van 118" 15 = Van 140" 16 = Van 158" 56 = Wagon 158" 01 = Chassis Forward Control 118" 02 = Chassis Forward Control 140"	EX8 = Engine-2.7L I5 Mercedes Turbo Diesel	DGJ = Transmission-5-Spd. Automatic,W5A580

Auxiliary Warm Water Heater
Figure 24-290

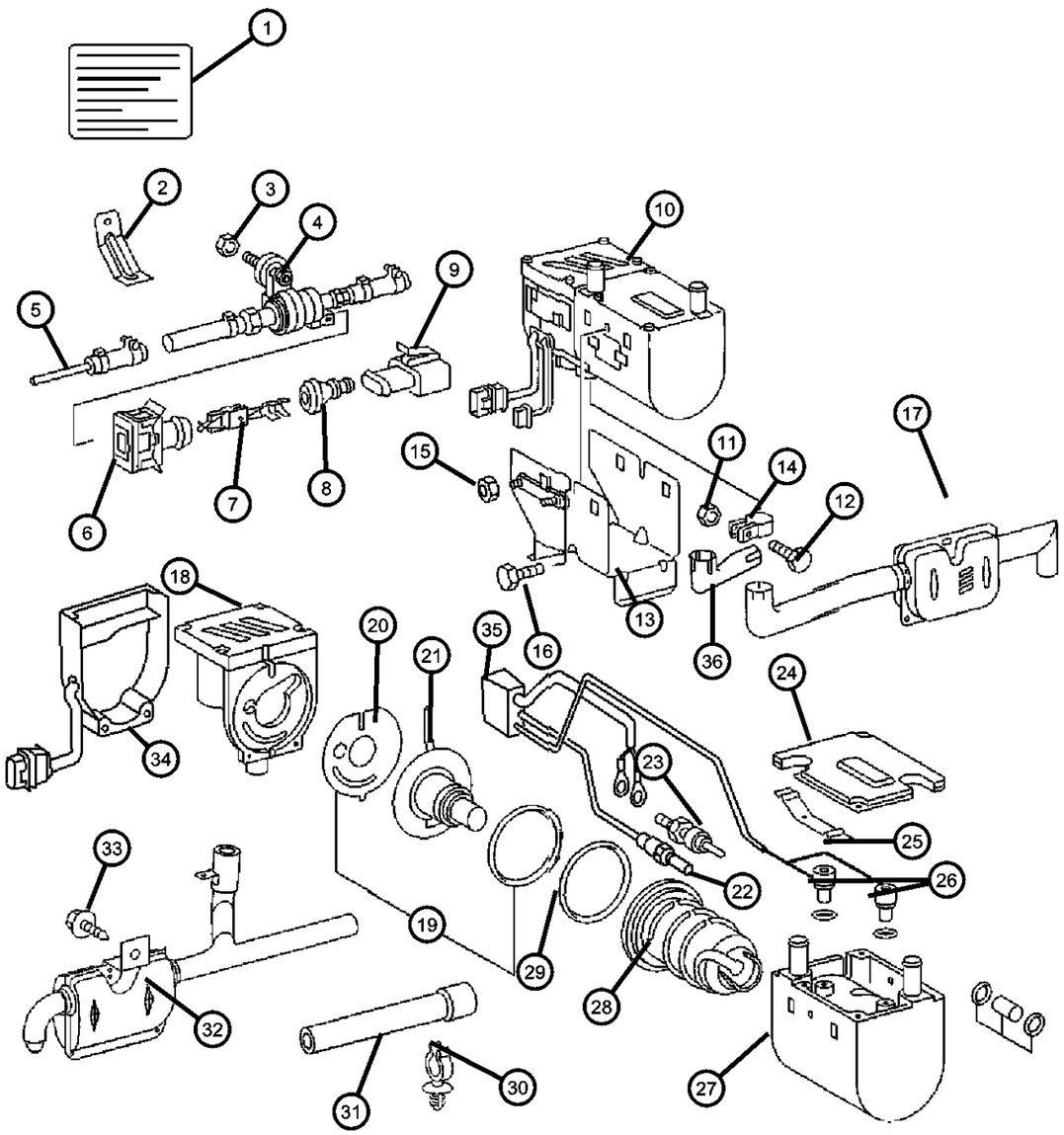

ITEM	PART NUMBER	QTY	LINE	SERIES	BODY	ENGINE	TRANS	TRIM	DESCRIPTION
1									LABEL, Fuel
	05104152AA	1	2, 6		01, 02, 06				
		1	2, 6		12, 14, 15, 16, 11				
		1	2, 6		51, 52, 54, 55, 56				
		1	3, 7		12, 15, 16				
2									BRACKET
	05119706AA	1	2, 6		11, 12, 14, 15, 16	EX8, EX9			
		1	2, 6		51, 52, 54, 55, 56	EX8, EX9			
		1	3, 7		02, 06	EX8, EX9			
		1	3, 7		02, 06	EX9			
		1	2, 6		01, 02, 06	EX8, EX9			
		1	3, 7		12, 15, 16	EX8, EX9			
3									NUT, Hex, M6
	05096978AA	1	2, 6		51, 52, 54, 55, 56				
		3	3, 7		02, 06				
		1	2, 6		01, 02, 06				
		1	2, 6		11, 12, 14, 15, 16				
		1	3, 7		12, 15, 16				
4									PUMP, Water
	05124900AA	1	3, 7		12, 15, 16				
		1	2, 6		02, 06, 01				
		1	2, 6		11, 12, 14, 15, 16				
		1	2, 6		51, 52, 54, 55, 56				
5									LINE, Heater
	05124631AA	1	2, 6		01, 02, 06				

SPRINTER (VA)

SERIES	LINE	BODY	ENGINE	TRANSMISSION
L = LOWLINE	3 = HD DODGE 2WD 6 = Lt. Duty DODGE 4WD 2 = Med. Duty DODGE 2WD 7 = Med. Duty DODGE 4WD	55 = Wagon 140" 54 = Wagon 118" 52 = Wagon 140" 51 = Wagon 118" 12 = Van 140" 11 = Van 118" 06 = Front Section 158" 14 = Van 118" 15 = Van 140" 16 = Van 158" 56 = Wagon 158" 01 = Chassis Forward Control 118" 02 = Chassis Forward Control 140"	EX8 = Engine-2.7L I5 Mercedes Turbo Diesel	DGJ = Transmission-5-Spd. Automatic,W5A580

Auxiliary Warm Water Heater
Figure 24-290

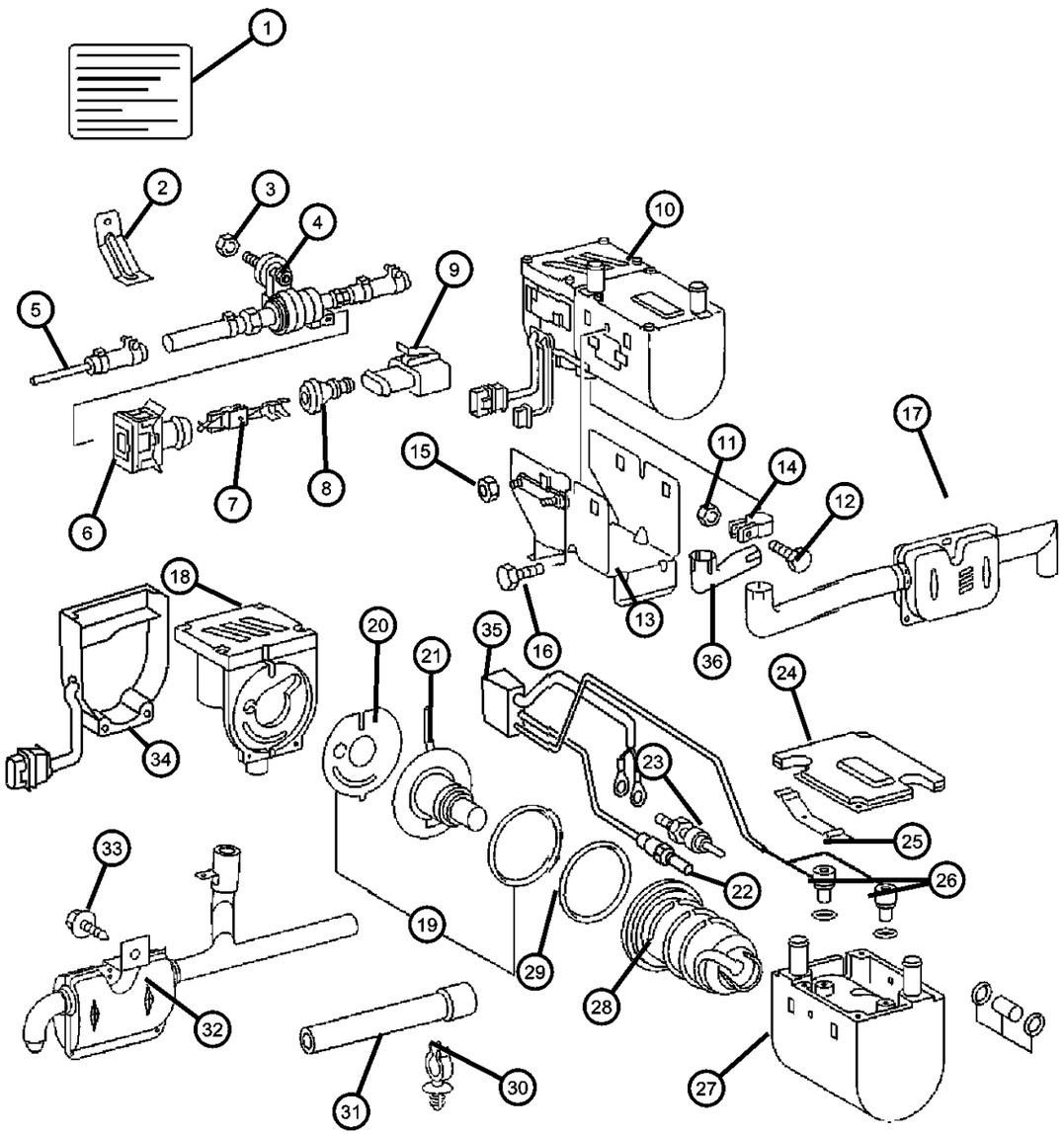

ITEM	PART NUMBER	QTY	LINE	SERIES	BODY	ENGINE	TRANS	TRIM	DESCRIPTION
		1	2, 6		11, 12, 14, 15, 16				
		1	2, 6		51, 52, 54, 55, 56				
		1	3, 7		12, 15, 16				
6									CONNECTOR
	05120749AA	1	2, 6		51, 52, 54, 55, 56				
		1	2, 6		01, 02, 06				
		1	2, 6		11, 12, 14, 15, 16				
		1	3, 7		12, 15, 16				
7									TERMINAL
	05103880AA	99	2, 6		51, 52, 54, 55, 56				
		99	2, 6		01, 02, 06				
		99	2, 6		11, 12, 14, 15, 16				
		99	3, 7		12, 15, 16				
8									BOOT
	05120881AA	1	2, 6		01, 02, 06				
		1	2, 6		11, 12, 14, 15, 16				
		1	2, 6		55, 56, 51, 52, 54				
		1	3, 7		12, 15, 16				
9									CONNECTOR
	05133296AA	1	2, 6		01, 02, 06				
		1	2, 6		11, 12, 14, 15, 16				
		1	2, 6		51, 52, 54, 55, 56				
		1	3, 7		12, 15, 16				

SPRINTER (VA)

SERIES	LINE	BODY	ENGINE	TRANSMISSION
L = LOWLINE	3 = HD DODGE 2WD 6 = Lt. Duty DODGE 4WD 2 = Med. Duty DODGE 2WD 7 = Med. Duty DODGE 4WD	55 = Wagon 140" 54 = Wagon 118" 52 = Wagon 140" 51 = Wagon 118" 12 = Van 140" 11 = Van 118" 06 = Front Section 158" 14 = Van 118" 15 = Van 140" 16 = Van 158" 56 = Wagon 158" 01 = Chassis Forward Control 118" 02 = Chassis Forward Control 140"	EX8 = Engine-2.7L I5 Mercedes Turbo Diesel	DGJ = Transmission-5-Spd. Automatic,W5A580

Auxiliary Warm Water Heater
Figure 24-290

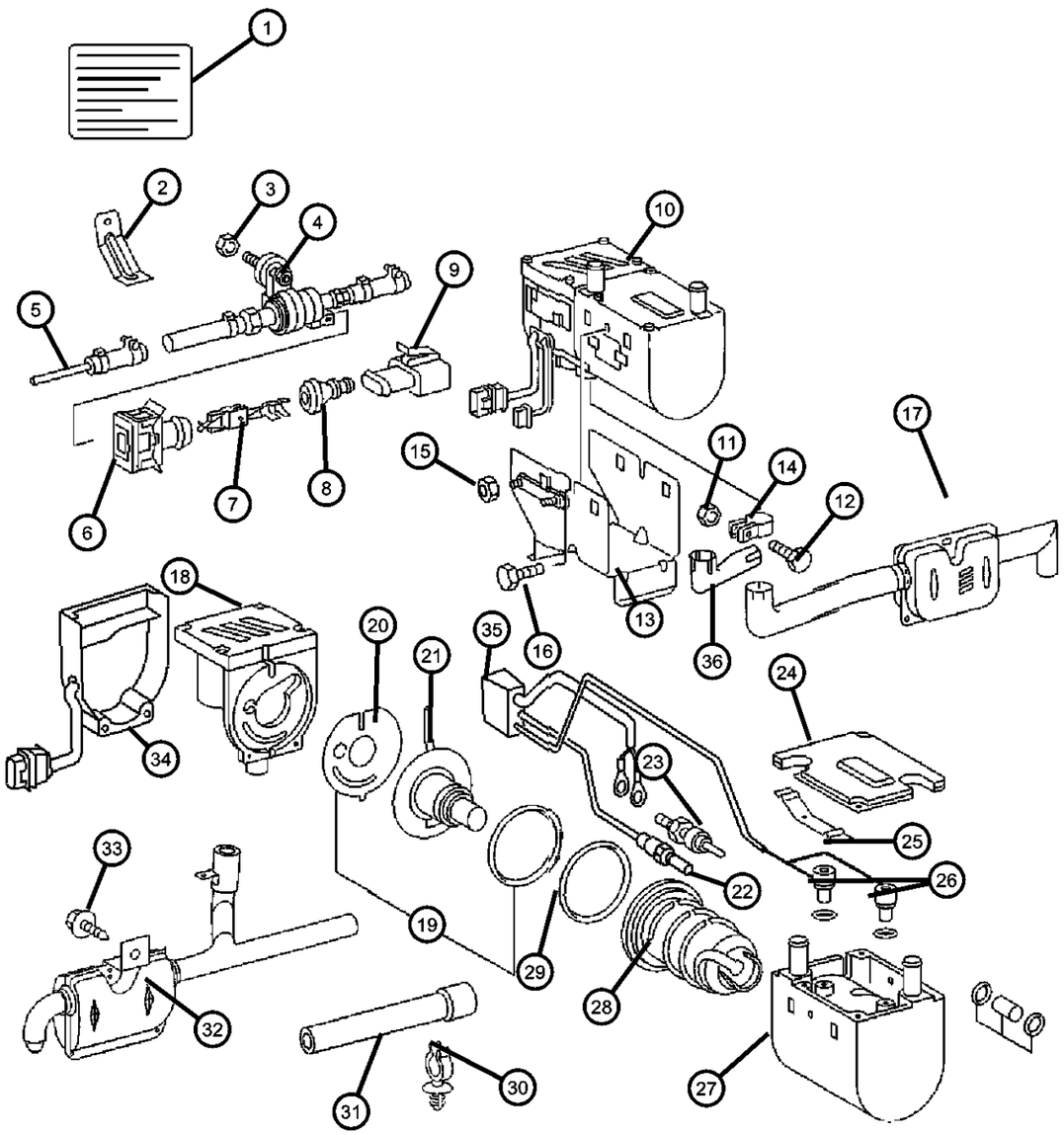

ITEM	PART NUMBER	QTY	LINE	SERIES	BODY	ENGINE	TRANS	TRIM	DESCRIPTION
10									HEATER
	05124687AA	1	2, 6		01, 02, 06				With [HDB]
		1	2, 6		11, 12, 14, 15, 16				With [HDB]
		1	2, 6		51, 52, 54, 55, 56				With [HDB]
		1	3, 7		12, 15, 16				With [HDB]
11									NUT
	05133317AA	1	2, 6		01, 02, 06				
	05133317AB	1	2, 6		11, 12, 14, 15, 16				
		1	2, 6		51, 52, 54, 55, 56				
		1	3, 7		12, 15, 16				
12									BOLT
	05133316AA	1	2, 6		01, 02, 06				
		1	2, 6		11, 12, 14, 15, 16				
		1	2, 6		51, 52, 54, 55, 56				
		1	3, 7		12, 15, 16				
13									BRACKET, Heater Core
	05124626AA	1	3, 7		12, 15, 16				
		1	2, 6		01, 02, 06				
		1	2, 6		11, 12, 14, 15, 16				
		1	2, 6		51, 52, 54, 55, 56				
14									CLAMP, Exhaust
	05103627AA	1	2, 6		01, 02, 06				
		1	2, 6		11, 12, 14, 15, 16				

SPRINTER (VA)

SERIES	LINE	BODY	ENGINE	TRANSMISSION
L = LOWLINE	3 = HD DODGE 2WD 6 = Lt. Duty DODGE 4WD 2 = Med. Duty DODGE 2WD 7 = Med. Duty DODGE 4WD	55 = Wagon 140" 54 = Wagon 118" 52 = Wagon 140" 51 = Wagon 118" 12 = Van 140" 11 = Van 118" 06 = Front Section 158" 14 = Van 118" 15 = Van 140" 16 = Van 158" 56 = Wagon 158" 01 = Chassis Forward Control 118" 02 = Chassis Forward Control 140"	EX8 = Engine-2.7L I5 Mercedes Turbo Diesel	DGJ = Transmission-5-Spd. Automatic,W5A580

Auxiliary Warm Water Heater
Figure 24-290

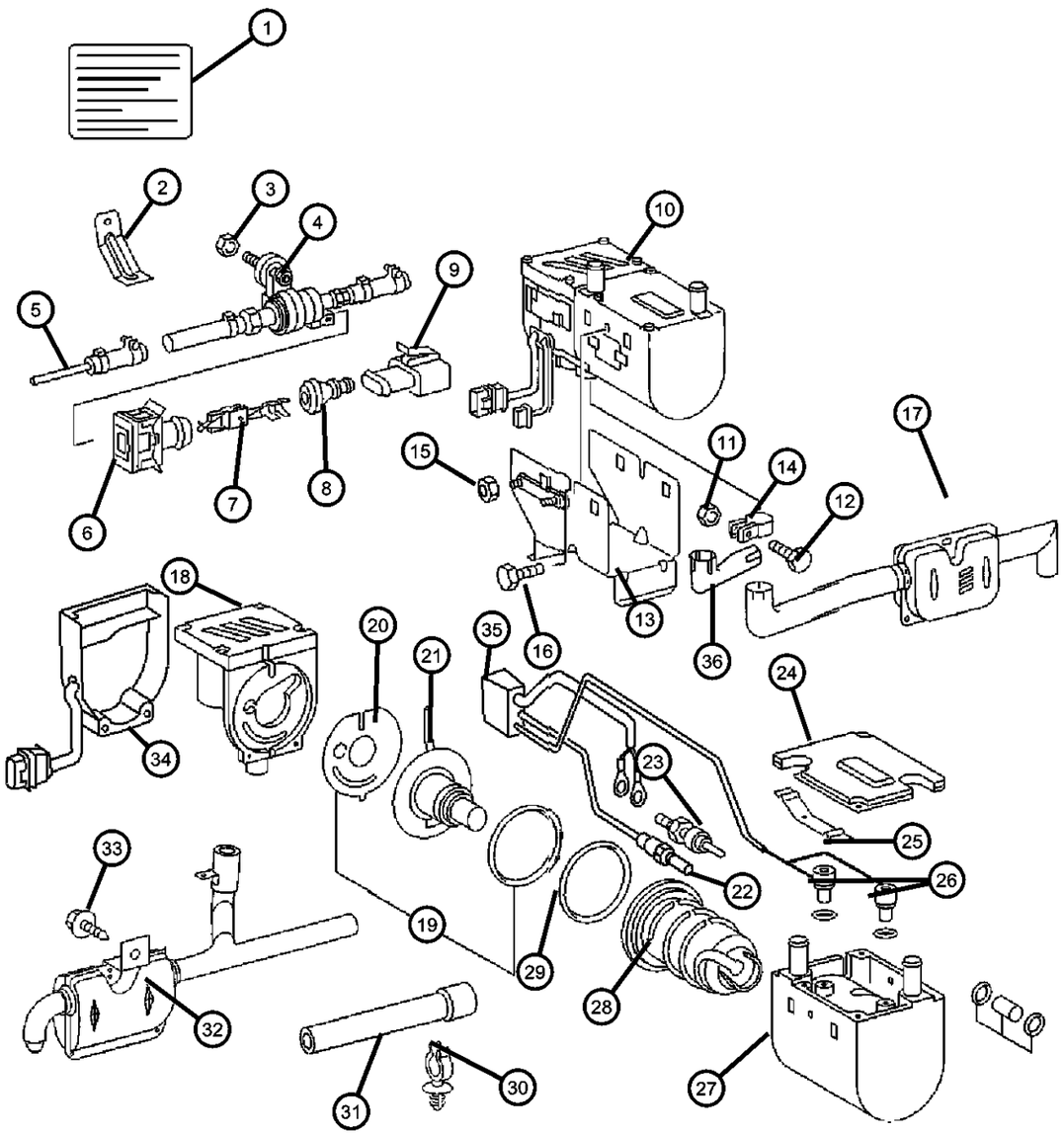

ITEM	PART NUMBER	QTY	LINE	SERIES	BODY	ENGINE	TRANS	TRIM	DESCRIPTION
		1	2, 6		51, 52, 54, 55, 56				
		1	3, 7		12, 15, 16				
15									NUT, Hex
	05097674AA	1	2, 6		01, 02, 06				
		1	2, 6		11, 12, 14, 15, 16				
		1	2, 6		55, 56, 51, 52, 54				
		1	3, 7		12, 15, 16				
16									SCREW
	06104003AA	2	2, 6		01, 02, 06				
		2	2, 6		11, 12, 14, 15, 16				
		2	2, 6		51, 52, 54, 55, 56				
		2	3, 7		02, 06				
		2	3, 7		12, 15, 16				
17									MUFFLER, Exhaust
	05103808AA	1	2, 6		01, 02, 06				
		1	2, 6		11, 12, 14, 15, 16				
		1	2, 6		51, 52, 54, 55, 56				
		1	3, 7		12, 15, 16				
18									BLOWER
	05133299AA	1	2, 6		01, 02, 06				
		1	3, 7		12, 15, 16				
		1	2, 6		11, 12, 14, 15, 16				
		1	2, 6		51, 52, 54, 55, 56				
19									SEAL

SPRINTER (VA)

SERIES	LINE	BODY	ENGINE	TRANSMISSION
L = LOWLINE	3 = HD DODGE 2WD 6 = Lt. Duty DODGE 4WD 2 = Med. Duty DODGE 2WD 7 = Med. Duty DODGE 4WD	55 = Wagon 140" 54 = Wagon 118" 52 = Wagon 140" 51 = Wagon 118" 12 = Van 140" 11 = Van 118" 06 = Front Section 158" 14 = Van 118" 15 = Van 140" 16 = Van 158" 56 = Wagon 158" 01 = Chassis Forward Control 118" 02 = Chassis Forward Control 140"	EX8 = Engine-2.7L I5 Mercedes Turbo Diesel	DGJ = Transmission-5-Spd. Automatic,W5A580

AR = use ase required - = Non illustrrated part

Auxiliary Warm Water Heater
Figure 24-290

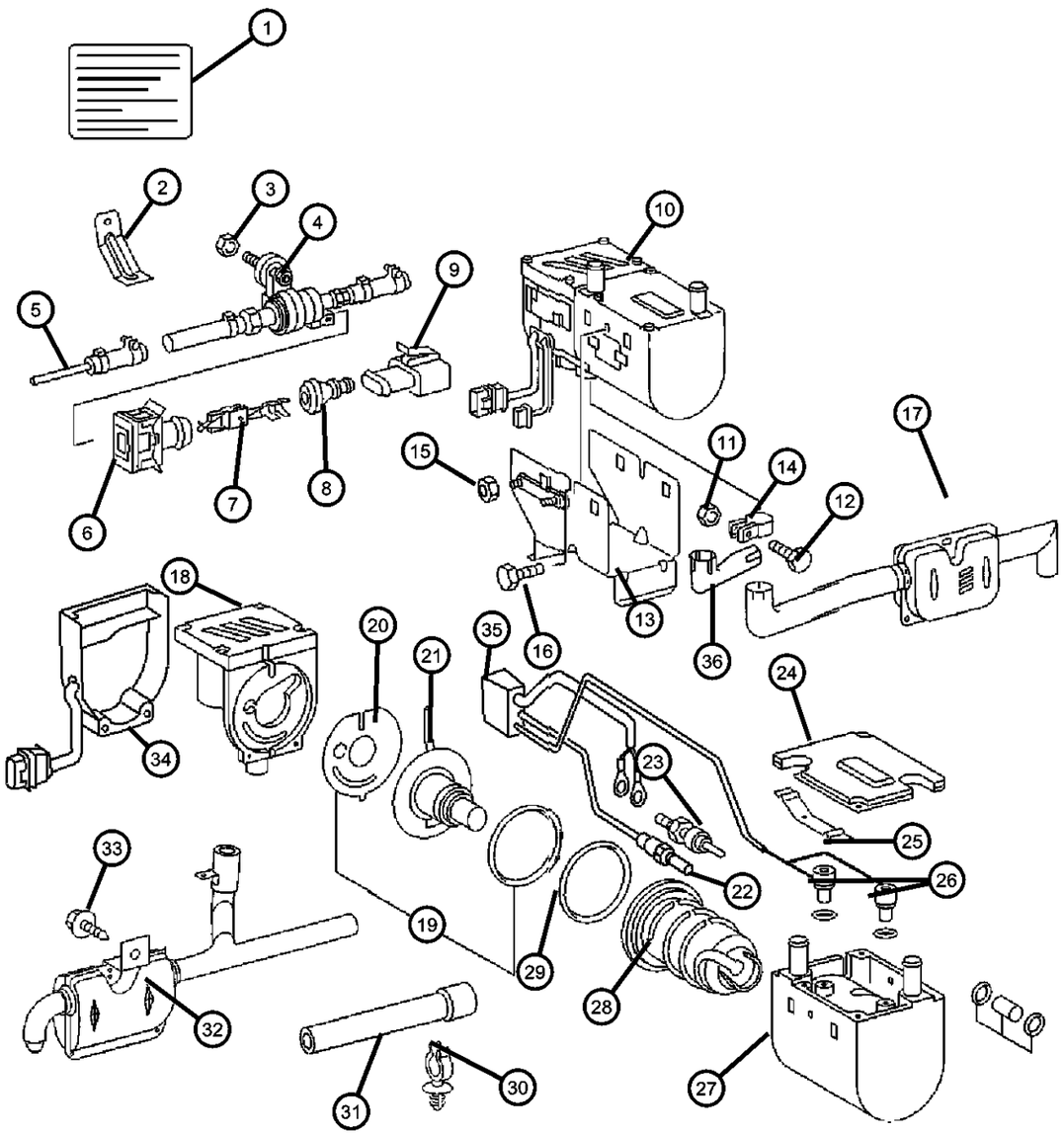

ITEM	PART NUMBER	QTY	LINE	SERIES	BODY	ENGINE	TRANS	TRIM	DESCRIPTION
	05133307AA	1	2, 6		02, 06, 01				
	05133307AB	1	2, 6		11, 12, 14, 15, 16				
		1	2, 6		51, 52, 54, 55, 56				
		1	3, 7		12, 15, 16				
20									PIPE, Heater Core
	05133301AA	1	2, 6		01, 02, 06				
		1	2, 6		11, 12, 14, 15, 16				
		1	2, 6		51, 52, 54, 55, 56				
		1	3, 7		12, 15, 16				
21									SENSOR, Temperature
	05133312AA	1	2, 6		01, 02, 06				
		1	2, 6		11, 12, 14, 15, 16				
		1	2, 6		51, 52, 54, 55, 56				
		1	3, 7		12, 15, 16				
22									SENSOR, Temperature
	05103691AA	1	2, 6		01, 02, 06				
		1	2, 6		11, 12, 14, 15, 16				
		1	2, 6		51, 52, 54, 55, 56				
		1	3, 7		12, 15, 16				
23									PLUG, Water Heater
	05133310AA	1	2, 6		01, 02, 06				
		1	2, 6		51, 52, 54, 55, 56				
		1	2, 6		11, 12, 14, 15, 16				

SPRINTER (VA)

SERIES	LINE	BODY	ENGINE	TRANSMISSION
L = LOWLINE	3 = HD DODGE 2WD 6 = Lt. Duty DODGE 4WD 2 = Med. Duty DODGE 2WD 7 = Med. Duty DODGE 4WD	55 = Wagon 140" 54 = Wagon 118" 52 = Wagon 140" 51 = Wagon 118" 12 = Van 140" 11 = Van 118" 06 = Front Section 158" 14 = Van 118" 15 = Van 140" 16 = Van 158" 56 = Wagon 158" 01 = Chassis Forward Control 118" 02 = Chassis Forward Control 140"	EX8 = Engine-2.7L I5 Mercedes Turbo Diesel	DGJ = Transmission-5-Spd. Automatic,W5A580

Auxiliary Warm Water Heater
Figure 24-290

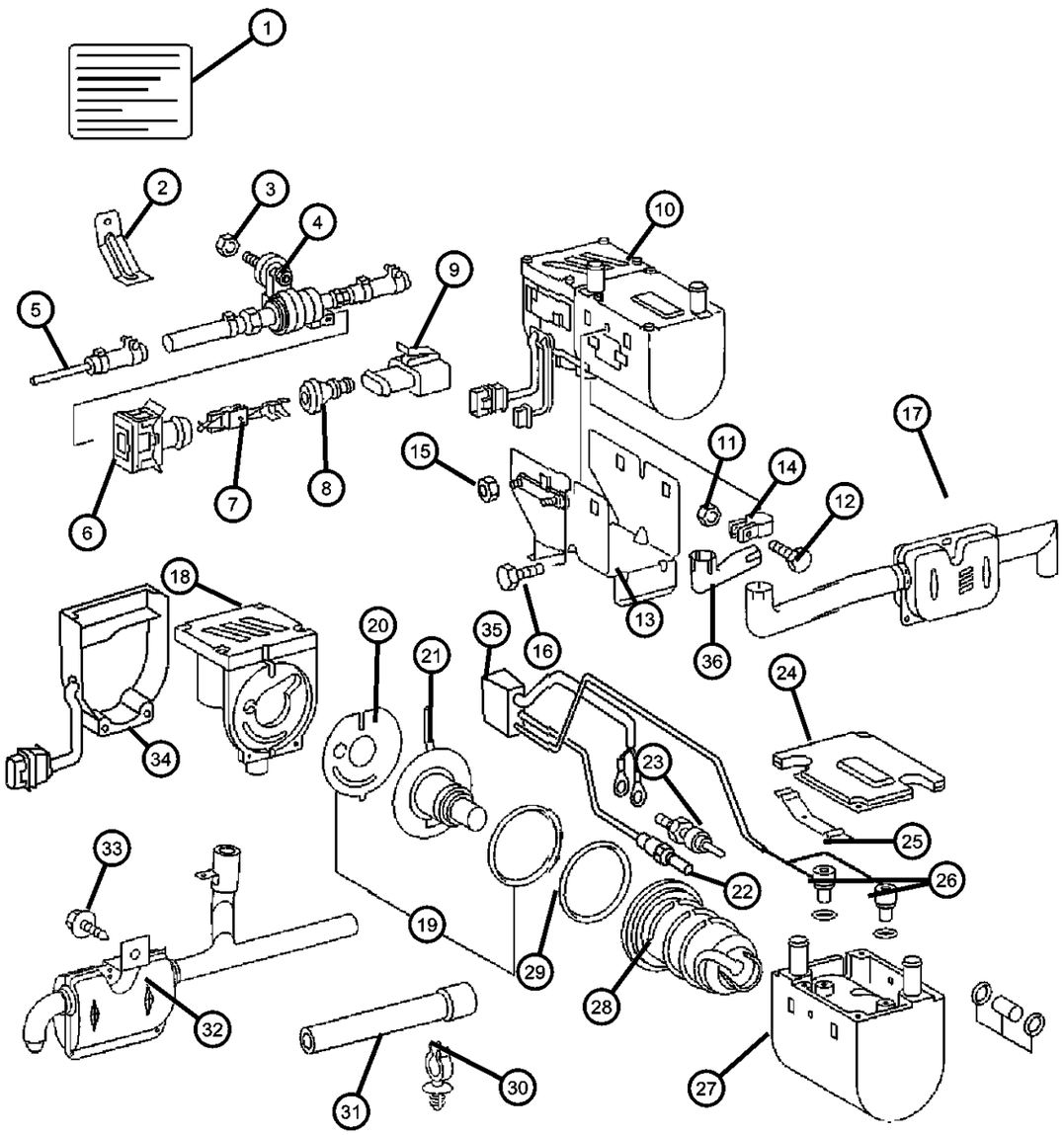

ITEM	PART NUMBER	QTY	LINE	SERIES	BODY	ENGINE	TRANS	TRIM	DESCRIPTION
		1	3, 7		12, 15, 16				
24									COVER, Heater Housing
	05133306AA	1	3, 7		12, 15, 16				
		1	2, 6		01, 02, 06				
		1	2, 6		11, 12, 14, 15, 16				
		1	2, 6		51, 52, 54, 55, 56				
25									CLIP, Spring
	05133313AA	1	2, 6		01, 02, 06				
		1	2, 6		11, 12, 14, 15, 16				
		1	2, 6		51, 52, 54, 55, 56				
		1	3, 7		12, 15, 16				
26									O RING, Heater Core
	05133314AA	1	2, 6		11, 12, 14, 15, 16				
		1	2, 6		01, 02, 06				
		1	2, 6		51, 52, 54, 55, 56				
		1	3, 7		12, 15, 16				
27									HOUSING, Heater
	05133298AA	1	2, 6		01, 02, 06				
		1	2, 6		11, 12, 14, 15, 16				
		1	2, 6		51, 52, 54, 55, 56				
		1	3, 7		12, 15, 16				
28									CORE, Water Heater
	05133303AA	1	2, 6		01, 02, 06				
		1	2, 6		11, 12, 14, 15, 16				

SPRINTER (VA)

SERIES	LINE	BODY	ENGINE	TRANSMISSION
L = LOWLINE	3 = HD DODGE 2WD 6 = Lt. Duty DODGE 4WD 2 = Med. Duty DODGE 2WD 7 = Med. Duty DODGE 4WD	55 = Wagon 140" 54 = Wagon 118" 52 = Wagon 140" 51 = Wagon 118" 12 = Van 140" 11 = Van 118" 06 = Front Section 158" 14 = Van 118" 15 = Van 140" 16 = Van 158" 56 = Wagon 158" 01 = Chassis Forward Control 118" 02 = Chassis Forward Control 140"	EX8 = Engine-2.7L I5 Mercedes Turbo Diesel	DGJ = Transmission-5-Spd. Automatic,W5A580

Auxiliary Warm Water Heater
Figure 24-290

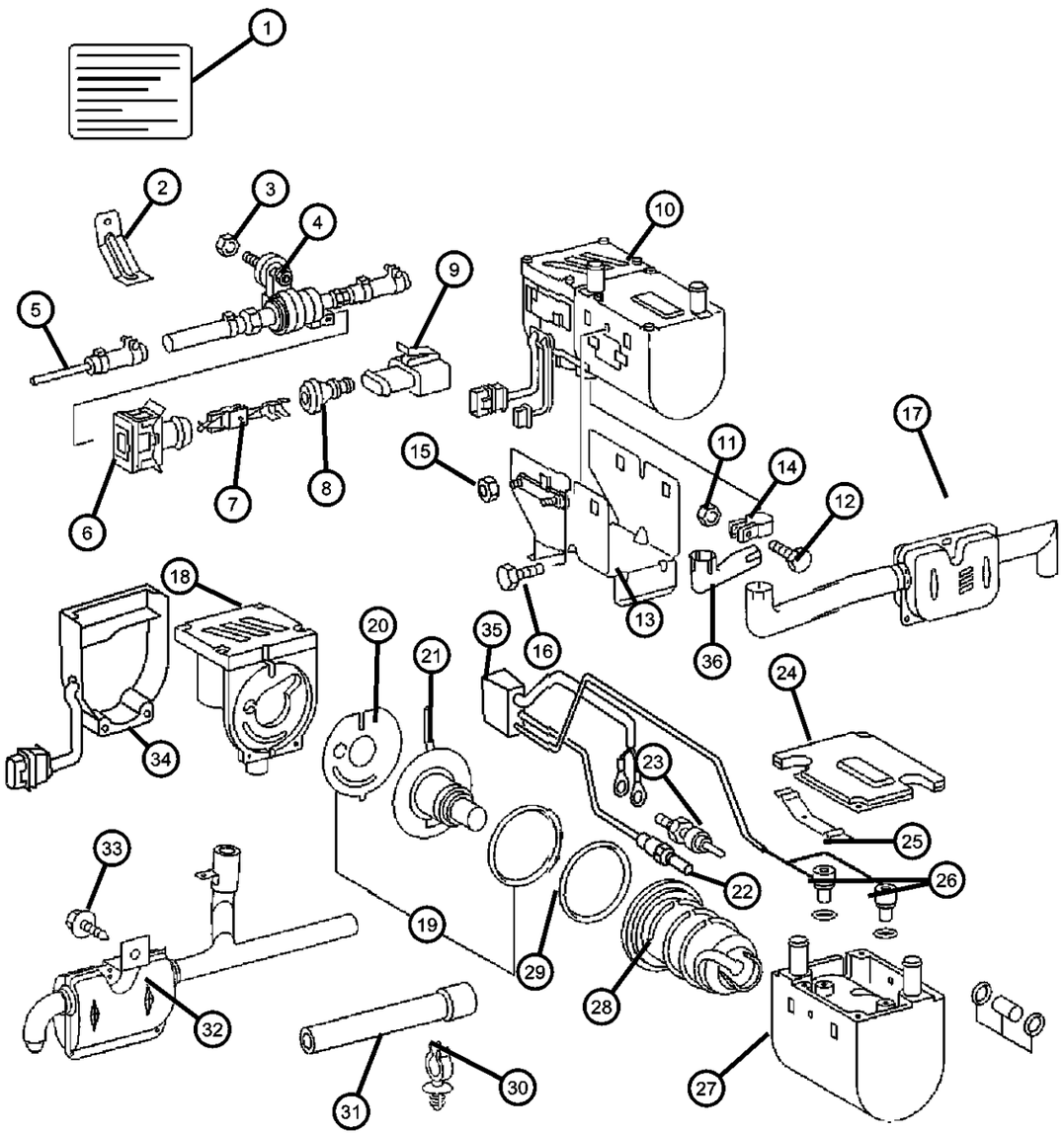

ITEM	PART NUMBER	QTY	LINE	SERIES	BODY	ENGINE	TRANS	TRIM	DESCRIPTION
		1	2, 6		51, 52, 54, 55, 56				
		1	3, 7		12, 15, 16				
29									O RING, Heater Core
	05133309AA	1	2, 6		01, 02, 06				
		1	2, 6		51, 52, 54, 55, 56				
		1	3, 7		12, 15, 16				
		1	2, 6		11, 12, 14, 15, 16				
30									CLIP, Hose
	05119332AA	3	2, 6		01, 02, 06				
		3	2, 6		11, 12, 14, 15, 16				
		3	2, 6		51, 52, 54, 55, 56				
		3	3, 7		12, 15, 16				
31									PIPE, Air Intake
	05124674AA	1	2, 6		01, 02, 06				
		1	2, 6		11, 12, 14, 15, 16				
		1	2, 6		51, 52, 54, 55, 56				
		1	3, 7		12, 15, 16				
32									MUFFLER, Exhaust
	05103848AA	1	2, 6		01, 02, 06				
		1	2, 6		11, 12, 14, 15, 16				
		1	2, 6		51, 52, 54, 55, 56				
		1	3, 7		12, 15, 16				
33									SCREW, Tapping
	06104580AA	1	2, 6		01, 02, 06				

SPRINTER (VA)

SERIES	LINE	BODY	ENGINE	TRANSMISSION
L = LOWLINE	3 = HD DODGE 2WD 6 = Lt. Duty DODGE 4WD 2 = Med. Duty DODGE 2WD 7 = Med. Duty DODGE 4WD	55 = Wagon 140" 54 = Wagon 118" 52 = Wagon 140" 51 = Wagon 118" 12 = Van 140" 11 = Van 118" 06 = Front Section 158" 14 = Van 118" 15 = Van 140" 16 = Van 158" 56 = Wagon 158" 01 = Chassis Forward Control 118" 02 = Chassis Forward Control 140"	EX8 = Engine-2.7L I5 Mercedes Turbo Diesel	DGJ = Transmission-5-Spd. Automatic,W5A580

AR = use ase required - = Non illustrrated part

Auxiliary Warm Water Heater
Figure 24-290

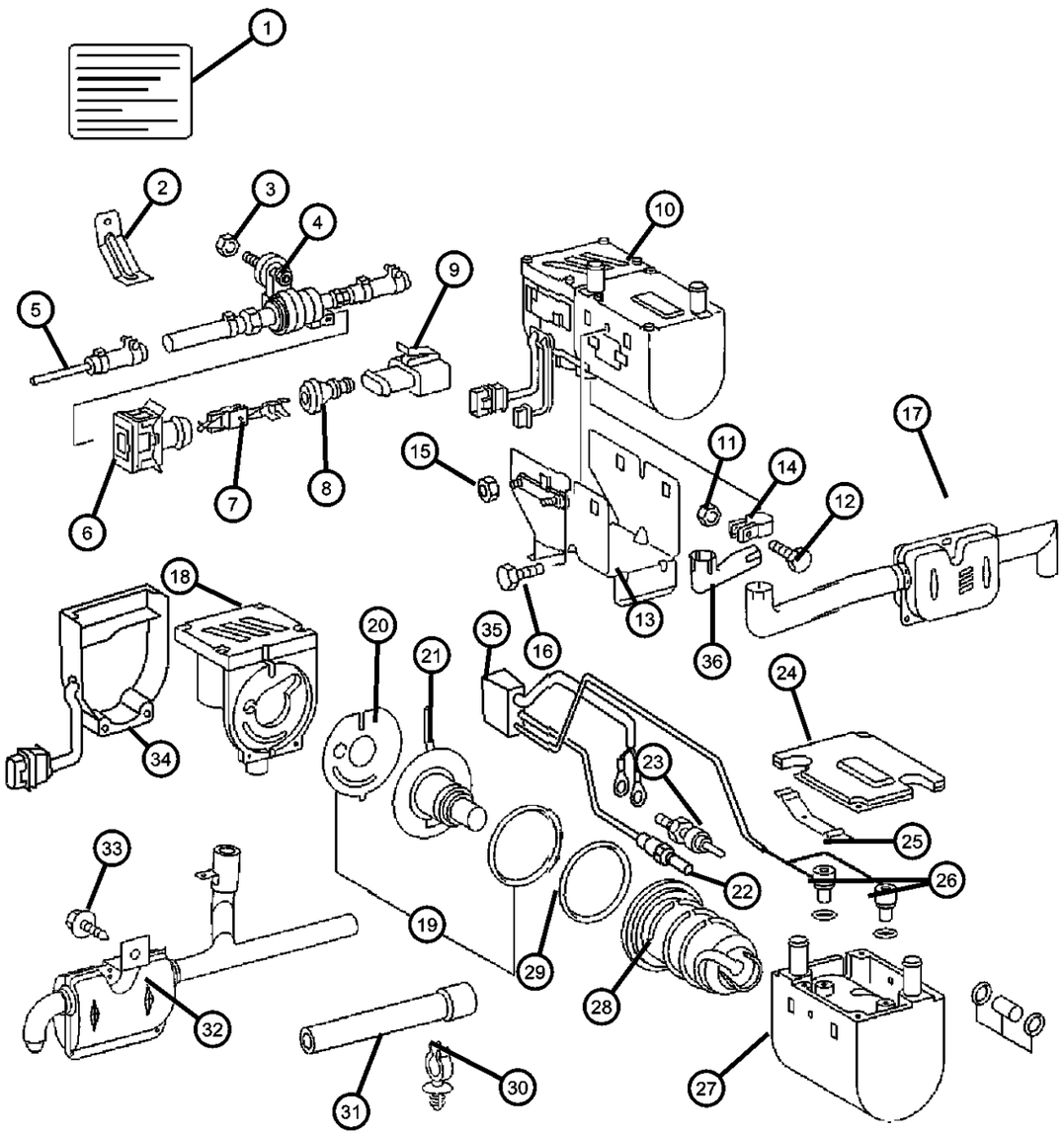

ITEM	PART NUMBER	QTY	LINE	SERIES	BODY	ENGINE	TRANS	TRIM	DESCRIPTION
		1	2, 6		11, 12, 14, 15, 16				
		2	2, 6		51, 52, 54, 55, 56				
		2	3, 7		12, 15, 16				
34									CONTROL UNIT, Air Conditiing
	05103648AA	1	2, 6		01, 02, 06				
		1	2, 6		11, 12, 14, 15, 16				
		1	2, 6		51, 52, 54, 55, 56				
		1	3, 7		02, 06				
		1	3, 7		12, 15, 16				
35									MODULE, Heater Control
	05133305AA	1	2, 6		01, 02, 06				
		1	2, 6		11, 12, 14, 15, 16				
		1	2, 6		51, 52, 54, 55, 56				
		1	3, 7		12, 15, 16				
36									TUBE, Heater Core
	05133318AA	1	2, 6		01, 02, 06				
		1	2, 6		11, 12, 14, 15, 16				
		1	2, 6		51, 52, 54, 55, 56				
		1	3, 7		12, 15, 16				

SPRINTER (VA)

SERIES	LINE	BODY	ENGINE	TRANSMISSION
L = LOWLINE	3 = HD DODGE 2WD 6 = Lt. Duty DODGE 4WD 2 = Med. Duty DODGE 2WD 7 = Med. Duty DODGE 4WD	55 = Wagon 140" 54 = Wagon 118" 52 = Wagon 140" 51 = Wagon 118" 12 = Van 140" 11 = Van 118" 06 = Front Section 158" 14 = Van 118" 15 = Van 140" 16 = Van 158" 56 = Wagon 158" 01 = Chassis Forward Control 118" 02 = Chassis Forward Control 140"	EX8 = Engine-2.7L I5 Mercedes Turbo Diesel	DGJ = Transmission-5-Spd. Automatic,W5A580

Control
Figure 24-320

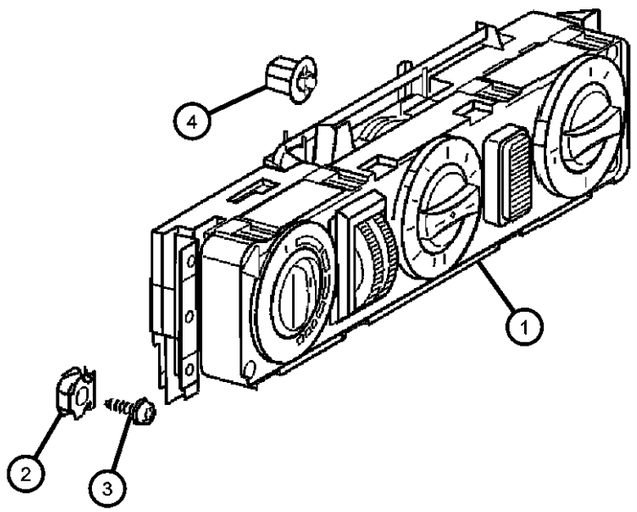

ITEM	PART NUMBER	QTY	LINE	SERIES	BODY	ENGINE	TRANS	TRIM	DESCRIPTION
1									CONTROL, A/C And Heater
	05103643AA	1	2, 6		01, 02, 06				Auto Temp
		1	2, 6		11, 12, 14, 15, 16				Auto Temp
		1	2, 6		51, 52, 54, 55, 56				Auto Temp
		1	3, 7		12, 15, 16				Auto Temp
	05103644AA	1	2, 6		01, 02, 06				W/AUXILIARY HOT WATERHEATER
		1	2, 6		11, 12, 14, 15, 16				W/AUXILIARY HOT WATERHEATER
		1	2, 6		51, 52, 54, 55, 56				W/AUXILIARY HOT WATERHEATER
	05103690AA	1	2, 6		01, 02, 06				Manual
		1	2, 6		11, 12, 14, 15, 16				Manual
		1	2, 6		51, 52, 54, 55, 56				Manual
		1	3, 7		02, 06				Manual
		1	3, 7		12, 15, 16				Manual
2									NUT, Spring
	05125861AA	2	2, 6		01, 02, 06				
		4	2, 6		11, 12, 14, 15, 16				
		4	2, 6		51, 52, 54, 55, 56				
		4	3, 7		12, 15, 16				
3	06104010AA	1							SCREW
4									BULB
	05133468AA	1	2, 6		01, 02, 06				
		1	2, 6		11, 12, 14, 15, 16				
		1	2, 6		51, 52, 54, 55, 56				
		1	3, 7		12, 15, 16				

SPRINTER (VA)

SERIES	LINE	BODY	ENGINE	TRANSMISSION
L = LOWLINE	3 = HD DODGE 2WD 6 = Lt. Duty DODGE 4WD 2 = Med. Duty DODGE 2WD 7 = Med. Duty DODGE 4WD	55 = Wagon 140" 54 = Wagon 118" 52 = Wagon 140" 51 = Wagon 118" 12 = Van 140" 11 = Van 118" 06 = Front Section 158" 14 = Van 118" 15 = Van 140" 16 = Van 158" 56 = Wagon 158" 01 = Chassis Forward Control 118" 02 = Chassis Forward Control 140"	EX8 = Engine-2.7L I5 Mercedes Turbo Diesel	DGJ = Transmission-5-Spd. Automatic,W5A580

Compressor and Mounting
Figure 24-420

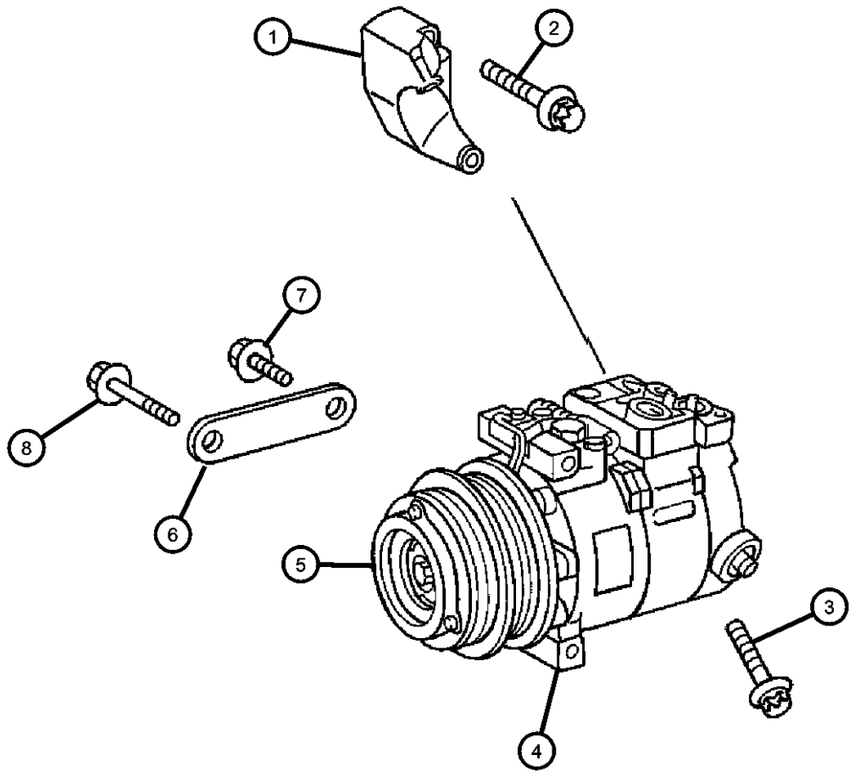

ITEM	PART NUMBER	QTY	LINE	SERIES	BODY	ENGINE	TRANS	TRIM	DESCRIPTION
1									SUPPORT
	05117682AA	1	3, 7		02, 06	EX8, EX9			
		1	3, 7		12, 15, 16	EX8, EX9			
		1	2, 6		01, 02, 06	EX8, EX9			
		1	2, 6		11, 12, 14, 15, 16	EX8, EX9			
		1	2, 6		51, 52, 54, 55, 56	EX8, EX9			
2									SCREW
	06104031AA	1	2, 6		11, 12, 14, 15, 16	EX8			
		1	2, 6		01, 02, 06	EX8			
		1	3, 7		12, 15, 16	EX8			
		1	2, 6		51, 52, 54, 55, 56	EX8			
		1	3, 7		02, 06	EX8			
3									SCREW
	06104035AA	2	2, 6		01, 02, 06	EX9			
		2	2, 6		11, 12, 14, 15, 16	EX9			
		2	3, 7		15, 16, 12	EX9			
		2	2, 6		51, 52, 54, 55, 56	EX9			
		2	3, 7		02, 06	EX9			
4									COMPRESSOR, Air Conditioning
	05117666AA	1	2, 3, 6, 7			EX8			
	05117668AA	1	2, 6		52, 55, 56	EX8			With [HBD]
5									CLUTCH, A/C Compressor
	05133208AA	1	3, 7		02, 06	EX9			
		1	3, 7		12, 15, 16	EX9			
6									BRACKET, A/C Compressor
	05117686AA	1	2, 6		01, 02, 06	EX8, EX9			

SPRINTER (VA)

SERIES	LINE	BODY	ENGINE	TRANSMISSION
L = LOWLINE	3 = HD DODGE 2WD 6 = Lt. Duty DODGE 4WD 2 = Med. Duty DODGE 2WD 7 = Med. Duty DODGE 4WD	55 = Wagon 140" 54 = Wagon 118" 52 = Wagon 140" 51 = Wagon 118" 12 = Van 140" 11 = Van 118" 06 = Front Section 158" 14 = Van 118" 15 = Van 140" 16 = Van 158" 56 = Wagon 158" 01 = Chassis Forward Control 118" 02 = Chassis Forward Control 140"	EX8 = Engine-2.7L I5 Mercedes Turbo Diesel	DGJ = Transmission-5-Spd. Automatic,W5A580

AR = use ase required - = Non illustrrated part

Compressor and Mounting
Figure 24-420

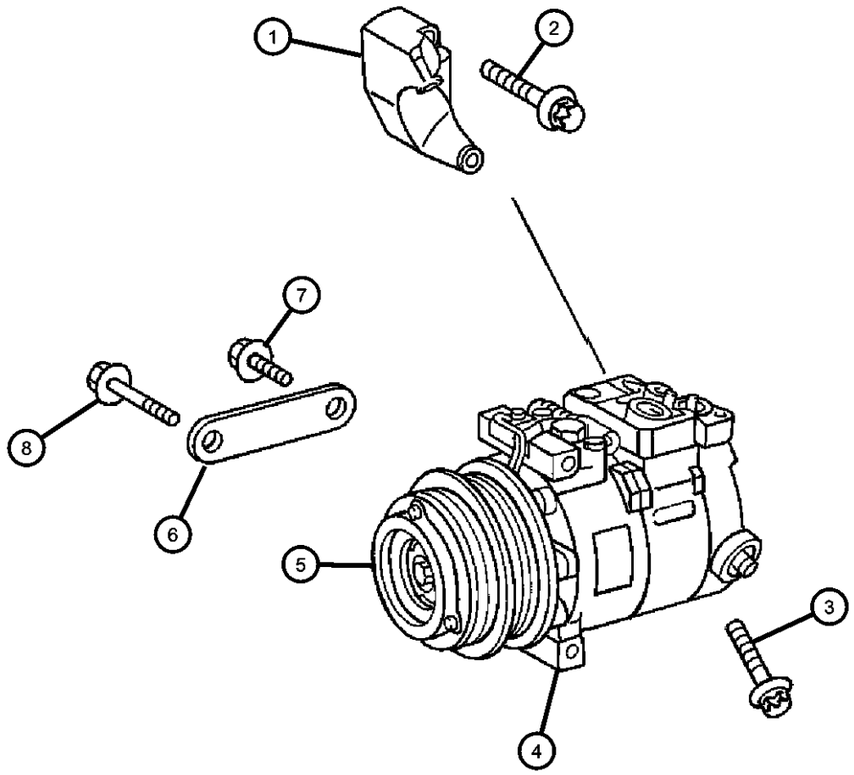

ITEM	PART NUMBER	QTY	LINE	SERIES	BODY	ENGINE	TRANS	TRIM	DESCRIPTION
		1	2, 6		11, 12, 14, 15, 16	EX8, EX9			
		1	2, 6		51, 52, 54, 55, 56	EX8, EX9			
		1	3, 7		02, 06	EX8, EX9			
		1	3, 7		12, 15, 16	EX8, EX9			
7	06104022AA	1							SCREW
8									SCREW
	06104036AA	1	2, 6		01, 02, 06	EX8, EX9			
		1	2, 6		51, 52, 54, 55, 56	EX8, EX9			
		1	3, 7		02, 06	EX8, EX9			
		1	3, 7		12, 15, 16	EX8, EX9			
		1	2, 6		11, 12, 14, 15, 16	EX8, EX9			

SPRINTER (VA)

SERIES	LINE	BODY	ENGINE	TRANSMISSION
L = LOWLINE	3 = HD DODGE 2WD 6 = Lt. Duty DODGE 4WD 2 = Med. Duty DODGE 2WD 7 = Med. Duty DODGE 4WD	55 = Wagon 140" 54 = Wagon 118" 52 = Wagon 140" 51 = Wagon 118" 12 = Van 140" 11 = Van 118" 06 = Front Section 158" 14 = Van 118" 15 = Van 140" 16 = Van 158" 56 = Wagon 158" 01 = Chassis Forward Control 118" 02 = Chassis Forward Control 140"	EX8 = Engine-2.7L I5 Mercedes Turbo Diesel	DGJ = Transmission-5-Spd. Automatic,W5A580

AR = use ase required - = Non illustrrated part

Air Ducts And Outlets, Front
Figure 24-630

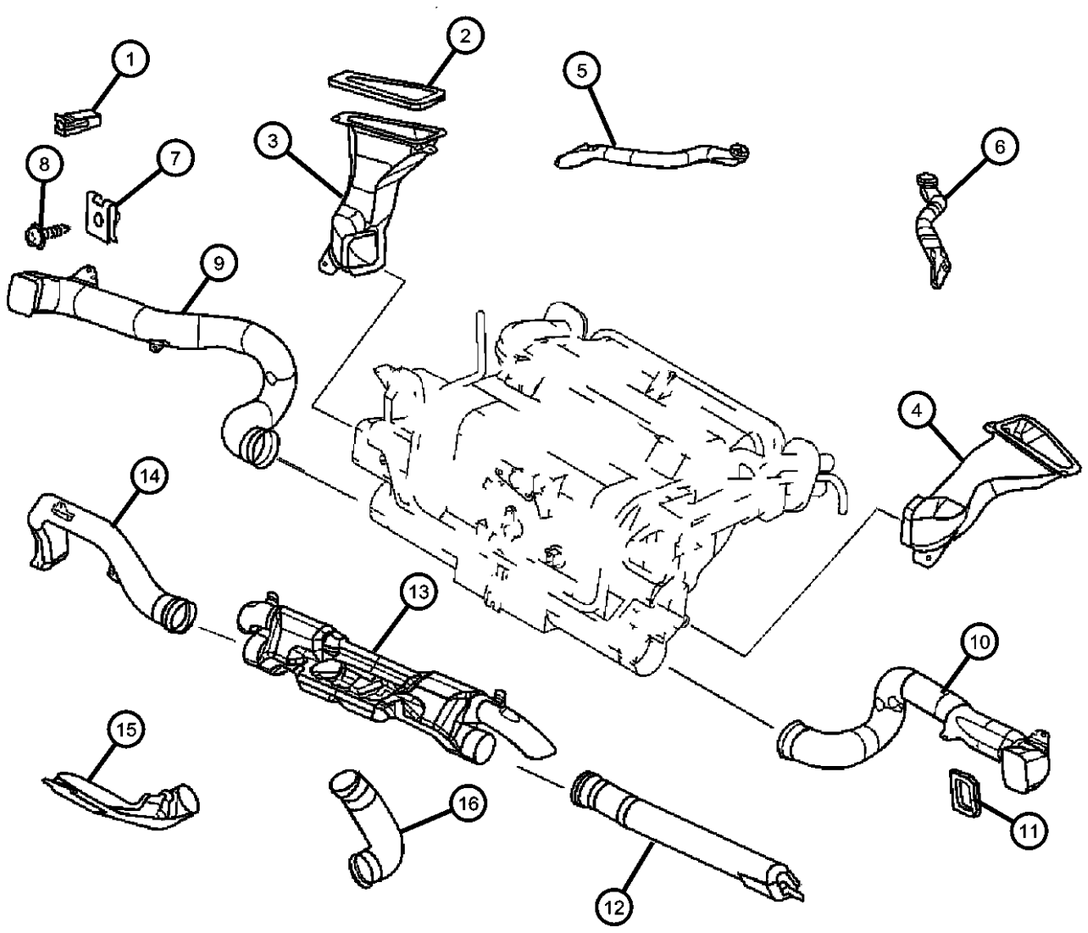

ITEM	PART NUMBER	QTY	LINE	SERIES	BODY	ENGINE	TRANS	TRIM	DESCRIPTION
1									NUT, Plastic Snap-in
	05125576AA	2	2, 6		01, 02, 06				
		2	2, 6		11, 12, 14, 15, 16				
		2	2, 6		51, 52, 54, 55, 56				
		2	3, 7		02, 06				
		2	3, 7		12, 15, 16				
2									SEAL
	05124781AA	1	2, 6		11, 12, 14, 15, 16				Left
		1	2, 6		51, 52, 54, 55, 56				Left
		1	3, 7		12, 15, 16				Left
	05124782AA	1	2, 6		11, 12, 14, 15, 16				Right
		1	2, 6		51, 52, 54, 55, 56				Right
		1	3, 7		12, 15, 16				Right
3									DUCT, Defroster
	05133445AA	1	2, 6		01, 02, 06				
		1	2, 6		11, 12, 14, 15, 16				
		1	2, 6		51, 52, 54, 55, 56				
		1	3, 7		12, 15, 16				
4									DUCT
	05124744AA	1	2, 6		11, 12, 14, 15, 16				
		1	2, 6		51, 52, 54, 55, 56				
		1	3, 7		12, 15, 16				
5									DUCT
	05124745AA	1	2, 6		11, 12, 14, 15, 16				

SPRINTER (VA)

SERIES	LINE	BODY	ENGINE	TRANSMISSION
L = LOWLINE	3 = HD DODGE 2WD 6 = Lt. Duty DODGE 4WD 2 = Med. Duty DODGE 2WD 7 = Med. Duty DODGE 4WD	55 = Wagon 140" 54 = Wagon 118" 52 = Wagon 140" 51 = Wagon 118" 12 = Van 140" 11 = Van 118" 06 = Front Section 158" 14 = Van 118" 15 = Van 140" 16 = Van 158" 56 = Wagon 158" 01 = Chassis Forward Control 118" 02 = Chassis Forward Control 140"	EX8 = Engine-2.7L I5 Mercedes Turbo Diesel	DGJ = Transmission-5-Spd. Automatic,W5A580

AR = use ase required - = Non illustrrated part

Air Ducts And Outlets, Front
Figure 24-630

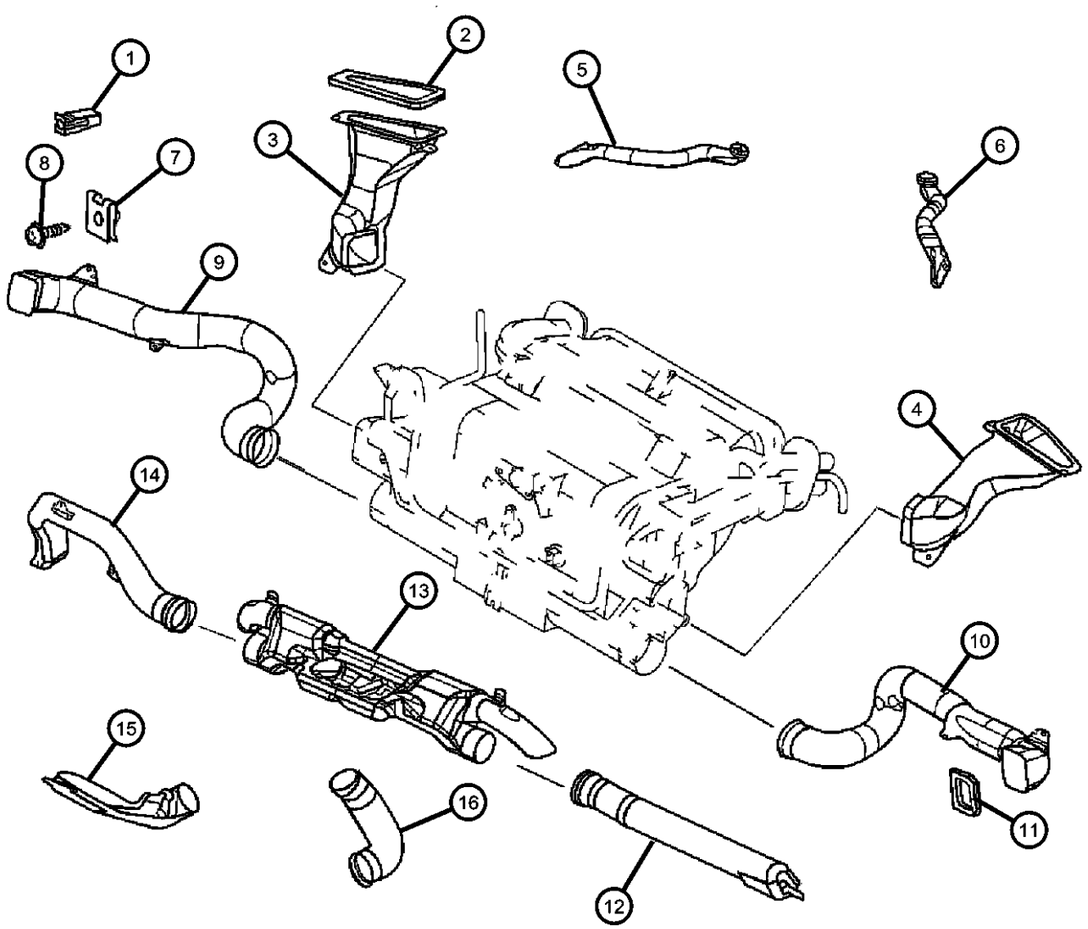

ITEM	PART NUMBER	QTY	LINE	SERIES	BODY	ENGINE	TRANS	TRIM	DESCRIPTION
		1	2, 6		51, 52, 54, 55, 56				
		1	3, 7		12, 15, 16				
6									DUCT
	05124746AA	1	2, 6		11, 12, 14, 15, 16				
		1	2, 6		51, 52, 54, 55, 56				
		1	3, 7		12, 15, 16				
7									NUT, Clip-On
	05125857AB	2	2, 6		11, 12, 14, 15, 16				
		2	2, 6		51, 52, 54, 55, 56				
		2	3, 7		12, 15, 16				
8									SCREW
	06104610AA	2	2, 6		11, 12, 14, 15, 16				
		2	2, 6		51, 52, 54, 55, 56				
		2	3, 7		12, 15, 16				
9									DUCT
	05124744AA	1	2, 6		11, 12, 14, 15, 16				
		1	2, 6		51, 52, 54, 55, 56				
		1	3, 7		12, 15, 16				
10									DUCT
	05124742AA	1	2, 6		11, 12, 14, 15, 16				
		1	2, 6		51, 52, 54, 55, 56				
		1	3, 7		12, 15, 16				
11									SEAL

SPRINTER (VA)

SERIES	LINE	BODY	ENGINE	TRANSMISSION
L = LOWLINE	3 = HD DODGE 2WD 6 = Lt. Duty DODGE 4WD 2 = Med. Duty DODGE 2WD 7 = Med. Duty DODGE 4WD	55 = Wagon 140" 54 = Wagon 118" 52 = Wagon 140" 51 = Wagon 118" 12 = Van 140" 11 = Van 118" 06 = Front Section 158" 14 = Van 118" 15 = Van 140" 16 = Van 158" 56 = Wagon 158" 01 = Chassis Forward Control 118" 02 = Chassis Forward Control 140"	EX8 = Engine-2.7L I5 Mercedes Turbo Diesel	DGJ = Transmission-5-Spd. Automatic,W5A580

AR = use ase required - = Non illustrrated part

Air Ducts And Outlets, Front
Figure 24-630

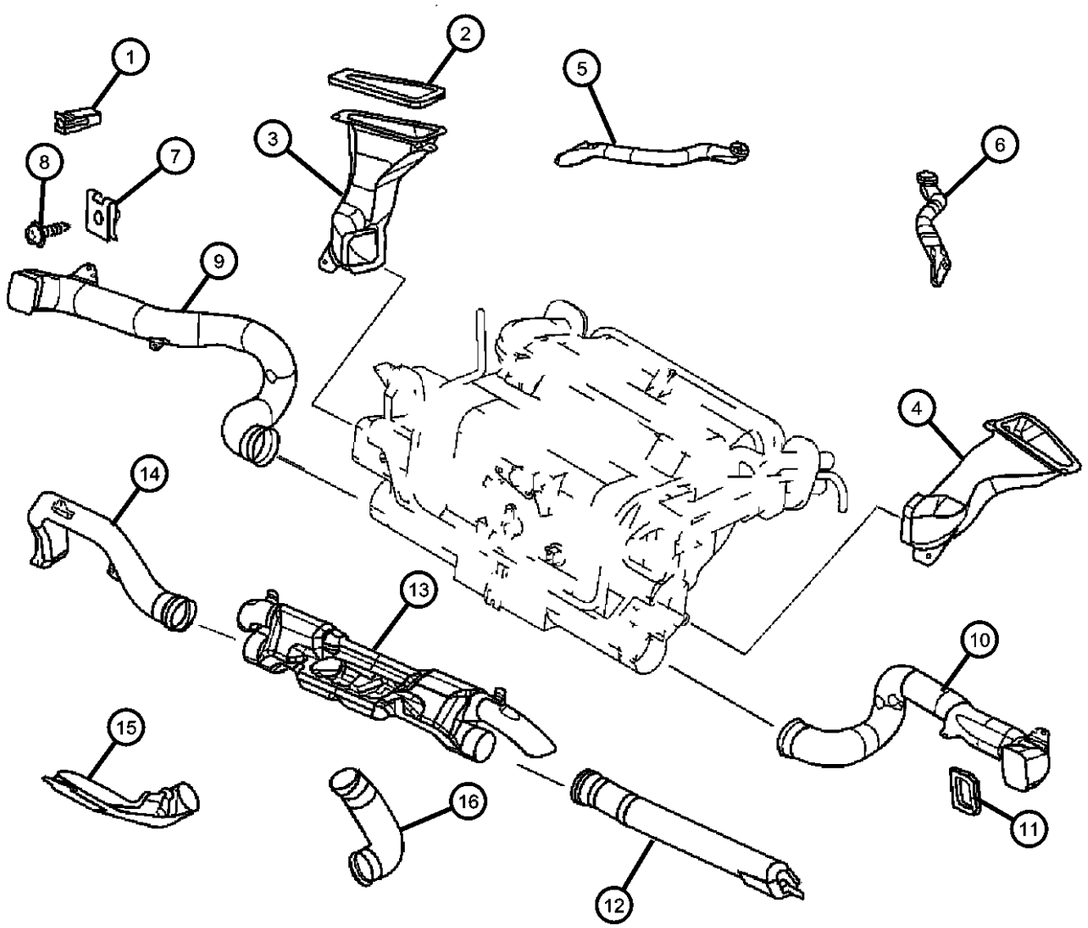

ITEM	PART NUMBER	QTY	LINE	SERIES	BODY	ENGINE	TRANS	TRIM	DESCRIPTION
	05124788AA	1	2, 6		11, 12, 14, 15, 16				Left
		1	2, 6		51, 52, 54, 55, 56				Left
		1	3, 7		12, 15, 16				Left
	05124789AA	1	2, 6		11, 12, 14, 15, 16				Right
		1	2, 6		51, 52, 54, 55, 56				Right
		1	3, 7		12, 15, 16				Right
12									DUCT
	05124740AA	1	2, 6		11, 12, 14, 15, 16				
		1	2, 6		51, 52, 54, 55, 56				
		1	3, 7		12, 15, 16				
13									DUCT
	05124737AA	1	2, 6		11, 12, 14, 15, 16				
		1	2, 6		51, 52, 54, 55, 56				
		1	3, 7		12, 15, 16				
14									DUCT
	05124739AA	1	2, 6		11, 12, 14, 15, 16				
		1	2, 6		51, 52, 54, 55, 56				
		1	3, 7		12, 15, 16				
15									DUCT
	05124748AA	1	2, 6		11, 12, 14, 15, 16				
		1	2, 6		51, 52, 54, 55, 56				
		1	3, 7		12, 15, 16				
16									DUCT

SPRINTER (VA)

SERIES	LINE	BODY	ENGINE	TRANSMISSION
L = LOWLINE	3 = HD DODGE 2WD 6 = Lt. Duty DODGE 4WD 2 = Med. Duty DODGE 2WD 7 = Med. Duty DODGE 4WD	55 = Wagon 140" 54 = Wagon 118" 52 = Wagon 140" 51 = Wagon 118" 12 = Van 140" 11 = Van 118" 06 = Front Section 158" 14 = Van 118" 15 = Van 140" 16 = Van 158" 56 = Wagon 158" 01 = Chassis Forward Control 118" 02 = Chassis Forward Control 140"	EX8 = Engine-2.7L I5 Mercedes Turbo Diesel	DGJ = Transmission-5-Spd. Automatic,W5A580

Air Ducts And Outlets, Front
Figure 24-630

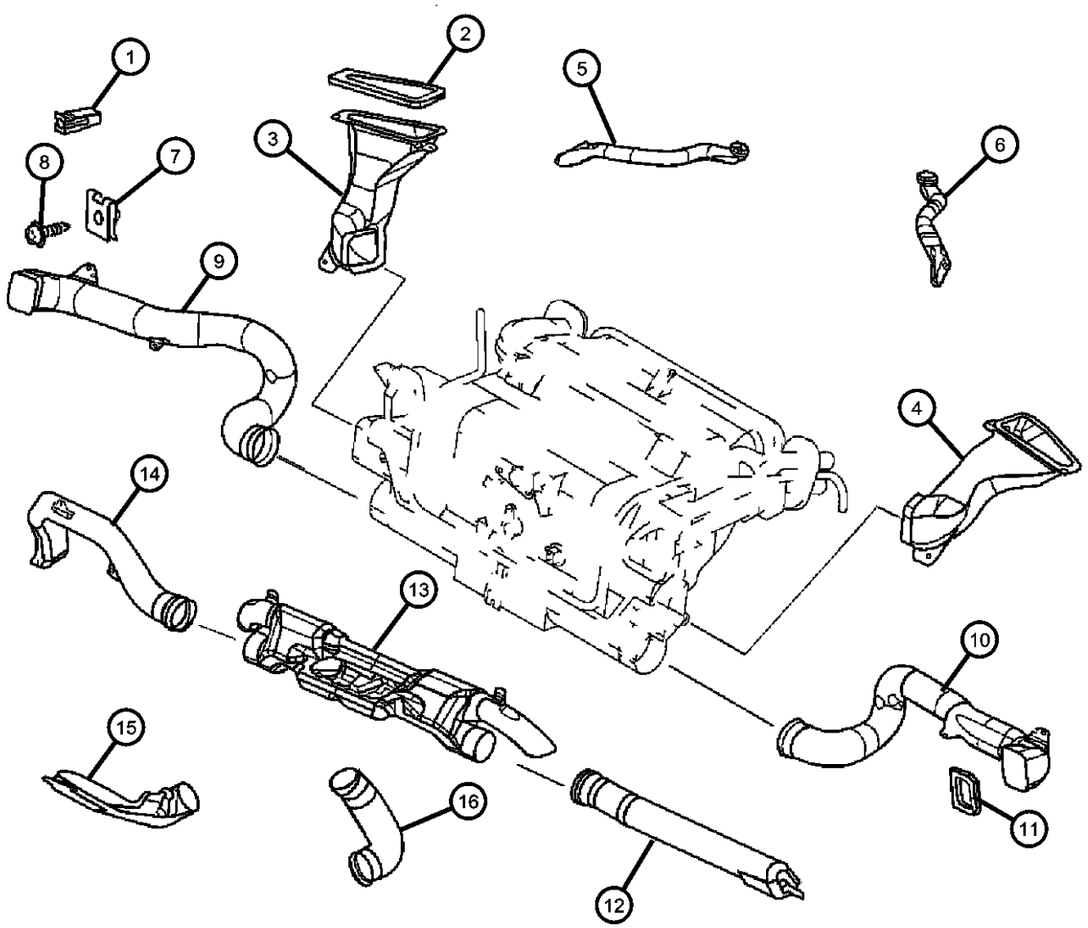

ITEM	PART NUMBER	QTY	LINE	SERIES	BODY	ENGINE	TRANS	TRIM	DESCRIPTION
	05124747AA	1	2, 6		11, 12, 14, 15, 16				
		1	2, 6		51, 52, 54, 55, 56				
		1	3, 7		12, 15, 16				

SPRINTER (VA)

SERIES	LINE	BODY	ENGINE	TRANSMISSION
L = LOWLINE	3 = HD DODGE 2WD 6 = Lt. Duty DODGE 4WD 2 = Med. Duty DODGE 2WD 7 = Med. Duty DODGE 4WD	55 = Wagon 140" 54 = Wagon 118" 52 = Wagon 140" 51 = Wagon 118" 12 = Van 140" 11 = Van 118" 06 = Front Section 158" 14 = Van 118" 15 = Van 140" 16 = Van 158" 56 = Wagon 158" 01 = Chassis Forward Control 118" 02 = Chassis Forward Control 140"	EX8 = Engine-2.7L I5 Mercedes Turbo Diesel	DGJ = Transmission-5-Spd. Automatic,W5A580

AR = use ase required - = Non illustrrated part

Air Ducts And Outlets, Rear
Figure 24-640

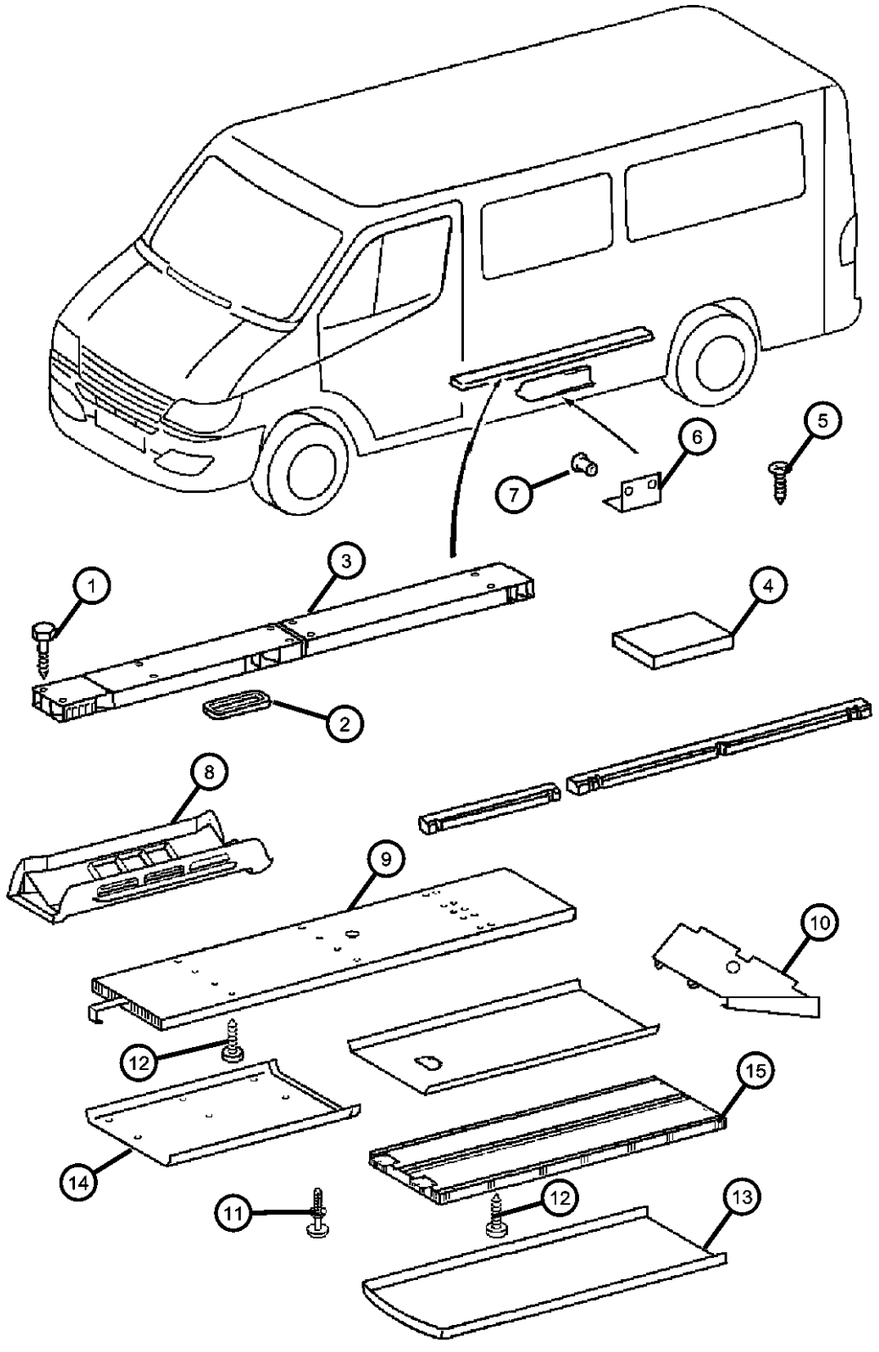

ITEM	PART NUMBER	QTY	LINE	SERIES	BODY	ENGINE	TRANS	TRIM	DESCRIPTION
1	05126093AA	10	3, 7		12, 15, 16				SCREW
2									SEAL
	05102646AA	1	2, 6		01, 02, 06				
	05124763AA	1	2, 6		11, 12, 14, 15, 16				
		1	2, 6		51, 52, 54, 55, 56				
		1	3, 7		12, 15, 16				
3									HOUSING, Air Duct
	05124656AA	1	3, 7		12, 15, 16				Rear
	05124655AA	1	2, 6		12, 15, 16				
		1	2, 6		52, 55, 56				
		1	3, 7		12, 15, 16				Front
4									SEAL
	05124763AA	1	2, 6		11, 12, 14, 15, 16				
		1	2, 6		51, 52, 54, 55, 56				
		1	7, 3		12, 15, 16				
5		1							SCREW, (NOT SERVICED)
6		1							BRACKET, (NOT SERVICED)
7									RIVET, Blind Bulb
	05133417AA	3	2, 6		01, 02, 06				
		3	2, 6		11, 12, 14, 15, 16				
		3	2, 6		51, 52, 54, 55, 56				
		3	3, 7		02, 06				
		3	3, 7		16, 12, 15				
8		3							INSULATOR, 05133349aa, (NOT SERVICED)
9									AIR DUCT

SPRINTER (VA)

SERIES	LINE	BODY	ENGINE	TRANSMISSION
L = LOWLINE	3 = HD DODGE 2WD 6 = Lt. Duty DODGE 4WD 2 = Med. Duty DODGE 2WD 7 = Med. Duty DODGE 4WD	55 = Wagon 140" 54 = Wagon 118" 52 = Wagon 140" 51 = Wagon 118" 12 = Van 140" 11 = Van 118" 06 = Front Section 158" 14 = Van 118" 15 = Van 140" 16 = Van 158" 56 = Wagon 158" 01 = Chassis Forward Control 118" 02 = Chassis Forward Control 140"	EX8 = Engine-2.7L I5 Mercedes Turbo Diesel	DGJ = Transmission-5-Spd. Automatic,W5A580

AR = use ase required - = Non illustrrated part

Air Ducts And Outlets, Rear
Figure 24-640

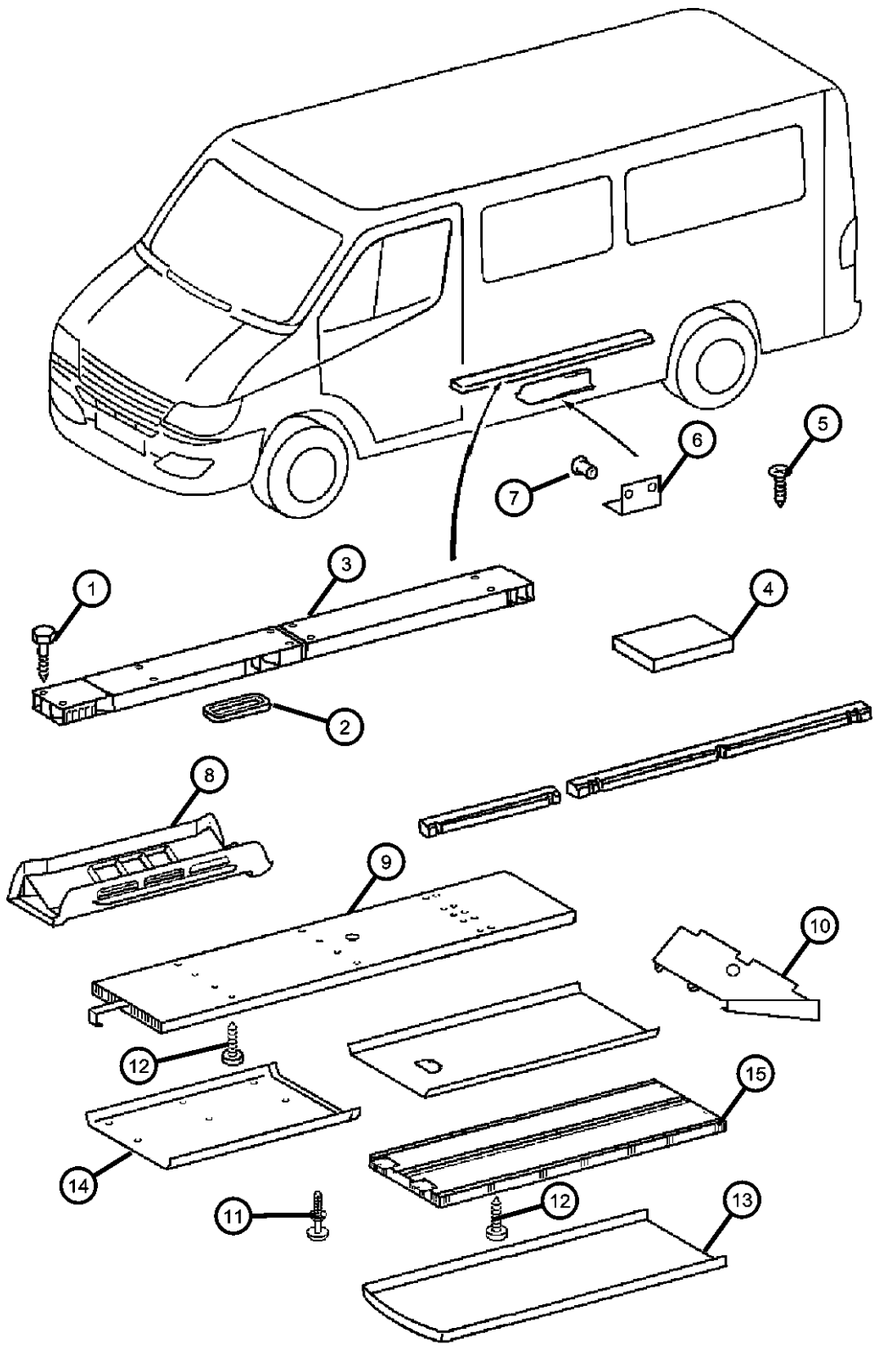

ITEM	PART NUMBER	QTY	LINE	SERIES	BODY	ENGINE	TRANS	TRIM	DESCRIPTION
	05132290AA	1	2, 6		51, 52, 54, 55, 56				
		1	2, 6		11, 12, 14, 15, 16				
10									AIR DUCT
	05132312AA	1	2, 6		11, 12, 14, 15, 16				
		1	2, 6		51, 52, 54, 55, 56				
11									RIVET
	05104541AA	2	3, 7		12, 15, 16				
		2	2, 6		11, 12, 14, 15, 16				
		2	2, 6		55, 56, 51, 52, 54				
12									SCREW, Self-Tapping
	05133449AA	20	2, 6		11, 12, 14, 15, 16				
		20	2, 6		51, 52, 54, 55, 56				
13									HOUSING, Air Duct
	05104482AA	1	2, 6		12, 14, 15, 16, 11				
		1	2, 6		51, 52, 54, 55, 56				
14									AIR DUCT
	05132291AA	1	2, 6		16				
		1	2, 6		56				
15									AIR DUCT
	05132292AA	1	2, 6		16				
		1	2, 6		56				
-16	05133453AA	6	2, 6		51, 52, 54, 55, 56				SPRING, Filter

SPRINTER (VA)

SERIES	LINE	BODY	ENGINE	TRANSMISSION
L = LOWLINE	3 = HD DODGE 2WD 6 = Lt. Duty DODGE 4WD 2 = Med. Duty DODGE 2WD 7 = Med. Duty DODGE 4WD	55 = Wagon 140" 54 = Wagon 118" 52 = Wagon 140" 51 = Wagon 118" 12 = Van 140" 11 = Van 118" 06 = Front Section 158" 14 = Van 118" 15 = Van 140" 16 = Van 158" 56 = Wagon 158" 01 = Chassis Forward Control 118" 02 = Chassis Forward Control 140"	EX8 = Engine-2.7L I5 Mercedes Turbo Diesel	DGJ = Transmission-5-Spd. Automatic,W5A580

AR = use ase required - = Non illustrrated part

Ventilator, Roof Mounted
Figure 24-650

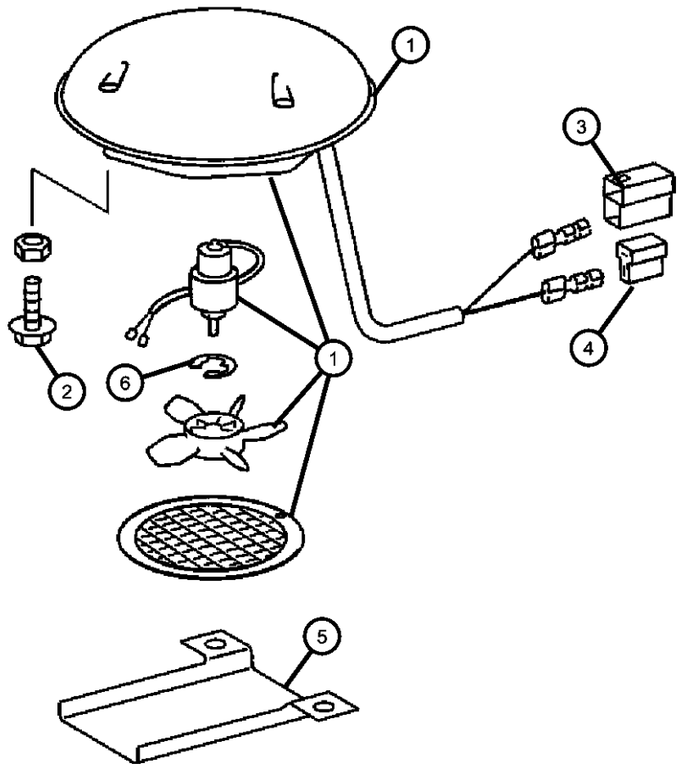

ITEM	PART NUMBER	QTY	LINE	SERIES	BODY	ENGINE	TRANS	TRIM	DESCRIPTION
1									HOUSING, Forced Vent Outlet
	05103696AA	1	2, 6		11, 12, 14, 15, 16				
		1	3, 7		12, 15, 16				
2									BOLT, M6x20
	06104351AA	9	2, 6		11, 12, 14, 15, 16				
		9	3, 7		12, 15, 16				
3									INSULATOR, 2 Way Female
	05103754AA	1	2, 6		11, 12, 14, 15, 16				
		1	3, 7		12, 15, 16				
4									CONNECTOR
	05103751AA	1	2, 6		11, 12, 14, 15, 16				
		1	3, 7		12, 15, 16				
5									COVER, Bracket
	05124790AA	1	2, 6		11, 12, 14, 15, 16				
		1	3, 7		12, 15, 16				
6									CLIP, Fan Shroud
	05133639AA	1	2, 6		11, 12, 14, 15, 16				
		1	3, 7		12, 15, 16				
-7									GRILLE, Vent
	05133638AA	1	2, 6		11, 12, 14, 15, 16				
		1	3, 7		12, 15, 16				

SPRINTER (VA)

SERIES	LINE	BODY	ENGINE	TRANSMISSION
L = LOWLINE	3 = HD DODGE 2WD 6 = Lt. Duty DODGE 4WD 2 = Med. Duty DODGE 2WD 7 = Med. Duty DODGE 4WD	55 = Wagon 140" 54 = Wagon 118" 52 = Wagon 140" 51 = Wagon 118" 12 = Van 140" 11 = Van 118" 06 = Front Section 158" 14 = Van 118" 15 = Van 140" 16 = Van 158" 56 = Wagon 158" 01 = Chassis Forward Control 118" 02 = Chassis Forward Control 140"	EX8 = Engine-2.7L I5 Mercedes Turbo Diesel	DGJ = Transmission-5-Spd. Automatic,W5A580

Group - DVA

Doors and Related Parts

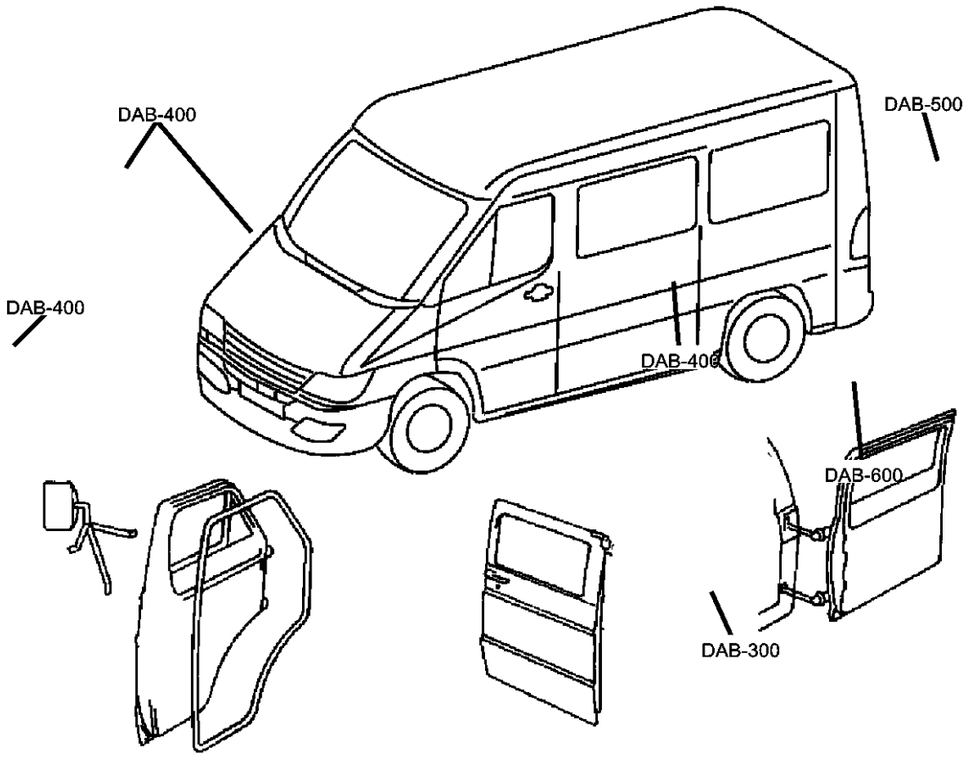

DVA-100 Front Door	DVA-300 Door, Sliding Cargo	DVA-400 Door, Dual and Single Cargo	DVA-500 Exterior Mirror
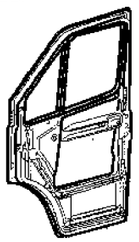	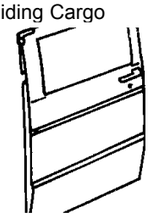	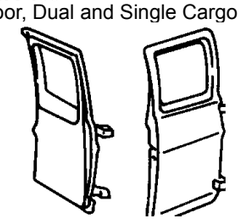	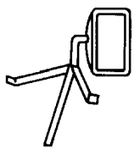

Group - DVA Doors and Related Parts

Illustration Title — Group-Fig. No.

Front Door
Door, Front Shell And Hinges ..... Fig. DVA - 110
Door, Front Glass And Regulator Handle ..... Fig. DVA - 120
Door, Front Exterior Handle And Links ..... Fig. DVA - 130

Door, Sliding Cargo
Door, Sliding Cargo Glass ..... Fig. DVA - 320
Door, Sliding Cargo Lock And Controls ..... Fig. DVA - 330

Door, Dual and Single Cargo
Door, Cargo Shell And Hinges ..... Fig. DVA - 410
Door, Cargo Glass And Hardware ..... Fig. DVA - 420
Door, Cargo Lock And Control ..... Fig. DVA - 430

Exterior Mirror
Mirrors, Exterior ..... Fig. DVA - 520

Door, Front Shell And Hinges
Figure DVA-110

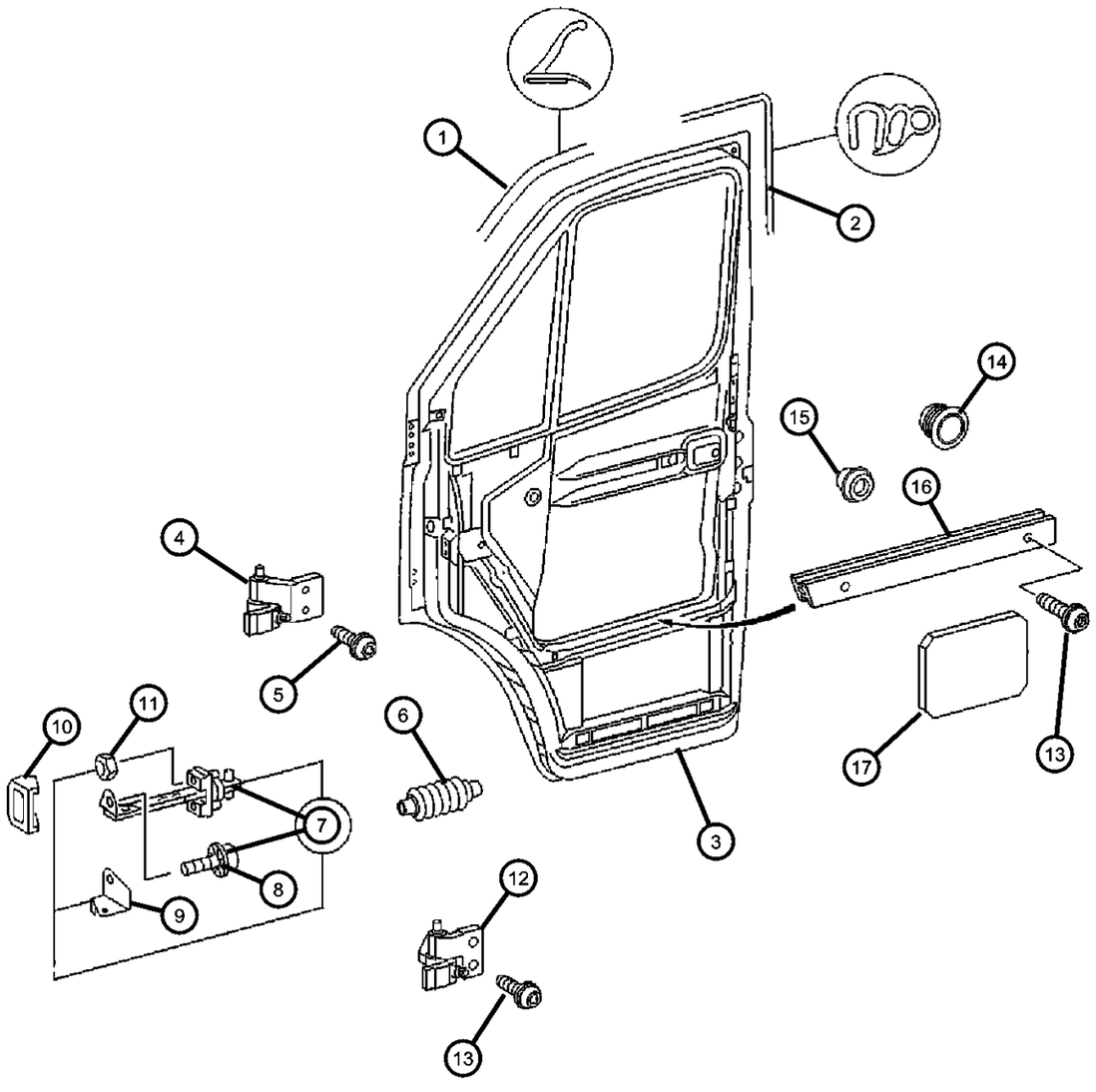

ITEM	PART NUMBER	QTY	LINE	SERIES	BODY	ENGINE	TRANS	TRIM	DESCRIPTION
1									SEAL, Door
	05133518AA	1	2, 6	L	01, 02, 06				
		1	2, 6	L	11, 12, 14, 15, 16				
		1	2, 6	L	51, 52, 54, 55, 56				
2									SEAL, Door
	05104301AA	1	2, 6	L	11, 12, 14, 15, 16				
		1	2, 6	L	51, 52, 54, 55, 56				
3									PANEL, Front Door, Shell
	05135988AA	1	2, 6	L	01, 02, 06				Right
		1	3, 7	L	02, 06				Right
	05135991AA	1	3, 7	L	02, 06				Left
		1	2, 6	L	11, 12, 14, 15, 16				Left
		1	2, 6	L	01, 02, 06				Left
4									HINGE, Door, Upper
	05104321AA	1	2, 6	L	11, 12, 14, 15, 16				Left
		1	2, 6	L	51, 52, 54, 55, 56				Left
		1	3, 7	L	12, 15, 16				Left
	05104324AA	1	2, 6	L	11, 12, 14, 15, 16				Right
		1	2, 6	L	51, 52, 54, 55, 56				Right
		1	3, 7	L	12, 15, 16				Right
5	05103780AA	1	3, 7	L	12, 15				SCREW
6									GROMMET, Door Wiring
	05125915AA	2	2, 6	L	01, 02, 06				
		2	2, 6	L	11, 12, 14, 15, 16				

SPRINTER (VA)

SERIES	LINE	BODY	ENGINE	TRANSMISSION
L = LOWLINE	3 = HD DODGE 2WD 6 = Lt. Duty DODGE 4WD 2 = Med. Duty DODGE 2WD 7 = Med. Duty DODGE 4WD	55 = Wagon 140" 54 = Wagon 118" 52 = Wagon 140" 51 = Wagon 118" 12 = Van 140" 11 = Van 118" 06 = Front Section 158" 14 = Van 118" 15 = Van 140" 16 = Van 158" 56 = Wagon 158" 01 = Chassis Forward Control 118" 02 = Chassis Forward Control 140"	EX8 = Engine-2.7L I5 Mercedes Turbo Diesel	DGJ = Transmission-5-Spd. Automatic,W5A580

Door, Front Shell And Hinges
Figure DVA-110

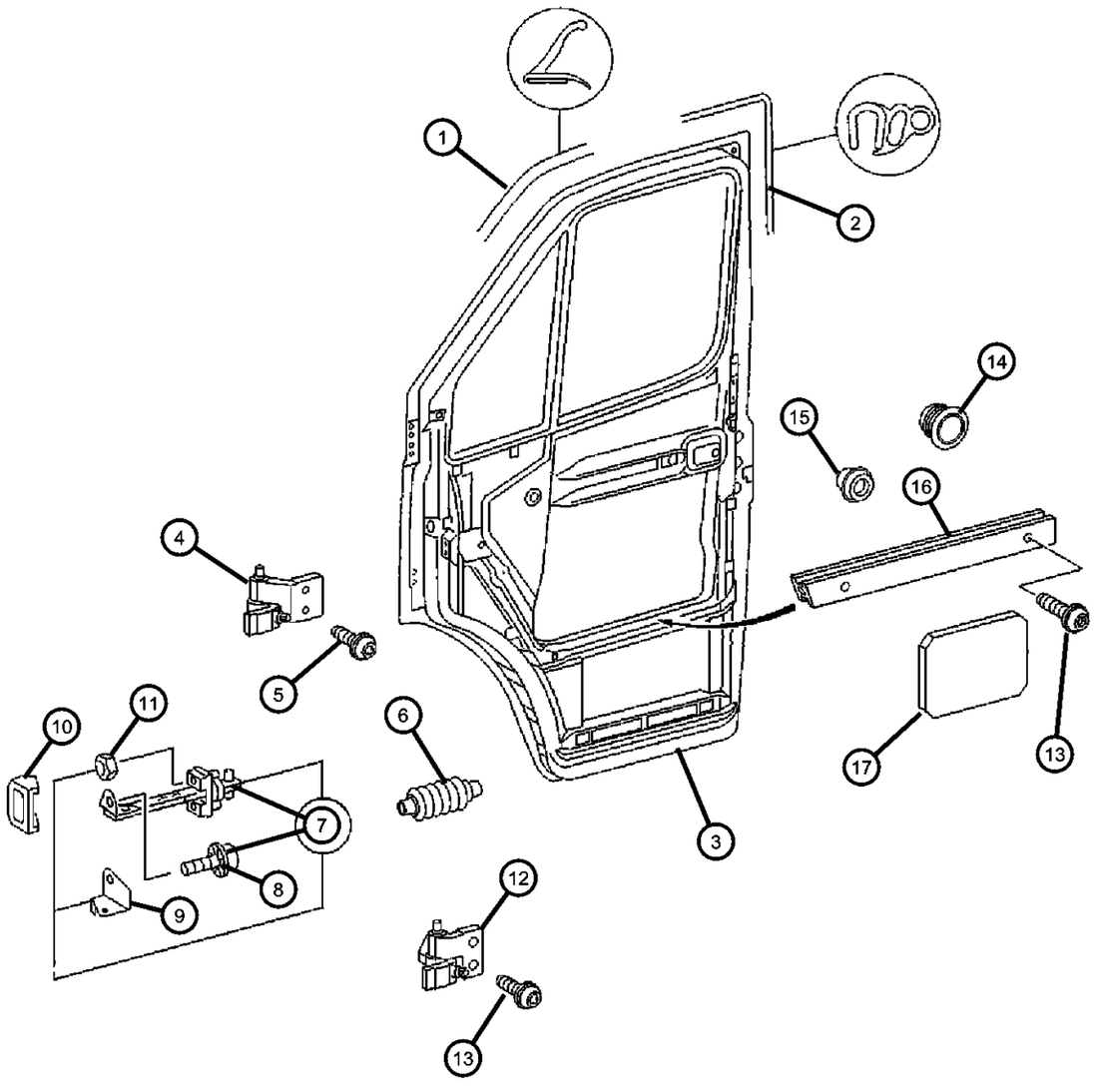

ITEM	PART NUMBER	QTY	LINE	SERIES	BODY	ENGINE	TRANS	TRIM	DESCRIPTION
		2	2, 6	L	51, 52, 54, 55, 56				
		2	3, 7	L	02, 06				
		2	3, 7	L	12, 15, 16				
7									CHECK, Front Door
	05104335AA	1	2, 6	L	51, 52, 54, 55, 56				Left
		1	3, 7	L	02, 06				Left
		1	3, 7	L	12, 15, 16				Left
	05104338AA	1	2, 6	L	01, 02, 06				Right
		1	2, 6	L	11, 12, 14, 15, 16				Right
		1	2, 6	L	51, 52, 54, 55, 56				Right
		1	3, 7	L	02, 06				Right
		1	3, 7	L	12, 15, 16				Right
		1	2, 6	L	01, 02, 06				Left
		1	2, 6	L	11, 12, 14, 15, 16				Left
8									SCREW
	05103788AA	2	2, 6	L	11, 12, 14, 15, 16				
		2	2, 6	L	51, 52, 54, 55, 56				
		2	3, 7	L	12, 15, 16				
9									BRACKET, Check Arm
	05103667AA	1	2, 6	L	11, 12, 14, 15, 16				
		1	2, 6	L	51, 52, 54, 55, 56				
		1	3, 7	L	12, 15, 16				
10									SEAL, Front Door

SPRINTER (VA)

SERIES	LINE	BODY	ENGINE	TRANSMISSION
L = LOWLINE	3 = HD DODGE 2WD 6 = Lt. Duty DODGE 4WD 2 = Med. Duty DODGE 2WD 7 = Med. Duty DODGE 4WD	55 = Wagon 140" 54 = Wagon 118" 52 = Wagon 140" 51 = Wagon 118" 12 = Van 140" 11 = Van 118" 06 = Front Section 158" 14 = Van 118" 15 = Van 140" 16 = Van 158" 56 = Wagon 158" 01 = Chassis Forward Control 118" 02 = Chassis Forward Control 140"	EX8 = Engine-2.7L I5 Mercedes Turbo Diesel	DGJ = Transmission-5-Spd. Automatic,W5A580

AR = use ase required - = Non illustrrated part

Door, Front Shell And Hinges
Figure DVA-110

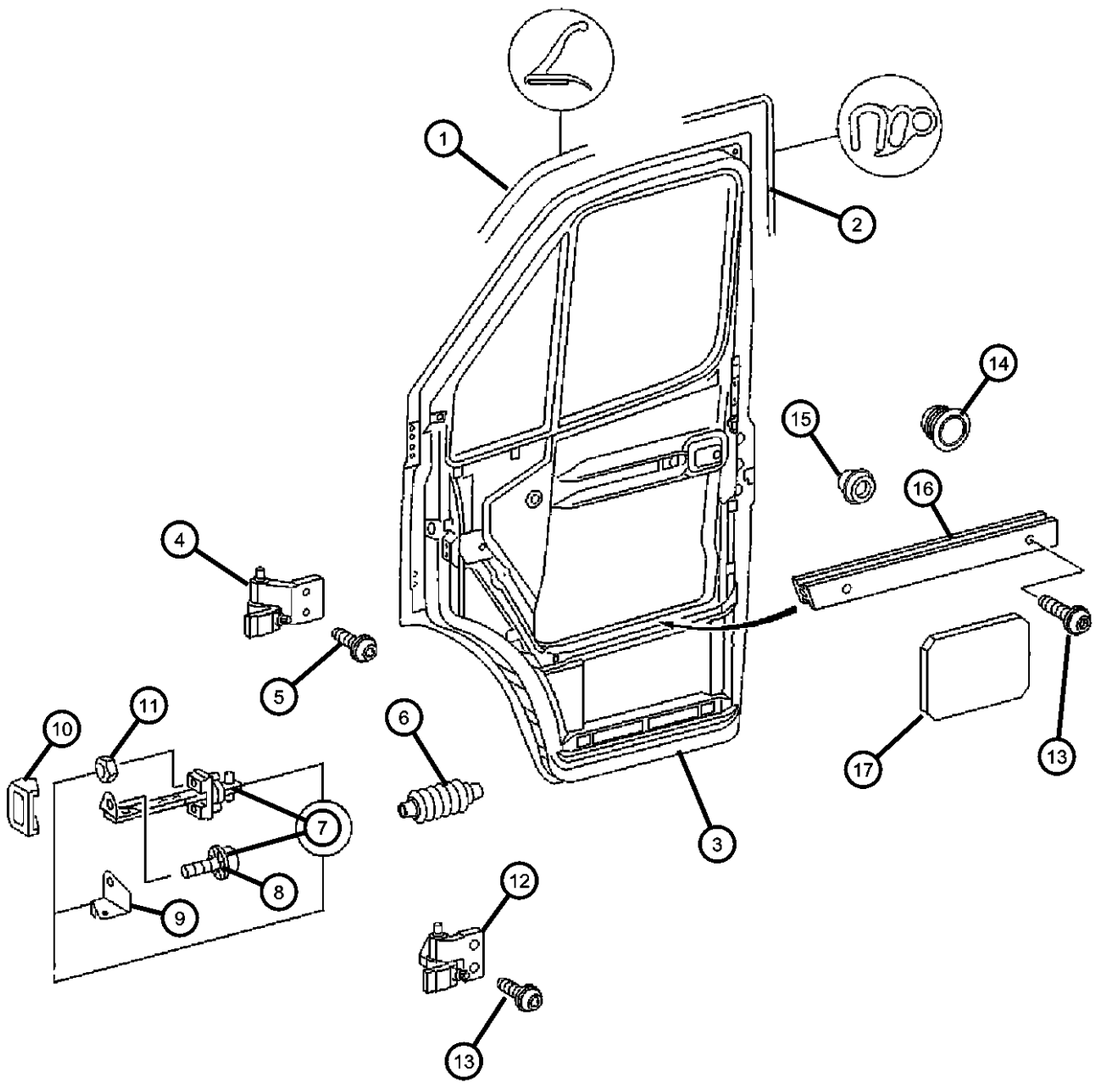

ITEM	PART NUMBER	QTY	LINE	SERIES	BODY	ENGINE	TRANS	TRIM	DESCRIPTION
	05123750AA	1	2, 6	L	51, 52, 54, 55, 56				
		1	3, 7	L	12, 15, 16				
		1		L	01, 02, 06				
11									NUT, Hex, M6
	05127449AA	1	2, 6	L	01, 02, 06				
		2	2, 6	L	51, 52, 54, 55, 56				
		2	3, 7	L	02, 06				
		2	3, 7	L	12, 15, 16				
		2	2, 6	L	11, 12, 14, 15, 16				
12									HINGE, Door, Lower
	05127220AA	1	2, 6	L	11, 12, 14, 15, 16				Right
		1	2, 6	L	51, 52, 54, 55, 56				Right
		1	3, 7	L	12, 15, 16				Right
	05127221AA	1	2, 6	L	11, 12, 14, 15, 16				Left
		1	2, 6	L	51, 52, 54, 55, 56				Left
		1	3, 7	L	12, 15, 16				Left
13									SCREW
	05103781AA	4	2, 6	L	51, 52, 54, 55, 56				
		4	3, 7	L	12, 15, 16				
		4	2, 6	L	11, 12, 14, 15, 16				
14									PLUG, Door
	05125992AA	4	2, 6	L	11, 12, 14, 15, 16				
		4	2, 6	L	51, 52, 54, 55, 56				

SPRINTER (VA)

SERIES	LINE	BODY	ENGINE	TRANSMISSION
L = LOWLINE	3 = HD DODGE 2WD 6 = Lt. Duty DODGE 4WD 2 = Med. Duty DODGE 2WD 7 = Med. Duty DODGE 4WD	55 = Wagon 140" 54 = Wagon 118" 52 = Wagon 140" 51 = Wagon 118" 12 = Van 140" 11 = Van 118" 06 = Front Section 158" 14 = Van 118" 15 = Van 140" 16 = Van 158" 56 = Wagon 158" 01 = Chassis Forward Control 118" 02 = Chassis Forward Control 140"	EX8 = Engine-2.7L I5 Mercedes Turbo Diesel	DGJ = Transmission-5-Spd. Automatic,W5A580

Door, Front Shell And Hinges
Figure DVA-110

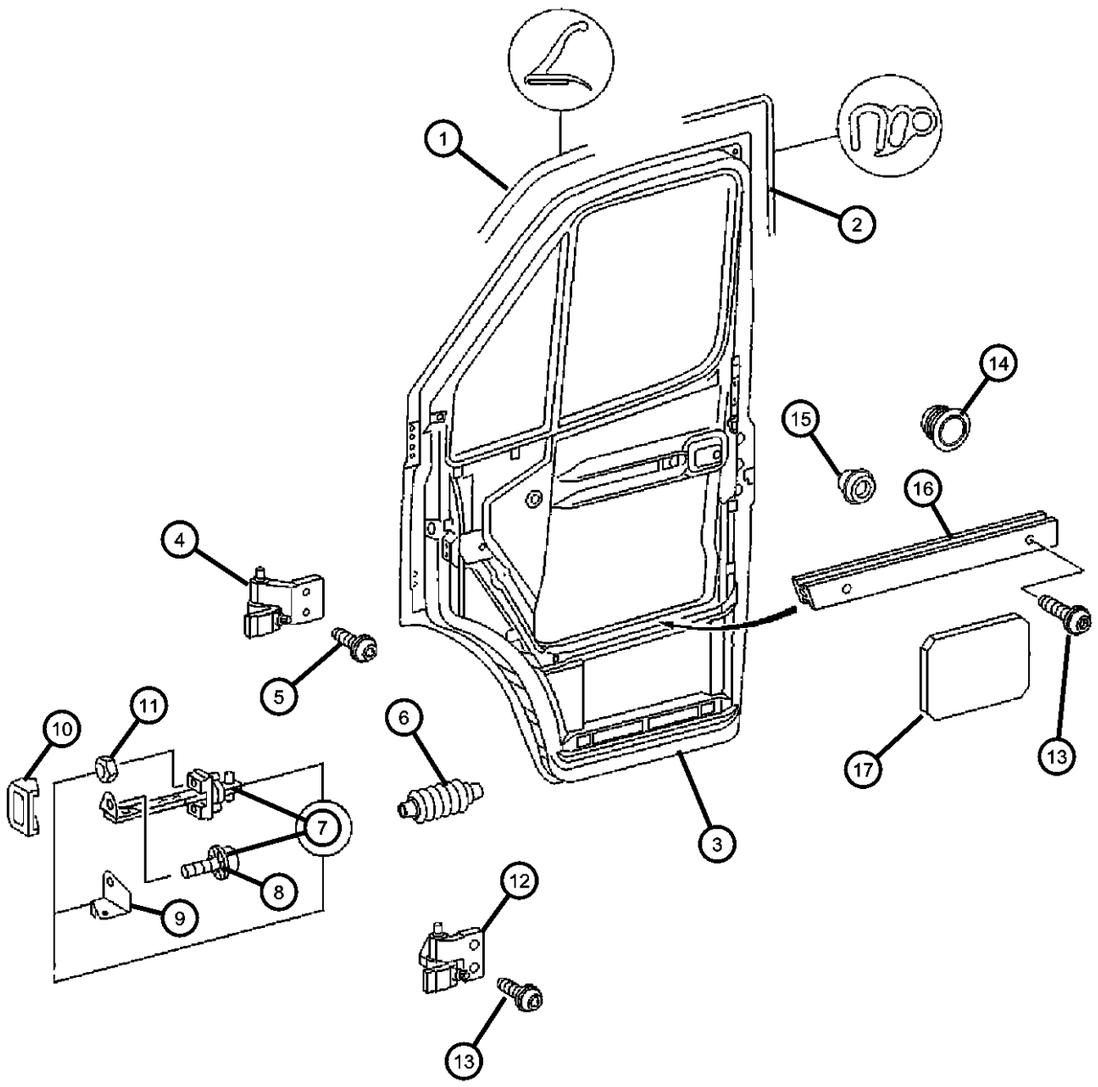

ITEM	PART NUMBER	QTY	LINE	SERIES	BODY	ENGINE	TRANS	TRIM	DESCRIPTION
		4	3, 7	L	12, 15, 16				
15									PLUG, Expansion
	05125514AA	4	2, 6	L	11, 12, 14, 15, 16				
		4	2, 6	L	51, 52, 54, 55, 56				
		4	3, 7	L	12, 15, 16				
	05133514AA	1	2, 6	L	01, 02, 06				
		1	3, 7	L	02, 06				
16									REINFORCEMENT, Door Inner
	05123683AA	1	2, 6	L	11, 12, 14, 15, 16				Left
		1	3, 7	L	12, 15, 16				Left
		1	2, 6	L	51, 52, 54, 55, 56				Left
	05123684AA	1	2, 6	L	51, 52, 54, 55, 56				Right
		1	2, 6	L	11, 12, 14, 15, 16				Right
		1	3, 7	L	12, 15, 16				Right
17									SHIELD, Door
	05122515AA	2	2, 6	L	01, 02, 06				
		2	2, 6	L	11, 12, 14, 15, 16				
		2	2, 6	L	51, 52, 54, 55, 56				
		2	3, 7	L	02, 06				
		2	3, 7	L	12, 15, 16				

SPRINTER (VA)

SERIES	LINE	BODY	ENGINE	TRANSMISSION
L = LOWLINE	3 = HD DODGE 2WD 6 = Lt. Duty DODGE 4WD 2 = Med. Duty DODGE 2WD 7 = Med. Duty DODGE 4WD	55 = Wagon 140" 54 = Wagon 118" 52 = Wagon 140" 51 = Wagon 118" 12 = Van 140" 11 = Van 118" 06 = Front Section 158" 14 = Van 118" 15 = Van 140" 16 = Van 158" 56 = Wagon 158" 01 = Chassis Forward Control 118" 02 = Chassis Forward Control 140"	EX8 = Engine-2.7L I5 Mercedes Turbo Diesel	DGJ = Transmission-5-Spd. Automatic,W5A580

Door, Front Glass And Regulator Handle
Figure DVA-120

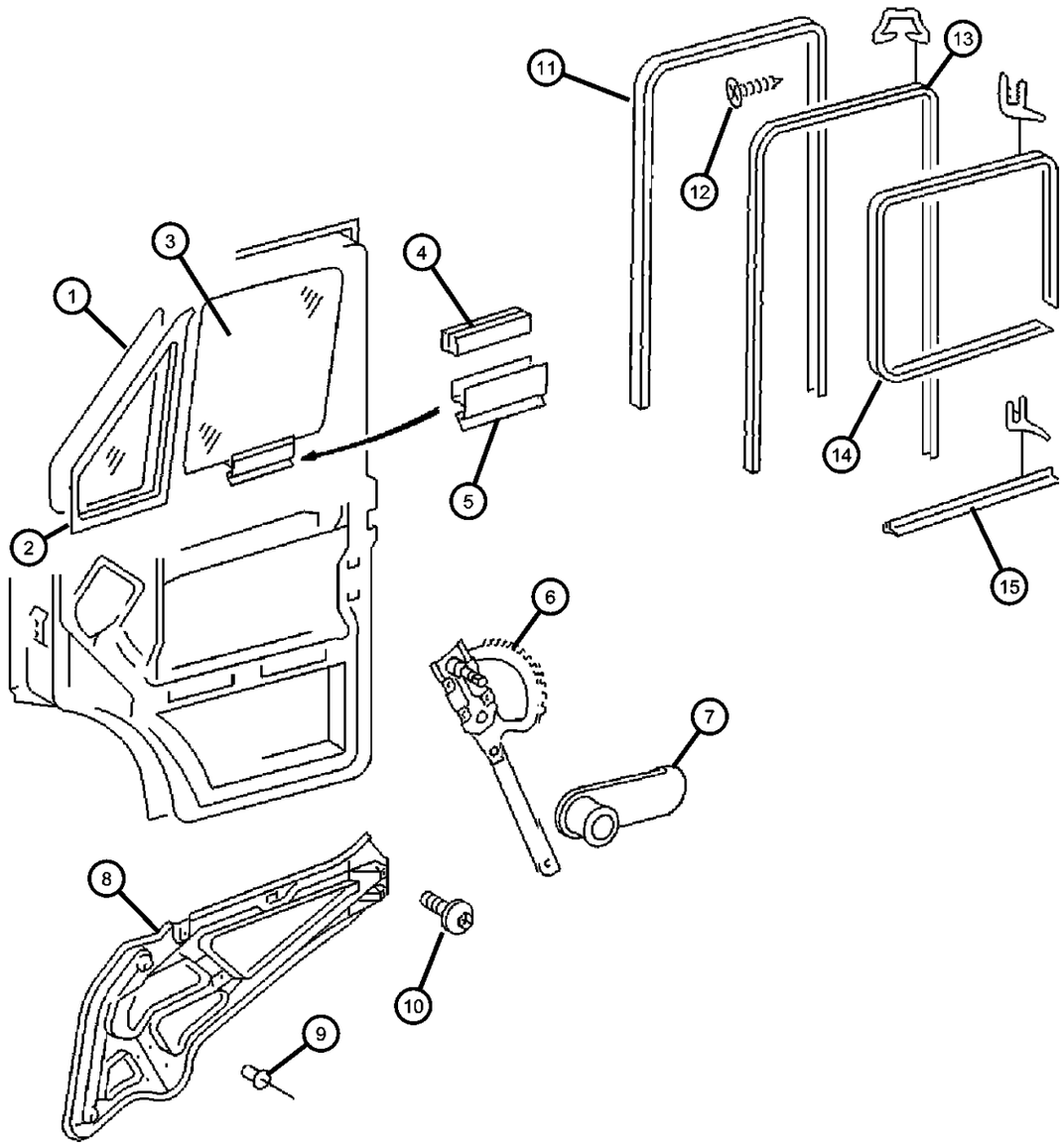

ITEM	PART NUMBER	QTY	LINE	SERIES	BODY	ENGINE	TRANS	TRIM	DESCRIPTION
1									GLASS, Front Door Vent
	05104352AA	1	2, 6	L	01, 02, 06				Left
		1	2, 6	L	11, 12, 14, 15, 16				Left
		1	2, 6	L	51, 52, 54, 55, 56				Left
		1	3, 7	L	02, 06				Left
		1	3, 7	L	12, 15, 16				Left
	05104353AA	1	2, 6	L	01, 02, 06				Right
		1	2, 6	L	11, 12, 14, 15, 16				Right
		1	2, 6	L	51, 52, 54, 55, 56				Right
		1	3, 7	L	02, 06				Right
		1	3, 7	L	12, 15, 16				Right
2									WEATHERSTRIP
	05104348AA	1	2, 6	L	11, 12, 14, 15, 16				Left
		1	2, 6	L	51, 52, 54, 55, 56				Left
		1	3, 7	L	12, 15, 16				Left
	05104350AA	1	2, 6	L	11, 12, 14, 15, 16				Right
		1	2, 6	L	51, 52, 54, 55, 56				Right
		1	3, 7	L	12, 15, 16				Right
3									GLASS, Front Door
	05104334AA	1	2, 6	L	01, 02, 06				Left
		1	2, 6	L	14, 15, 16, 11, 12				Left
		1	2, 6	L	51, 52, 54, 55, 56				Left
		1	3, 7	L	12, 15, 16				Left
	05104336AA	1	6, 2	L	01, 02, 06				Right

SPRINTER (VA)

SERIES	LINE	BODY	ENGINE	TRANSMISSION
L = LOWLINE	3 = HD DODGE 2WD 6 = Lt. Duty DODGE 4WD 2 = Med. Duty DODGE 2WD 7 = Med. Duty DODGE 4WD	55 = Wagon 140" 54 = Wagon 118" 52 = Wagon 140" 51 = Wagon 118" 12 = Van 140" 11 = Van 118" 06 = Front Section 158" 14 = Van 118" 15 = Van 140" 16 = Van 158" 56 = Wagon 158" 01 = Chassis Forward Control 118" 02 = Chassis Forward Control 140"	EX8 = Engine-2.7L I5 Mercedes Turbo Diesel	DGJ = Transmission-5-Spd. Automatic,W5A580

Door, Front Glass And Regulator Handle
Figure DVA-120

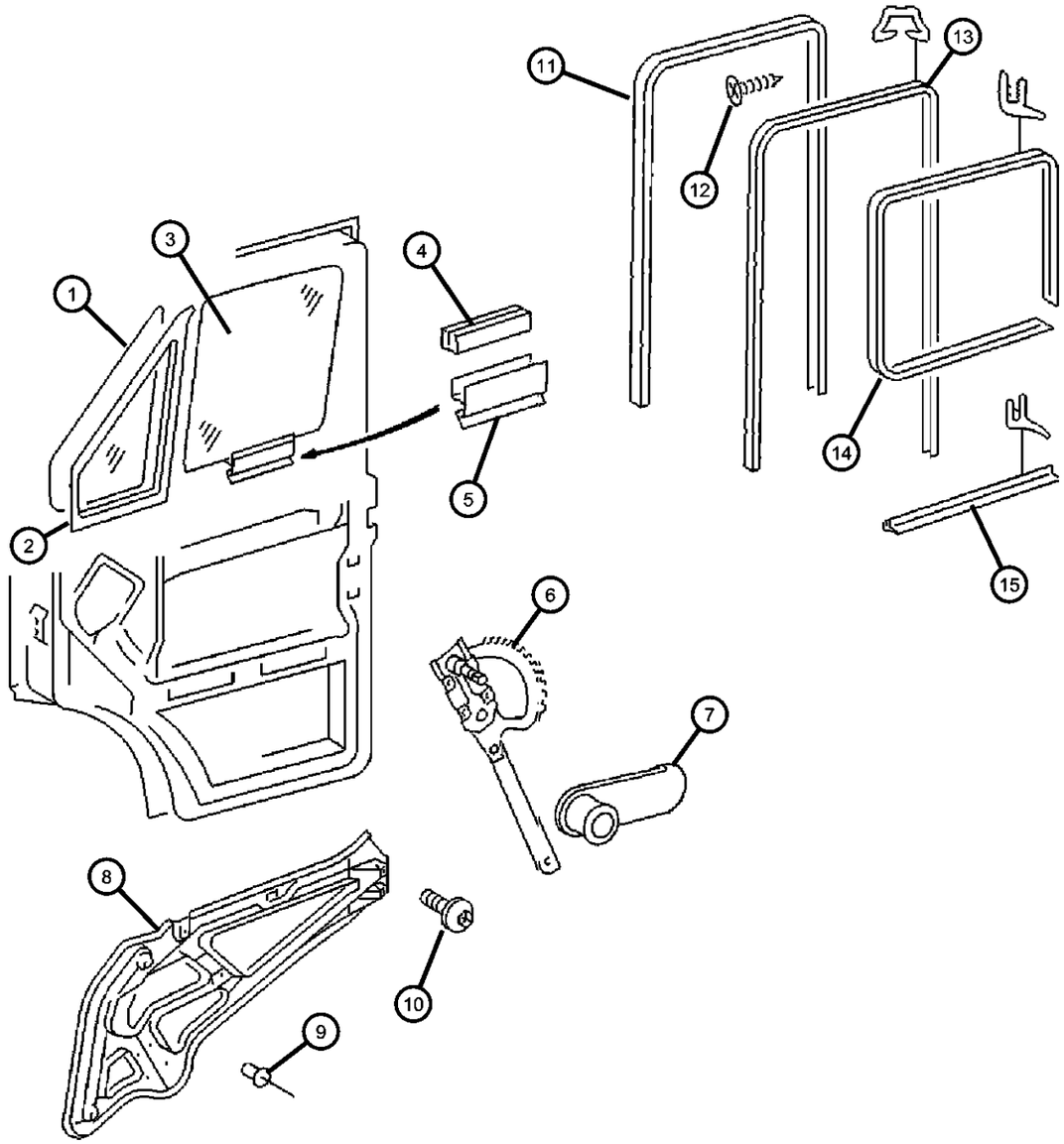

ITEM	PART NUMBER	QTY	LINE	SERIES	BODY	ENGINE	TRANS	TRIM	DESCRIPTION
		1	2, 6	L	11, 12, 14, 15, 16				Right
		1	2, 6	L	51, 52, 54, 55, 56				Right
		1	3, 7	L	12, 15, 16				Right
4									WEATHERSTRIP, Glass Channel Run
	05103783AA	1	2, 6	L	11, 12, 14, 15, 16				25 Meters Long
		1	2, 6	L	51, 52, 54, 55, 56				25 Meters Long
		1	3, 7	L	12, 15, 16				25 Meters Long
5									CHANNEL, Glass Run Lower
	05104029AA	1	2, 6	L	51, 52, 54, 55, 56				
		1	3, 7	L	12, 15, 16				
		1	2, 6	L	15, 16, 11, 12, 14				
6									REGULATOR, Front Door Window
	05104343AA	1	2, 6	L	11, 12, 14, 15, 16				Left
		1	2, 6	L	51, 52, 54, 55, 56				Left
		1	3, 7	L	12, 15, 16				Left
	05104345AA	1	2, 6	L	01, 02, 06				[JPA], Left
		1	2, 6	L	11, 12, 14, 15, 16				[JPA], Left
		1	2, 6	L	51, 52, 54, 55, 56				[JPA], Left
	05123727AA	1	2, 6	L	11, 12, 14, 15, 16				Right
		1	2, 6	L	54, 55, 56, 51, 52				Right
		1	3, 7	L	12, 15, 16				Right
	05104346AA	1	2, 6	L	01, 02, 06				[JPA], Right

SPRINTER (VA)

SERIES	LINE	BODY	ENGINE	TRANSMISSION
L = LOWLINE	3 = HD DODGE 2WD 6 = Lt. Duty DODGE 4WD 2 = Med. Duty DODGE 2WD 7 = Med. Duty DODGE 4WD	55 = Wagon 140" 54 = Wagon 118" 52 = Wagon 140" 51 = Wagon 118" 12 = Van 140" 11 = Van 118" 06 = Front Section 158" 14 = Van 118" 15 = Van 140" 16 = Van 158" 56 = Wagon 158" 01 = Chassis Forward Control 118" 02 = Chassis Forward Control 140"	EX8 = Engine-2.7L I5 Mercedes Turbo Diesel	DGJ = Transmission-5-Spd. Automatic,W5A580

Door, Front Glass And Regulator Handle
Figure DVA-120

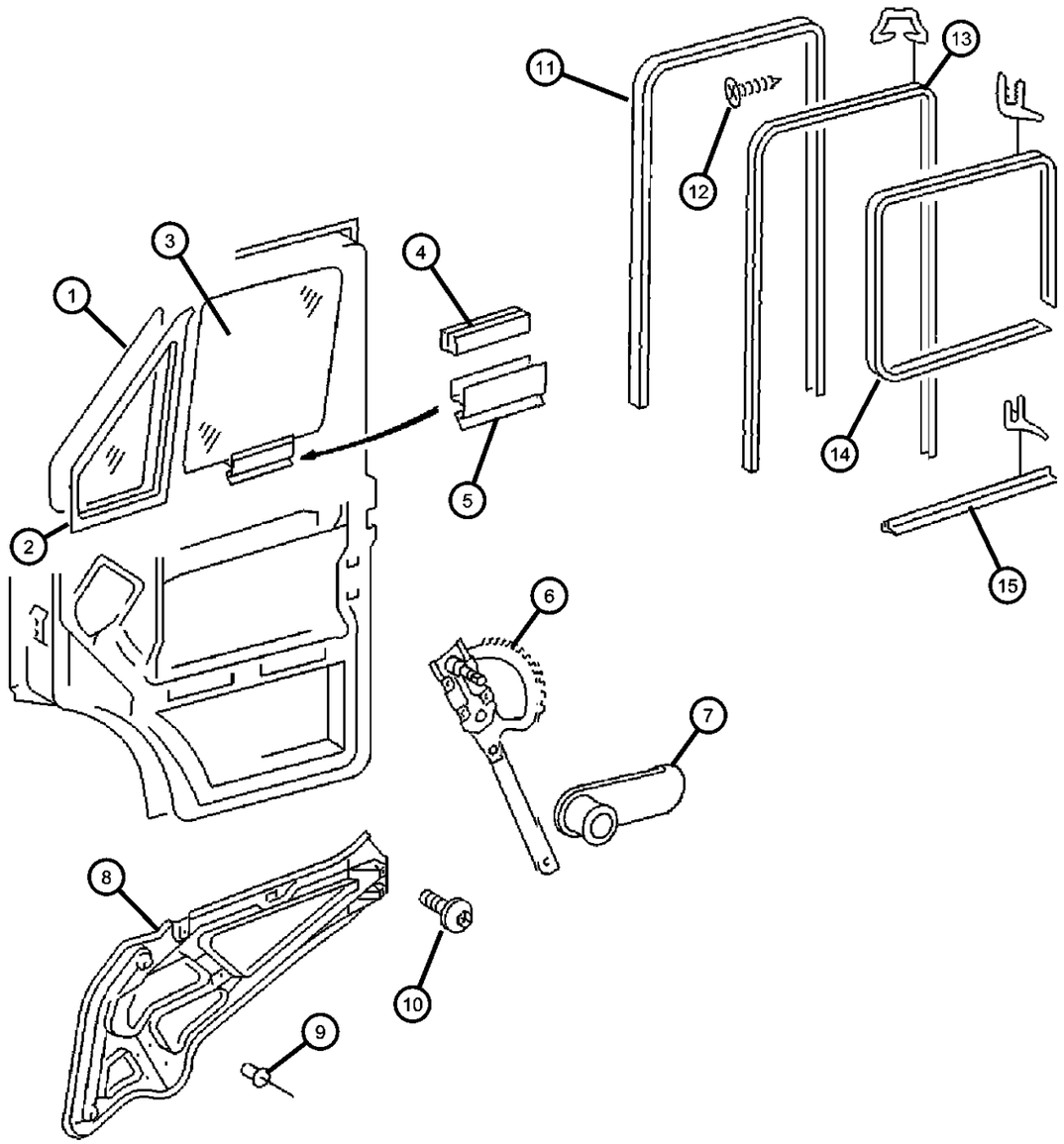

ITEM	PART NUMBER	QTY	LINE	SERIES	BODY	ENGINE	TRANS	TRIM	DESCRIPTION
		1	2, 6	L	11, 12, 14, 15, 16				[JPA], Right
		1	2, 6	L	51, 52, 54, 55, 56				[JPA], Right
7									HANDLE, Window Regulator
	1AR23CSSAA	1	2, 6	L	01, 02, 06				
		1	2, 6	L	11, 12, 14, 15, 16				
		1	2, 6	L	51, 52, 54, 55, 56				
		1	3, 7	L	02, 06				
		1	3, 7	L	12, 15, 16				
8									BRACKET, Door Inside
	05123685AA	1	2, 6	L	11, 12, 14, 15, 16				Left
		1	2, 6	L	51, 52, 54, 55, 56				Left
		1	3, 7	L	12, 15, 16				Left
	05123686AA	1	2, 6	L	11, 12, 14, 15, 16				Right
		1	2, 6	L	51, 52, 54, 55, 56				Right
		1	3, 7	L	12, 15, 16				Right
9									RIVET
	05103838AA	4	2, 6	L	11, 12, 14, 15, 16				
		4	3, 7	L	12, 15, 16				
		4	2, 6	L	52, 54, 55, 56, 51				
10									SCREW
	05125421AA	4	2, 6	L	11, 12, 14, 15, 16				
		4	2, 6	L	51, 52, 54, 55, 56				
		4	3, 7	L	12, 15, 16				

SPRINTER (VA)

SERIES	LINE	BODY	ENGINE	TRANSMISSION
L = LOWLINE	3 = HD DODGE 2WD 6 = Lt. Duty DODGE 4WD 2 = Med. Duty DODGE 2WD 7 = Med. Duty DODGE 4WD	55 = Wagon 140" 54 = Wagon 118" 52 = Wagon 140" 51 = Wagon 118" 12 = Van 140" 11 = Van 118" 06 = Front Section 158" 14 = Van 118" 15 = Van 140" 16 = Van 158" 56 = Wagon 158" 01 = Chassis Forward Control 118" 02 = Chassis Forward Control 140"	EX8 = Engine-2.7L I5 Mercedes Turbo Diesel	DGJ = Transmission-5-Spd. Automatic,W5A580

AR = use ase required - = Non illustrrated part

Door, Front Glass And Regulator Handle
Figure DVA-120

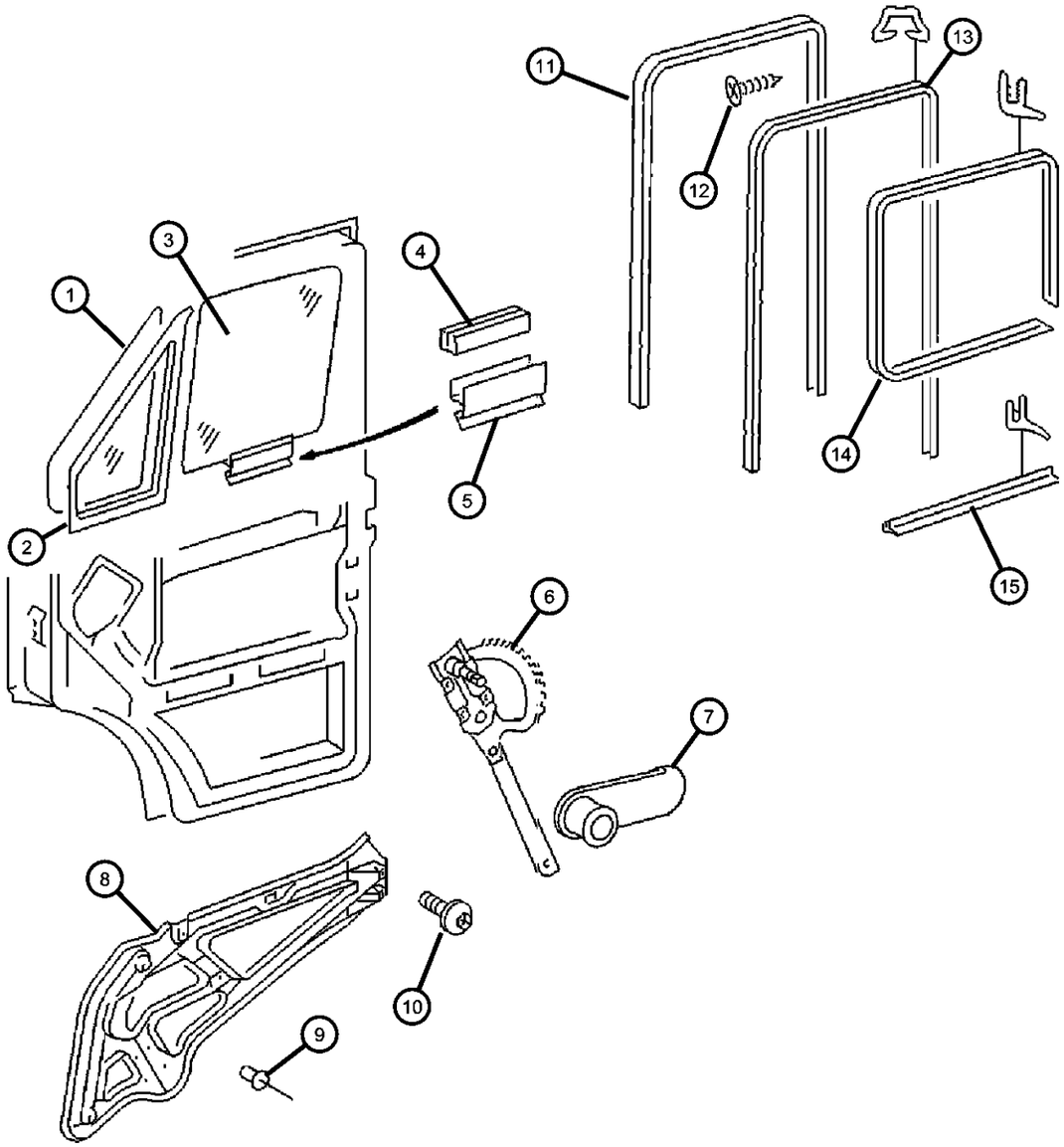

ITEM	PART NUMBER	QTY	LINE	SERIES	BODY	ENGINE	TRANS	TRIM	DESCRIPTION
11									FRAME, Door Glass
	05104351AA	1	2, 6	L	11, 12, 14, 15, 16				Right
		1	2, 6	L	51, 52, 54, 55, 56				Right
		1	3, 7	L	12, 15, 16				Right
	05123785AA	1	2, 6	L	11, 12, 14, 15, 16				Left
		1	2, 6	L	51, 52, 54, 55, 56				Left
		1	3, 7	L	12, 15, 16				Left
12									SCREW, Tapping
	05133513AA	8	2, 6	L	51, 52, 54, 55, 56				
		8	3, 7	L	12, 15, 16				
		8	2, 6	L	11, 12, 14, 15, 16				
13									WEATHERSTRIP, Glass Channel Run
	05123782AA	1	2, 6	L	11, 12, 14, 15, 16				
		1	2, 6	L	51, 52, 54, 55, 56				
		1	3, 7	L	12, 15, 16				
14									WEATHERSTRIP, Front Door
	05123780AA	1	2, 6	L	11, 12, 14, 15, 16				
		1	2, 6	L	51, 52, 54, 55, 56				
		1	3, 7	L	12, 15, 16				
15									WEATHERSTRIP, Sill Front Secondary
	05123775AA	1	2, 6	L	11, 12, 14, 15, 16				

SPRINTER (VA)

SERIES	LINE	BODY	ENGINE	TRANSMISSION
L = LOWLINE	3 = HD DODGE 2WD 6 = Lt. Duty DODGE 4WD 2 = Med. Duty DODGE 2WD 7 = Med. Duty DODGE 4WD	55 = Wagon 140" 54 = Wagon 118" 52 = Wagon 140" 51 = Wagon 118" 12 = Van 140" 11 = Van 118" 06 = Front Section 158" 14 = Van 118" 15 = Van 140" 16 = Van 158" 56 = Wagon 158" 01 = Chassis Forward Control 118" 02 = Chassis Forward Control 140"	EX8 = Engine-2.7L I5 Mercedes Turbo Diesel	DGJ = Transmission-5-Spd. Automatic,W5A580

Door, Front Glass And Regulator Handle
Figure DVA-120

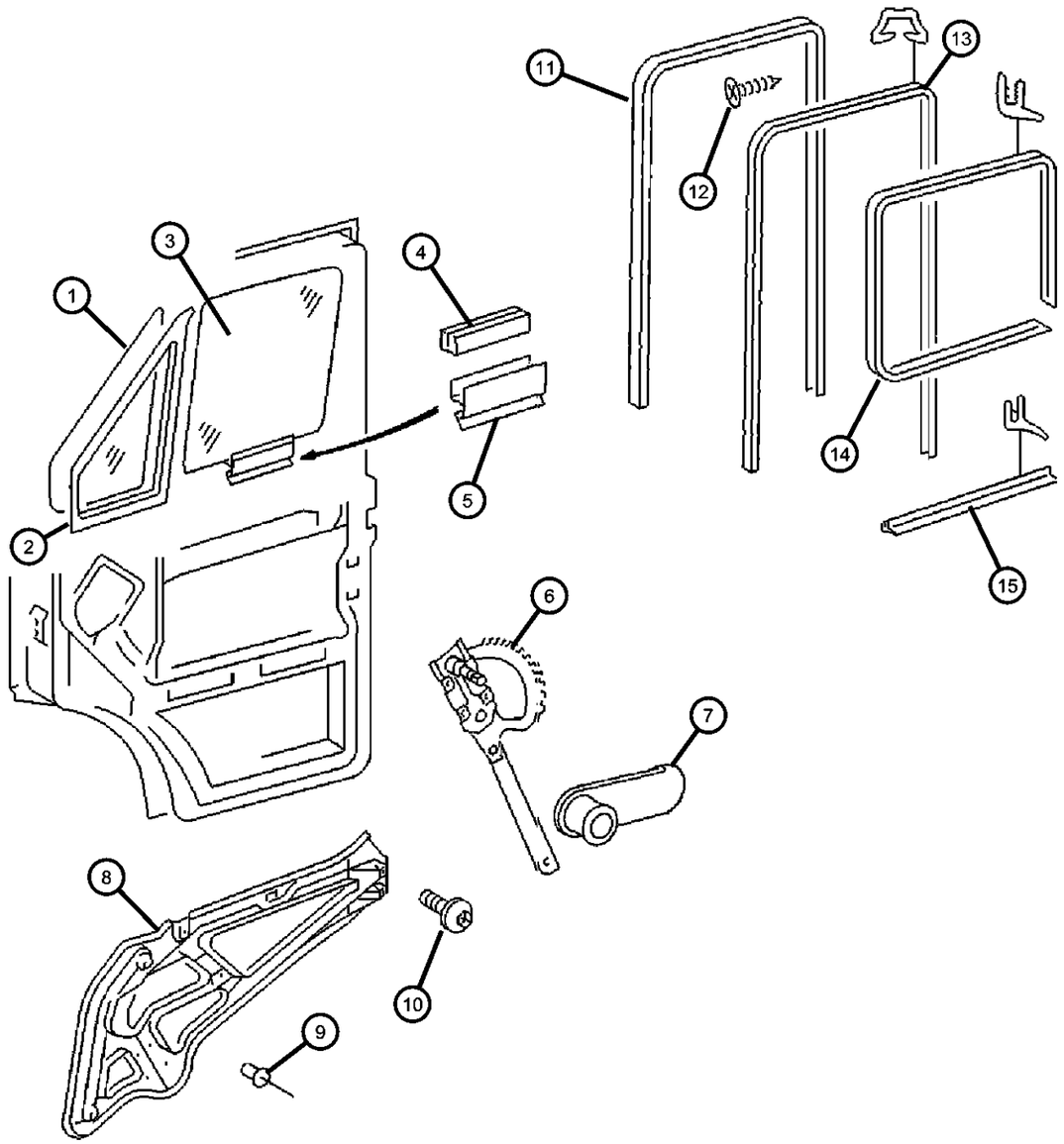

ITEM	PART NUMBER	QTY	LINE	SERIES	BODY	ENGINE	TRANS	TRIM	DESCRIPTION
		1	2, 6	L	51, 52, 54, 55, 56				
		1	3, 7	L	12, 15, 16				

SPRINTER (VA)

SERIES	LINE	BODY	ENGINE	TRANSMISSION
L = LOWLINE	3 = HD DODGE 2WD 6 = Lt. Duty DODGE 4WD 2 = Med. Duty DODGE 2WD 7 = Med. Duty DODGE 4WD	55 = Wagon 140" 54 = Wagon 118" 52 = Wagon 140" 51 = Wagon 118" 12 = Van 140" 11 = Van 118" 06 = Front Section 158" 14 = Van 118" 15 = Van 140" 16 = Van 158" 56 = Wagon 158" 01 = Chassis Forward Control 118" 02 = Chassis Forward Control 140"	EX8 = Engine-2.7L I5 Mercedes Turbo Diesel	DGJ = Transmission-5-Spd. Automatic,W5A580

AR = use ase required - = Non illustrrated part

Door, Front Exterior Handle And Links
Figure DVA-130

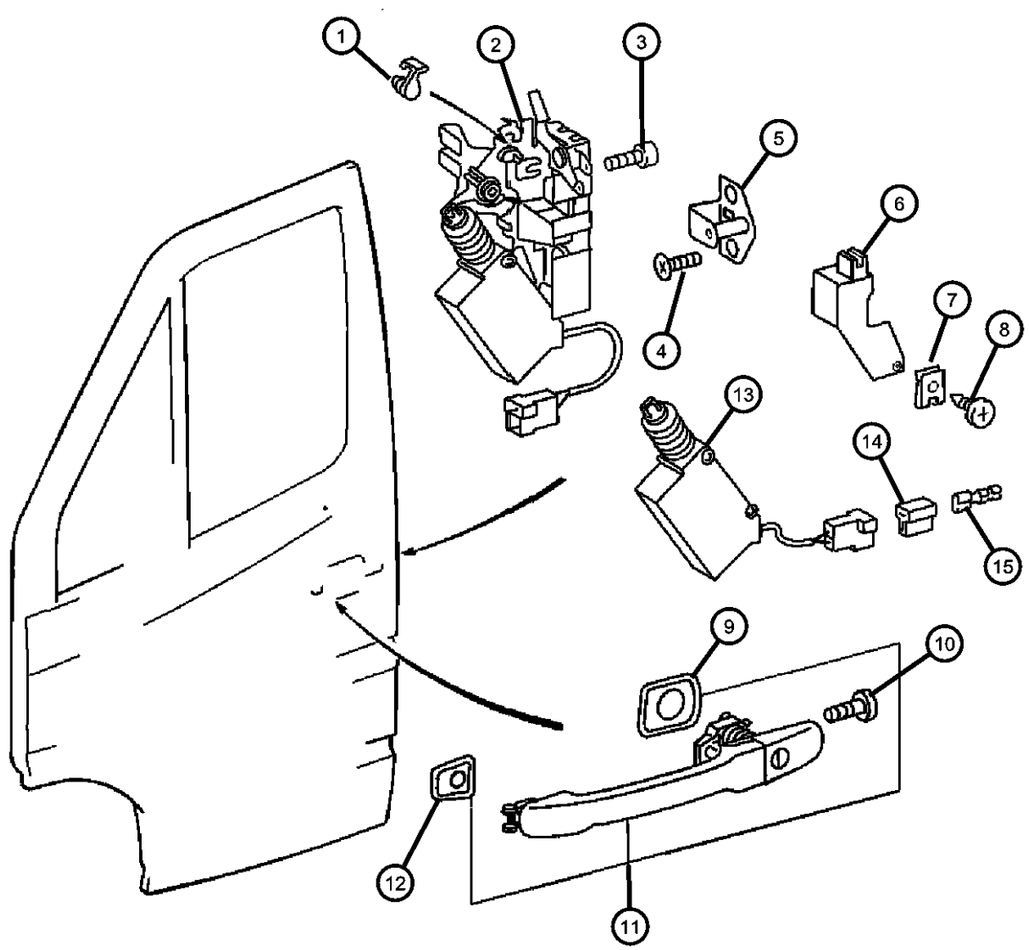

ITEM	PART NUMBER	QTY	LINE	SERIES	BODY	ENGINE	TRANS	TRIM	DESCRIPTION
1									CONNECTOR, Solenoid
	05103674AA	1	2, 6	L	11, 12, 14, 15, 16				
		1	2, 6	L	51, 52, 54, 55, 56				
		1	3, 7	L	12, 15, 16				
2									LATCH, Front Door
	05104337AA	1	2, 6	L	11, 12, 14, 15, 16				Left
		1	2, 6	L	51, 52, 54, 55, 56				Left
	05104341AA	1	3, 7	L	12, 15, 16				Right
		1	3, 7	L	12, 15, 16				Left
		1	2, 6	L	11, 12, 14, 15, 16				Right
		1	2, 6	L	51, 52, 54, 55, 56				Right
3									SCREW
	05103723AA	3	3, 7	L	12, 15, 16				
		3	2, 6	L	11, 12, 14, 15, 16				
		3	2, 6	L	51, 52, 54, 55, 56				
4									SCREW
	05103715AA	2	2, 6	L	11, 12, 14, 15, 16				
		2	2, 6	L	51, 52, 54, 55, 56				
		2	3, 7	L	12, 15, 16				
5									STRIKER
	05104330AA	1	2, 6	L	51, 52, 54, 55, 56				
		1	2, 6	L	11, 12, 14, 15, 16				
		1	3, 7	L	12, 15, 16				

SPRINTER (VA)

SERIES	LINE	BODY	ENGINE	TRANSMISSION
L = LOWLINE	3 = HD DODGE 2WD 6 = Lt. Duty DODGE 4WD 2 = Med. Duty DODGE 2WD 7 = Med. Duty DODGE 4WD	55 = Wagon 140" 54 = Wagon 118" 52 = Wagon 140" 51 = Wagon 118" 12 = Van 140" 11 = Van 118" 06 = Front Section 158" 14 = Van 118" 15 = Van 140" 16 = Van 158" 56 = Wagon 158" 01 = Chassis Forward Control 118" 02 = Chassis Forward Control 140"	EX8 = Engine-2.7L I5 Mercedes Turbo Diesel	DGJ = Transmission-5-Spd. Automatic,W5A580

Door, Front Exterior Handle And Links
Figure DVA-130

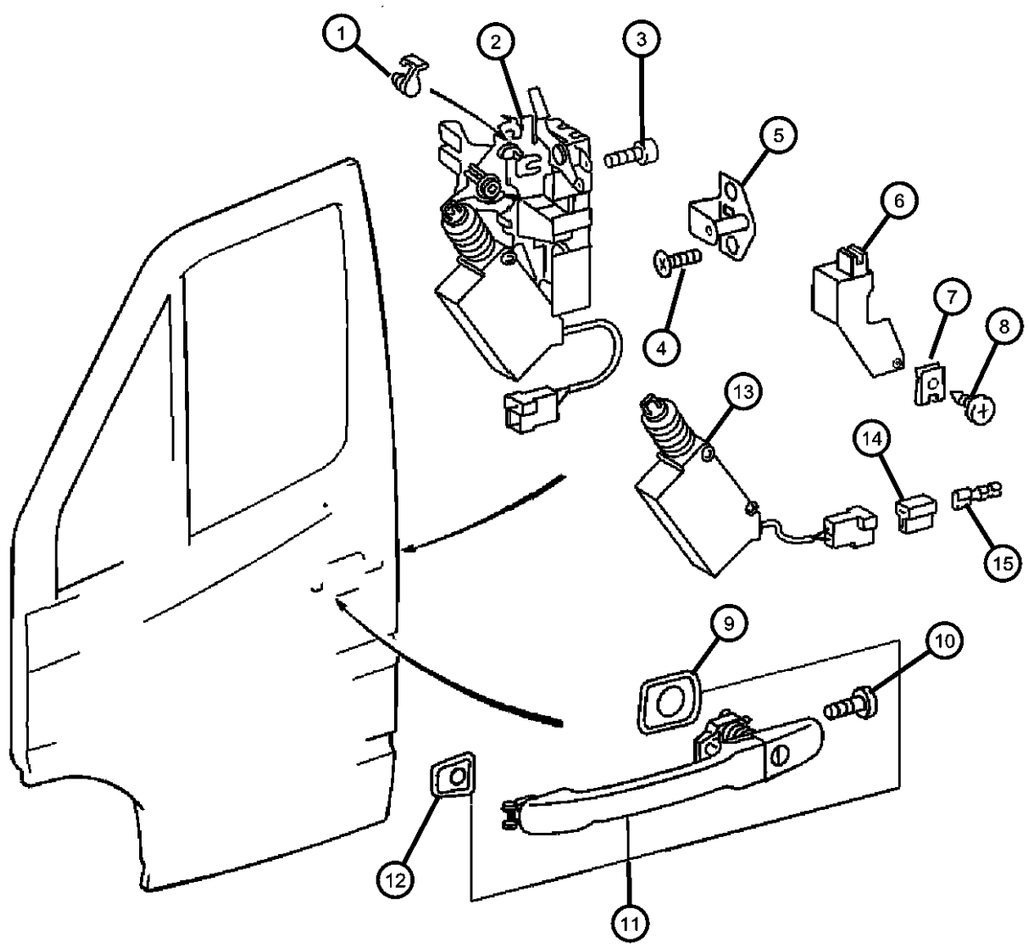

ITEM	PART NUMBER	QTY	LINE	SERIES	BODY	ENGINE	TRANS	TRIM	DESCRIPTION
6									COVER, Lock Housing
	05123764AA	1	2, 6	L	11, 12, 14, 15, 16				
		1	2, 6	L	56, 51, 52, 54, 55				
		1	3, 7	L	12, 15, 16				
7									CLIP, U Type
	05125858AA	1	2, 6	L	11, 12, 14, 15, 16				
		1	2, 6	L	51, 52, 54, 55, 56				
		1	3, 7	L	12, 15, 16				
8	05126095AA	6	2, 6	L	11, 12, 14, 15, 16				SCREW, Tapping
9									PAD
	05103673AA	1	2, 6	L	11, 12, 14, 15, 16				
		1	2, 6	L	51, 52, 54, 55, 56				
		1	3, 7	L	12, 15, 16				
10									SCREW, Front Door Handle
	05125414AA	1	2, 6	L	11, 12, 14, 15, 16				
		1	2, 6	L	51, 52, 54, 55, 56				
		1	3, 7	L	12, 15, 16				
11									HANDLE, Front Door
	05124094AA	1	2, 6	L	51, 52, 54, 55, 56				Right & Left
		1	3, 7	L	12, 15, 16				Right & Left
		1	2, 6	L	11, 12, 14, 15, 16				Right & Left
12									PAD
	05103672AA	1	2, 6	L	11, 12, 14, 15, 16				

SPRINTER (VA)

SERIES	LINE	BODY	ENGINE	TRANSMISSION
L = LOWLINE	3 = HD DODGE 2WD 6 = Lt. Duty DODGE 4WD 2 = Med. Duty DODGE 2WD 7 = Med. Duty DODGE 4WD	55 = Wagon 140" 54 = Wagon 118" 52 = Wagon 140" 51 = Wagon 118" 12 = Van 140" 11 = Van 118" 06 = Front Section 158" 14 = Van 118" 15 = Van 140" 16 = Van 158" 56 = Wagon 158" 01 = Chassis Forward Control 118" 02 = Chassis Forward Control 140"	EX8 = Engine-2.7L I5 Mercedes Turbo Diesel	DGJ = Transmission-5-Spd. Automatic,W5A580

Door, Front Exterior Handle And Links
Figure DVA-130

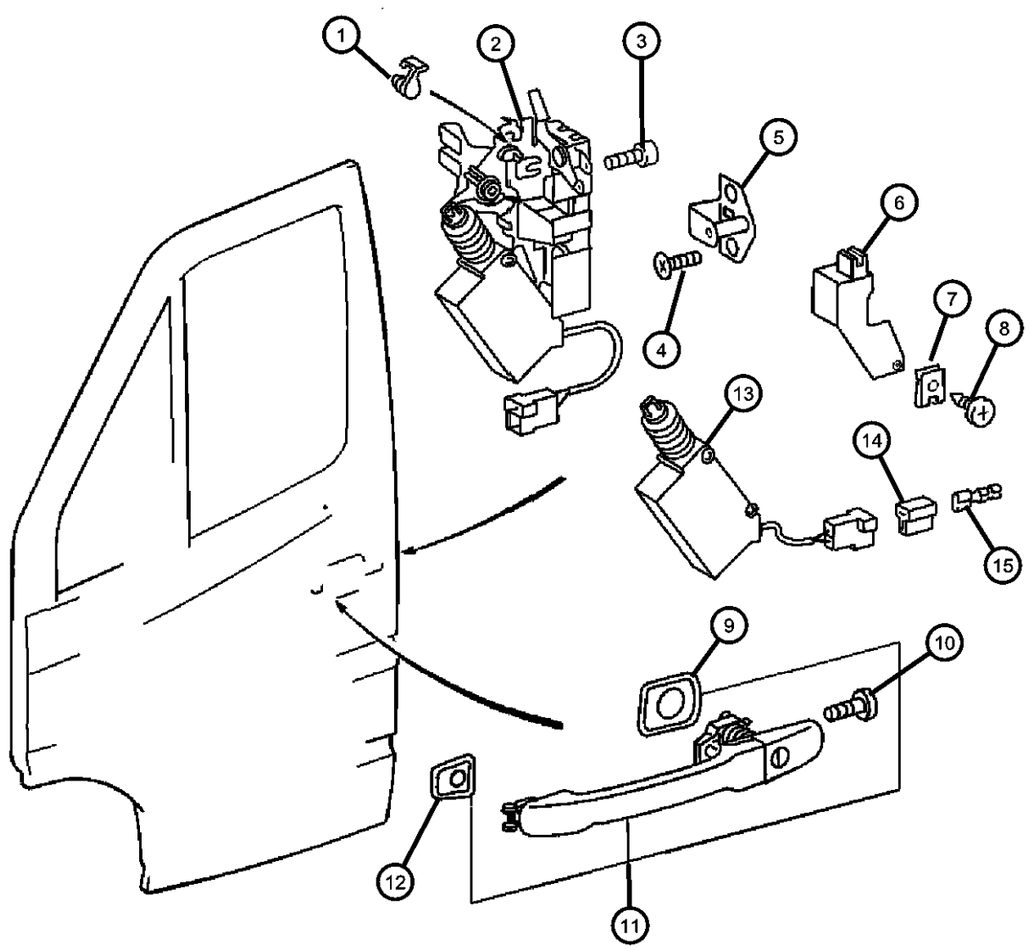

ITEM	PART NUMBER	QTY	LINE	SERIES	BODY	ENGINE	TRANS	TRIM	DESCRIPTION
		1	2, 6	L	51, 52, 54, 55, 56				
		1	3, 7	L	12, 15, 16				
13									ACTUATOR, Power Door Lock
	05133510AA	1	2, 6	L	01, 02, 06				With Convenience Locking System, Right
		1	2, 6	L	11, 12, 14, 15, 16				With Convenience Locking System, Right
	05133512AA	1	2, 6	L	01, 02, 06				Without Convenience Locking System, Right
		1	2, 6	L	11, 12, 14, 15, 16				Without Convenience Locking System, Right
		1	2, 6	L	51, 52, 54, 55, 56				With Convenience Locking System, Right
		1	3, 7	L	12, 15, 16				With Convenience Locking System, Right
	05133511AA	1	2, 6	L	01, 02, 06				With Convenience Locking System, Left
		1	2, 6	L	11, 12, 14, 15, 16				With Convenience Locking System, Left
		1	2, 6	L	51, 52, 54, 55, 56				With Convenience Locking System, Left
		1	3, 7	L	12, 15, 16				With Convenience Locking System, Left
		1	2, 6	L	51, 52, 54, 55, 56				Without Convenience Locking System, Right
		1	3, 7	L	12, 15, 16				Without Convenience Locking System, Right
	05133986AA	1	2, 6	L	06, 01, 02				Without Convenience Locking System, Left
		1	2, 6	L	11, 12, 14, 15, 16				Without Convenience Locking System, Left
		1	2, 6	L	51, 52, 54, 55, 56				Without Convenience Locking System, Left
		1	3, 7	L	12, 15, 16				Without Convenience Locking System, Left
14									INSULATOR, 2 Way Female

SPRINTER (VA)

SERIES	LINE	BODY	ENGINE	TRANSMISSION
L = LOWLINE	3 = HD DODGE 2WD 6 = Lt. Duty DODGE 4WD 2 = Med. Duty DODGE 2WD 7 = Med. Duty DODGE 4WD	55 = Wagon 140" 54 = Wagon 118" 52 = Wagon 140" 51 = Wagon 118" 12 = Van 140" 11 = Van 118" 06 = Front Section 158" 14 = Van 118" 15 = Van 140" 16 = Van 158" 56 = Wagon 158" 01 = Chassis Forward Control 118" 02 = Chassis Forward Control 140"	EX8 = Engine-2.7L I5 Mercedes Turbo Diesel	DGJ = Transmission-5-Spd. Automatic,W5A580

Door, Front Exterior Handle And Links
Figure DVA-130

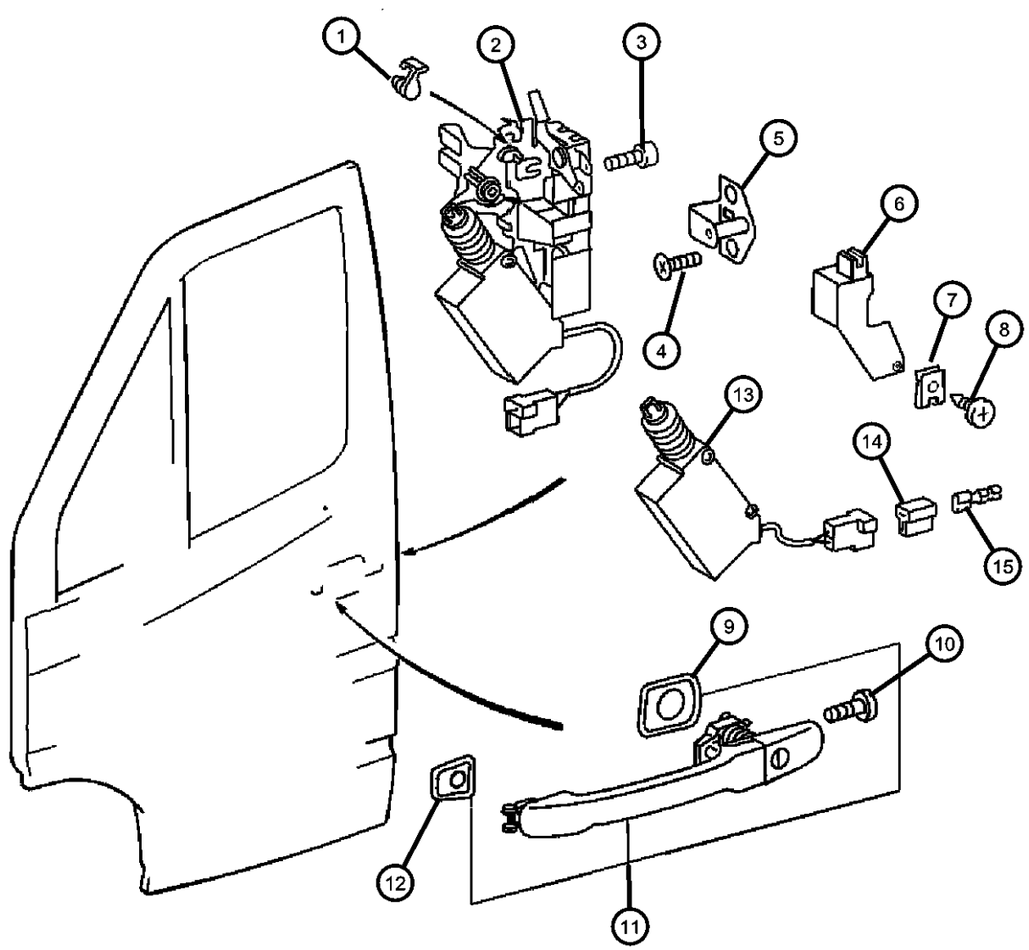

ITEM	PART NUMBER	QTY	LINE	SERIES	BODY	ENGINE	TRANS	TRIM	DESCRIPTION
	05103754AA	1	2, 6	L	11, 12, 14, 15, 16				
		1	3, 7	L	12, 15, 16				
		1	2, 6	L	51, 52, 54, 55, 56				
15									TERMINAL, Female
	05114451AA	99	2, 6	L	11, 12, 14, 15, 16				
		99	2, 6	L	51, 52, 54, 55, 56				
		99	2, 6	L	01, 02, 06				
		99	3, 7	L	12, 15, 16				

SPRINTER (VA)

SERIES	LINE	BODY	ENGINE	TRANSMISSION
L = LOWLINE	3 = HD DODGE 2WD 6 = Lt. Duty DODGE 4WD 2 = Med. Duty DODGE 2WD 7 = Med. Duty DODGE 4WD	55 = Wagon 140" 54 = Wagon 118" 52 = Wagon 140" 51 = Wagon 118" 12 = Van 140" 11 = Van 118" 06 = Front Section 158" 14 = Van 118" 15 = Van 140" 16 = Van 158" 56 = Wagon 158" 01 = Chassis Forward Control 118" 02 = Chassis Forward Control 140"	EX8 = Engine-2.7L I5 Mercedes Turbo Diesel	DGJ = Transmission-5-Spd. Automatic,W5A580

Door, Sliding Cargo Glass
Figure DVA-320

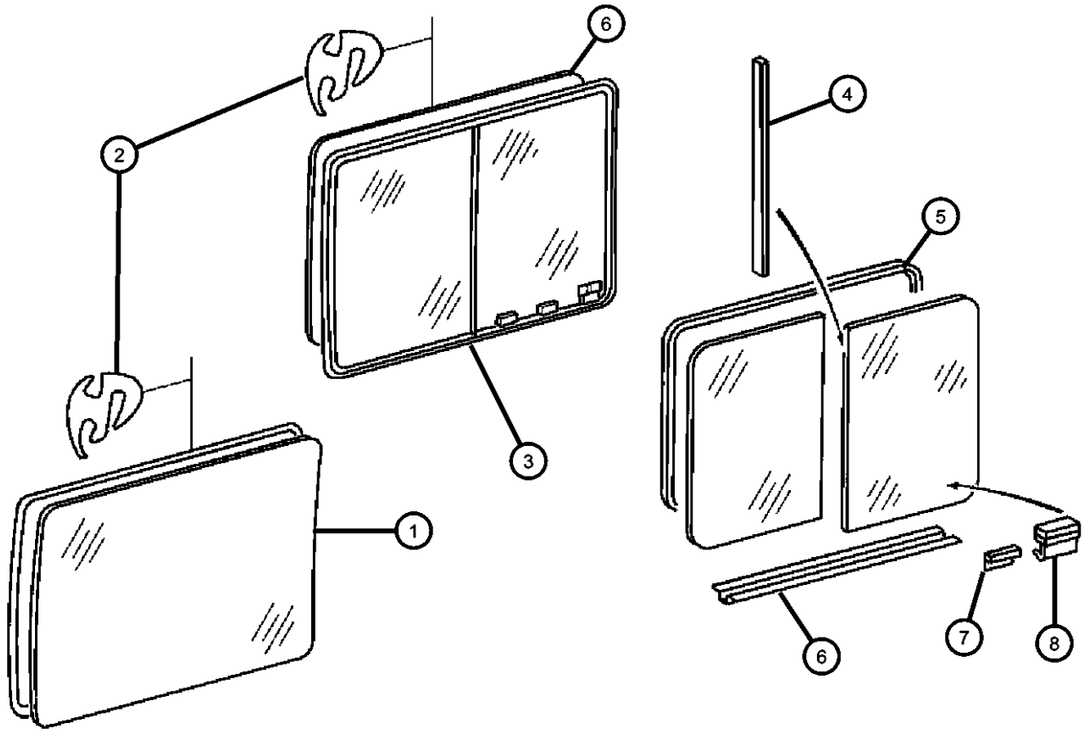

ITEM	PART NUMBER	QTY	LINE	SERIES	BODY	ENGINE	TRANS	TRIM	DESCRIPTION
1									GLASS, Side Cargo Door, Fixed
	05104363AA	1	2, 6	L	11, 12, 14, 15, 16				[3FQ]
		1	2, 6	L	51, 52, 54, 55, 56				[3FQ]
		1	3, 7	L	12, 15, 16				[3FQ]
2									WEATHERSTRIP, Sliding Door Glass
	05104364AA	1	2, 6	L	11, 12, 14, 15, 16				
		1	3, 7	L	12, 15, 16				
		1	2, 6	L	51, 52, 54, 55, 56				
3									GLASS, Sliding Door, Vented
	05123832AA	1	2, 6	L	11, 12, 14, 15, 16				[3FQ], Left
		1	2, 6	L	51, 52, 54, 55, 56				[3FQ], Left
		1	3, 7	L	12, 15, 16				[3FQ], Left
	05123834AA	1	2, 6	L	11, 12, 14, 15, 16				[3FQ], Right
		1	2, 6	L	51, 52, 54, 55, 56				[3FQ], Right
		1	3, 7	L	12, 15, 16				[3FQ], Right
4									WEATHERSTRIP, Side Panel Vent
	05133536AA	1	2, 6	L	11, 12, 14, 15, 16				
		1	2, 6	L	51, 52, 54, 55, 56				
		1	3, 7	L	12, 15, 16				
5									WEATHERSTRIP, Side Panel Vent
	05133533AA	1	2, 6	L	11, 12, 14, 15, 16				Right
		1	2, 6	L	51, 52, 54, 55, 56				Right
		1	3, 7	L	12, 15, 16				Right

SPRINTER (VA)

SERIES	LINE	BODY	ENGINE	TRANSMISSION
L = LOWLINE	3 = HD DODGE 2WD 6 = Lt. Duty DODGE 4WD 2 = Med. Duty DODGE 2WD 7 = Med. Duty DODGE 4WD	55 = Wagon 140" 54 = Wagon 118" 52 = Wagon 140" 51 = Wagon 118" 12 = Van 140" 11 = Van 118" 06 = Front Section 158" 14 = Van 118" 15 = Van 140" 16 = Van 158" 56 = Wagon 158" 01 = Chassis Forward Control 118" 02 = Chassis Forward Control 140"	EX8 = Engine-2.7L I5 Mercedes Turbo Diesel	DGJ = Transmission-5-Spd. Automatic,W5A580

Door, Sliding Cargo Glass
Figure DVA-320

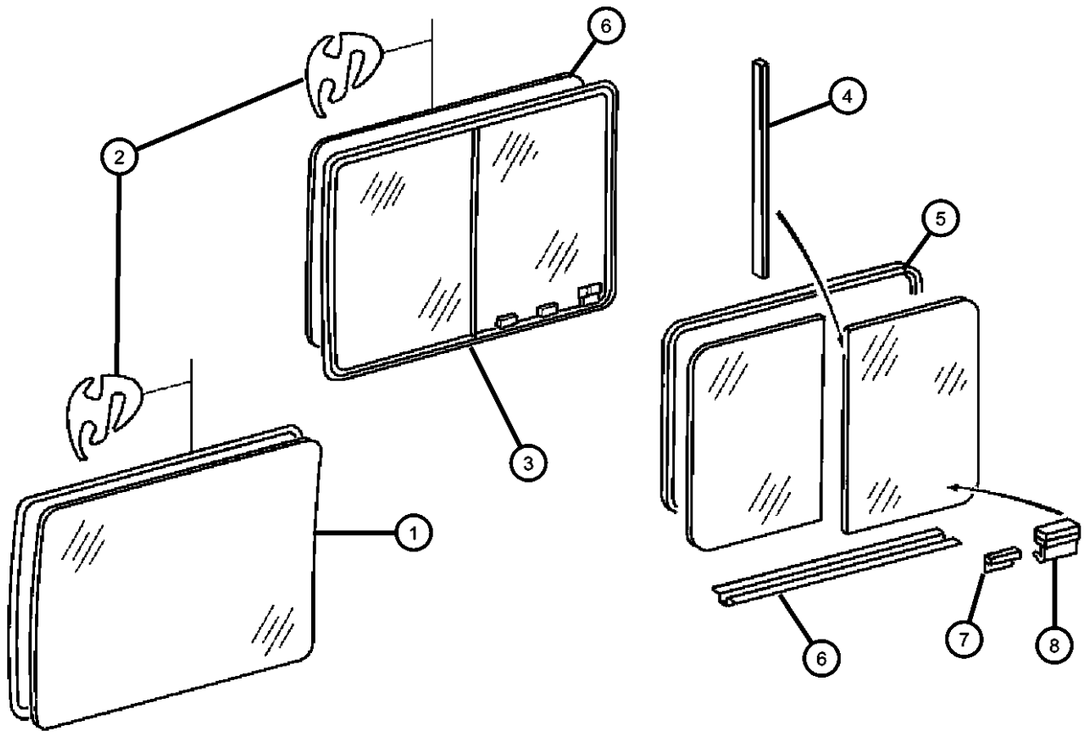

ITEM	PART NUMBER	QTY	LINE	SERIES	BODY	ENGINE	TRANS	TRIM	DESCRIPTION
6									WEATHERSTRIP, Glass Channel Run
	05133537AA	1	6, 2	L	11, 12, 14, 15, 16				
		1	2, 6	L	51, 52, 54, 55, 56				
		1	3, 7	L	12, 15, 16				
7									RETAINER, Side Panel Vent Window
	05133535AA	3	2, 6	L	11, 12, 14, 15, 16				
		1	2, 6	L	51, 52, 54, 55, 56				
		1	3, 7	L	12, 15, 16				
8									WEATHERSTRIP, Side Panel Vent
	05133536AA	1	2, 6	L	11, 12, 14, 15, 16				
		1	2, 6	L	51, 52, 54, 55, 56				
		1	3, 7	L	12, 15, 16				

SPRINTER (VA)

SERIES	LINE	BODY	ENGINE	TRANSMISSION
L = LOWLINE	3 = HD DODGE 2WD 6 = Lt. Duty DODGE 4WD 2 = Med. Duty DODGE 2WD 7 = Med. Duty DODGE 4WD	55 = Wagon 140" 54 = Wagon 118" 52 = Wagon 140" 51 = Wagon 118" 12 = Van 140" 11 = Van 118" 06 = Front Section 158" 14 = Van 118" 15 = Van 140" 16 = Van 158" 56 = Wagon 158" 01 = Chassis Forward Control 118" 02 = Chassis Forward Control 140"	EX8 = Engine-2.7L I5 Mercedes Turbo Diesel	DGJ = Transmission-5-Spd. Automatic,W5A580

Door, Sliding Cargo Lock And Controls
Figure DVA-330

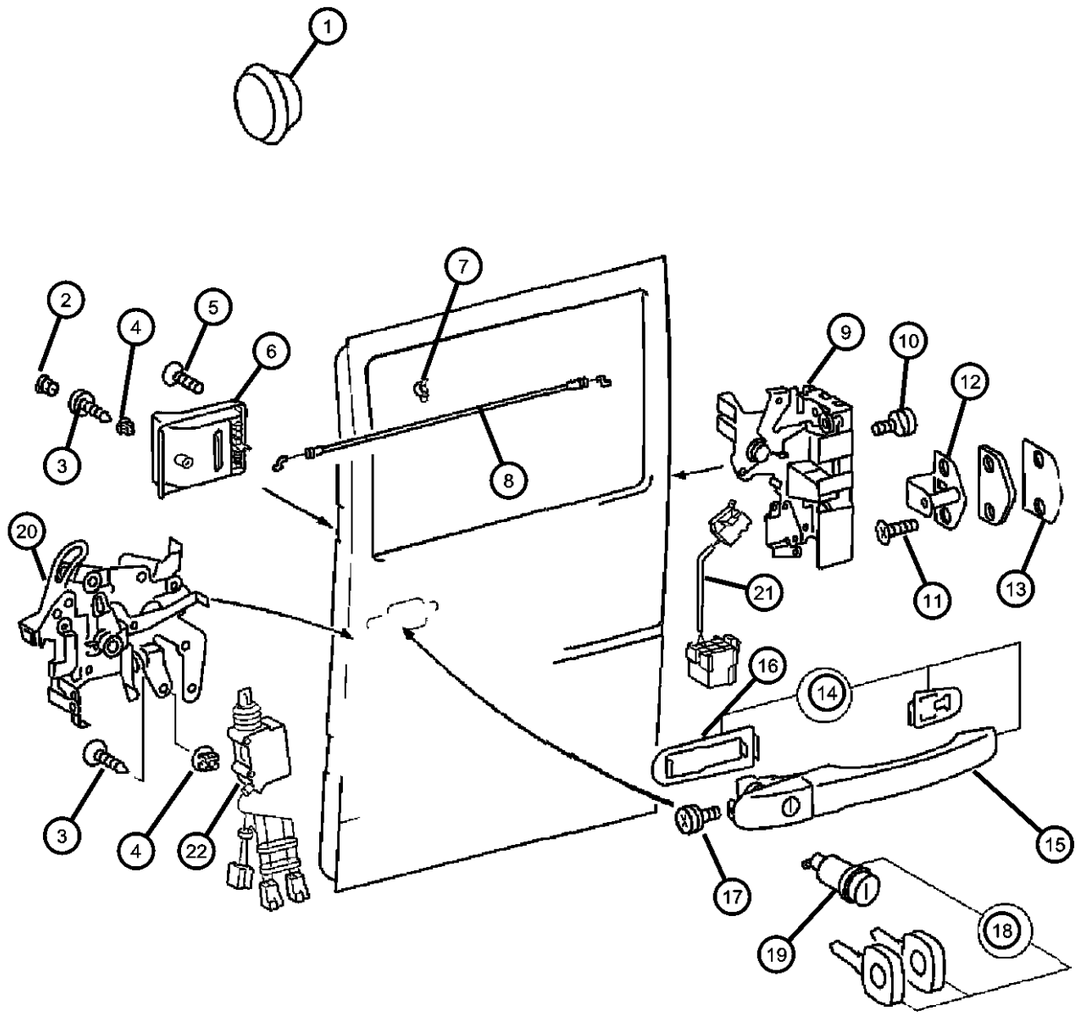

ITEM	PART NUMBER	QTY	LINE	SERIES	BODY	ENGINE	TRANS	TRIM	DESCRIPTION
1									PLUG, Door
	05125508AA	1	2, 6	L	51, 52, 54, 55, 56				
		1	3, 7	L	12, 15, 16				
		1	2, 6	L	11, 12, 14, 15, 16				
2									CAP, Door Handle Screw Cover
	0ZF54DX9AA	1	2, 6	L	11, 12, 14, 15, 16				
		1	2, 6	L	51, 52, 54, 55, 56				
		1	3, 7	L	12, 15, 16				
3									SCREW
	05104632AA	2	2, 6	L	54, 55, 56, 51, 52				
		2	3, 7	L	12, 15, 16				
		2	2, 6	L	11, 12, 14, 15, 16				
4									NUT
	05125862AA	2	2, 6	L	11, 12, 14, 15, 16				
		2	2, 6	L	51, 52, 54, 55, 56				
		2	3, 7	L	12, 15, 16				
5									SCREW
	05104679AA	1	2, 6	L	11, 12, 14, 15, 16				
		1	2, 6	L	51, 52, 54, 55, 56				
		4	3, 7	L	12, 15, 16				
6									HANDLE, Sliding Door Interior
	05132049AA	1	2, 6	L	11, 12, 14, 15, 16				
		1	2, 6	L	51, 52, 54, 55, 56				

SPRINTER (VA)

SERIES	LINE	BODY	ENGINE	TRANSMISSION
L = LOWLINE	3 = HD DODGE 2WD 6 = Lt. Duty DODGE 4WD 2 = Med. Duty DODGE 2WD 7 = Med. Duty DODGE 4WD	55 = Wagon 140" 54 = Wagon 118" 52 = Wagon 140" 51 = Wagon 118" 12 = Van 140" 11 = Van 118" 06 = Front Section 158" 14 = Van 118" 15 = Van 140" 16 = Van 158" 56 = Wagon 158" 01 = Chassis Forward Control 118" 02 = Chassis Forward Control 140"	EX8 = Engine-2.7L I5 Mercedes Turbo Diesel	DGJ = Transmission-5-Spd. Automatic,W5A580

Door, Sliding Cargo Lock And Controls
Figure DVA-330

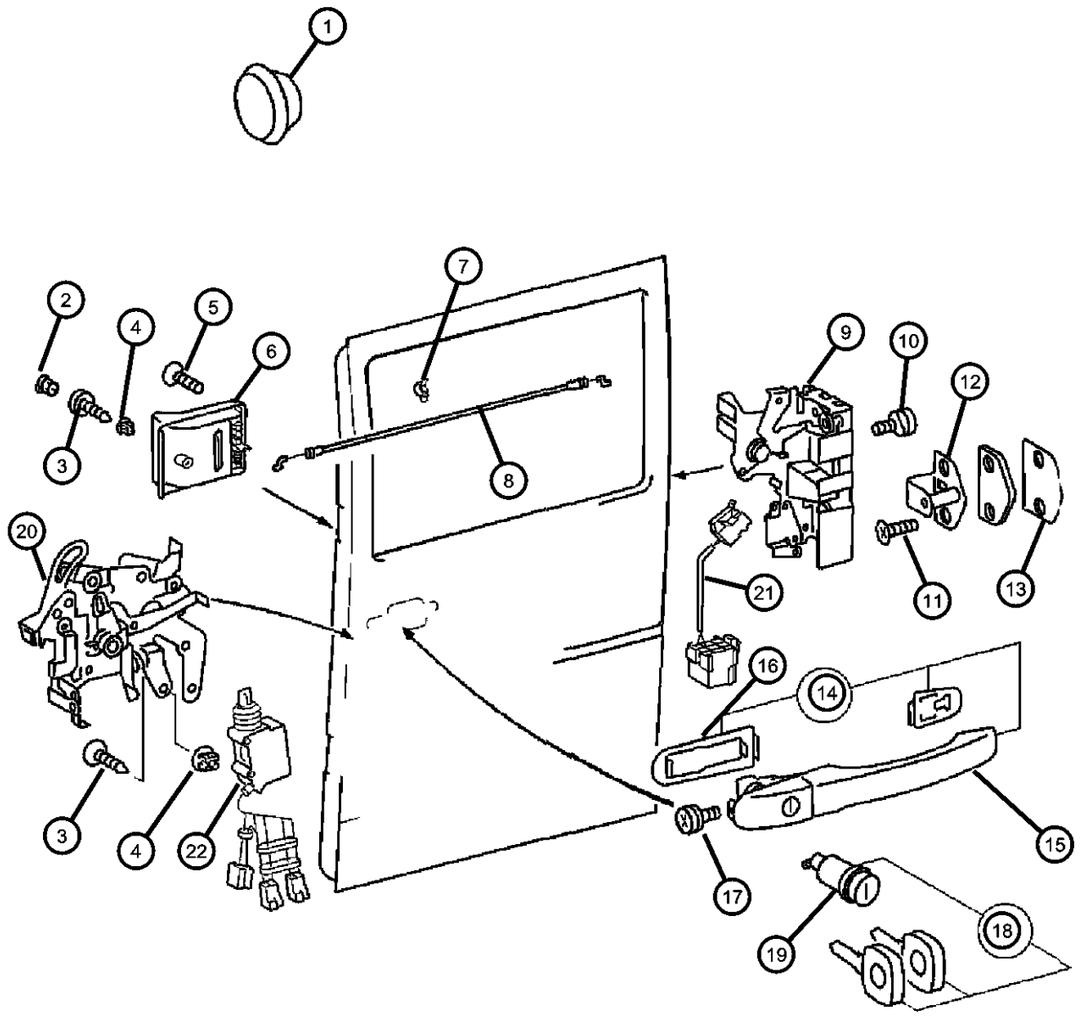

ITEM	PART NUMBER	QTY	LINE	SERIES	BODY	ENGINE	TRANS	TRIM	DESCRIPTION
7									CLAMP
	05103736AA	1	2, 6	L	51, 52, 54, 55, 56				
		1	3, 7	L	12, 15, 16				
		1	2, 6	L	14, 15, 16, 11, 12				
8									ROD, Inside Handle to Latch
	05103587AA	1	2, 6	L	11, 12, 14, 15, 16				
		1	2, 6	L	51, 52, 54, 55, 56				
		1	3, 7	L	12, 15, 16				
9									LATCH, Cargo Door
	05104357AA	1	3, 7	L	12, 15, 16				[GKE]
		1	2, 6	L	11, 12, 14, 15, 16				[GKE]
		1	2, 6	L	51, 52, 54, 55, 56				[GKE]
	05104358AA	1	2, 6	L	11, 12, 14, 15, 16				[GKA]
10									SCREW
	05103723AA	3	2, 6	L	11, 12, 14, 15, 16				
		2	2, 6	L	51, 52, 54, 55, 56				
		2	3, 7	L	12, 15, 16				
11									SCREW
	05103715AA	2	2, 6	L	12, 14, 15, 16, 11				
		2	2, 6	L	51, 52, 54, 55, 56				
		2	3, 7	L	12, 15, 16				
12									LATCH, Front Door
	05123700AA	1	3, 7	L	12, 15, 16				

SPRINTER (VA)

SERIES	LINE	BODY	ENGINE	TRANSMISSION
L = LOWLINE	3 = HD DODGE 2WD 6 = Lt. Duty DODGE 4WD 2 = Med. Duty DODGE 2WD 7 = Med. Duty DODGE 4WD	55 = Wagon 140" 54 = Wagon 118" 52 = Wagon 140" 51 = Wagon 118" 12 = Van 140" 11 = Van 118" 06 = Front Section 158" 14 = Van 118" 15 = Van 140" 16 = Van 158" 56 = Wagon 158" 01 = Chassis Forward Control 118" 02 = Chassis Forward Control 140"	EX8 = Engine-2.7L I5 Mercedes Turbo Diesel	DGJ = Transmission-5-Spd. Automatic,W5A580

Door, Sliding Cargo Lock And Controls
Figure DVA-330

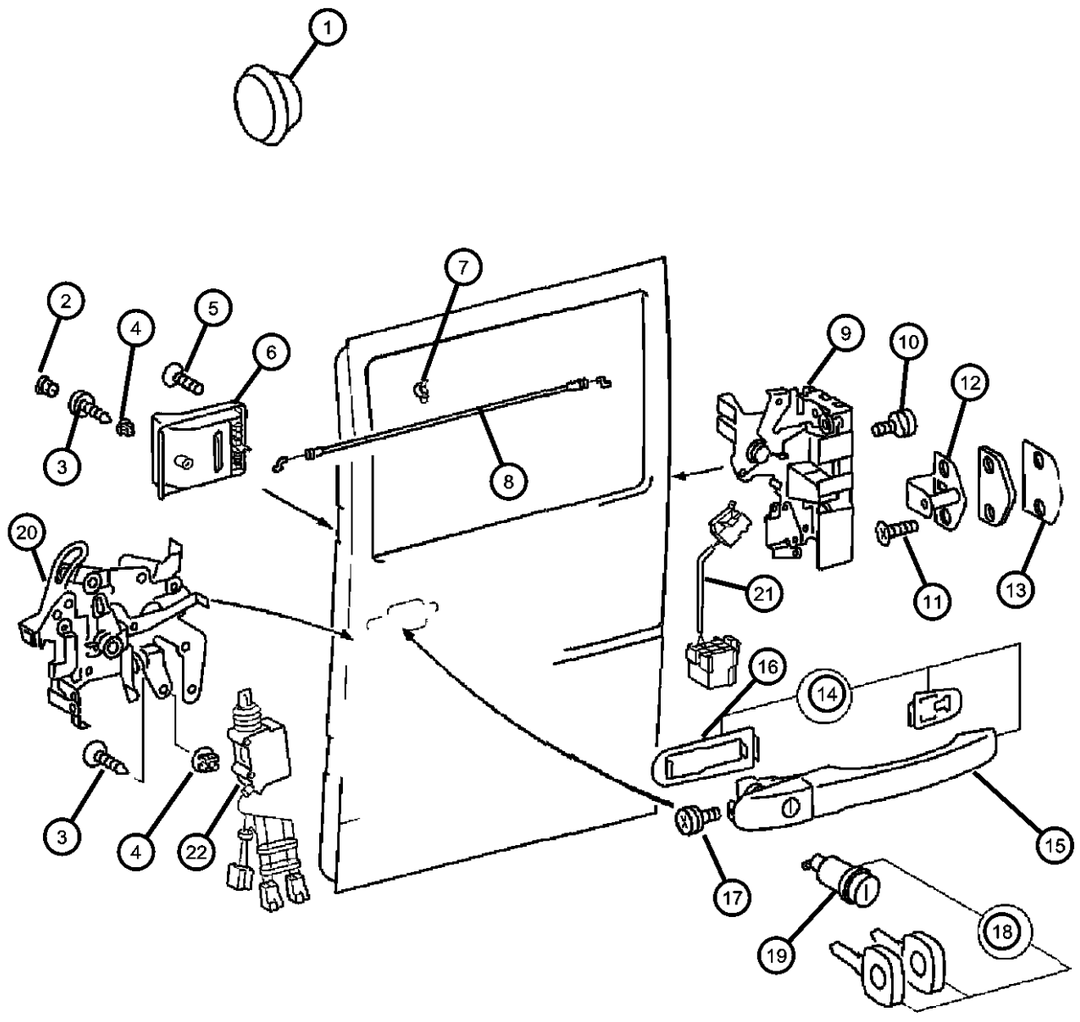

ITEM	PART NUMBER	QTY	LINE	SERIES	BODY	ENGINE	TRANS	TRIM	DESCRIPTION
		1	2, 6	L	11, 12, 14, 15, 16				
		1	2, 6	L	51, 52, 54, 55, 56				
13									PLATE, Striker
	05103591AA	1	2, 6	L	11, 12, 14, 15, 16				
		1	2, 6	L	51, 52, 54, 55, 56				
		1	3, 7	L	12, 15, 16				
14									HANDLE, Cargo Door
	05104415AA	1	2, 6	L	11, 12, 14, 15, 16				
		1	2, 6	L	51, 52, 54, 55, 56				
		1	3, 7	L	12, 15, 16				
15									PAD
	05103672AA	1	2, 6	L	11, 12, 14, 15, 16				
		1	2, 6	L	51, 52, 54, 55, 56				
		1	3, 7	L	12, 15, 16				
16									PAD
	05103673AA	1	3, 7	L	12, 15, 16				
		1	2, 6	L	11, 12, 14, 15, 16				
		1	2, 6	L	51, 52, 54, 55, 56				
17									SCREW, Front Door Handle
	05125414AA	1	2, 6	L	11, 12, 14, 15, 16				
		1	2, 6	L	51, 52, 54, 55, 56				
		1	3, 7	L	12, 15, 16				
18									CYLINDER, Door Lock

SPRINTER (VA)

SERIES	LINE	BODY	ENGINE	TRANSMISSION
L = LOWLINE	3 = HD DODGE 2WD 6 = Lt. Duty DODGE 4WD 2 = Med. Duty DODGE 2WD 7 = Med. Duty DODGE 4WD	55 = Wagon 140" 54 = Wagon 118" 52 = Wagon 140" 51 = Wagon 118" 12 = Van 140" 11 = Van 118" 06 = Front Section 158" 14 = Van 118" 15 = Van 140" 16 = Van 158" 56 = Wagon 158" 01 = Chassis Forward Control 118" 02 = Chassis Forward Control 140"	EX8 = Engine-2.7L I5 Mercedes Turbo Diesel	DGJ = Transmission-5-Spd. Automatic,W5A580

AR = use ase required - = Non illustrrated part

Door, Sliding Cargo Lock And Controls
Figure DVA-330

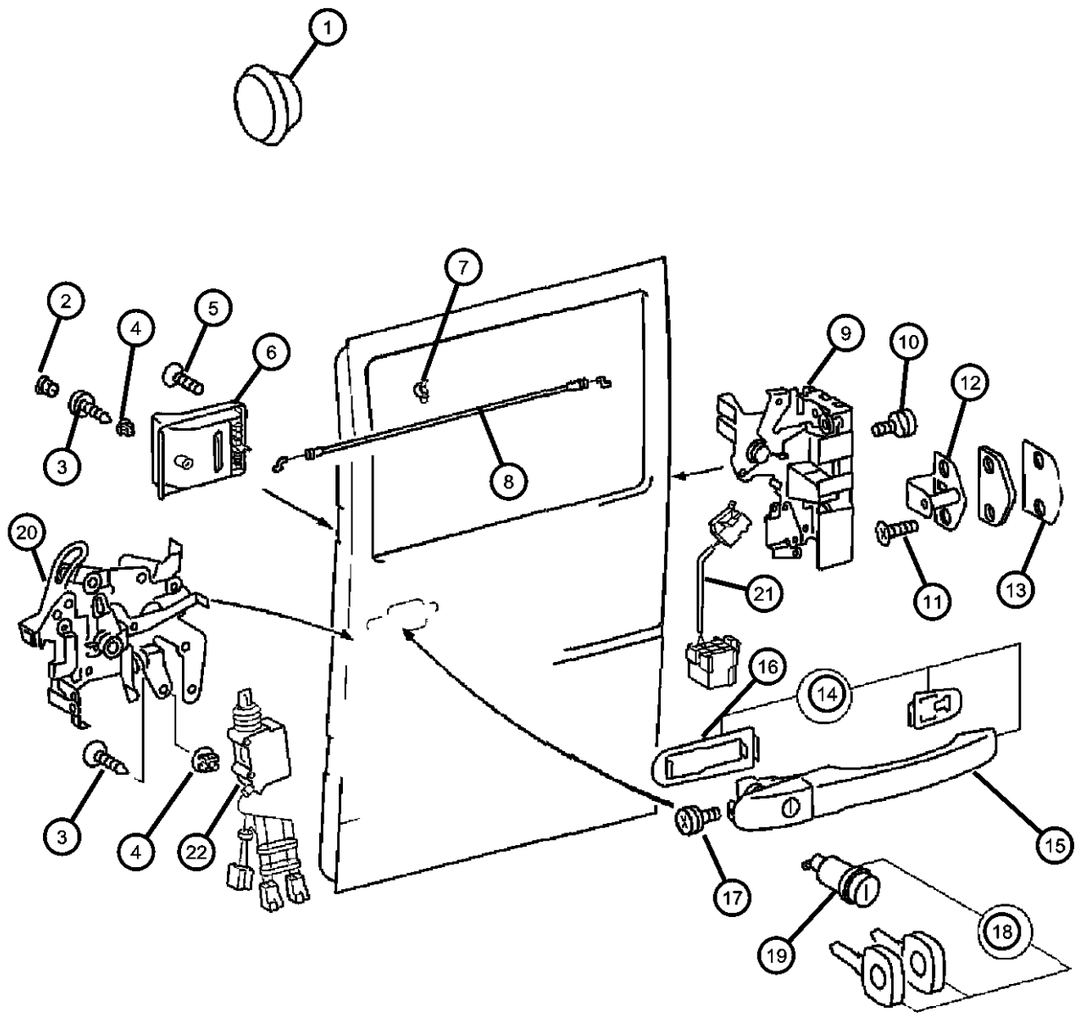

ITEM	PART NUMBER	QTY	LINE	SERIES	BODY	ENGINE	TRANS	TRIM	DESCRIPTION
	05133521AA	1	2, 6	L	11, 12, 14, 15, 16				
		1	2, 6	L	51, 52, 54, 55, 56				
		1	3, 7	L	12, 15, 16				
19									CYLINDER, Door Lock
	05114364AA	1	2, 6	L	01, 02, 06				
		1	2, 6	L	11, 12, 14, 15, 16				
		1	6, 2	L	52, 54, 55, 56, 51				
		1	3, 7	L	12, 15, 16				
20									LOCK, Side Cargo Door
	05104359AA	1	2, 6	L	11, 12, 14, 15, 16				With or Without Power Locks [JPB], Without First Rear Bench 3 Passenger Seat [[CFB], Right
		1	2, 6	L	51, 52, 54, 55, 56				Without Power Locks [JPB], Right
		1	3, 7	L	12, 15, 16				Must also order 05103756AA, Right
	05104361AA	1	3, 7	L	12, 15, 16				Anti-Child Device, Right
	05123814AA	1	2, 6	L	11, 12, 14, 15, 16				Must also order 05103756AA, Left
		1	2, 6	L	51, 52, 54, 55, 56				Must also order 05103756AA, Left
	05131977AA	1	2, 6	L	11, 12, 14, 15, 16				With Power Locks [JPB], With First Rear Bench 3 Passenger Seat [[CFB], Right
		1	2, 6	L	51, 52, 54, 55, 56				With Power Locks [JPB], Right
21									SWITCH, Door Lock
	05133999AA	1	2, 6	L	11, 12, 14, 15, 16				Left
		1	2, 6	L	51, 52, 54, 55, 56				Left
		1	3, 7	L	12, 15, 16				Left

SPRINTER (VA)

SERIES	LINE	BODY	ENGINE	TRANSMISSION
L = LOWLINE	3 = HD DODGE 2WD 6 = Lt. Duty DODGE 4WD 2 = Med. Duty DODGE 2WD 7 = Med. Duty DODGE 4WD	55 = Wagon 140" 54 = Wagon 118" 52 = Wagon 140" 51 = Wagon 118" 12 = Van 140" 11 = Van 118" 06 = Front Section 158" 14 = Van 118" 15 = Van 140" 16 = Van 158" 56 = Wagon 158" 01 = Chassis Forward Control 118" 02 = Chassis Forward Control 140"	EX8 = Engine-2.7L I5 Mercedes Turbo Diesel	DGJ = Transmission-5-Spd. Automatic,W5A580

Door, Sliding Cargo Lock And Controls
Figure DVA-330

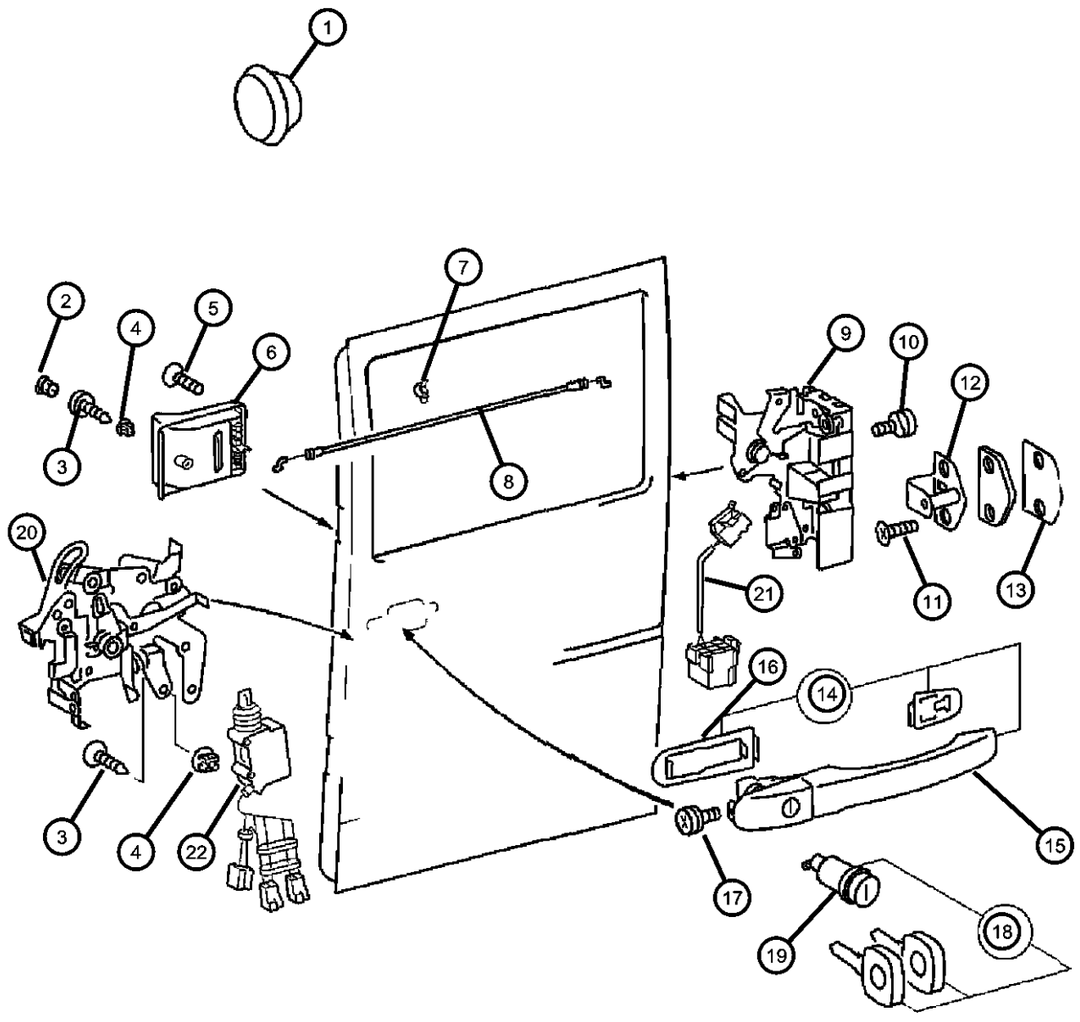

ITEM	PART NUMBER	QTY	LINE	SERIES	BODY	ENGINE	TRANS	TRIM	DESCRIPTION
	05133527AA	1	2, 6	L	11, 12, 14, 15, 16				Right
		1	2, 6	L	51, 52, 54, 55, 56				Right
		1	3, 7	L	12, 15, 16				Right
22									ACTUATOR, Power Door Lock
	05103756AA	1	3, 7	L	12, 15, 16				
		1	2, 6	L	15, 16, 11, 12, 14				
		1	2, 6	L	51, 52, 54, 55, 56				

SPRINTER (VA)

SERIES	LINE	BODY	ENGINE	TRANSMISSION
L = LOWLINE	3 = HD DODGE 2WD 6 = Lt. Duty DODGE 4WD 2 = Med. Duty DODGE 2WD 7 = Med. Duty DODGE 4WD	55 = Wagon 140" 54 = Wagon 118" 52 = Wagon 140" 51 = Wagon 118" 12 = Van 140" 11 = Van 118" 06 = Front Section 158" 14 = Van 118" 15 = Van 140" 16 = Van 158" 56 = Wagon 158" 01 = Chassis Forward Control 118" 02 = Chassis Forward Control 140"	EX8 = Engine-2.7L I5 Mercedes Turbo Diesel	DGJ = Transmission-5-Spd. Automatic,W5A580

Door, Cargo Shell And Hinges
Figure DVA-410

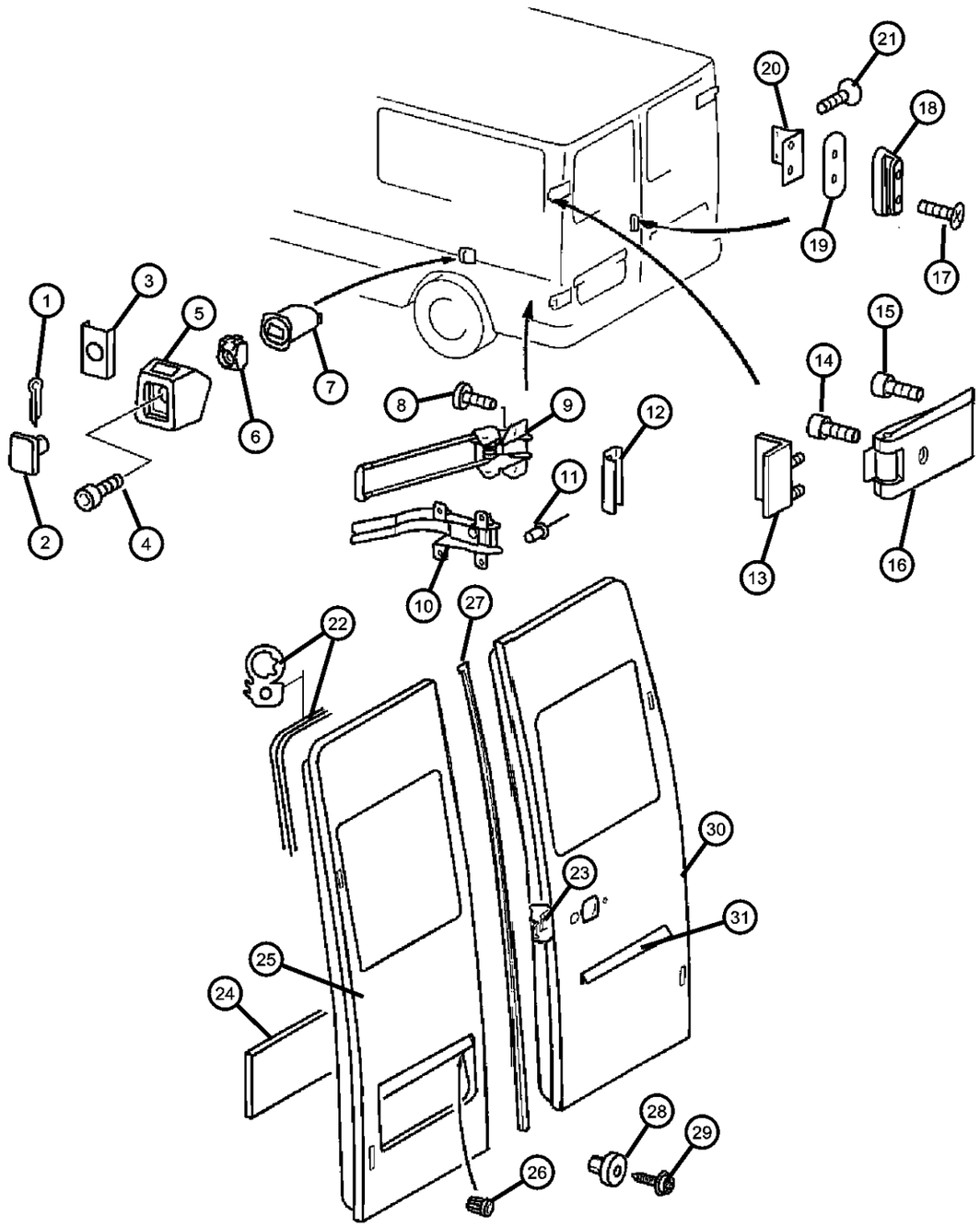

ITEM	PART NUMBER	QTY	LINE	SERIES	BODY	ENGINE	TRANS	TRIM	DESCRIPTION
1									PIN, Cotter
	05104611AA	2	2, 6	L	11, 12, 14, 15, 16				
		2	2, 6	L	51, 52, 54, 55, 56				
		2	3, 7	L	12, 15, 16				
2									MAGNET
	05104423AA	1	2, 6	L	11, 12, 14, 15, 16				
		1	2, 6	L	51, 52, 54, 55, 56				
		1	3, 7	L	12, 15, 16				
3									PLATE, Support
	05104433AA	1	2, 6	L	11, 12, 14, 15, 16				
		1	2, 6	L	51, 52, 54, 55, 56				
		1	3, 7	L	12, 15, 16				
4									SCREW
	05103719AA	1	2, 6	L	11, 12, 14, 15, 16				
		1	2, 6	L	52, 54, 55, 56, 51				
		1	3, 7	L	12, 15, 16				
5									BUMPER, Door
	05104369AA	1	2, 6	L	11, 12, 14, 15, 16				
		1	2, 6	L	51, 52, 54, 55, 56				
		1	3, 7	L	12, 15, 16				
6									NUT, Snap In
	05103840AA	1	2, 6	L	11, 12, 14, 15, 16				
		1	2, 6	L	51, 52, 54, 55, 56				

SPRINTER (VA)

SERIES	LINE	BODY	ENGINE	TRANSMISSION
L = LOWLINE	3 = HD DODGE 2WD 6 = Lt. Duty DODGE 4WD 2 = Med. Duty DODGE 2WD 7 = Med. Duty DODGE 4WD	55 = Wagon 140" 54 = Wagon 118" 52 = Wagon 140" 51 = Wagon 118" 12 = Van 140" 11 = Van 118" 06 = Front Section 158" 14 = Van 118" 15 = Van 140" 16 = Van 158" 56 = Wagon 158" 01 = Chassis Forward Control 118" 02 = Chassis Forward Control 140"	EX8 = Engine-2.7L I5 Mercedes Turbo Diesel	DGJ = Transmission-5-Spd. Automatic,W5A580

Door, Cargo Shell And Hinges
Figure DVA-410

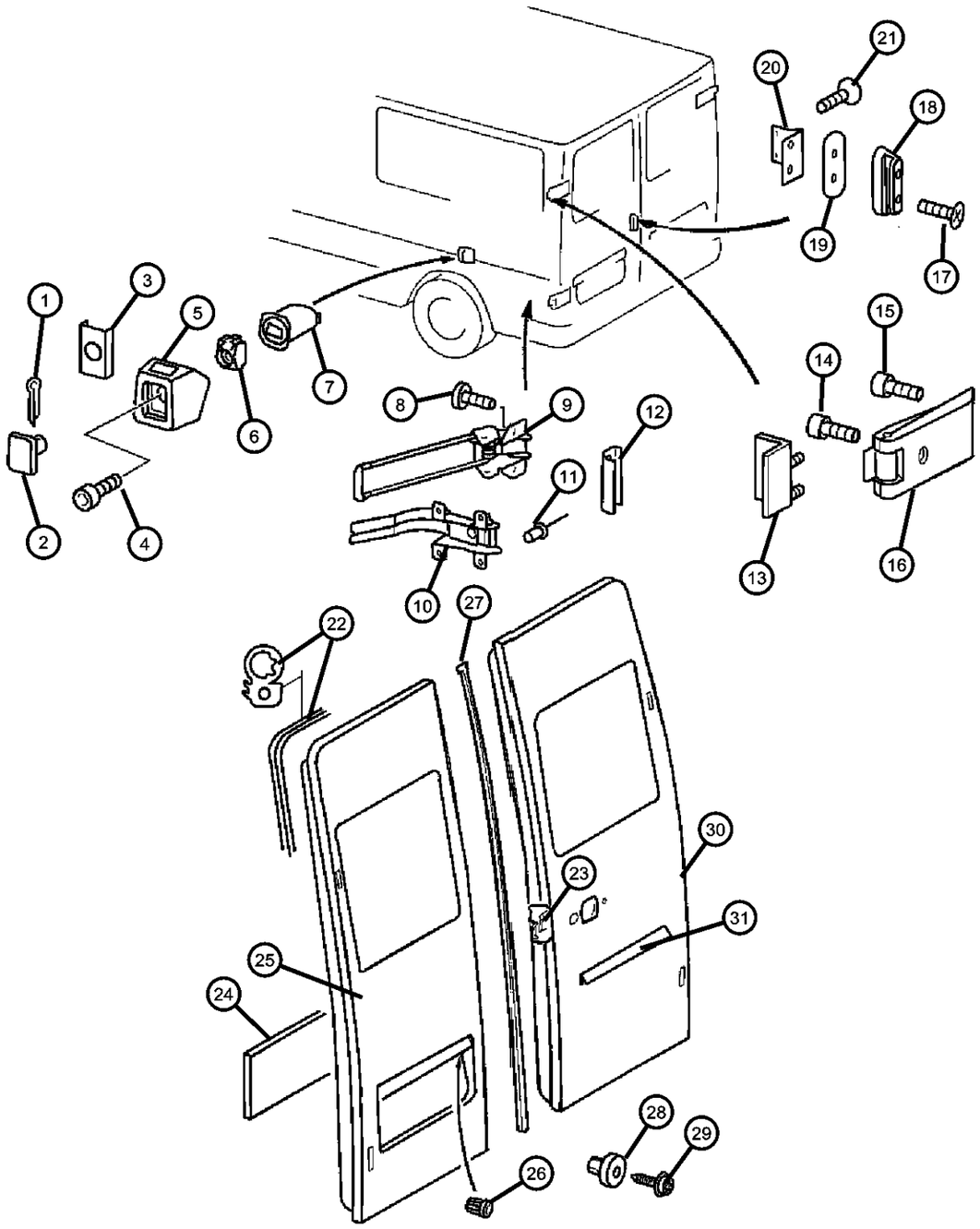

ITEM	PART NUMBER	QTY	LINE	SERIES	BODY	ENGINE	TRANS	TRIM	DESCRIPTION
		1	3, 7	L	12, 15, 16				
7									REINFORCEMENT
	05104173AA	1	2, 6	L	11, 12, 14, 15				
		1	2, 6	L	51, 52, 54, 55				
		1	3, 7	L	12, 15				
8		1							SCREW, 05103716aa, (NOT SERVICED)
9									CHECK, Rear Door
	05104414AA	1	2, 6	L	11, 12, 14, 15, 16				
		1	2, 6	L	51, 52, 54, 55, 56				
		1	3, 7	L	12, 15, 16				
10									BRACKET, Door Inside
	05104413AA	1	2, 6	L	51, 52, 54, 55, 56				
		1	2, 6	L	11, 12, 14, 15, 16				
		1	3, 7	L	12, 15, 16				
11									RIVET
	05103838AA	4	2, 6	L	11, 12, 14, 15, 16				
		4	2, 6	L	51, 52, 54, 55, 56				
		4	3, 7	L	12, 15, 16				
12									BRACKET, Cargo Door Hinge
	05104430AA	1	2, 6	L	11, 12, 14, 15, 16				
		1	2, 6	L	51, 52, 54, 55, 56				
		1	3, 7	L	12, 15, 16				
13									STOPPER, Cargo Door

SPRINTER (VA)

SERIES	LINE	BODY	ENGINE	TRANSMISSION
L = LOWLINE	3 = HD DODGE 2WD 6 = Lt. Duty DODGE 4WD 2 = Med. Duty DODGE 2WD 7 = Med. Duty DODGE 4WD	55 = Wagon 140" 54 = Wagon 118" 52 = Wagon 140" 51 = Wagon 118" 12 = Van 140" 11 = Van 118" 06 = Front Section 158" 14 = Van 118" 15 = Van 140" 16 = Van 158" 56 = Wagon 158" 01 = Chassis Forward Control 118" 02 = Chassis Forward Control 140"	EX8 = Engine-2.7L I5 Mercedes Turbo Diesel	DGJ = Transmission-5-Spd. Automatic,W5A580

Door, Cargo Shell And Hinges
Figure DVA-410

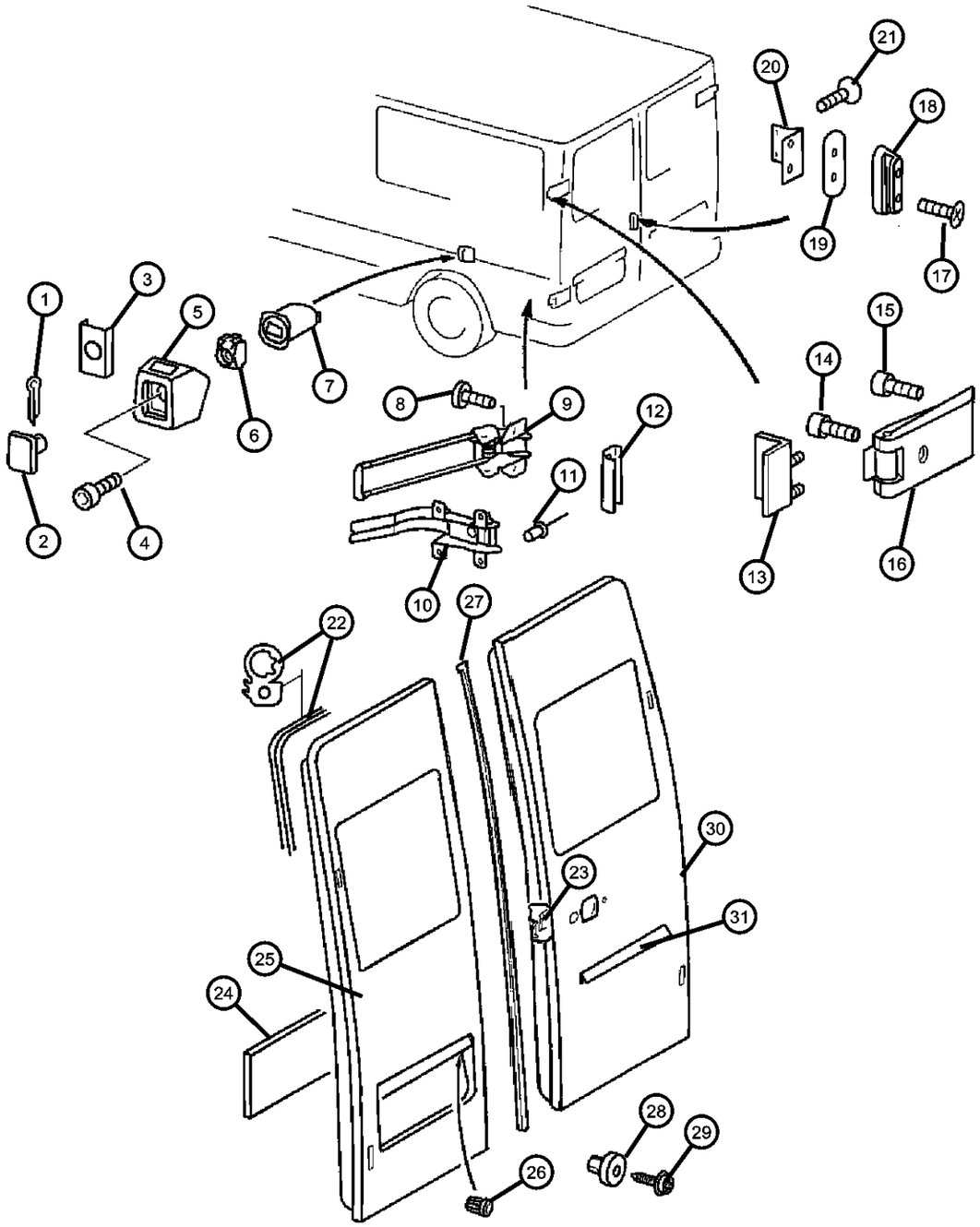

ITEM	PART NUMBER	QTY	LINE	SERIES	BODY	ENGINE	TRANS	TRIM	DESCRIPTION
	05104385AA	2	2, 6	L	16, 11, 12, 14, 15				
		2	2, 6	L	51, 52, 54, 55, 56				
		2	3, 7	L	12, 15, 16				
14									BOLT, Torx
	05125420AA	1	2, 6	L	51, 52, 54, 55, 56				
		1	2, 6	L	01, 02, 06				
		1	2, 6	L	11, 12, 14, 15, 16				
15	05073721AA	1		L					SCREW
16									HINGE, Rear Door
	05104378AA	2	2, 6	L	11, 12, 14, 15, 16				
		2	2, 6	L	51, 52, 54, 55, 56				
		2	3, 7	L	12, 15, 16				
17									SCREW
	05104635AA	2	2, 6	L	11, 12, 14, 15, 16				
		2	2, 6	L	51, 52, 54, 55, 56				
		2	3, 7	L	12, 15, 16				
18									BUMPER, Door
	05104370AA	1	2, 6	L	11, 12, 14, 15, 16				
		1	2, 6	L	55, 56, 51, 52, 54				
		1	3, 7	L	12, 15, 16				
19									GASKET, Bumper Bracket
	05104432AA	1	2, 6	L	11, 12, 14, 15, 16				
		1	2, 6	L	51, 52, 54, 55, 56				

SPRINTER (VA)

SERIES	LINE	BODY	ENGINE	TRANSMISSION
L = LOWLINE	3 = HD DODGE 2WD 6 = Lt. Duty DODGE 4WD 2 = Med. Duty DODGE 2WD 7 = Med. Duty DODGE 4WD	55 = Wagon 140" 54 = Wagon 118" 52 = Wagon 140" 51 = Wagon 118" 12 = Van 140" 11 = Van 118" 06 = Front Section 158" 14 = Van 118" 15 = Van 140" 16 = Van 158" 56 = Wagon 158" 01 = Chassis Forward Control 118" 02 = Chassis Forward Control 140"	EX8 = Engine-2.7L I5 Mercedes Turbo Diesel	DGJ = Transmission-5-Spd. Automatic,W5A580

Door, Cargo Shell And Hinges
Figure DVA-410

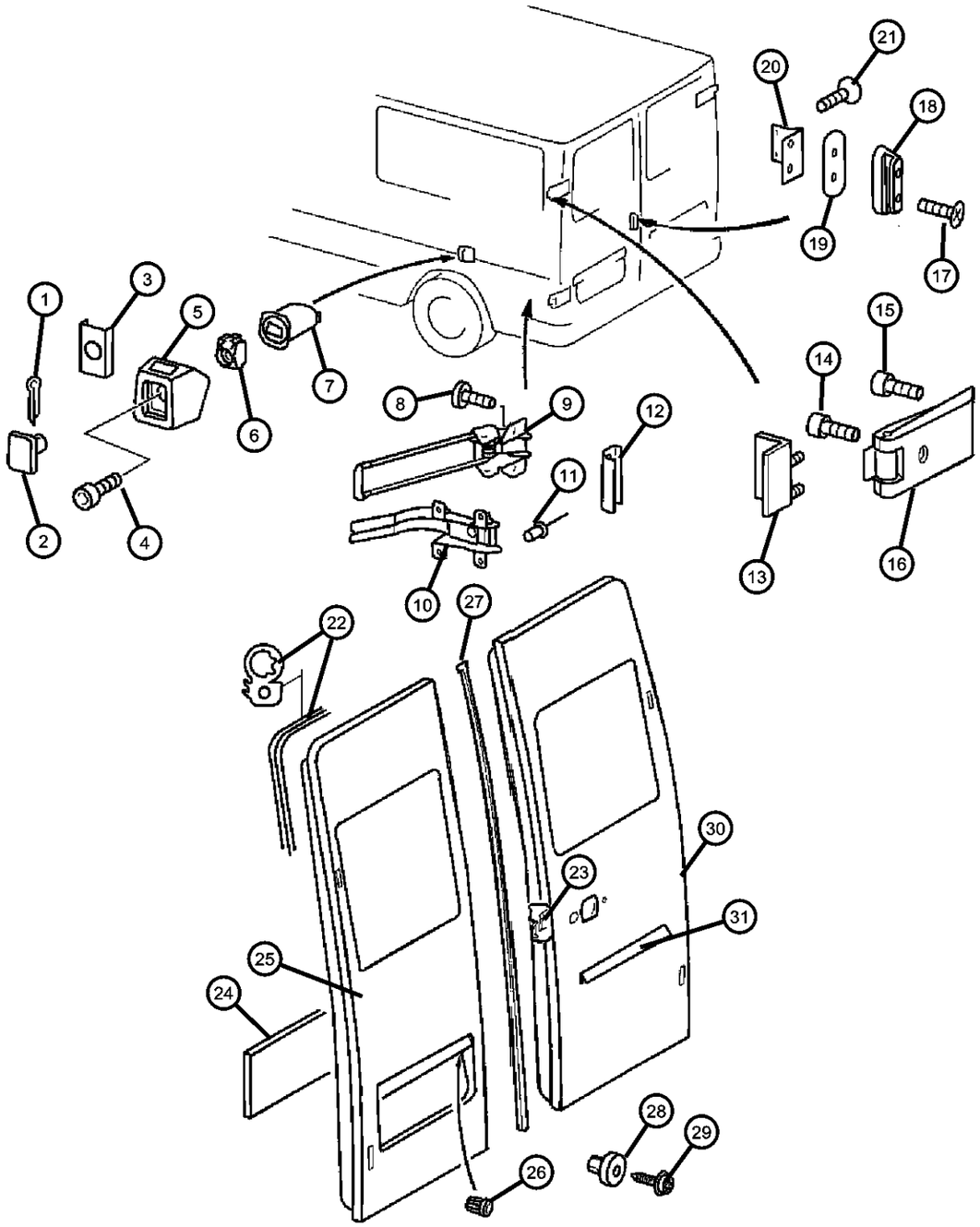

ITEM	PART NUMBER	QTY	LINE	SERIES	BODY	ENGINE	TRANS	TRIM	DESCRIPTION
		1	3, 7	L	12, 15, 16				
20									BRACKET, Hinge Reinforcement
	05123934AA	1	2, 6	L	11, 12, 14, 15, 16				
		1	2, 6	L	51, 52, 54, 55, 56				
		1	3, 7	L	12, 15, 16				
21									SCREW
	05133932AA	4	3, 7	L	12, 15, 16				
		4	2, 6	L	11, 12, 14, 15, 16				
		4	2, 6	L	51, 52, 54, 55, 56				
22									WEATHERSTRIP, Cargo Door
	05104272AA	1	2, 6	L	11, 12, 14, 15, 16				[-GL8]
		1	2, 6	L	51, 52, 54, 55, 56				[-GL8]
		1	3, 7	L	16, 12, 15				[-GL8]
	05104274AA	1	2, 6	L	11, 12, 14, 15, 16				
		1	2, 6	L	51, 52, 54, 55, 56				
		1	3, 7	L	12, 15, 16				
23		1							FILM, (NOT SERVICED)
24									SILENCER, Door
	05122518AA	2	2, 6	L	11, 12, 14, 15, 16				
		2	2, 6	L	51, 52, 54, 55, 56				
		2	3, 7	L	12, 15, 16				
25									DOOR, Rear Cargo
	05123913AA	1	2, 6	L	11, 12, 14, 15, 16				[GEM], Left

SPRINTER (VA)

SERIES	LINE	BODY	ENGINE	TRANSMISSION
L = LOWLINE	3 = HD DODGE 2WD 6 = Lt. Duty DODGE 4WD 2 = Med. Duty DODGE 2WD 7 = Med. Duty DODGE 4WD	55 = Wagon 140" 54 = Wagon 118" 52 = Wagon 140" 51 = Wagon 118" 12 = Van 140" 11 = Van 118" 06 = Front Section 158" 14 = Van 118" 15 = Van 140" 16 = Van 158" 56 = Wagon 158" 01 = Chassis Forward Control 118" 02 = Chassis Forward Control 140"	EX8 = Engine-2.7L I5 Mercedes Turbo Diesel	DGJ = Transmission-5-Spd. Automatic,W5A580

AR = use ase required - = Non illustrrated part

Door, Cargo Shell And Hinges
Figure DVA-410

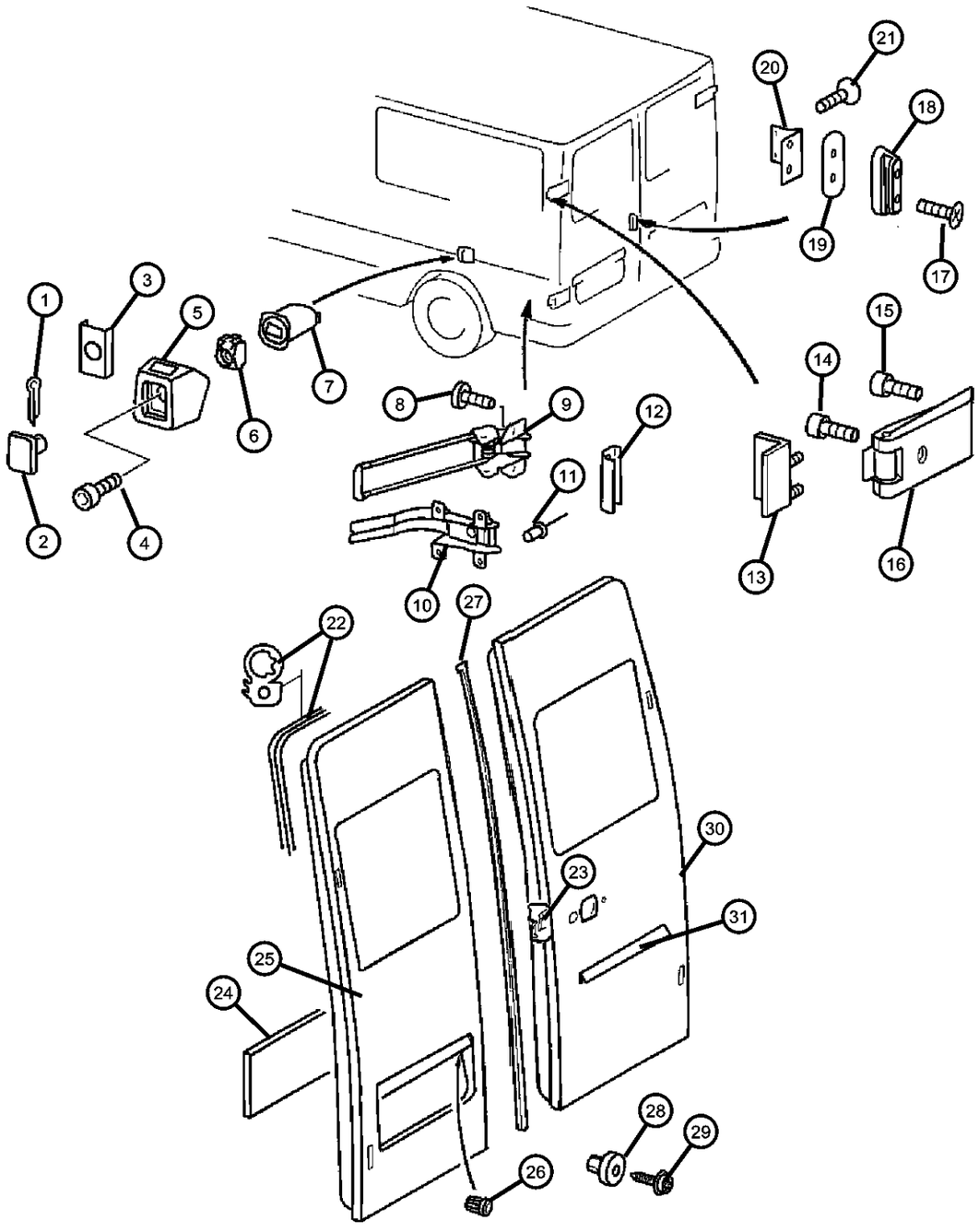

ITEM	PART NUMBER	QTY	LINE	SERIES	BODY	ENGINE	TRANS	TRIM	DESCRIPTION
		1	2, 6	L	51, 52, 54, 55, 56				[-GL8], Left
		1	3, 7	L	12, 15, 16				[GEM], Left
	05123917AA	1	2, 6	L	11, 12, 14, 15, 16				[MWJ+GEM], Left
		1	2, 6	L	51, 52, 54, 55, 56				[MWJ-GL8], Left
	05123905AA	1	2, 6	L	11, 12, 14, 15, 16				[-GL8], Left
		1	3, 7	L	12, 15, 16				[-GL8], Left
	05123909AA	1	2, 6	L	11, 12, 14, 15, 16				[MWJ-GL8], Left
		1	3, 7	L	12, 15, 16				[MWJ-GL8], Left
		1	3, 7	L	12, 15, 16				[MWJ+GEM], Left
26									NUT, Push In
	05103929AA	4	2, 6	L	11, 12, 14, 15, 16				
		4	2, 6	L	51, 52, 54, 55, 56				
		4	3, 7	L	12, 15, 16				
27									WEATHERSTRIP, Cargo Door
	05123955AA	1	3, 7	L	12, 15, 16				[-GL8]
	05104375AA	1	2, 6	L	11, 12, 14, 15, 16				
		1	2, 6	L	51, 52, 54, 55, 56				
		1	3, 7	L	12, 15, 16				
		1	2, 6	L	11, 12, 14, 15, 16				[-GL8]
		1	2, 6	L	51, 52, 54, 55, 56				[-GL8]
28		1							NUTSERT, Rivet, (NOT SERVICED),
29									SCREW

SPRINTER (VA)

SERIES	LINE	BODY	ENGINE	TRANSMISSION
L = LOWLINE	3 = HD DODGE 2WD 6 = Lt. Duty DODGE 4WD 2 = Med. Duty DODGE 2WD 7 = Med. Duty DODGE 4WD	55 = Wagon 140" 54 = Wagon 118" 52 = Wagon 140" 51 = Wagon 118" 12 = Van 140" 11 = Van 118" 06 = Front Section 158" 14 = Van 118" 15 = Van 140" 16 = Van 158" 56 = Wagon 158" 01 = Chassis Forward Control 118" 02 = Chassis Forward Control 140"	EX8 = Engine-2.7L I5 Mercedes Turbo Diesel	DGJ = Transmission-5-Spd. Automatic,W5A580

Door, Cargo Shell And Hinges
Figure DVA-410

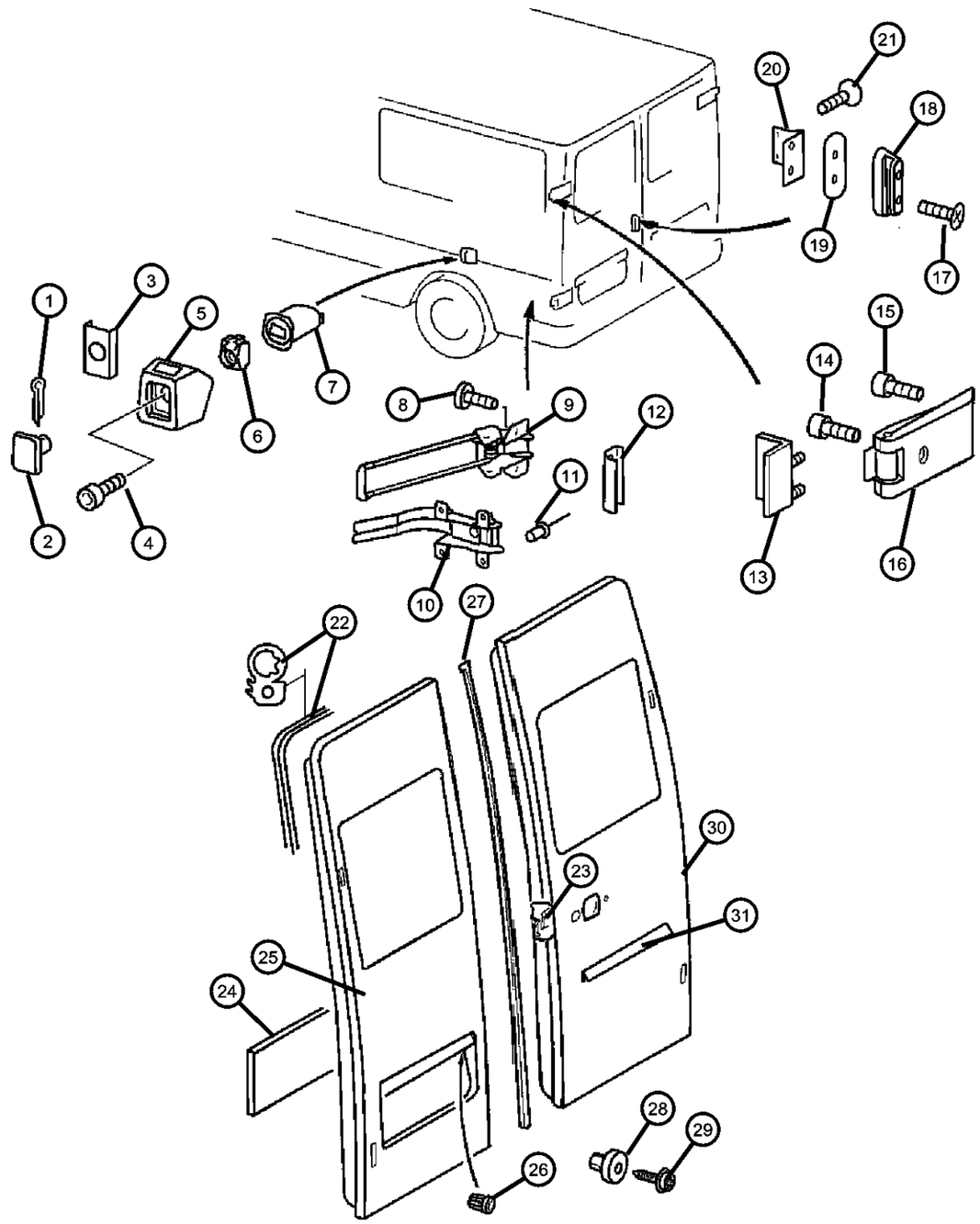

ITEM	PART NUMBER	QTY	LINE	SERIES	BODY	ENGINE	TRANS	TRIM	DESCRIPTION
	05133931AA	4	2, 6	L	16, 11, 12, 14, 15				
		4	2, 6	L	51, 52, 54, 55, 56				
		4	3, 7	L	12, 15, 16				
30									DOOR, Rear Cargo
	05123907AA	1	2, 6	L	11, 12, 14, 15, 16				[-GL8], Right
		1	3, 7	L	12, 15, 16				[-GL8], Right
	05123911AA	1	2, 6	L	11, 12, 14, 15, 16				[MWJ+GL8], Right
		1	3, 7	L	12, 15, 16				[MWJ+GL8], Right
	05123915AA	1	2, 6	L	11, 12, 14, 15, 16				[GEM], Right
		1	2, 6	L	51, 52, 54, 55, 56				[-GL8], Right
		1	3, 7	L	12, 15, 16				[GEM], Right
	05123919AA	1	2, 6	L	11, 12, 14, 15, 16				[MWJ+GEM], Right
		1	2, 6	L	51, 52, 54, 55, 56				[MWJ-GL8], Right
		1	3, 7	L	12, 15, 16				[MWJ-GL8], Right
31									NAMEPLATE, Rear Door
	05104454AA	1	2, 6	L	51, 52, 54, 55, 56				SPRINTER
		1	3, 7	L	12, 15, 16				SPRINTER

SPRINTER (VA)

SERIES	LINE	BODY	ENGINE	TRANSMISSION
L = LOWLINE	3 = HD DODGE 2WD 6 = Lt. Duty DODGE 4WD 2 = Med. Duty DODGE 2WD 7 = Med. Duty DODGE 4WD	55 = Wagon 140" 54 = Wagon 118" 52 = Wagon 140" 51 = Wagon 118" 12 = Van 140" 11 = Van 118" 06 = Front Section 158" 14 = Van 118" 15 = Van 140" 16 = Van 158" 56 = Wagon 158" 01 = Chassis Forward Control 118" 02 = Chassis Forward Control 140"	EX8 = Engine-2.7L I5 Mercedes Turbo Diesel	DGJ = Transmission-5-Spd. Automatic,W5A580

Door, Cargo Glass And Hardware
Figure DVA-420

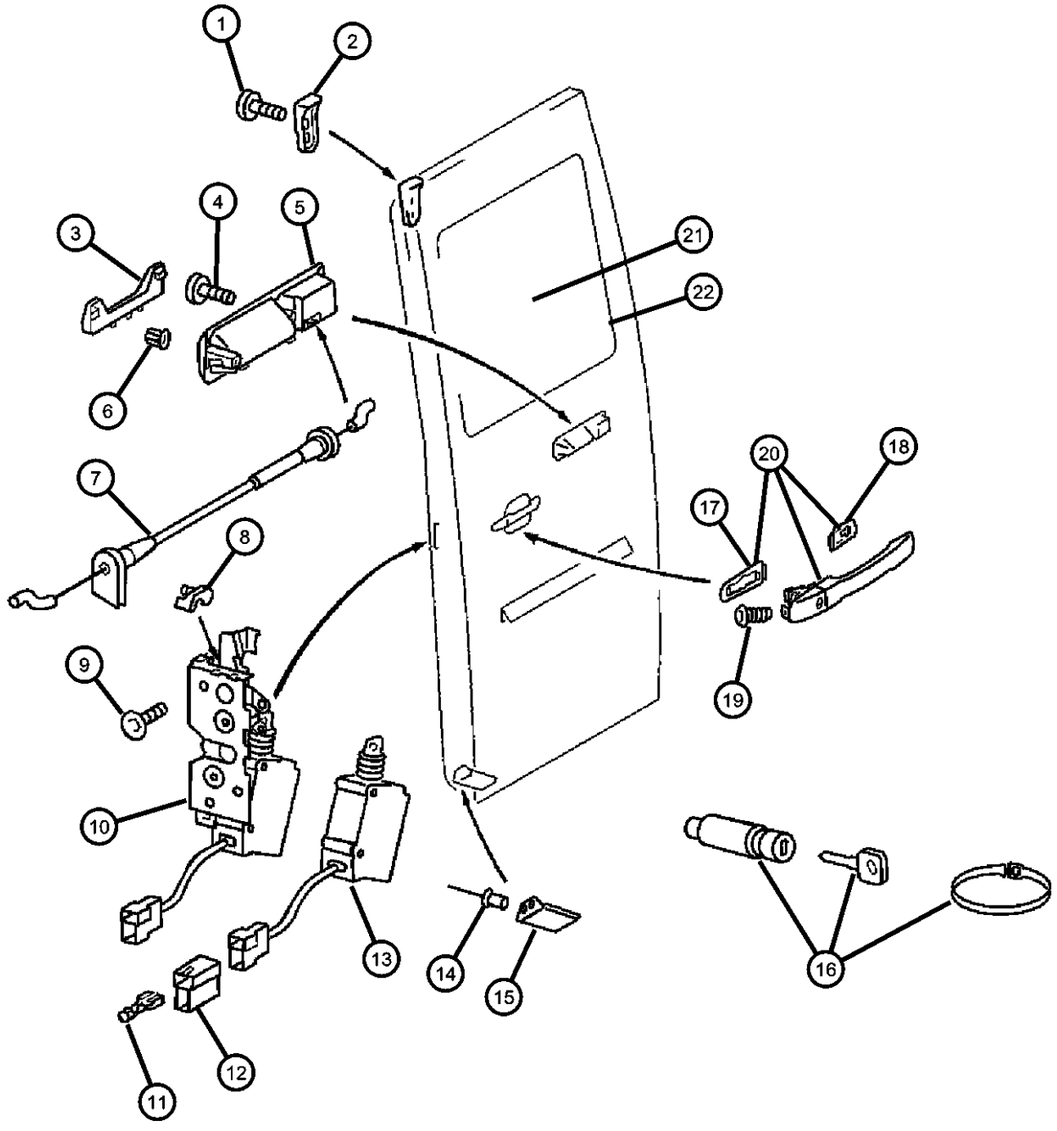

ITEM	PART NUMBER	QTY	LINE	SERIES	BODY	ENGINE	TRANS	TRIM	DESCRIPTION
1									SCREW
	06104142AA	2	2, 6	L	11, 12, 14, 15, 16				
		2	2, 6	L	51, 52, 54, 55, 56				
		2	3, 7	L	12, 15, 16				
2									SPACER, Door Lock Striker
	05123997AA	1	2, 6	L	12, 14, 15, 16, 11				
		1	2, 6	L	51, 52, 54, 55, 56				
		1	3, 7	L	12, 15, 16				
3									COVER, Handle
	1AT60BD1AA	1	2, 6	L	51, 52, 54, 55, 56				
		1	3, 7	L	12, 15, 16				
		1	2, 6	L	11, 12, 14, 15, 16				
4									SCREW
	06104142AA	2	2, 6	L	11, 12, 14, 15, 16				
		2	2, 6	L	51, 52, 54, 55, 56				
		2	3, 7	L	12, 15, 16				
5									HANDLE, Rear Door Interior
	05132053AA	1	2, 6	L	11, 12, 14, 15, 16				
		1	2, 6	L	51, 52, 54, 55, 56				
6									NUT
	06104884AA	2	3, 7	L	12, 15, 16				
		2	2, 6	L	11, 12, 14, 15, 16				
		2	2, 6	L	55, 56, 51, 52, 54				

SPRINTER (VA)

SERIES	LINE	BODY	ENGINE	TRANSMISSION
L = LOWLINE	3 = HD DODGE 2WD 6 = Lt. Duty DODGE 4WD 2 = Med. Duty DODGE 2WD 7 = Med. Duty DODGE 4WD	55 = Wagon 140" 54 = Wagon 118" 52 = Wagon 140" 51 = Wagon 118" 12 = Van 140" 11 = Van 118" 06 = Front Section 158" 14 = Van 118" 15 = Van 140" 16 = Van 158" 56 = Wagon 158" 01 = Chassis Forward Control 118" 02 = Chassis Forward Control 140"	EX8 = Engine-2.7L I5 Mercedes Turbo Diesel	DGJ = Transmission-5-Spd. Automatic,W5A580

Door, Cargo Glass And Hardware
Figure DVA-420

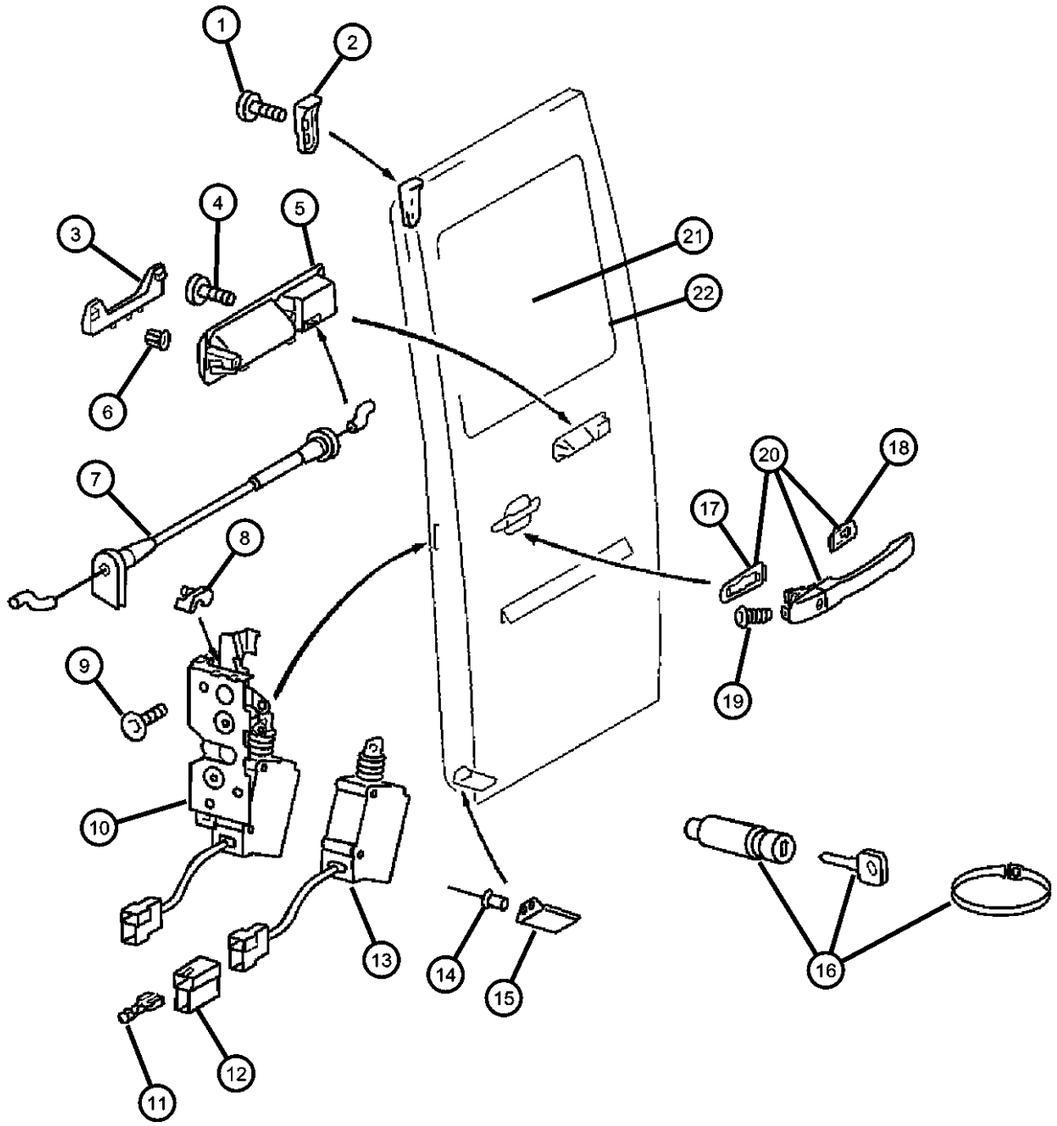

ITEM	PART NUMBER	QTY	LINE	SERIES	BODY	ENGINE	TRANS	TRIM	DESCRIPTION
7									CABLE
	05104416AA	1	2, 6	L	11, 12, 14, 15, 16				
		1	2, 6	L	51, 52, 54, 55, 56				
		1	3, 7	L	12, 15, 16				
8									CONNECTOR, Solenoid
	05103674AA	1	2, 6	L	11, 12, 14, 15, 16				
		1	2, 6	L	51, 52, 54, 55, 56				
		1	3, 7	L	12, 15, 16				
9									SCREW
	05103723AA	2	2, 6	L	11, 12, 14, 15, 16				
		2	2, 6	L	51, 52, 54, 55, 56				
		2	3, 7	L	12, 15, 16				
10									LATCH, Rear Door
	05131997AA	1	2, 6	L	11, 12, 14, 15, 16				
		1	2, 6	L	51, 52, 54, 55, 56				
11									TERMINAL, Female
	05114451AA	99	2, 6	L	14, 15, 16, 11, 12				
		99	2, 6	L	51, 52, 54, 55, 56				
		99	3, 7	L	12, 15, 16				
12									INSULATOR, 2 Way Female
	05103754AA	1	2, 6	L	11, 12, 14, 15, 16				
		1	2, 6	L	51, 52, 54, 55, 56				
		1	3, 7	L	12, 15, 16				

SPRINTER (VA)

SERIES	LINE	BODY	ENGINE	TRANSMISSION
L = LOWLINE	3 = HD DODGE 2WD 6 = Lt. Duty DODGE 4WD 2 = Med. Duty DODGE 2WD 7 = Med. Duty DODGE 4WD	55 = Wagon 140" 54 = Wagon 118" 52 = Wagon 140" 51 = Wagon 118" 12 = Van 140" 11 = Van 118" 06 = Front Section 158" 14 = Van 118" 15 = Van 140" 16 = Van 158" 56 = Wagon 158" 01 = Chassis Forward Control 118" 02 = Chassis Forward Control 140"	EX8 = Engine-2.7L I5 Mercedes Turbo Diesel	DGJ = Transmission-5-Spd. Automatic,W5A580

Door, Cargo Glass And Hardware
Figure DVA-420

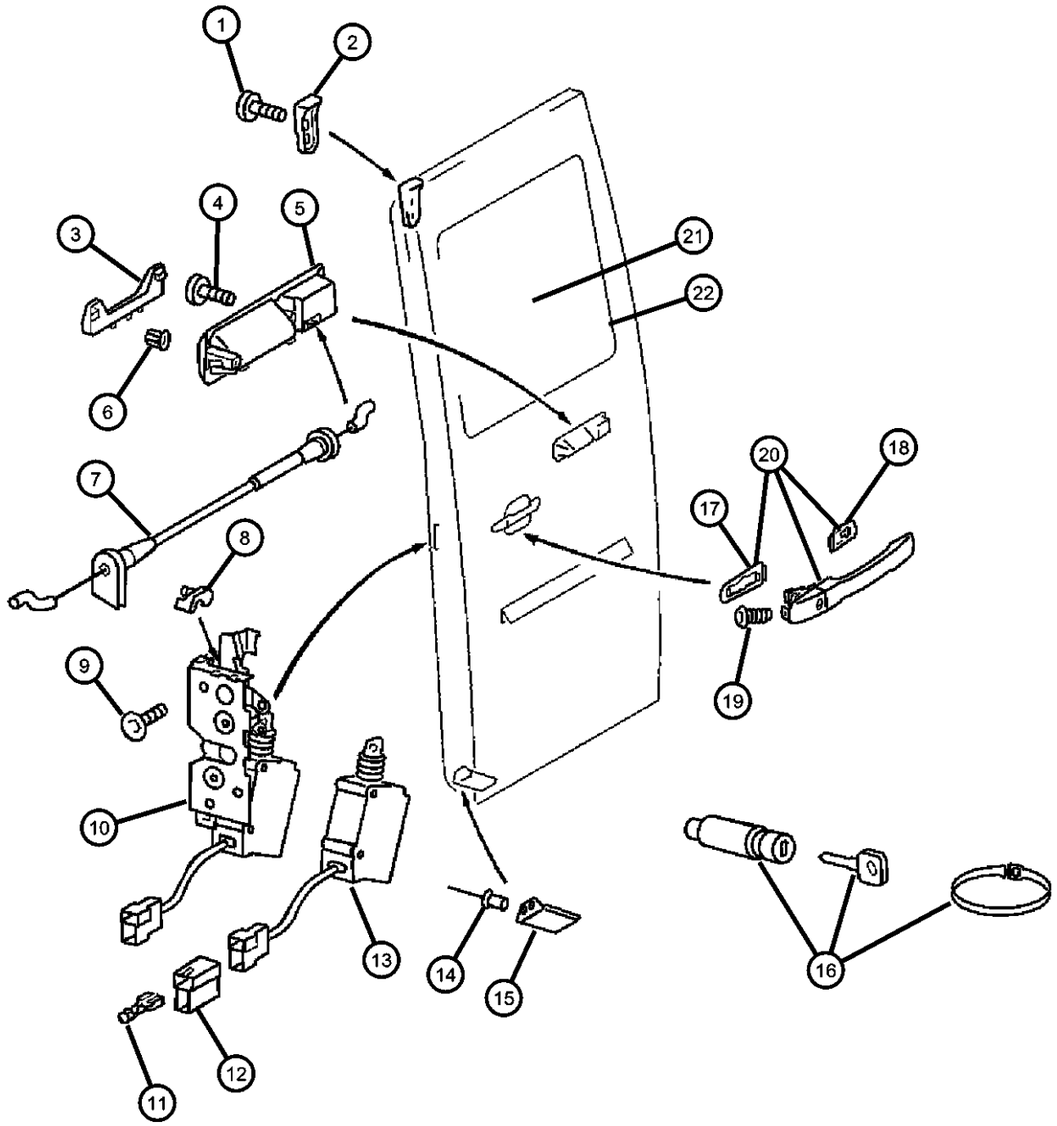

ITEM	PART NUMBER	QTY	LINE	SERIES	BODY	ENGINE	TRANS	TRIM	DESCRIPTION
13									SERVO, Mode Door
	05133998AA	1	3, 7	L	12, 15, 16				
		1	2, 6	L	11, 12, 14, 15, 16				
		1	2, 6	L	51, 52, 54, 55, 56				
14									RIVET
	05125819AA	2	2, 6	L	11, 12, 14, 15, 16				
		2	2, 6	L	51, 52, 54, 55, 56				
		2	3, 7	L	12, 15, 16				
15									SPACER, Door Lock Striker
	05123999AA	1	2, 6	L	11, 12, 14, 15, 16				
		1	2, 6	L	52, 54, 55, 56, 51				
		1	3, 7	L	12, 15, 16				
16									CYLINDER, Door Lock
	05133521AA	1	2, 6	L	11, 12, 14, 15, 16				
		1	2, 6	L	51, 52, 54, 55, 56				
		1	3, 7	L	12, 15, 16				
17									PAD
	05103673AA	1	2, 6	L	11, 12, 14, 15, 16				
		1	2, 6	L	51, 52, 54, 55, 56				
		1	3, 7	L	12, 15, 16				
18									PAD
	05103672AA	1	2, 6	L	11, 12, 14, 15, 16				
		1	3, 7	L	12, 15, 16				

SPRINTER (VA)

SERIES	LINE	BODY	ENGINE	TRANSMISSION
L = LOWLINE	3 = HD DODGE 2WD 6 = Lt. Duty DODGE 4WD 2 = Med. Duty DODGE 2WD 7 = Med. Duty DODGE 4WD	55 = Wagon 140" 54 = Wagon 118" 52 = Wagon 140" 51 = Wagon 118" 12 = Van 140" 11 = Van 118" 06 = Front Section 158" 14 = Van 118" 15 = Van 140" 16 = Van 158" 56 = Wagon 158" 01 = Chassis Forward Control 118" 02 = Chassis Forward Control 140"	EX8 = Engine-2.7L I5 Mercedes Turbo Diesel	DGJ = Transmission-5-Spd. Automatic,W5A580

Door, Cargo Glass And Hardware
Figure DVA-420

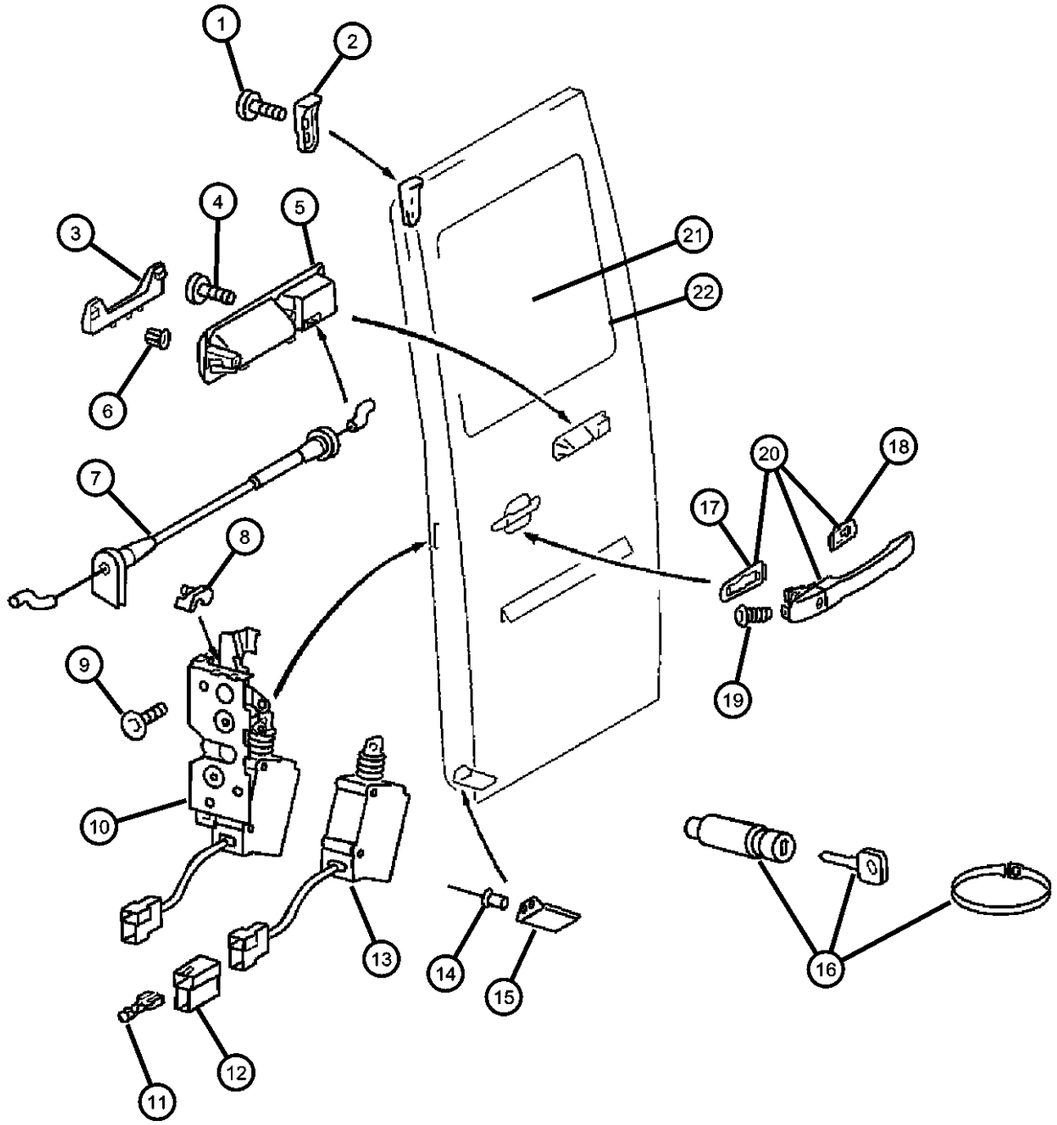

ITEM	PART NUMBER	QTY	LINE	SERIES	BODY	ENGINE	TRANS	TRIM	DESCRIPTION
		1	2, 6	L	51, 52, 54, 55, 56				
19									SCREW, Front Door Handle
	05125414AA	1	2, 6	L	11, 12, 14, 15, 16				
		1	2, 6	L	51, 52, 54, 55, 56				
		1	3, 7	L	12, 15, 16				
20									HANDLE, Front Door
	05124094AA	1	2, 6	L	11, 12, 14, 15, 16				
		1	2, 6	L	51, 52, 54, 55, 56				
		1	3, 7	L	12, 15, 16				
21									GLASS, Cargo Door
	05124006AA	1	2, 6	L	11, 12, 14, 15, 16				[GEM+GAQ,3FQ], Left
		1	2, 6	L	51, 52, 54, 55, 56				[GAQ,3FQ-GL8], Left
	05124008AA	1	3, 7	L	12, 15, 16				[GEM+GAQ,3FQ], Right
	05124014AA	1	2, 6	L	11, 12, 14, 15, 16				[GEM+GAQ,3FQ+GFA], Left
		1	2, 6	L	51, 52, 54, 55, 56				[GAQ,3FQ+GFA], Left
		1	3, 7	L	12, 15, 16				[GEM+GAQ,3FQ], Left
		1	2, 6	L	11, 12, 14, 15, 16				[GEM+GAQ,3FQ], Right
		1	2, 6	L	51, 52, 54, 55, 56				[GAQ,3FQ-GL8], Right
	05134318AA	1	2, 6	L	11, 12, 14, 15, 16				[GAQ,3FQ+GFA+GEM+GAE], Left
		1	2, 6	L	51, 52, 54, 55, 56				[GAQ,3FQ+GFA+GAE], Left
		1	3, 7	L	12, 15, 16				[GEM+GAQ,3FQ+GFA], Left
	05124016AA	1	2, 6	L	12, 14, 15, 16, 11				[GAQ,3FQ+GFA+GEM], Right

SPRINTER (VA)

SERIES	LINE	BODY	ENGINE	TRANSMISSION
L = LOWLINE	3 = HD DODGE 2WD 6 = Lt. Duty DODGE 4WD 2 = Med. Duty DODGE 2WD 7 = Med. Duty DODGE 4WD	55 = Wagon 140" 54 = Wagon 118" 52 = Wagon 140" 51 = Wagon 118" 12 = Van 140" 11 = Van 118" 06 = Front Section 158" 14 = Van 118" 15 = Van 140" 16 = Van 158" 56 = Wagon 158" 01 = Chassis Forward Control 118" 02 = Chassis Forward Control 140"	EX8 = Engine-2.7L I5 Mercedes Turbo Diesel	DGJ = Transmission-5-Spd. Automatic,W5A580

Door, Cargo Glass And Hardware
Figure DVA-420

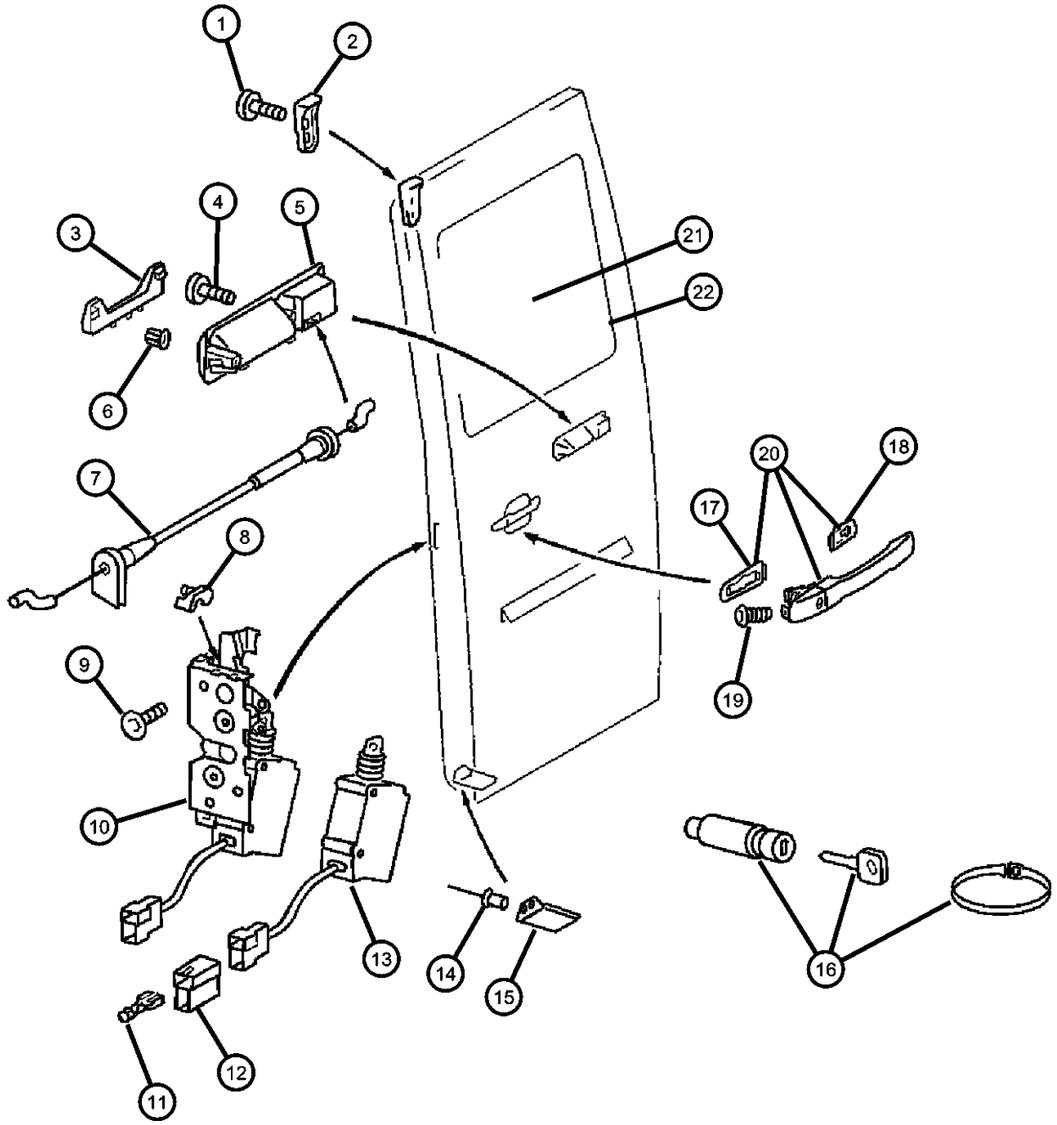

ITEM	PART NUMBER	QTY	LINE	SERIES	BODY	ENGINE	TRANS	TRIM	DESCRIPTION
		1	2, 6	L	51, 52, 54, 55, 56				[GAQ,3FQ+GFA], Right
		1	3, 7	L	12, 15, 16				[GAQ,3FQ+GFA+GEM], Right
	05134319AA	1	3, 7	L	12, 15, 16				[GAQ,3FQ+GEM+GAE], Left
		1	3, 7	L	12, 15, 16				[GAQ,3FQ+GFA+GEM+GAE], Left
		1	2, 6	L	11, 12, 14, 15, 16				[GAQ,3FQ+GEM+GAE], Left
		1	2, 6	L	51, 52, 54, 55, 56				[GAQ,3FQ+GAE-GL8], Left
	05134325AA	1	2, 6	L	11, 12, 14, 15, 16				[GAQ,3FQ+GEM+GAE], Right
	05134324AA	1	2, 6	L	11, 12, 14, 15, 16				[GAQ,3FQ+GFA+GEM+GAE], Right
		1	2, 6	L	51, 52, 54, 55, 56				[GAQ,3FQ+GFA+GAE], Right
		1	3, 7	L	12, 15, 16				[GAQ,3FQ+GFA+GEM+GAE], Right
		1	2, 6	L	51, 52, 54, 55, 56				[GAQ,3FQ+GAE-GL8], Right
		1	3, 7	L	12, 15, 16				[GAQ,3FQ+GEM+GAE], Right
22									WEATHERSTRIP, Cargo Door Glass
	05104364AA	1	2, 6	L	11, 12, 14, 15, 16				
		1	2, 6	L	51, 52, 54, 55, 56				
		1	3, 7	L	12, 15, 16				

SPRINTER (VA)

SERIES	LINE	BODY	ENGINE	TRANSMISSION
L = LOWLINE	3 = HD DODGE 2WD 6 = Lt. Duty DODGE 4WD 2 = Med. Duty DODGE 2WD 7 = Med. Duty DODGE 4WD	55 = Wagon 140" 54 = Wagon 118" 52 = Wagon 140" 51 = Wagon 118" 12 = Van 140" 11 = Van 118" 06 = Front Section 158" 14 = Van 118" 15 = Van 140" 16 = Van 158" 56 = Wagon 158" 01 = Chassis Forward Control 118" 02 = Chassis Forward Control 140"	EX8 = Engine-2.7L I5 Mercedes Turbo Diesel	DGJ = Transmission-5-Spd. Automatic,W5A580

Door, Cargo Lock And Control
Figure DVA-430

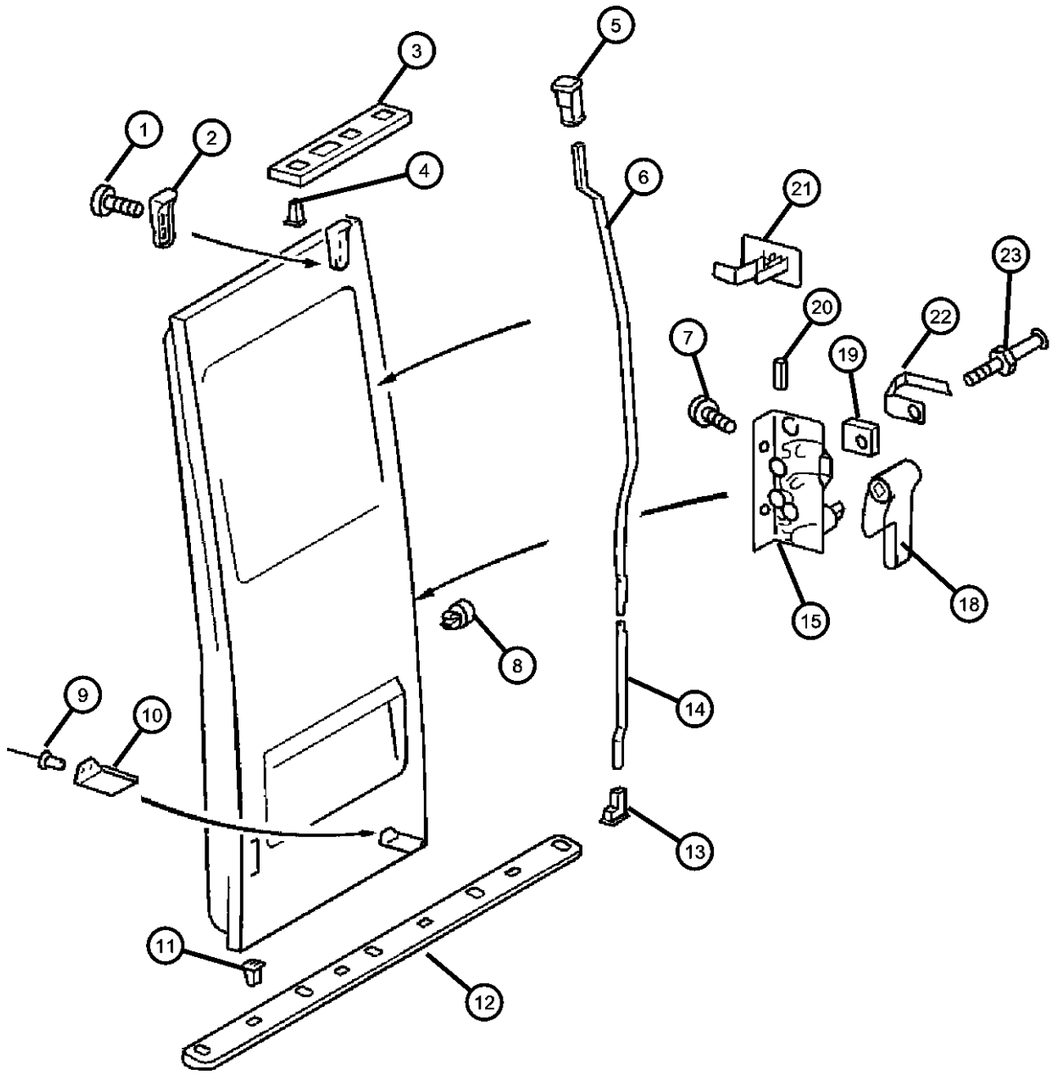

ITEM	PART NUMBER	QTY	LINE	SERIES	BODY	ENGINE	TRANS	TRIM	DESCRIPTION
1									SCREW
	06104142AA	4	2, 6	L	11, 12, 14, 15, 16				
		2	3, 7	L	12, 15, 16				
		2	2, 6	L	51, 52, 54, 55, 56				
2									SPACER, Door Lock Striker
	05123997AA	1	3, 7	L	12, 15, 16				
		1	2, 6	L	11, 12, 14, 15, 16				
		1	2, 6	L	51, 52, 54, 55, 56				
3									PLATE, Door Latch Striker
	05104428AA	1	2, 6	L	11, 12, 14, 15, 16				
		1	2, 6	L	51, 52, 54, 55, 56				
		1	3, 7	L	12, 15, 16				
4									RETAINER
	05104536AA	10	2, 6	L	14, 11, 12, 15, 16				
		10	2, 6	L	51, 52, 54, 55, 56				
		10	3, 7	L	12, 15, 16				
5									GUIDE
	05104384AA	1	2, 6	L	11, 12, 14, 15, 16				
		1	2, 6	L	51, 52, 54, 55, 56				
		1	3, 7	L	12, 15, 16				
6									ROD, Inside Handle to Latch
	05133928AA	1	3, 7	L	12, 15, 16				With Standard Roof
	05133929AA	1	2, 6	L	11, 12, 14, 15, 16				With High Roof

SPRINTER (VA)

SERIES	LINE	BODY	ENGINE	TRANSMISSION
L = LOWLINE	3 = HD DODGE 2WD 6 = Lt. Duty DODGE 4WD 2 = Med. Duty DODGE 2WD 7 = Med. Duty DODGE 4WD	55 = Wagon 140" 54 = Wagon 118" 52 = Wagon 140" 51 = Wagon 118" 12 = Van 140" 11 = Van 118" 06 = Front Section 158" 14 = Van 118" 15 = Van 140" 16 = Van 158" 56 = Wagon 158" 01 = Chassis Forward Control 118" 02 = Chassis Forward Control 140"	EX8 = Engine-2.7L I5 Mercedes Turbo Diesel	DGJ = Transmission-5-Spd. Automatic,W5A580

Door, Cargo Lock And Control
Figure DVA-430

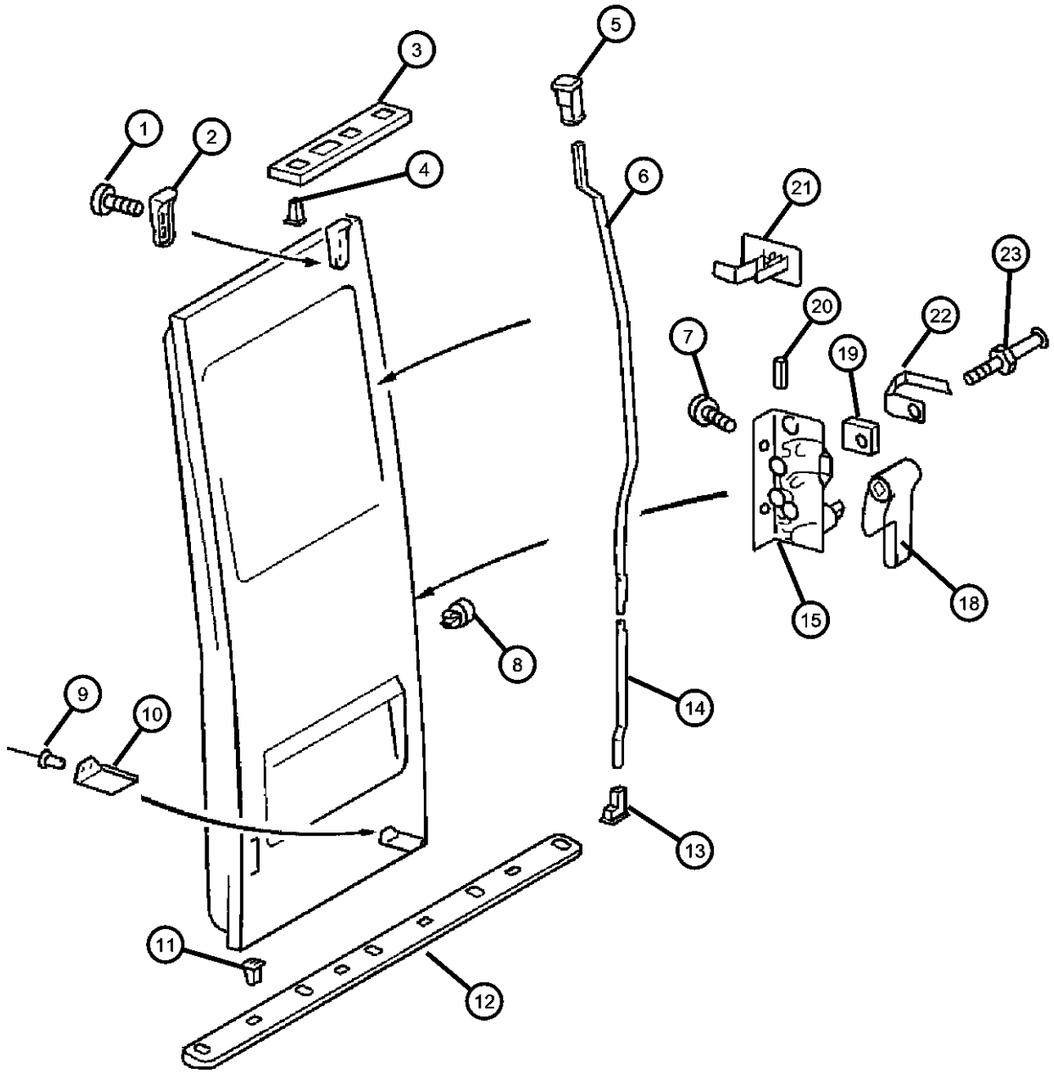

ITEM	PART NUMBER	QTY	LINE	SERIES	BODY	ENGINE	TRANS	TRIM	DESCRIPTION
		1	2, 6	L	51, 52, 54, 55, 56				With High Roof
		1	2, 6	L	11, 12, 14, 15, 16				With Standard Roof
		1	2, 6	L	51, 52, 54, 55, 56				With Standard Roof
		1	3, 7	L	12, 15, 16				With High Roof
7		1							SCREW, "ELECTRIC CHANGE-OVER VALVE TO BRACKET, M 6X12", SPRINTER, 05103722aa, (NOT SERVICED),
8									CLIP
	05125577AA	2	2, 6	L	11, 12, 14, 15, 16				
		2	2, 6	L	52, 51, 54, 55, 56				
		2	3, 7	L	12, 15, 16				
9									RIVET
	05125819AA	2	2, 6	L	11, 12, 14, 15, 16				
		2	2, 6	L	51, 52, 54, 55, 56				
		2	3, 7	L	12, 15, 16				
10									SPACER, Door Lock Striker
	05123997AA	1	2, 6	L	11, 12, 14, 15, 16				
		1	2, 6	L	51, 52, 54, 55, 56				
		1	3, 7	L	12, 15, 16				
11									RETAINER
	05104536AA	10	2, 6	L	11, 12, 14, 15, 16				
		10	2, 6	L	51, 52, 54, 55, 56				
		10	3, 7	L	12, 15, 16				

SPRINTER (VA)

SERIES	LINE	BODY	ENGINE	TRANSMISSION
L = LOWLINE	3 = HD DODGE 2WD 6 = Lt. Duty DODGE 4WD 2 = Med. Duty DODGE 2WD 7 = Med. Duty DODGE 4WD	55 = Wagon 140" 54 = Wagon 118" 52 = Wagon 140" 51 = Wagon 118" 12 = Van 140" 11 = Van 118" 06 = Front Section 158" 14 = Van 118" 15 = Van 140" 16 = Van 158" 56 = Wagon 158" 01 = Chassis Forward Control 118" 02 = Chassis Forward Control 140"	EX8 = Engine-2.7L I5 Mercedes Turbo Diesel	DGJ = Transmission-5-Spd. Automatic,W5A580

Door, Cargo Lock And Control
Figure DVA-430

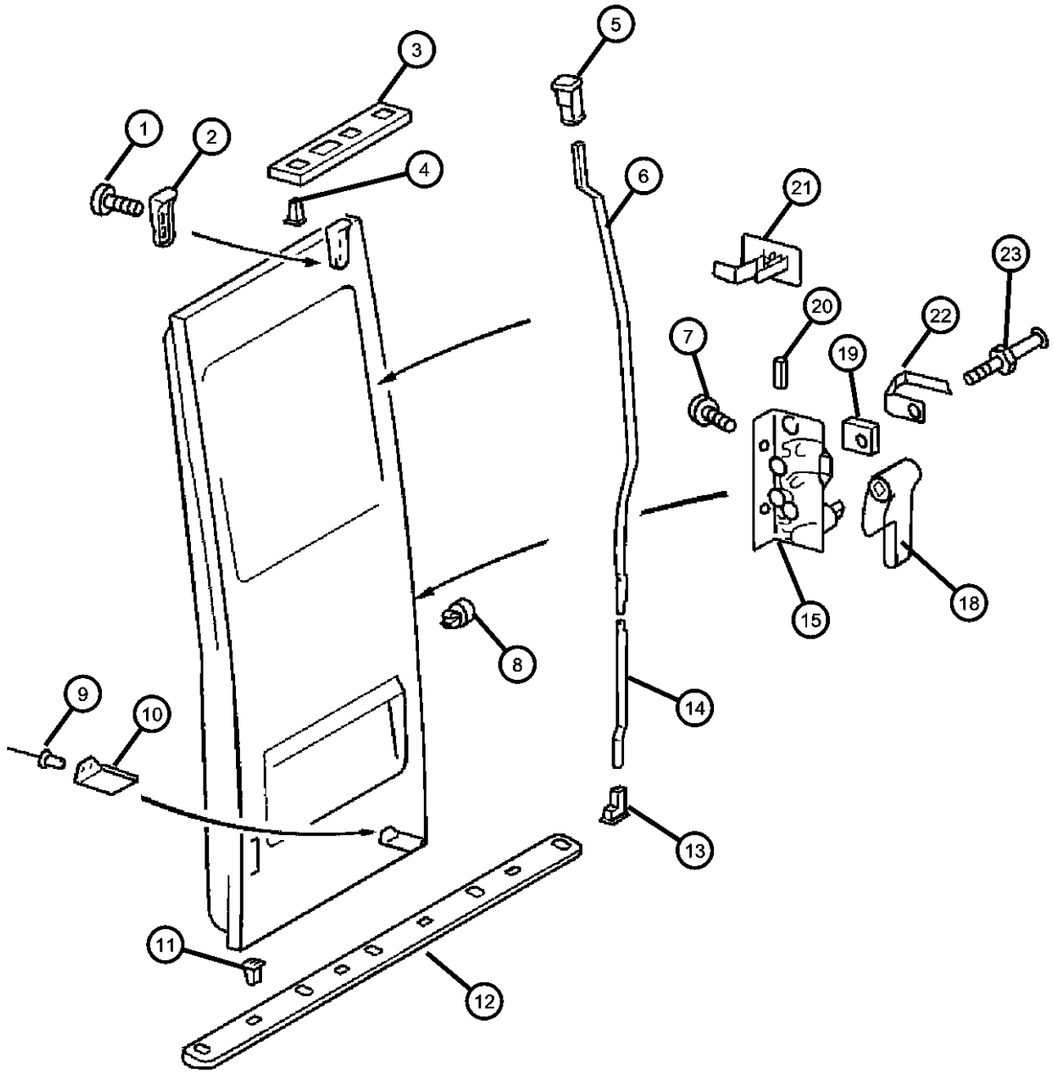

ITEM	PART NUMBER	QTY	LINE	SERIES	BODY	ENGINE	TRANS	TRIM	DESCRIPTION
12									PLATE, Door Latch Striker
	05104425AA	1	2, 6	L	11, 12, 14, 15, 16				
		1	2, 6	L	51, 52, 54, 55, 56				
		1	3, 7	L	12, 15, 16				
13									GUIDE
	05103959AA	1	2, 6	L	11, 12, 14, 15, 16				
		1	2, 6	L	51, 52, 54, 55, 56				
		1	3, 7	L	12, 15, 16				
14									ROD, Inside Handle to Latch
	05124000AA	1	2, 6	L	11, 12, 14, 15, 16				
		1	2, 6	L	55, 56, 51, 52, 54				
		1	3, 7	L	12, 15, 16				
15									LOCK, Rear Cargo Door
	05104368AA	1	2, 6	L	51, 52, 54, 55, 56				
		1	3, 7	L	12, 15, 16				
		1	2, 6	L	11, 12, 14, 15, 16				
-16									LATCH, Rear Door
	05104371AA	1	2, 6	L	11, 12, 14, 15, 16				
		1	2, 6	L	51, 52, 54, 55, 56				
		1	3, 7	L	12, 15, 16				
-17									LATCH, Rear Manual
	05104303AA	1	2, 6	L	11, 12, 14, 15, 16				Right
	05104339AA	1	2, 6	L	51, 52, 54, 55, 56				Right

SPRINTER (VA)

SERIES	LINE	BODY	ENGINE	TRANSMISSION
L = LOWLINE	3 = HD DODGE 2WD 6 = Lt. Duty DODGE 4WD 2 = Med. Duty DODGE 2WD 7 = Med. Duty DODGE 4WD	55 = Wagon 140" 54 = Wagon 118" 52 = Wagon 140" 51 = Wagon 118" 12 = Van 140" 11 = Van 118" 06 = Front Section 158" 14 = Van 118" 15 = Van 140" 16 = Van 158" 56 = Wagon 158" 01 = Chassis Forward Control 118" 02 = Chassis Forward Control 140"	EX8 = Engine-2.7L I5 Mercedes Turbo Diesel	DGJ = Transmission-5-Spd. Automatic,W5A580

Door, Cargo Lock And Control
Figure DVA-430

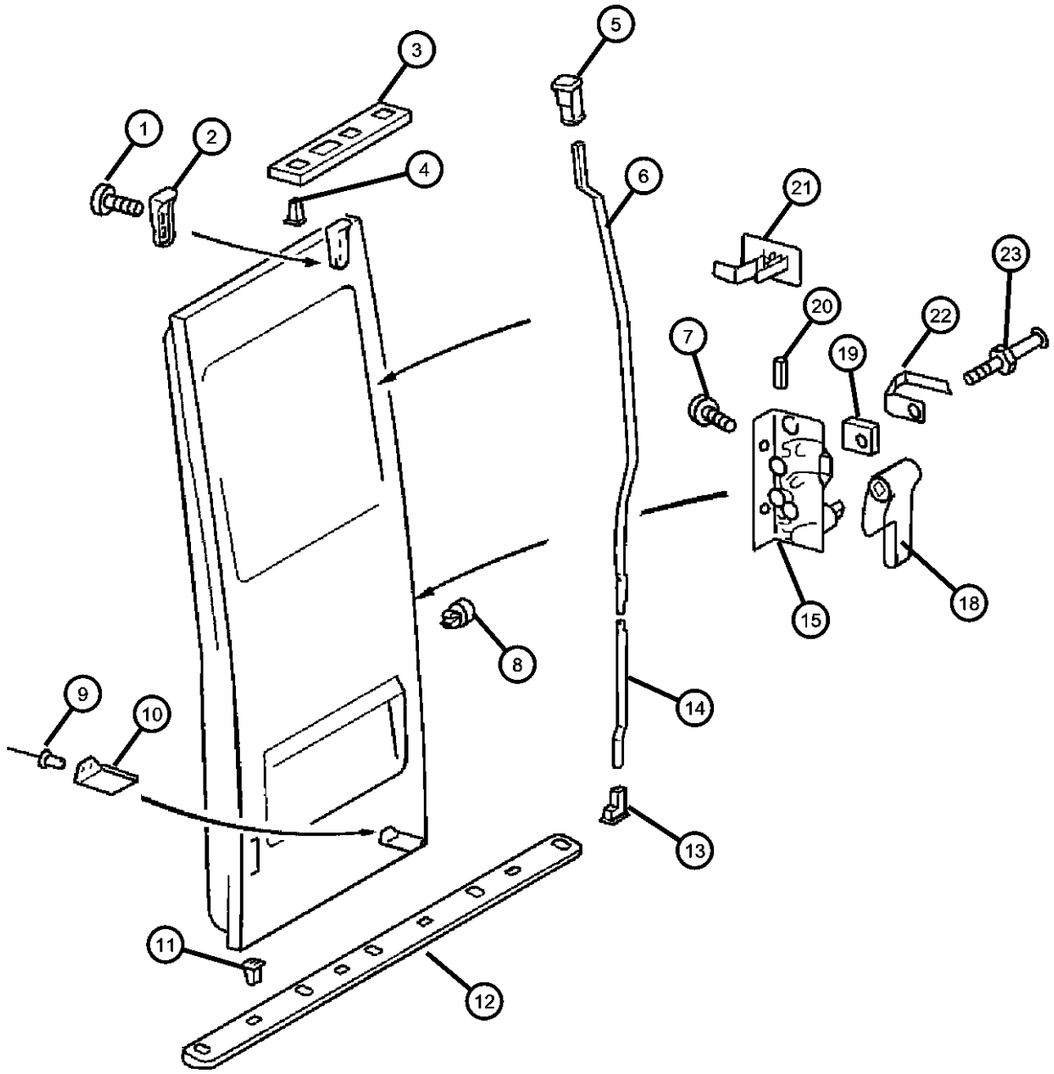

ITEM	PART NUMBER	QTY	LINE	SERIES	BODY	ENGINE	TRANS	TRIM	DESCRIPTION
		1	3, 7	L	12, 15, 16				Right
18									HANDLE, Inside Release
	05104383AA	1	2, 6	L	11, 12, 14, 15, 16				
		1	2, 6	L	51, 52, 54, 55, 56				
		1	3, 7	L	12, 15, 16				
19									NUT
	05103668AA	1	2, 6	L	11, 12, 14, 15, 16				
		1	2, 6	L	51, 52, 54, 55, 56				
		1	3, 7	L	12, 15, 16				
20									BUSHING
	05133930AA	1	2, 6	L	11, 12, 14, 15, 16				
		1	2, 6	L	51, 52, 54, 55, 56				
		1	3, 7	L	16, 12, 15				
21									GUIDE
	05104382AA	1	2, 6	L	11, 12, 14, 15, 16				
		1	2, 6	L	51, 52, 54, 55, 56				
		1	3, 7	L	12, 15, 16				
22									CLAMP
	05103670AA	1	2, 6	L	11, 12, 14, 15, 16				
		1	2, 6	L	51, 52, 54, 55, 56				
		1	3, 7	L	12, 15, 16				
23									PIN, Latch Striker
	05103669AA	1	2, 6	L	51, 52, 54, 55, 56				

SPRINTER (VA)

SERIES	LINE	BODY	ENGINE	TRANSMISSION
L = LOWLINE	3 = HD DODGE 2WD 6 = Lt. Duty DODGE 4WD 2 = Med. Duty DODGE 2WD 7 = Med. Duty DODGE 4WD	55 = Wagon 140" 54 = Wagon 118" 52 = Wagon 140" 51 = Wagon 118" 12 = Van 140" 11 = Van 118" 06 = Front Section 158" 14 = Van 118" 15 = Van 140" 16 = Van 158" 56 = Wagon 158" 01 = Chassis Forward Control 118" 02 = Chassis Forward Control 140"	EX8 = Engine-2.7L I5 Mercedes Turbo Diesel	DGJ = Transmission-5-Spd. Automatic,W5A580

Door, Cargo Lock And Control
Figure DVA-430

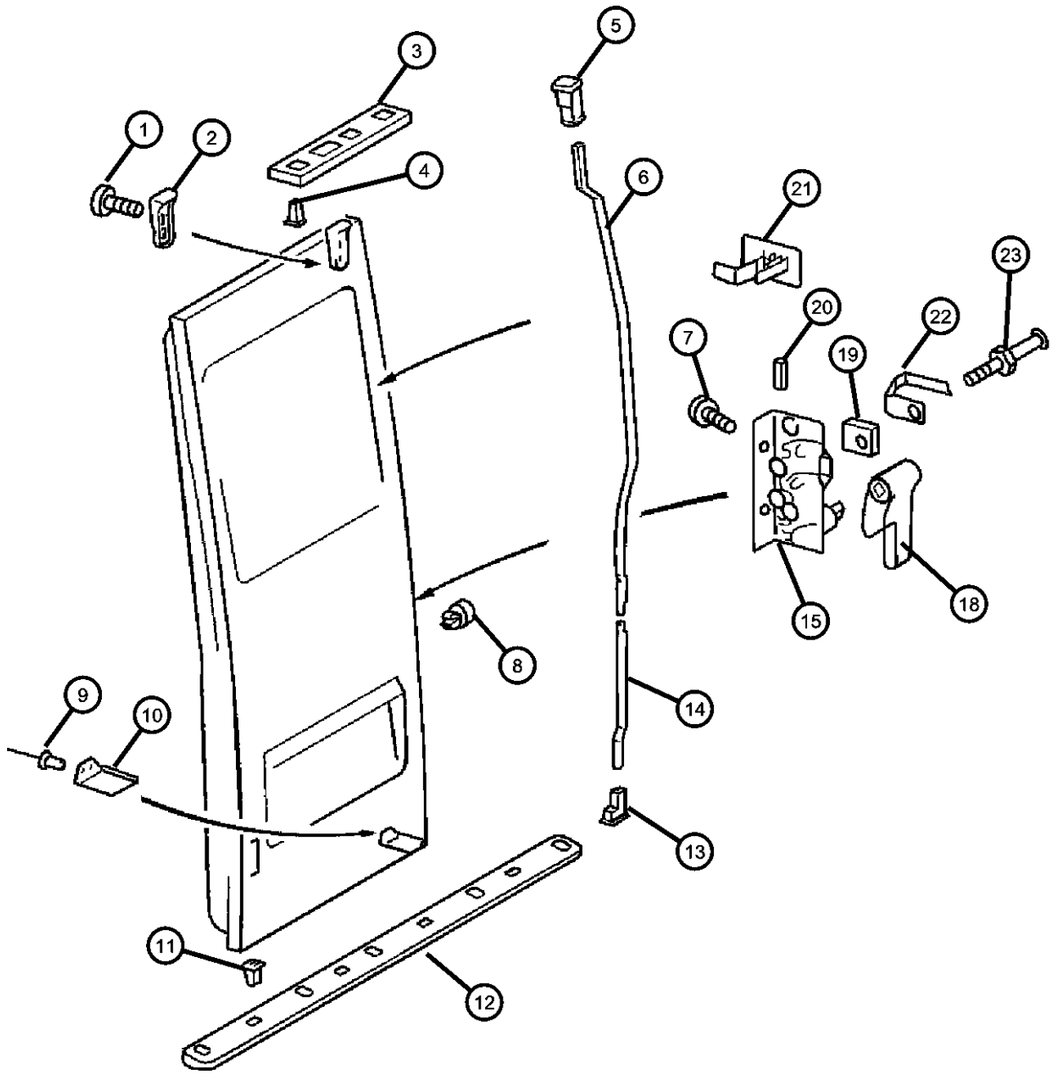

ITEM	PART NUMBER	QTY	LINE	SERIES	BODY	ENGINE	TRANS	TRIM	DESCRIPTION
		1	3, 7	L	12, 15, 16				
		1	2, 6	L	11, 12, 14, 15, 16				

SPRINTER (VA)

SERIES	LINE	BODY	ENGINE	TRANSMISSION
L = LOWLINE	3 = HD DODGE 2WD 6 = Lt. Duty DODGE 4WD 2 = Med. Duty DODGE 2WD 7 = Med. Duty DODGE 4WD	55 = Wagon 140" 54 = Wagon 118" 52 = Wagon 140" 51 = Wagon 118" 12 = Van 140" 11 = Van 118" 06 = Front Section 158" 14 = Van 118" 15 = Van 140" 16 = Van 158" 56 = Wagon 158" 01 = Chassis Forward Control 118" 02 = Chassis Forward Control 140"	EX8 = Engine-2.7L I5 Mercedes Turbo Diesel	DGJ = Transmission-5-Spd. Automatic,W5A580

Mirrors, Exterior
Figure DVA-520

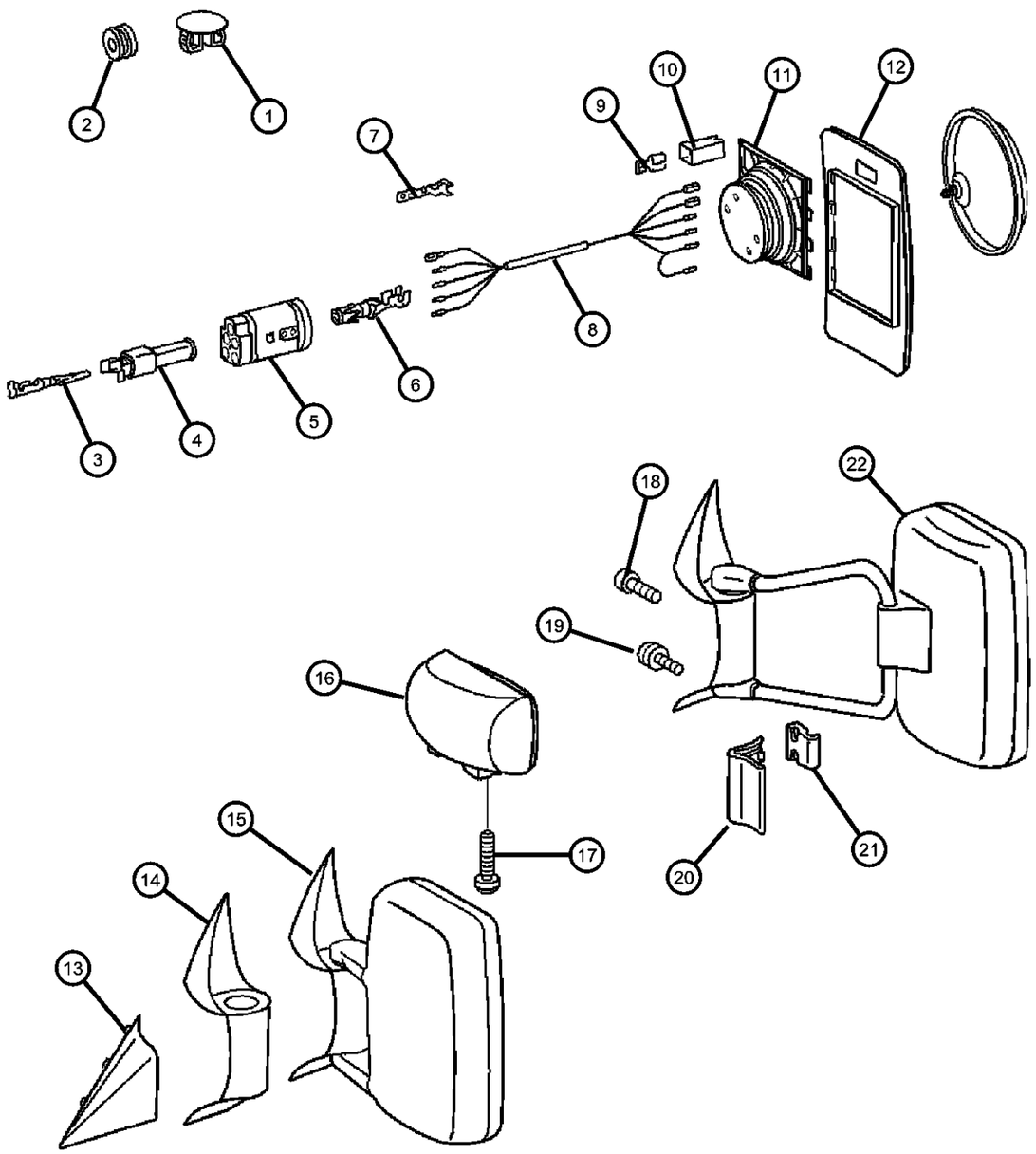

ITEM	PART NUMBER	QTY	LINE	SERIES	BODY	ENGINE	TRANS	TRIM	DESCRIPTION
1									PLUG
	05104032AA	1	3, 7	L	12, 15, 16				
		1	2, 6	L	11, 12, 14, 15, 16				
		1	2, 6	L	51, 52, 54, 55, 56				
2									GROMMET
	05125929AA	1	2, 6	L	11, 12, 14, 15, 16				
		1	3, 7	L	12, 15, 16				
		1	2, 6	L	51, 52, 54, 55, 56				
3	05133367AA	1	2, 6	L	51, 52, 54, 55, 56				PLUG
4									CONNECTOR
	05120744AA	1	2, 6	L	11, 12, 14, 15, 16				
		1	2, 6	L	51, 52, 54, 55, 56				
		1	3, 7	L	12, 15, 16				
5									PLUG
	05133508AA	1	2, 6	L	11, 12, 14, 15, 16				
		1	2, 6	L	51, 52, 54, 55, 56				
		1	3, 7	L	12, 15, 16				
6									TERMINAL
	05133509AA	5	3, 7	L	12, 15, 16				
		5	2, 6	L	11, 12, 14, 15, 16				
		5	2, 6	L	51, 52, 54, 55, 56				
7									TERMINAL, Male
	05133377AA	99	2, 6	L	01, 02, 06				

SPRINTER (VA)

SERIES	LINE	BODY	ENGINE	TRANSMISSION
L = LOWLINE	3 = HD DODGE 2WD 6 = Lt. Duty DODGE 4WD 2 = Med. Duty DODGE 2WD 7 = Med. Duty DODGE 4WD	55 = Wagon 140" 54 = Wagon 118" 52 = Wagon 140" 51 = Wagon 118" 12 = Van 140" 11 = Van 118" 06 = Front Section 158" 14 = Van 118" 15 = Van 140" 16 = Van 158" 56 = Wagon 158" 01 = Chassis Forward Control 118" 02 = Chassis Forward Control 140"	EX8 = Engine-2.7L I5 Mercedes Turbo Diesel	DGJ = Transmission-5-Spd. Automatic,W5A580

Mirrors, Exterior
Figure DVA-520

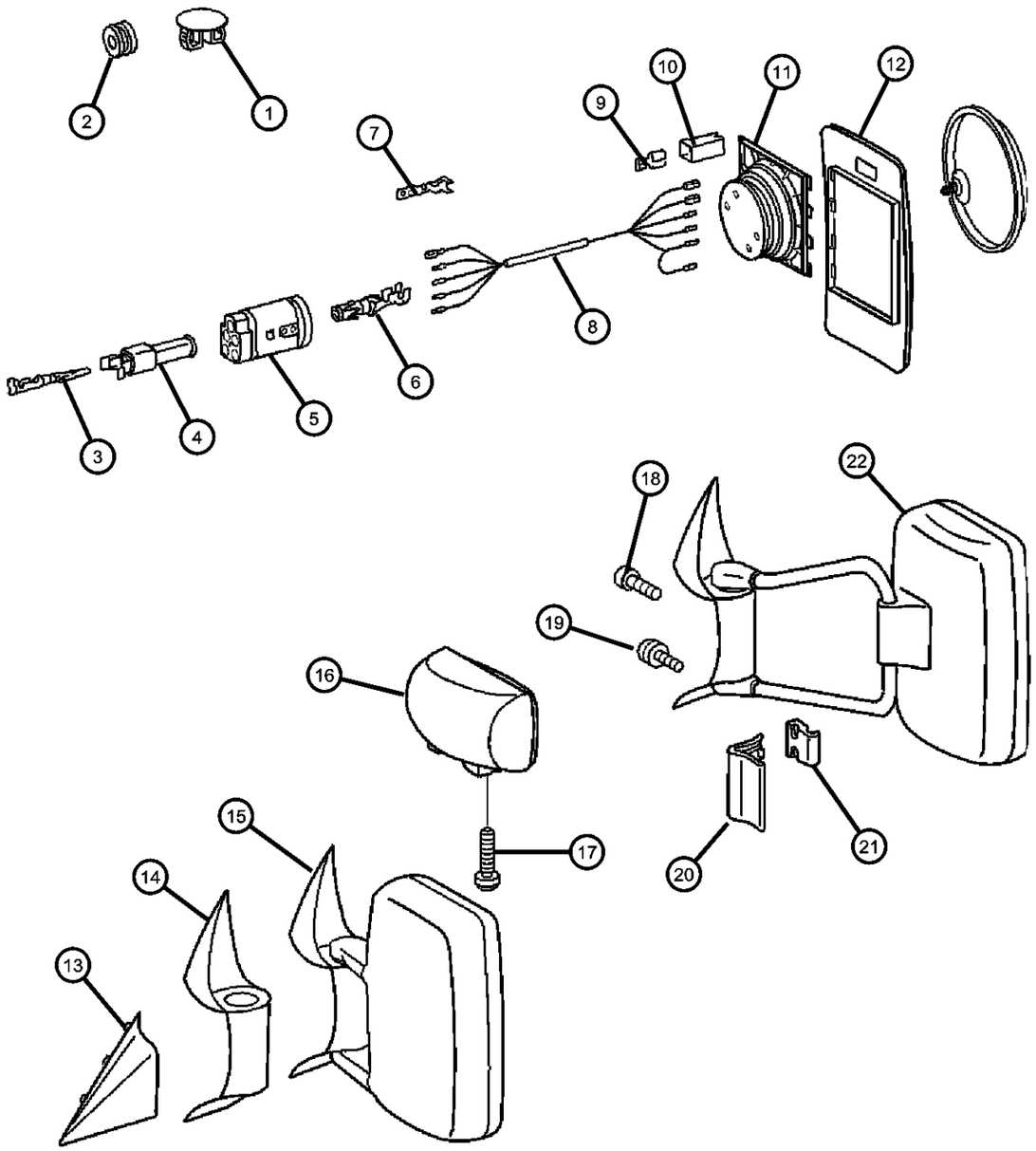

ITEM	PART NUMBER	QTY	LINE	SERIES	BODY	ENGINE	TRANS	TRIM	DESCRIPTION
		99	2, 6	L	11, 12, 14, 15, 16				
		99	2, 6	L	51, 52, 54, 55, 56				
		99	3, 7	L	12, 15, 16				
8									WIRING, Mirror Jumper
	05133502AA	1	2, 6	L	51, 52, 54, 55, 56				
		1	3, 7	L	12, 15, 16				
		1	2, 6	L	11, 12, 14, 15, 16				
	05133503AA	1	2, 6	L	11, 12, 14, 15, 16				[4E9,4XL]
		1	2, 6	L	51, 52, 54, 55, 56				[4E9,4XL]
9									PLUG
	05133367AA	1	2, 6	L	11, 12, 14, 15, 16				
		1	2, 6	L	51, 52, 54, 55, 56				
		1	3, 7	L	12, 15, 16				
10									TERMINAL
	05133504AA	1	2, 6	L	51, 52, 54, 55, 56				
		1	3, 7	L	12, 15, 16				
		1	2, 6	L	11, 12, 14, 15, 16				
11									MOTOR, Electric
	05133505AA	1	2, 6	L	11, 12, 14, 15, 16				
		1	2, 6	L	51, 52, 54, 55, 56				
		1	3, 7	L	12, 15, 16				
12									GLASS, Mirror Replacement
	05103757AA	1	2, 6	L	01, 02, 06				Right

SPRINTER (VA)

SERIES	LINE	BODY	ENGINE	TRANSMISSION
L = LOWLINE	3 = HD DODGE 2WD 6 = Lt. Duty DODGE 4WD 2 = Med. Duty DODGE 2WD 7 = Med. Duty DODGE 4WD	55 = Wagon 140" 54 = Wagon 118" 52 = Wagon 140" 51 = Wagon 118" 12 = Van 140" 11 = Van 118" 06 = Front Section 158" 14 = Van 118" 15 = Van 140" 16 = Van 158" 56 = Wagon 158" 01 = Chassis Forward Control 118" 02 = Chassis Forward Control 140"	EX8 = Engine-2.7L I5 Mercedes Turbo Diesel	DGJ = Transmission-5-Spd. Automatic,W5A580

Mirrors, Exterior
Figure DVA-520

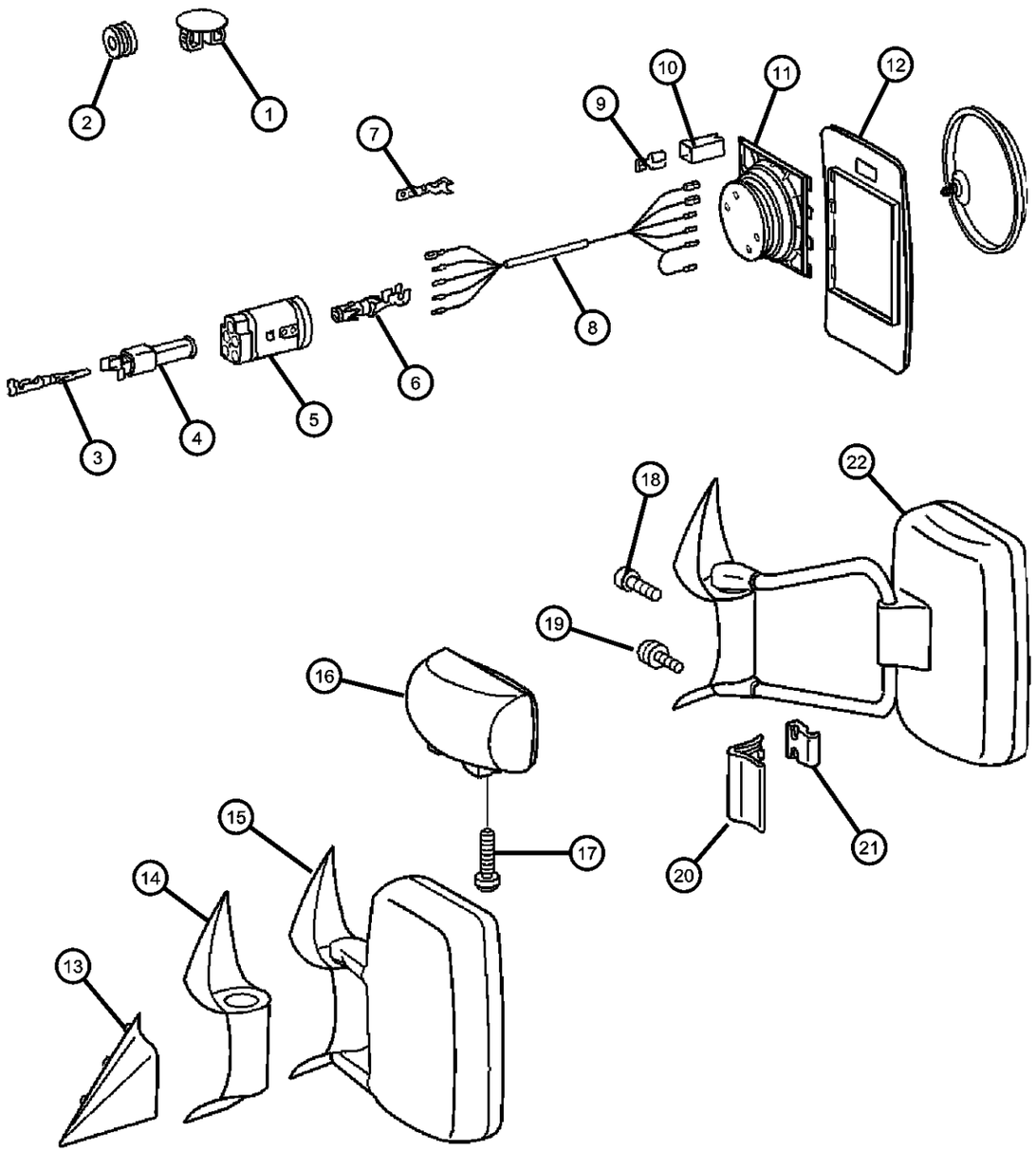

ITEM	PART NUMBER	QTY	LINE	SERIES	BODY	ENGINE	TRANS	TRIM	DESCRIPTION
		1	2, 6	L	11, 12, 14, 15, 16				Right
		1	2, 6	L	51, 52, 54, 55, 56				Right
	05103758AA	1	2, 6	L	11, 12, 14, 15, 16				Left
		1	2, 6	L	51, 52, 54, 55, 56				Left
		1	3, 7	L	12, 15, 16				Left
13									COVER, Mirror Flag
	05104444AA	1	2, 6	L	11, 12, 14, 15, 16				Left
	05104445AA	1	2, 6	L	11, 12, 14, 15, 16				Right
14									COVER, Mirror Flag
	05104446AA	1	2, 6	L	01, 02, 06				Left
		1	2, 6	L	11, 12, 14, 15, 16				Left
		1	2, 6	L	51, 52, 54, 55, 56				Left
		1	3, 7	L	12, 15, 16				Left
	05133499AA	1	2, 6	L	11, 12, 14, 15, 16				Right
		1	2, 6	L	51, 52, 54, 55, 56				Right
		1	3, 7	L	12, 15, 16				Right
15									MIRROR, Outside Rearview
	05104440AA	1	2, 6	L	01, 02, 06				[GTC], Left
		1	2, 6	L	11, 12, 14, 15, 16				[GTC], Left
		1	2, 6	L	51, 52, 54, 55, 56				[GTC], Left
	05104441AA	1	2, 6	L	01, 02, 06				[GTC], Right
		1	2, 6	L	11, 12, 14, 15, 16				[GTC], Right

SPRINTER (VA)

SERIES	LINE	BODY	ENGINE	TRANSMISSION
L = LOWLINE	3 = HD DODGE 2WD 6 = Lt. Duty DODGE 4WD 2 = Med. Duty DODGE 2WD 7 = Med. Duty DODGE 4WD	55 = Wagon 140" 54 = Wagon 118" 52 = Wagon 140" 51 = Wagon 118" 12 = Van 140" 11 = Van 118" 06 = Front Section 158" 14 = Van 118" 15 = Van 140" 16 = Van 158" 56 = Wagon 158" 01 = Chassis Forward Control 118" 02 = Chassis Forward Control 140"	EX8 = Engine-2.7L I5 Mercedes Turbo Diesel	DGJ = Transmission-5-Spd. Automatic,W5A580

Mirrors, Exterior
Figure DVA-520

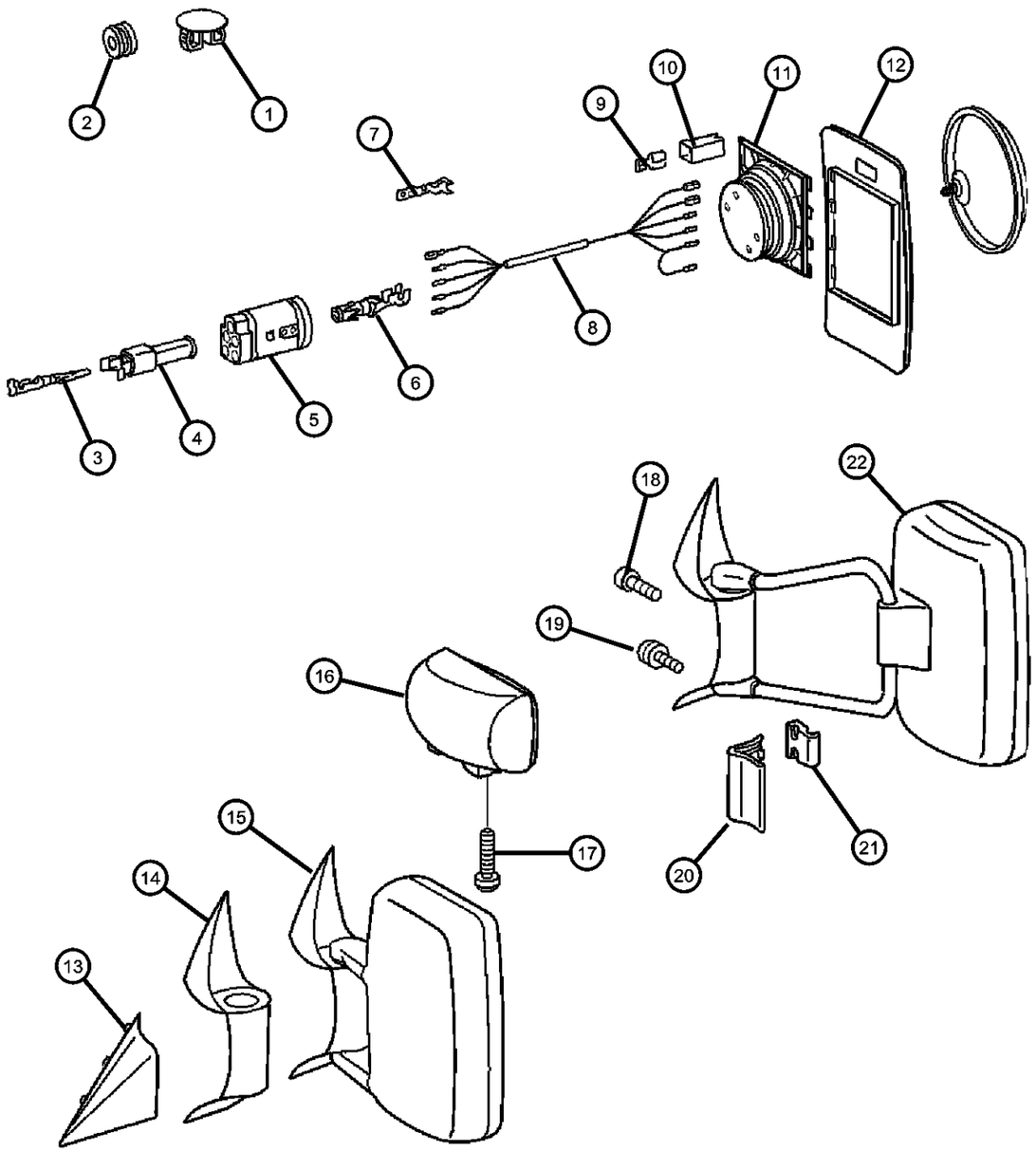

ITEM	PART NUMBER	QTY	LINE	SERIES	BODY	ENGINE	TRANS	TRIM	DESCRIPTION
		1	2, 6	L	51, 52, 54, 55, 56				[GTC], Right
		1	3, 7	L	12, 15, 16				[GTC], Right
	05124184AA	1	2, 6	L	01, 02, 06				[GTB], Left
		1	3, 7	L	12, 15, 16				[GTC], Left
		1	3, 7	L	12, 15, 16				[GTB], Left
	05124196AA	1	2, 6	L	01, 02, 06				[GTB], Right
		1	2, 6	L	11, 12, 14, 15, 16				[GTB], Right
		1	2, 6	L	51, 52, 54, 55, 56				[GTB], Right
		1	3, 7	L	02, 06				[GTB], Right
		1	3, 7	L	12, 15, 16				[GTB], Right
	05140544AA	1	2, 6	L	01, 02, 06				[GYB]
		1	2, 6	L	11, 12, 14, 15, 16				[GYB]
		1	2, 6	L	11, 12, 14, 15, 16				[GTB], Left
		1	2, 6	L	51, 52, 54, 55, 56				[GTB], Left
		1	3, 7	L	02, 06				[GTB], Left
		1	3, 7	L	02, 06				[GYB]
		1	3, 7	L	12, 15, 16				[GYB]
16									MIRROR, Outside Rearview
	05103592AA	1	2, 6	L	11, 12, 14, 15, 16				Left
		1	2, 6	L	51, 52, 54, 55, 56				Left
		1	3, 7	L	12, 15, 16				Left
	05103593AA	1	2, 6	L	11, 12, 14, 15, 16				Right
		1	2, 6	L	51, 52, 54, 55, 56				Right

SPRINTER (VA)

SERIES	LINE	BODY	ENGINE	TRANSMISSION
L = LOWLINE	3 = HD DODGE 2WD 6 = Lt. Duty DODGE 4WD 2 = Med. Duty DODGE 2WD 7 = Med. Duty DODGE 4WD	55 = Wagon 140" 54 = Wagon 118" 52 = Wagon 140" 51 = Wagon 118" 12 = Van 140" 11 = Van 118" 06 = Front Section 158" 14 = Van 118" 15 = Van 140" 16 = Van 158" 56 = Wagon 158" 01 = Chassis Forward Control 118" 02 = Chassis Forward Control 140"	EX8 = Engine-2.7L I5 Mercedes Turbo Diesel	DGJ = Transmission-5-Spd. Automatic,W5A580

Mirrors, Exterior
Figure DVA-520

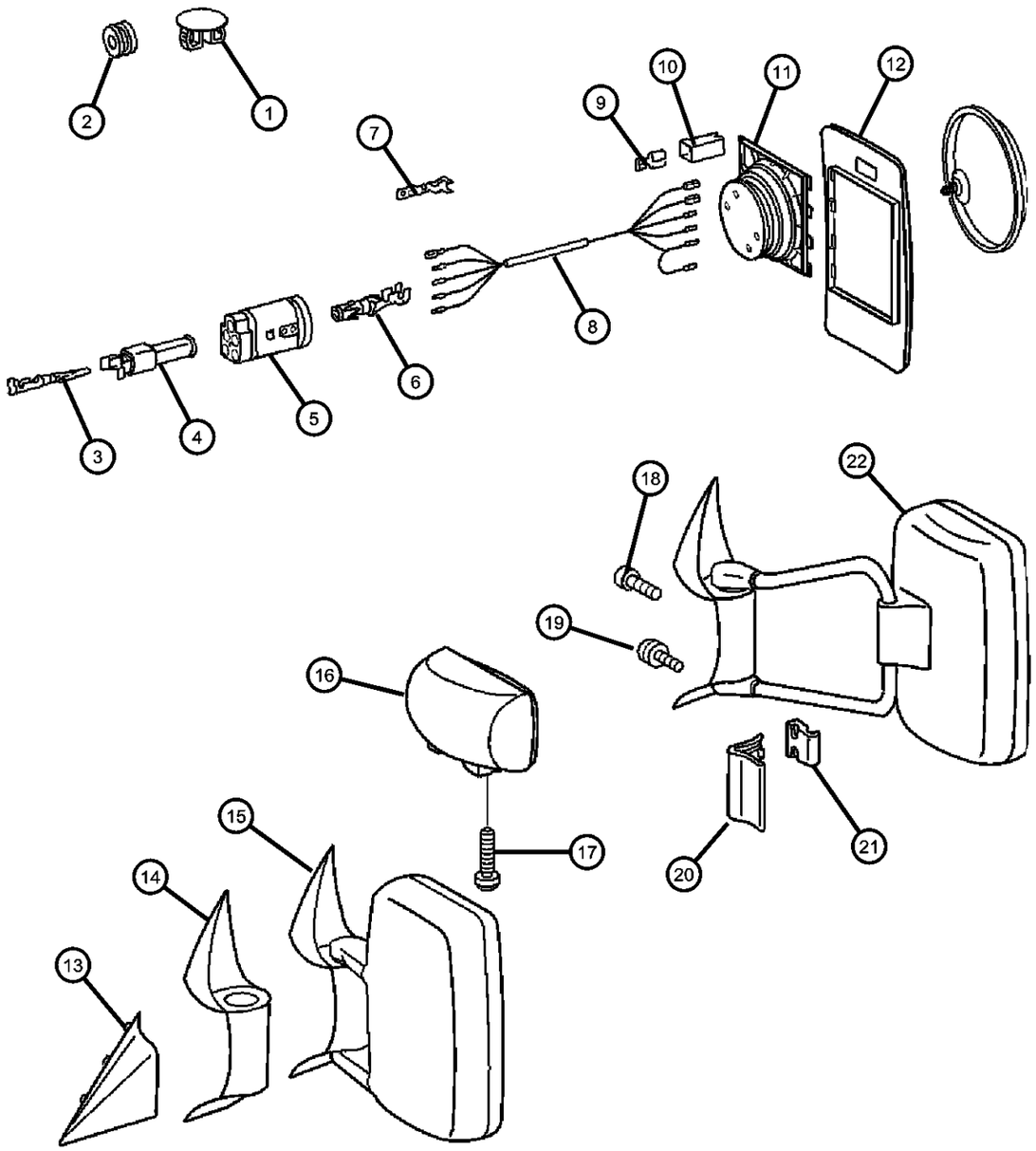

ITEM	PART NUMBER	QTY	LINE	SERIES	BODY	ENGINE	TRANS	TRIM	DESCRIPTION
		1	3, 7	L	12, 15, 16				Right
17	05133507AA	1	3, 7	L	12, 15, 16				SCREW
18									BOLT, Torx
	05125420AA	1	2, 6	L	01, 02, 06				
		1	2, 6	L	11, 12, 14, 15, 16				
		1	2, 6	L	51, 52, 54, 55, 56				
19									SCREW
	05104610AA	2	2, 6	L	51, 52, 54, 55, 56				
		2	2, 6	L	11, 12, 14, 15, 16				
		2	3, 7	L	12, 15, 16				
20									COVER, Mirror Flag
	05103675AA	1	2, 6	L	01, 02, 06				
		1	2, 6	L	11, 12, 14, 15, 16				
		1	2, 6	L	51, 52, 54, 55, 56				
		1	3, 7	L	12, 15, 16				
21									CLAMP
	05133500AA	2	2, 6	L	51, 52, 54, 55, 56				
		2	3, 7	L	12, 15, 16				
		2	2, 6	L	01, 02, 06				
		2	2, 6	L	11, 12, 14, 15, 16				
22									MIRROR, Outside Rearview
	05103594AA	1	2, 6	L	01, 02, 06				[XZD+4XS] Or [XZD+4XS], Left
		1	3, 7	L	02, 06				[XZD+4XS] Or [XZD+4XS], Left
	05124233AA	1	3, 7	L	02, 06				[GTB+XZD+4XS] Or [GTB+XZD+4XS], Left

SPRINTER (VA)

SERIES	LINE	BODY	ENGINE	TRANSMISSION
L = LOWLINE	3 = HD DODGE 2WD 6 = Lt. Duty DODGE 4WD 2 = Med. Duty DODGE 2WD 7 = Med. Duty DODGE 4WD	55 = Wagon 140" 54 = Wagon 118" 52 = Wagon 140" 51 = Wagon 118" 12 = Van 140" 11 = Van 118" 06 = Front Section 158" 14 = Van 118" 15 = Van 140" 16 = Van 158" 56 = Wagon 158" 01 = Chassis Forward Control 118" 02 = Chassis Forward Control 140"	EX8 = Engine-2.7L I5 Mercedes Turbo Diesel	DGJ = Transmission-5-Spd. Automatic,W5A580

Mirrors, Exterior
Figure DVA-520

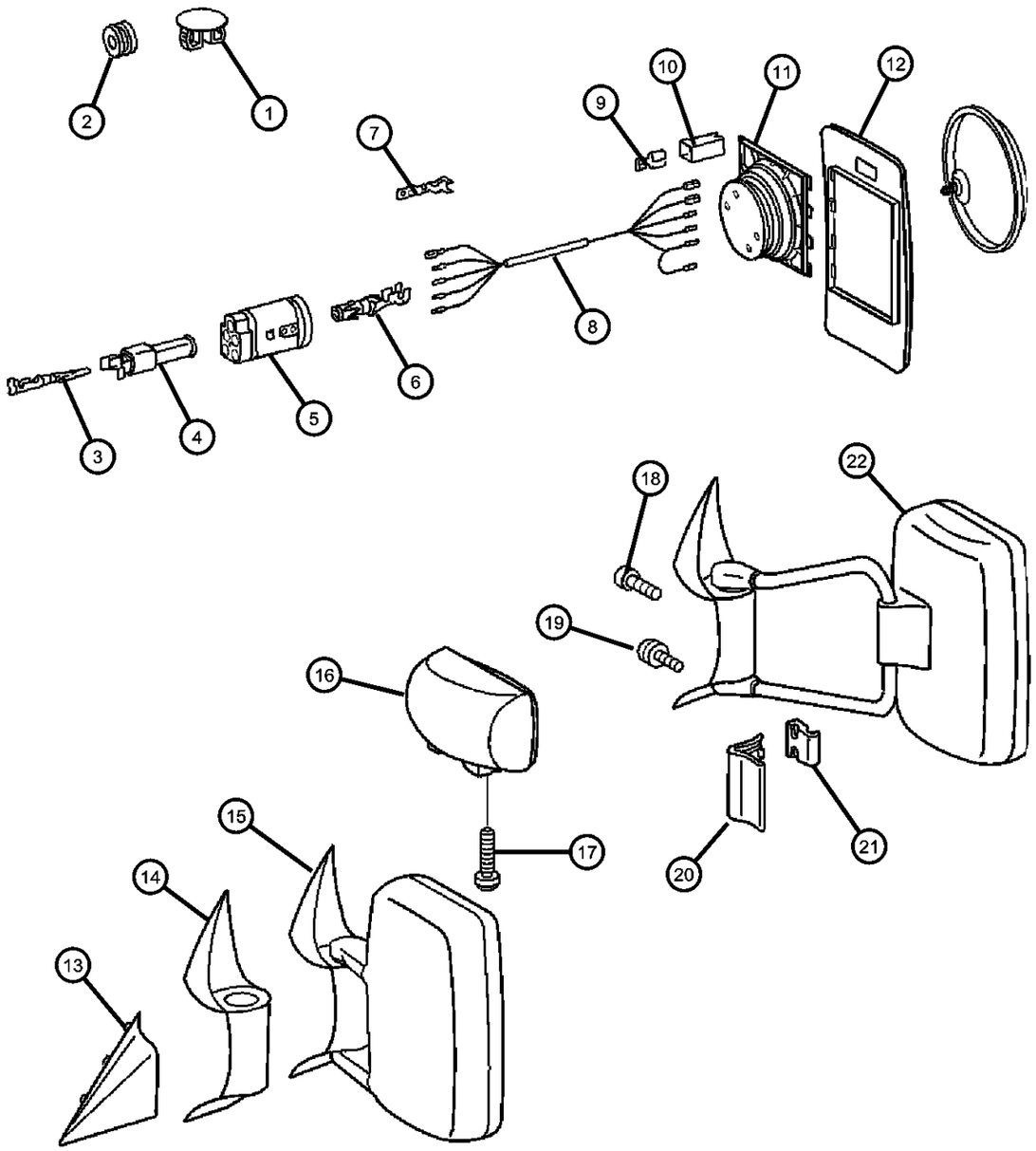

ITEM	PART NUMBER	QTY	LINE	SERIES	BODY	ENGINE	TRANS	TRIM	DESCRIPTION
	05124235AA	1	2, 6	L	01, 02, 06				[GTB+XZD+4XS] Or [GTB+XZD+4XS], Right
	05103595AA	1	2, 6	L	01, 02, 06				[XZD+4XS] Or [XZD+4XS], Right
		1	3, 7	L	02, 06				[XZD+4XS] Or [XZD+4XS], Right
		1	2, 6	L	01, 02, 06				[GTB+XZD+4XS] Or [GTB+XZD+4XS], Left
		1	3, 7	L	02, 06				[GTB+XZD+4XS] Or [GTB+XZD+4XS], Right
	05124237AA	1	2, 6	L	01, 02, 06				[XZE+4XS] Or [XZE+4XS], Left
		1	3, 7	L	02, 06				[XZE+4XS] Or [XZE+4XS], Left
	05124239AA	1	2, 6	L	01, 02, 06				[XZE+4XS] Or [XZE+4XS], Right
		1	3, 7	L	02, 06				[XZE+4XS] Or [XZE+4XS], Right
	05124241AA	1	2, 6	L	01, 02, 06				[GTB+XZE+4XS] Or [GTB+XZE+4XS], Left
		1	3, 7	L	02, 06				[GTB+XZE+4XS] Or [GTB+XZE+4XS], Left
	05124243AA	1	2, 6	L	01, 02, 06				[GTB+XZE+4XS] Or [GTB+XZE+4XS], Right
		1	3, 7	L	02, 06				[GTB+XZE+4XS] Or [GTB+XZE+4XS], Right
	05124251AA	1	2, 6	L	01, 02, 06				[LEG+GTB]+[4Z1,4XS]+[4E9], Left
		1	2, 6	L	11, 12, 14, 15, 16				[LEG+GTB]+[4Z1,4XS]+[4E9], Left
	05124255AA	1	2, 6	L	11, 12, 14, 15, 16				[LEG+GTB]+[4Z1,4XS]+[4E9], Right
		1	2, 6	L	51, 52, 54, 55, 56				[LEG+GTB]+[4Z1,4XS]+[4E9], Right
		1	2, 6	L	51, 52, 54, 55, 56				[LEG+GTB]+[4Z1,4XS]+[4E9], Left
		1	3, 7	L	12, 15, 16				[LEG+GTB]+[4Z1,4XS], Left
		1	2, 6	L	01, 02, 06				[LEG+GTB]+[4Z1,4XS]+[4E9], Right
	05124259AA	1	3, 7	L	12, 15, 16				[LEG-GTB]+[4Z1,4XS], Left
	05124261AA	1	2, 6	L	01, 02, 06				[LEG-GTB]+[4Z1,4XS]+[4E9], Right

SPRINTER (VA)

SERIES	LINE	BODY	ENGINE	TRANSMISSION
L = LOWLINE	3 = HD DODGE 2WD 6 = Lt. Duty DODGE 4WD 2 = Med. Duty DODGE 2WD 7 = Med. Duty DODGE 4WD	55 = Wagon 140" 54 = Wagon 118" 52 = Wagon 140" 51 = Wagon 118" 12 = Van 140" 11 = Van 118" 06 = Front Section 158" 14 = Van 118" 15 = Van 140" 16 = Van 158" 56 = Wagon 158" 01 = Chassis Forward Control 118" 02 = Chassis Forward Control 140"	EX8 = Engine-2.7L I5 Mercedes Turbo Diesel	DGJ = Transmission-5-Spd. Automatic,W5A580

Mirrors, Exterior
Figure DVA-520

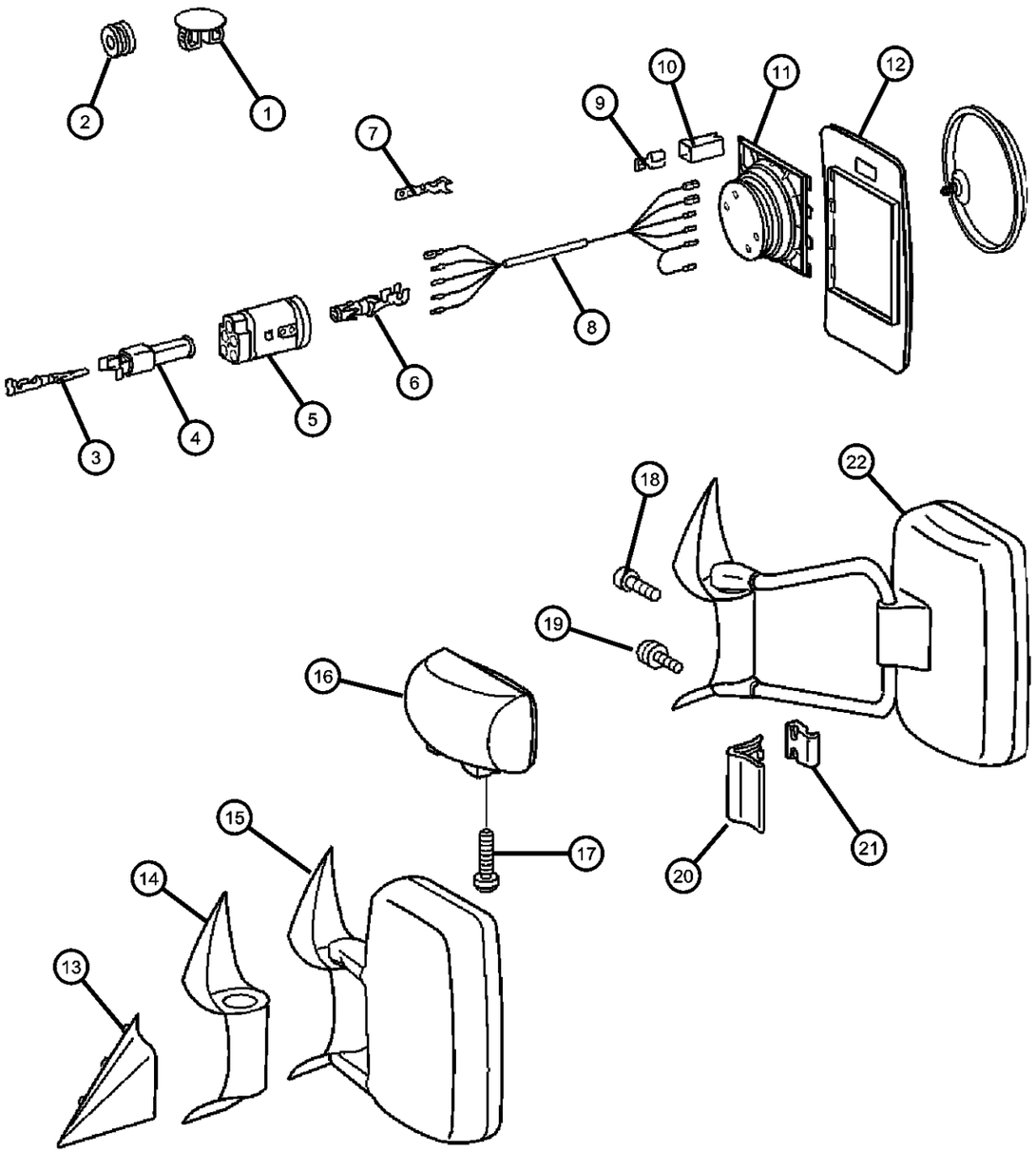

ITEM	PART NUMBER	QTY	LINE	SERIES	BODY	ENGINE	TRANS	TRIM	DESCRIPTION
		1	3, 7	L	12, 15, 16				[LEG+GTB]+[4Z1,4XS], Right
		1	2, 6	L	01, 02, 06				[LEG-GTB]+[4Z1,4XS]+[4E9], Left
		1	2, 6	L	11, 12, 14, 15, 16				[LEG-GTB]+[4Z1,4XS]+[4E9], Left
		1	2, 6	L	51, 52, 54, 55, 56				[LEG-GTB]+[4Z1,4XS]+[4E9], Left
		1	2, 6	L	11, 12, 14, 15, 16				[LEG-GTB]+[4Z1,4XS]+[4E9], Right
		1	2, 6	L	51, 52, 54, 55, 56				[LEG-GTB]+[4Z1,4XS]+[4E9], Right
		1	3, 7	L	12, 15, 16				[LEG-GTB]+[4Z1,4XS], Right

SPRINTER (VA)

SERIES	LINE	BODY	ENGINE	TRANSMISSION
L = LOWLINE	3 = HD DODGE 2WD 6 = Lt. Duty DODGE 4WD 2 = Med. Duty DODGE 2WD 7 = Med. Duty DODGE 4WD	55 = Wagon 140" 54 = Wagon 118" 52 = Wagon 140" 51 = Wagon 118" 12 = Van 140" 11 = Van 118" 06 = Front Section 158" 14 = Van 118" 15 = Van 140" 16 = Van 158" 56 = Wagon 158" 01 = Chassis Forward Control 118" 02 = Chassis Forward Control 140"	EX8 = Engine-2.7L I5 Mercedes Turbo Diesel	DGJ = Transmission-5-Spd. Automatic,W5A580

Group - EVA

Exterior Ornamentation

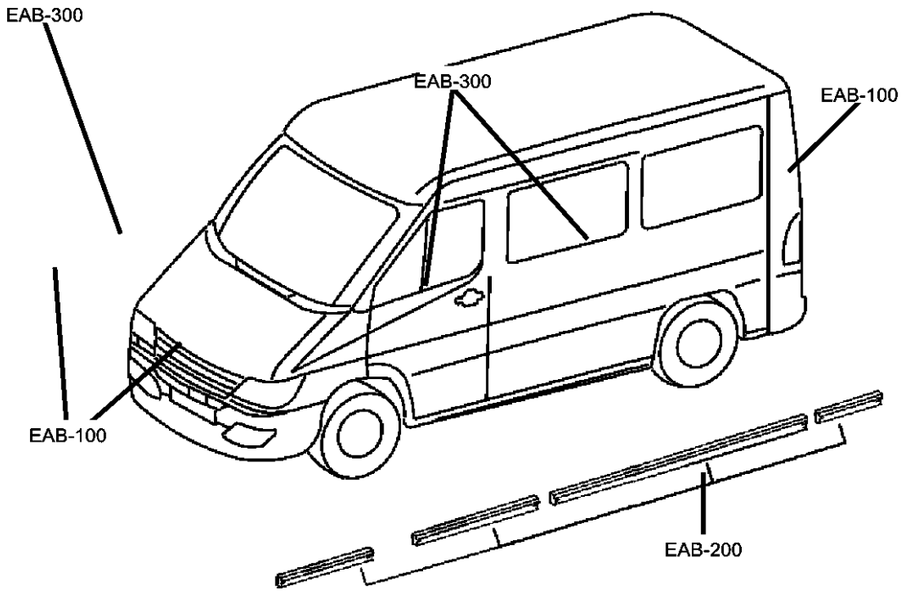

EVA-100 Nameplates 	**EVA-200** Moldings and Ornamentation 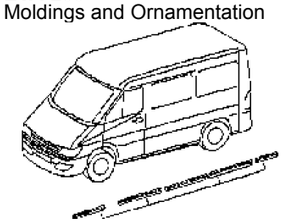		

Group - EVA Exterior Ornamentation

Illustration Title — Group-Fig. No.

Nameplates
Nameplates And Decals ..... Fig. EVA - 120

Moldings and Ornamentation
Exterior Moldings ..... Fig. EVA - 210

Nameplates And Decals
Figure EVA-120

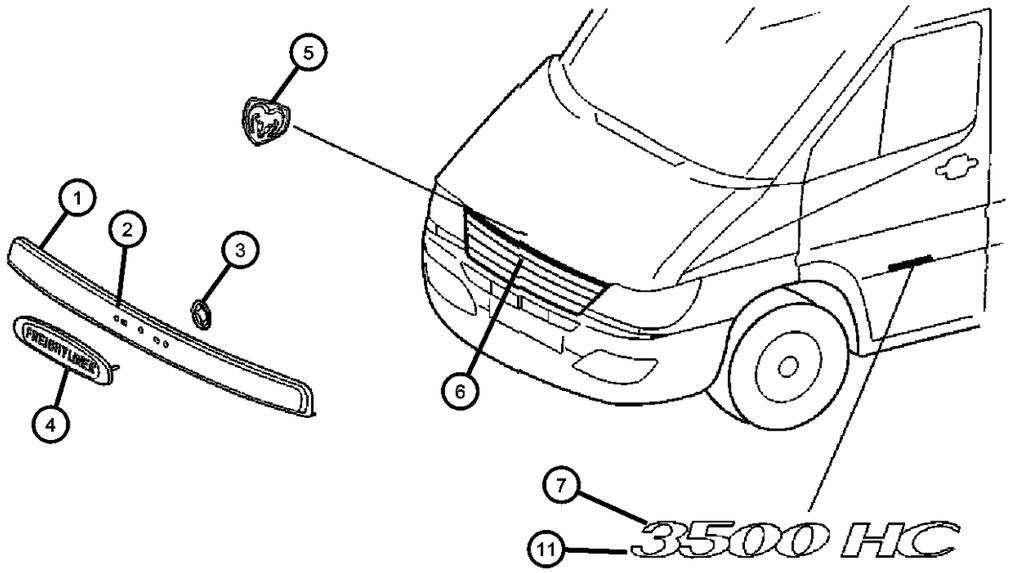

ITEM	PART NUMBER	QTY	LINE	SERIES	BODY	ENGINE	TRANS	TRIM	DESCRIPTION

NOTE:For [Dodge Sprinter] Aplications Dealer Must Remove The [‘Ram‘] Portion Of The Name Plate Prior To Instalation On The Vehicle. [Sprinter] Is Identified As A [2500, 3500] Not [Ram 2500, Ram 3500].
Line Code [2 & 3] Are For [Dodge Sprinter] Only
Line Code [6 & 7] Are For [Freightliner Sprinter] Only
Sales Codes:

1									MOLDING, Hood, DODGE
	05114372AA	1	2	L	01, 02, 06				
		1	2	L	11, 12, 14, 15, 16				
		1	2	L	51, 52, 54, 55, 56				
		1	3	L	02, 06				
		1	3	L	12, 15, 16				
2									MOLDING, Hood, FREIGHTLINER
	05104400AA	1	6	L	11, 12, 14, 15, 16				
		1	6	L	51, 52, 54, 55, 56				
		1	7	L	12, 15, 16				
3									RETAINER, Hood Ornament
	05096429AA	2	2, 6	L	11, 12, 14, 15, 16				
		2	2, 6	L	51, 52, 54, 55, 56				
		2	2, 6	L	01, 02, 06				
		2	3, 7	L	02, 06				
		2	3, 7	L	12, 15, 16				
4									NAMEPLATE, Hood
	05104449AA	1	6	L	01, 02, 06				
		1	6	L	11, 12, 14, 15, 16				
		1	6	L	51, 52, 54, 55, 56				
		1	7	L	12, 15, 16				

SPRINTER (VA)

SERIES	LINE	BODY	ENGINE	TRANSMISSION
L = LOWLINE	3 = HD DODGE 2WD 6 = Lt. Duty DODGE 4WD 2 = Med. Duty DODGE 2WD 7 = Med. Duty DODGE 4WD	55 = Wagon 140" 54 = Wagon 118" 52 = Wagon 140" 51 = Wagon 118" 12 = Van 140" 11 = Van 118" 06 = Front Section 158" 14 = Van 118" 15 = Van 140" 16 = Van 158" 56 = Wagon 158" 01 = Chassis Forward Control 118" 02 = Chassis Forward Control 140"	EX8 = Engine-2.7L I5 Mercedes Turbo Diesel	DGJ = Transmission-5-Spd. Automatic,W5A580

Nameplates And Decals
Figure EVA-120

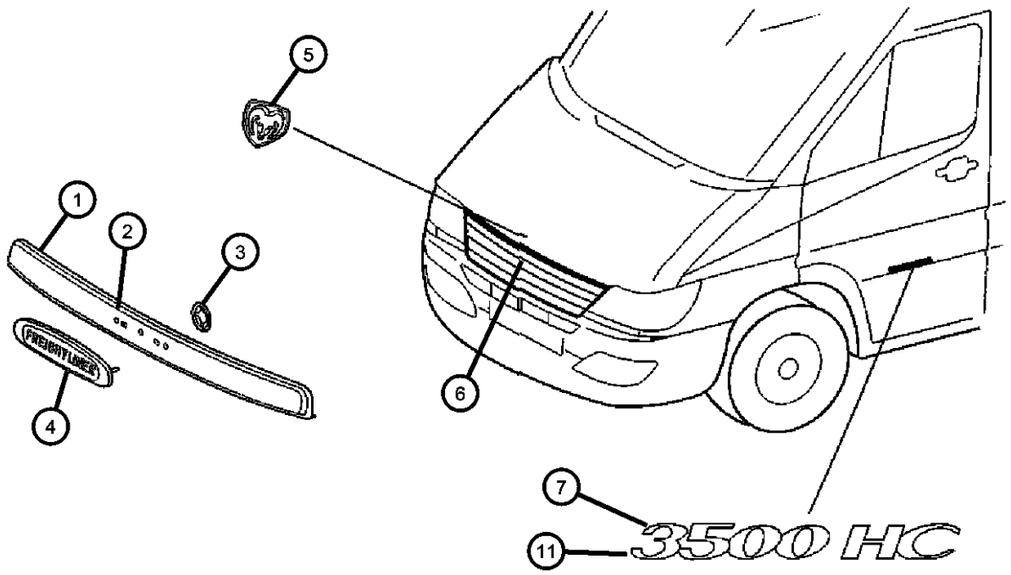

ITEM	PART NUMBER	QTY	LINE	SERIES	BODY	ENGINE	TRANS	TRIM	DESCRIPTION
5									MEDALLION, Ram Head
	52851538AA	1	2	L	01, 02, 06				
		1	2	L	11, 12, 14, 15, 16				
		1	2	L	51, 52, 54, 55, 56				
		1	3	L	02, 06				
		1	3	L	12, 15, 16				
6		1							GRILLE, Radiator, See Group 7, (NOT SERVICED)
7									NAMEPLATE
	05124314AA	2	7	L	12, 15, 16				[3500 SHC] With [MWJ + MGQ]
	05124315AA	2	7	L	12, 15, 16				[3500 HC] With [MGQ]
	05124316AA	2	7	L	02, 06				[3500 C] With [MGQ]
	05132136AA	2	6	L	51, 52, 54, 55, 56				[2500 SHC] With [MWJ + MGQ]
	05132137AA	2	6	L	11, 12				[2500 HC] With MGQ]
-8									NAMEPLATE, Rear Door
	05104454AA	1	2, 6	L	51, 52, 54, 55, 56				SPRINTER
		1	3, 7	L	12, 15, 16				SPRINTER
-9									NAMEPLATE, Dodge
	55077300AA	1	2	L	01, 02, 06				Rear Door
		1	2	L	11, 12, 14, 15, 16				Rear Door
		1	2	L	51, 52, 54, 55, 56				Rear Door
		1	3	L	02, 06				Rear Door
		1	3	L	12, 15, 16				Rear Door
-10									NAMEPLATE, Powered By Mercedes
	05124317AA	2	6	L	01, 02, 06				[MGQ]

SPRINTER (VA)

SERIES	LINE	BODY	ENGINE	TRANSMISSION
L = LOWLINE	3 = HD DODGE 2WD 6 = Lt. Duty DODGE 4WD 2 = Med. Duty DODGE 2WD 7 = Med. Duty DODGE 4WD	55 = Wagon 140" 54 = Wagon 118" 52 = Wagon 140" 51 = Wagon 118" 12 = Van 140" 11 = Van 118" 06 = Front Section 158" 14 = Van 118" 15 = Van 140" 16 = Van 158" 56 = Wagon 158" 01 = Chassis Forward Control 118" 02 = Chassis Forward Control 140"	EX8 = Engine-2.7L I5 Mercedes Turbo Diesel	DGJ = Transmission-5-Spd. Automatic,W5A580

Nameplates And Decals
Figure EVA-120

ITEM	PART NUMBER	QTY	LINE	SERIES	BODY	ENGINE	TRANS	TRIM	DESCRIPTION
		2	6	L	11, 12, 14, 15, 16				[MGQ]
		2	6	L	51, 52, 54, 55, 56				[MGQ]
		2	7	L	12, 15, 16				[MGQ]
		2	7	L	02, 06				[MGQ]
11	55077331AB	2	2	L	01, 02, 06				NAMEPLATE, [2500]

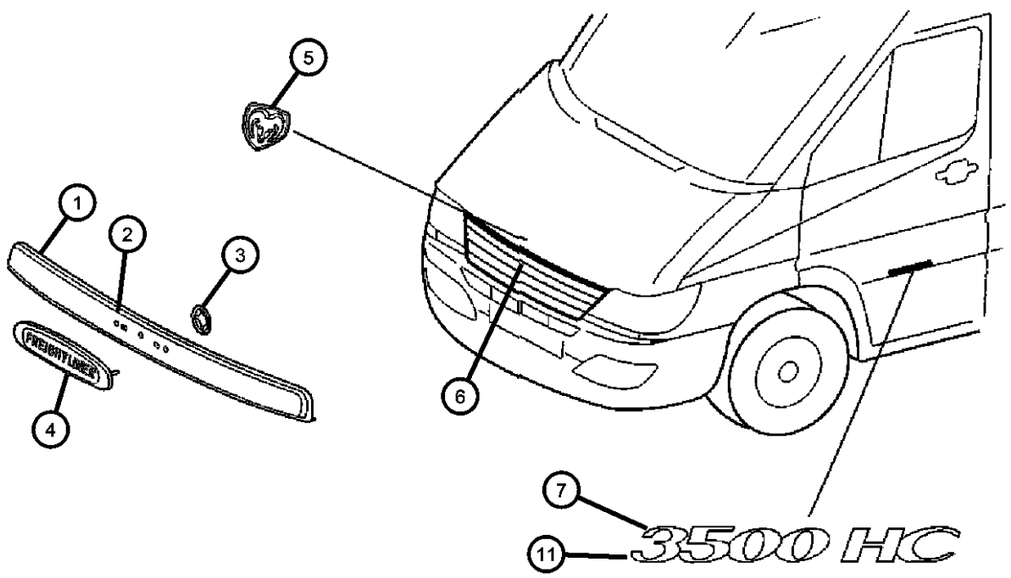

SPRINTER (VA)

SERIES	LINE	BODY	ENGINE	TRANSMISSION
L = LOWLINE	3 = HD DODGE 2WD 6 = Lt. Duty DODGE 4WD 2 = Med. Duty DODGE 2WD 7 = Med. Duty DODGE 4WD	55 = Wagon 140" 54 = Wagon 118" 52 = Wagon 140" 51 = Wagon 118" 12 = Van 140" 11 = Van 118" 06 = Front Section 158" 14 = Van 118" 15 = Van 140" 16 = Van 158" 56 = Wagon 158" 01 = Chassis Forward Control 118" 02 = Chassis Forward Control 140"	EX8 = Engine-2.7L I5 Mercedes Turbo Diesel	DGJ = Transmission-5-Spd. Automatic,W5A580

Exterior Moldings
Figure EVA-210

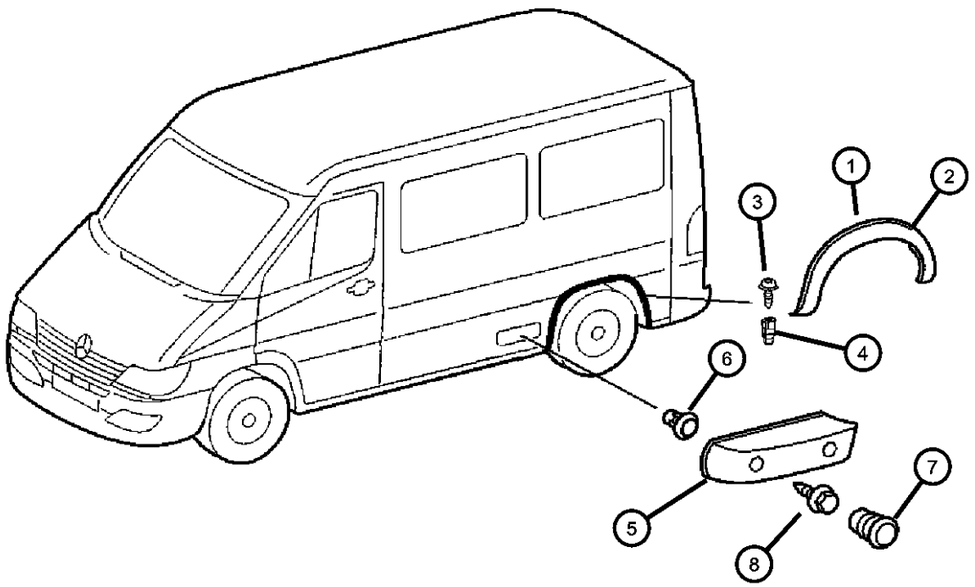

ITEM	PART NUMBER	QTY	LINE	SERIES	BODY	ENGINE	TRANS	TRIM	DESCRIPTION
NOTE:									
Line Code [2 & 3] Are For [Dodge Sprinter] Only									
Line Code [6 & 7] Are For [Freightliner] Only									
Sales Codes:									
1									MOLDING, Wheel Opening Flare
	05132499AA	2	2, 6	L	11, 12, 14, 15, 16				
		2	2, 6	L	51, 52, 54, 55, 56				
2	05125142AA	2	3, 7	L	12, 15, 16				MOLDING, Wheel Opening Flare
3									SCREW
	06104614AA	16	2, 6	L	51, 52, 54, 55, 56				
		16	2, 6	L	11, 12, 14, 15, 16				
4									NUT, Plastic Snap-in
	05098837AA	16	2, 6	L	11, 12, 14, 15, 16				
		16	2, 6	L	51, 52, 54, 55, 56				
5									MOLDING, Quarter Trim
	05123563AA	1	3, 7	L	12, 15, 16				Left
	05123564AA	1	3, 7	L	12, 15, 16				Right
6	05125550AA	4	3, 7	L	12, 15, 16				RETAINER
7	05126001AA	4	3, 7	L	12, 15, 16				PLUG, Cover
8	06104614AA	16	3, 7	L	12, 15, 16				SCREW
-9	05104639AA	16	3, 7	L	12, 15, 16				WASHER

SPRINTER (VA)

SERIES	LINE	BODY	ENGINE	TRANSMISSION
L = LOWLINE	3 = HD DODGE 2WD 6 = Lt. Duty DODGE 4WD 2 = Med. Duty DODGE 2WD 7 = Med. Duty DODGE 4WD	55 = Wagon 140" 54 = Wagon 118" 52 = Wagon 140" 51 = Wagon 118" 12 = Van 140" 11 = Van 118" 06 = Front Section 158" 14 = Van 118" 15 = Van 140" 16 = Van 158" 56 = Wagon 158" 01 = Chassis Forward Control 118" 02 = Chassis Forward Control 140"	EX8 = Engine-2.7L I5 Mercedes Turbo Diesel	DGJ = Transmission-5-Spd. Automatic,W5A580

Group - IVA

Interior Trim

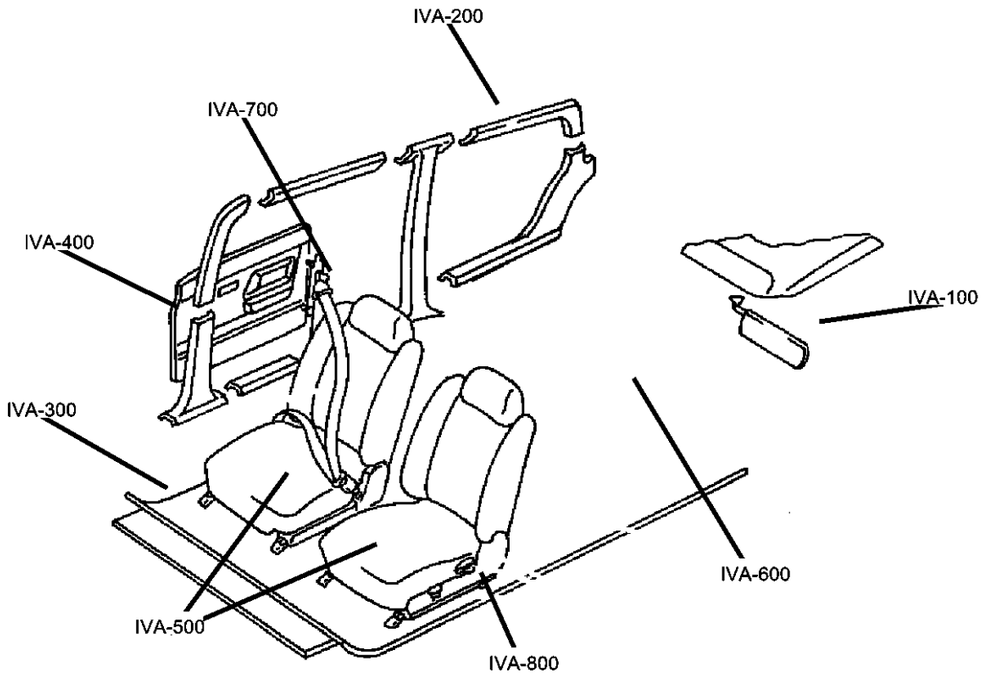

IVA-100 Headliner and Visor 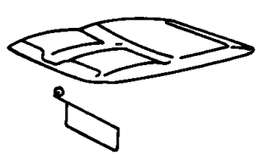	**IVA-200** Moldings, Scuff Plates 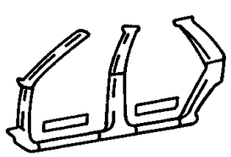	**IVA-300** Carpet 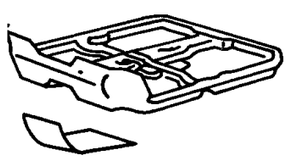	**IVA-400** Door Trim Panels-Front and Sliding 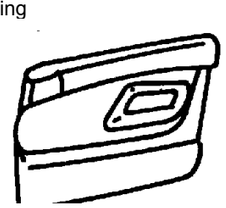
IVA-500 Front Seats and Attaching Parts 	**IVA-600** Rear Seats 	**IVA-700** Seat Belts-Front and Rear 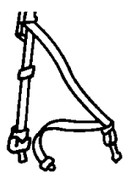	

Group - IVA Interior Trim

Illustration Title — Group-Fig. No.

Headliner and Visor
Headliner, Low Roof ....Fig. IVA - 110
Headliner, High Roof ....Fig. IVA - 115
Sunvisors, Grabhandles, Shelf and Attaching Parts ....Fig. IVA - 120

Moldings, Scuff Plates
Inner Panels - Fabric ....Fig. IVA - 210
Inner Panels - Cab ....Fig. IVA - 215
Inner Panels - Plywood ....Fig. IVA - 220
Inner Panel, Hard Fiber ....Fig. IVA - 221
Inner Panels ....Fig. IVA - 225
Inner Paneling Window - Pillar In Cab ....Fig. IVA - 230
Cargo Retainers - Without Windows ....Fig. IVA - 235
Cargo Retainers - With Windows ....Fig. IVA - 240
Rear Pillar Inner Panel ....Fig. IVA - 245
Cowl Panel - Silencer ....Fig. IVA - 250
Partition Panel ....Fig. IVA - 255
Partition Wall and Sliding Door ....Fig. IVA - 260

Carpet
Carpet - Floor ....Fig. IVA - 310
Floor Lining, Entry Paneling & Footrest ....Fig. IVA - 315
Floor - Rubber ....Fig. IVA - 320
Floor - Wooden ....Fig. IVA - 330
Insulation - Carpet ....Fig. IVA - 340
Insulation Floor ....Fig. IVA - 350

Door Trim Panels-Front and Sliding
Front Door Trim ....Fig. IVA - 410
Sliding Door Trim ....Fig. IVA - 420
Rear Dual Door Trim ....Fig. IVA - 430

Front Seats and Attaching Parts
Front Seat - Venice ....Fig. IVA - 510
Front Seat - Santos ....Fig. IVA - 515
Front Seat - Catano ....Fig. IVA - 520
Front Seat - Attaching Parts ....Fig. IVA - 525
Front Seat - Attaching Parts - Riser ....Fig. IVA - 530
Front Seat - Attaching Parts ....Fig. IVA - 535

Rear Seats
Rear Seat - 2 Passenger ....Fig. IVA - 610
Rear Seat - 3 Passenger ....Fig. IVA - 615
Attaching Parts - 3rd Passenger Seat ....Fig. IVA - 620

Seat Belts-Front and Rear
Seat Belt - Front ....Fig. IVA - 710
Seat Belt - Second Row ....Fig. IVA - 720

Headliner, Low Roof
Figure IVA-110

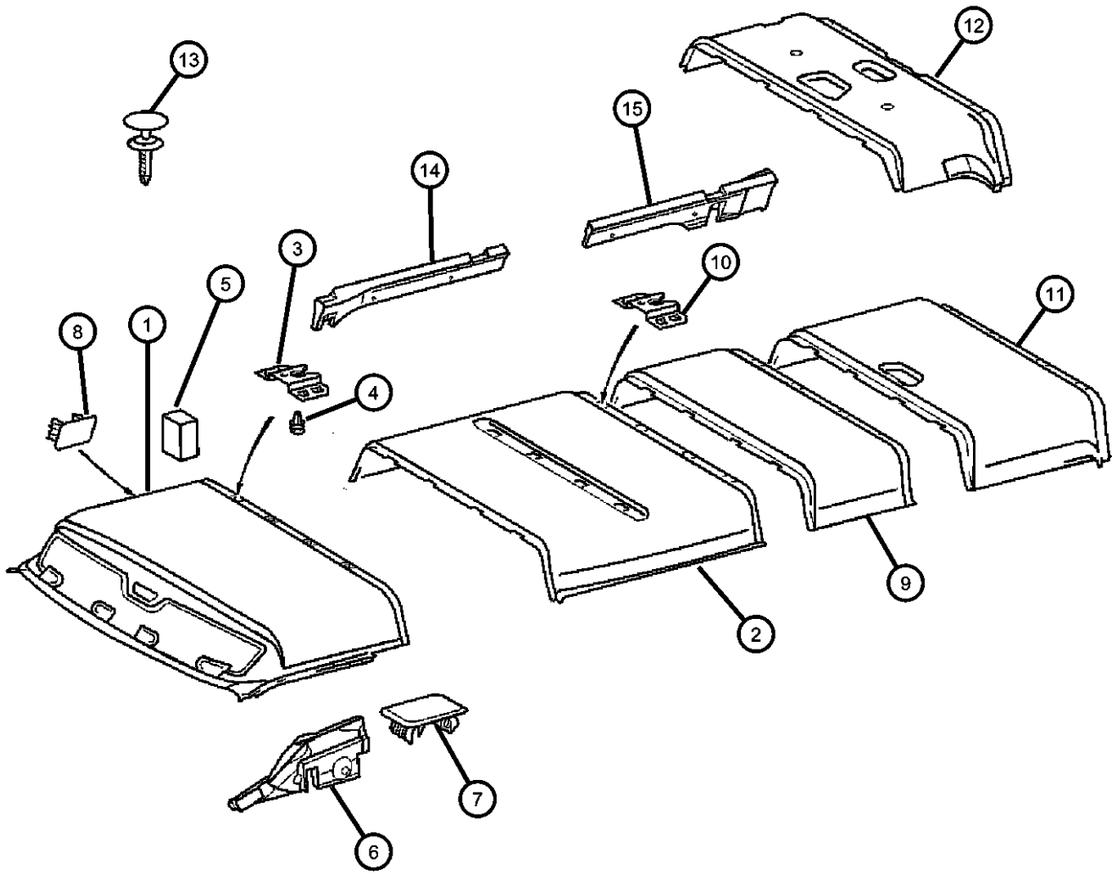

ITEM	PART NUMBER	QTY	LINE	SERIES	BODY	ENGINE	TRANS	TRIM	DESCRIPTION
1									HEADLINER, Front
	05123465AA	1	2, 6	L	11, 12, 14, 15, 16				Without Sunroof With Cargo Partition
		1	2, 6	L	51, 52, 54, 55, 56				Without Sunroof With Cargo Partition
	05123080AA	1	2, 6	L	16				Without Sunroof or Cargo Partition
		1	2, 6	L	56				Without Sunroof or Cargo Partition
		1	3, 7	L	16				Without Sunroof or Cargo Partition
	05123083AA	1	2, 6	L	16				With Sunroof, Without Cargo Partition
		1	2, 6	L	56				With Sunroof, Without Cargo Partition
		1	3, 7	L	16				With Sunroof, Without Cargo Partition
		1	3, 7	L	12, 15, 16				Without Sunroof With Cargo Partition
	05123470AA	1	2, 6	L	11, 12, 14, 15, 16				With Sunroof and Cargo Partition
		1	2, 6	L	51, 52, 54, 55, 56				With Sunroof and Cargo Partition
		1	3, 7	L	12, 15, 16				With Sunroof and Cargo Partition
2									HEADLINER, Center
	05123093AA	1	2, 6	L	11, 12, 14, 15				With Right Sliding Door
		1	2, 6	L	51, 52, 54, 55				With Right Sliding Door
		1	3, 7	L	12, 15				With Right Sliding Door
	05123095AA	1	2, 6	L	11, 12, 14, 15				With Left Sliding Door
		1	2, 6	L	51, 52, 54, 55				With Left Sliding Door
		1	3, 7	L	12, 15				With Left Sliding Door
	05123097AA	1	3, 7	L	12, 15				With Right & Left Sliding Door
		1	2, 6	L	11, 12, 14, 15				With Right & Left Sliding Door

SPRINTER (VA)

SERIES	LINE	BODY	ENGINE	TRANSMISSION
L = LOWLINE	3 = HD DODGE 2WD 6 = Lt. Duty DODGE 4WD 2 = Med. Duty DODGE 2WD 7 = Med. Duty DODGE 4WD	55 = Wagon 140" 54 = Wagon 118" 52 = Wagon 140" 51 = Wagon 118" 12 = Van 140" 11 = Van 118" 06 = Front Section 158" 14 = Van 118" 15 = Van 140" 16 = Van 158" 56 = Wagon 158" 01 = Chassis Forward Control 118" 02 = Chassis Forward Control 140"	EX8 = Engine-2.7L I5 Mercedes Turbo Diesel	DGJ = Transmission-5-Spd. Automatic,W5A580

Headliner, Low Roof
Figure IVA-110

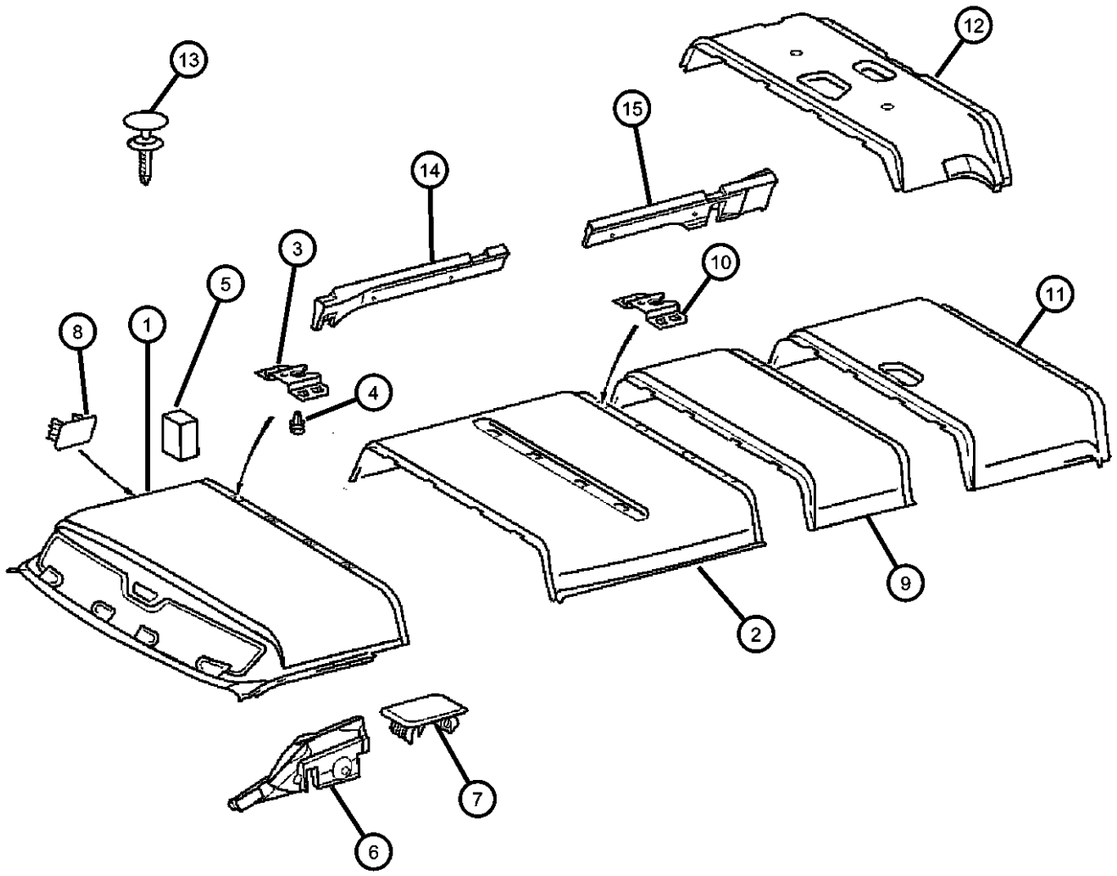

ITEM	PART NUMBER	QTY	LINE	SERIES	BODY	ENGINE	TRANS	TRIM	DESCRIPTION
		1	2, 6	L	51, 52, 54, 55				With Right & Left Sliding Door
3									BRACKET, Headliner to Roof Rail
	05123436AA	4	2, 6	L	11, 12, 14, 15, 16				
		4	2, 6	L	51, 52, 54, 55, 56				
		4	3, 7	L	12, 15, 16				
4									CLIP, Headlining
	05125569AA	8	2, 6	L	11, 12, 14, 15, 16				
		8	2, 6	L	51, 52, 54, 55, 56				
		8	3, 7	L	12, 15, 16				
5									PAD, Headlining
	05123547AA	2	2, 6	L	11, 12, 14, 15, 16				
		2	2, 6	L	51, 52, 54, 55, 56				
		2	3, 7	L	12, 15, 16				
6									FLOCK, Nylon
	05123496AA	1	2, 6	L	11, 12, 14, 15, 16				Left
		1	2, 6	L	51, 52, 54, 55, 56				Left
		1	3, 7	L	12, 15, 16				Left
	05123497AA	1	2, 6	L	11, 12, 14, 15, 16				Right
		1	2, 6	L	51, 52, 54, 55, 56				Right
		1	3, 7	L	12, 15				Right
7									CLIP, Headlining
	05125569AA	8	2, 6	L	11, 12, 14, 15, 16				

SPRINTER (VA)

SERIES	LINE	BODY	ENGINE	TRANSMISSION
L = LOWLINE	3 = HD DODGE 2WD 6 = Lt. Duty DODGE 4WD 2 = Med. Duty DODGE 2WD 7 = Med. Duty DODGE 4WD	55 = Wagon 140" 54 = Wagon 118" 52 = Wagon 140" 51 = Wagon 118" 12 = Van 140" 11 = Van 118" 06 = Front Section 158" 14 = Van 118" 15 = Van 140" 16 = Van 158" 56 = Wagon 158" 01 = Chassis Forward Control 118" 02 = Chassis Forward Control 140"	EX8 = Engine-2.7L I5 Mercedes Turbo Diesel	DGJ = Transmission-5-Spd. Automatic,W5A580

Headliner, Low Roof
Figure IVA-110

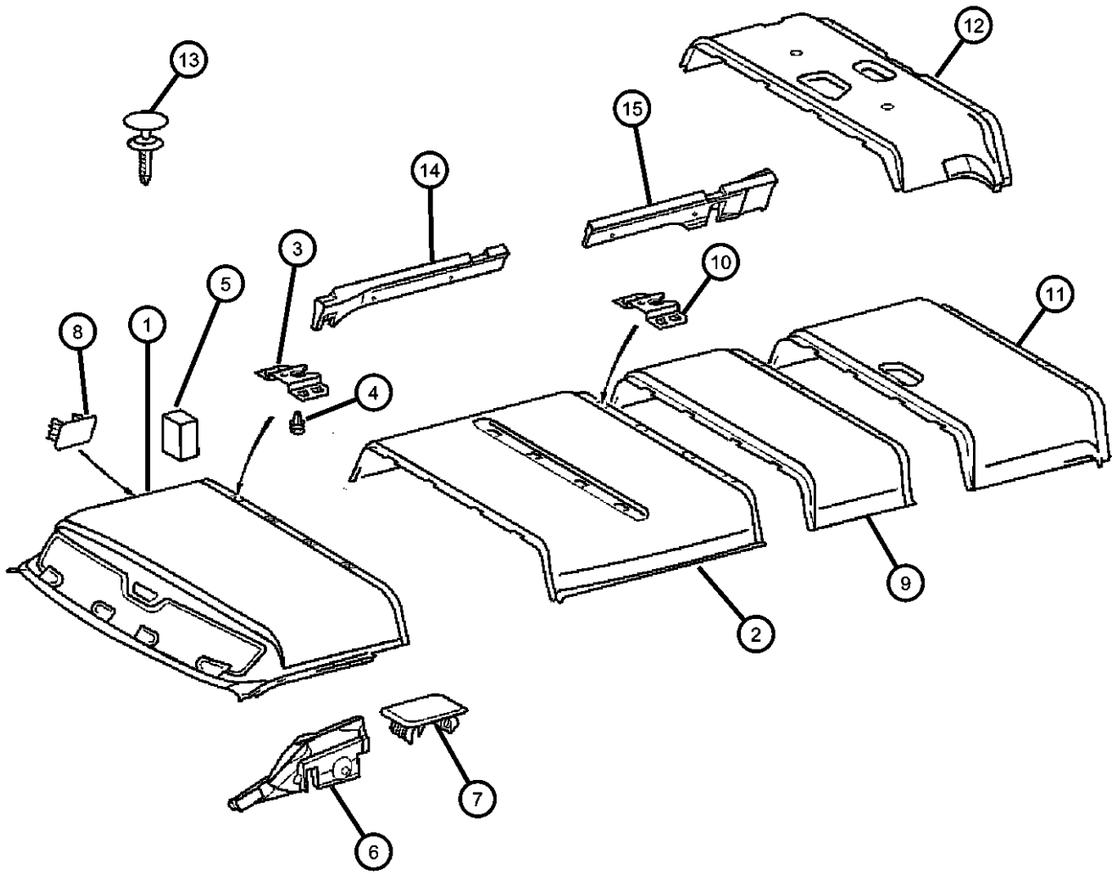

ITEM	PART NUMBER	QTY	LINE	SERIES	BODY	ENGINE	TRANS	TRIM	DESCRIPTION
		8	2, 6	L	51, 52, 54, 55, 56				
		4	3, 7	L	12, 15, 16				
8									PLUG, Headliner
	05123443AA	2	2, 6	L	11, 12, 14, 15, 16				
		2	2, 6	L	51, 52, 54, 55, 56				
		2	3, 7	L	12, 15, 16				
9									HEADLINER, Center
	05123107AA	1	2, 6	L	11, 12, 14, 15				With Interior Lamp
		1	2, 6	L	51, 52, 54, 55				With Interior Lamp
		1	3, 7	L	12, 15				With Interior Lamp
	05123140AA	1	2, 6	L	12, 15				With Sunroof
		1	2, 6	L	52, 55				With Sunroof
		1	3, 7	L	12, 15				
10									BRACKET
	05123436AA	8	2, 6	L	11, 12, 14, 15				
		8	2, 6	L	51, 52, 54, 55				
		8	3, 7	L	12, 15, 16				
11									HEADLINER, Rear
	05123108AA	1	2, 6	L	11, 12, 14, 15				
		1	2, 6	L	51, 52, 54, 55				
		1	3, 7	L	12, 15				
12									PANEL, Quarter
	05123155AA	1	2, 6	L	52, 55				
		1	3, 7	L	12, 15				

SPRINTER (VA)

SERIES	LINE	BODY	ENGINE	TRANSMISSION
L = LOWLINE	3 = HD DODGE 2WD 6 = Lt. Duty DODGE 4WD 2 = Med. Duty DODGE 2WD 7 = Med. Duty DODGE 4WD	55 = Wagon 140" 54 = Wagon 118" 52 = Wagon 140" 51 = Wagon 118" 12 = Van 140" 11 = Van 118" 06 = Front Section 158" 14 = Van 118" 15 = Van 140" 16 = Van 158" 56 = Wagon 158" 01 = Chassis Forward Control 118" 02 = Chassis Forward Control 140"	EX8 = Engine-2.7L I5 Mercedes Turbo Diesel	DGJ = Transmission-5-Spd. Automatic,W5A580

Headliner, Low Roof
Figure IVA-110

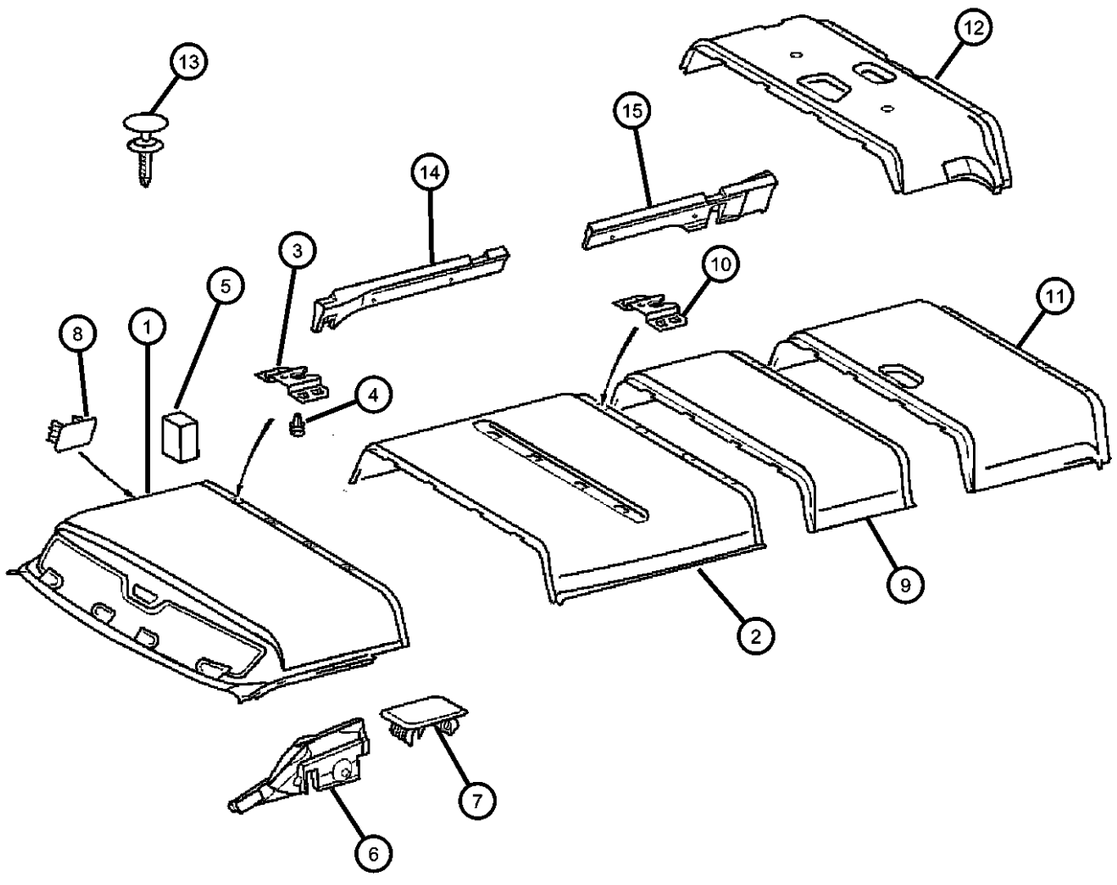

ITEM	PART NUMBER	QTY	LINE	SERIES	BODY	ENGINE	TRANS	TRIM	DESCRIPTION
		1	2, 6	L	12, 15				
13									RIVET
	05104541AA	2	2, 6	L	11, 12, 14, 15, 16				Headliner to Rear Roof Rail
	05125810AA	2	2, 6	L	51, 52, 54, 55, 56				Paneling to Roof Rear Rail
		2	3, 7	L	12, 15, 16				Paneling to Roof Rear Rail
		2	2, 6	L	51, 52, 54, 55, 56				Headliner to Rear Roof Rail
		2	3, 7	L	12, 15, 16				Headliner to Rear Roof Rail
		2	2, 6	L	11, 12, 14, 15, 16				Paneling to Roof Rear Rail
14	05104297AA	1	2, 6	L	51, 52, 54, 55, 56				FLOCK, Nylon
15									FLOCK, Nylon
	05104298AA	1	2, 6	L	51, 52, 54, 55, 56				
		1	3, 7	L	12, 15, 16				
-16									FLOCK, Nylon, Spacer
	05123510AA	1	2, 6	L	11, 12, 14, 15, 16				
		1	3, 7	L	12, 15, 16				
-17									FLOCK, Nylon, Spacer
	05123512AA	1	2, 6	L	11, 12, 14, 15, 16				
		1	3, 7	L	12, 15, 16				
-18									SPACER, Foam Headliner
	05123514AA	1	3, 7	L	12, 15, 16				
		1	2, 6	L	11, 12, 14, 15, 16				
-19									SPACER, Foam Headliner
	05123516AA	1	2, 6	L	11, 12, 14, 15, 16				
		1	3, 7	L	12, 15, 16				

SPRINTER (VA)

SERIES	LINE	BODY	ENGINE	TRANSMISSION
L = LOWLINE	3 = HD DODGE 2WD 6 = Lt. Duty DODGE 4WD 2 = Med. Duty DODGE 2WD 7 = Med. Duty DODGE 4WD	55 = Wagon 140" 54 = Wagon 118" 52 = Wagon 140" 51 = Wagon 118" 12 = Van 140" 11 = Van 118" 06 = Front Section 158" 14 = Van 118" 15 = Van 140" 16 = Van 158" 56 = Wagon 158" 01 = Chassis Forward Control 118" 02 = Chassis Forward Control 140"	EX8 = Engine-2.7L I5 Mercedes Turbo Diesel	DGJ = Transmission-5-Spd. Automatic,W5A580

Headliner, High Roof
Figure IVA-115

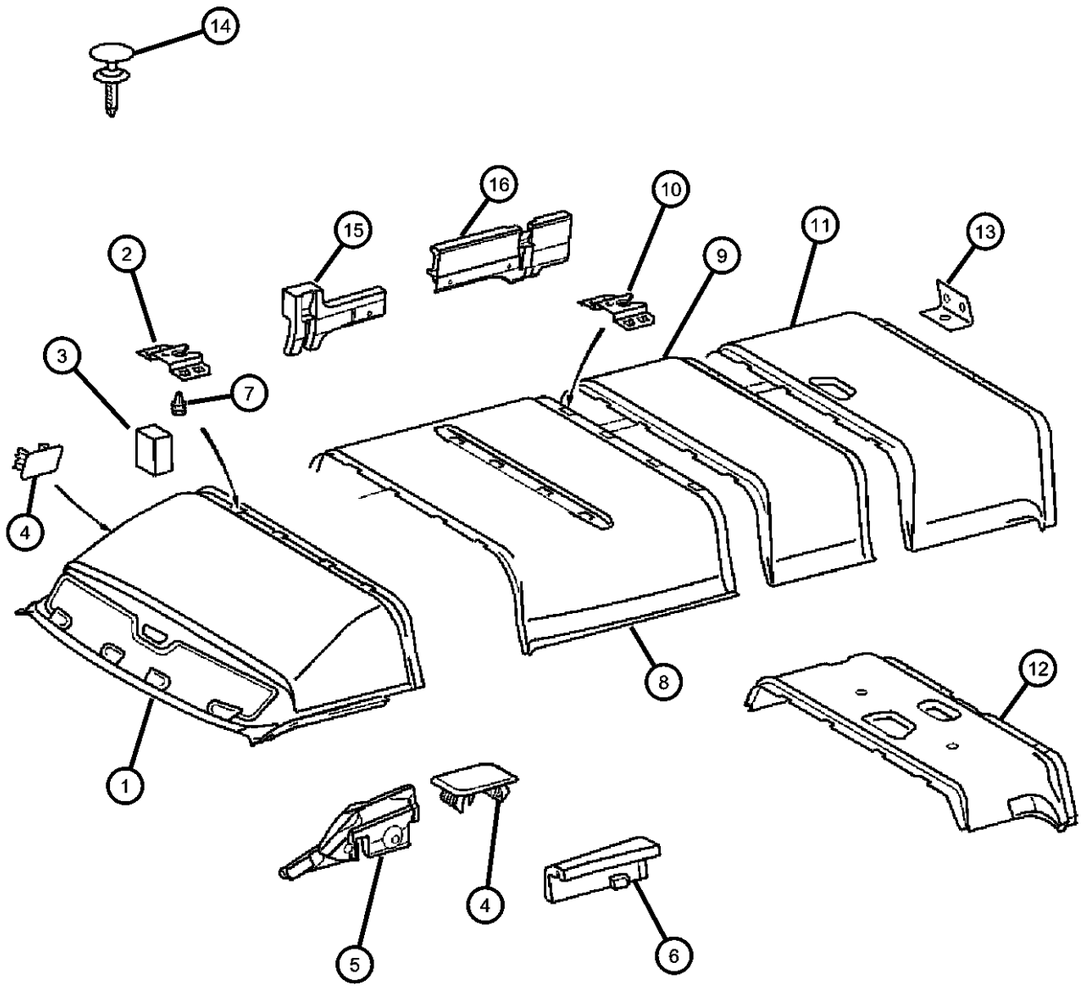

ITEM	PART NUMBER	QTY	LINE	SERIES	BODY	ENGINE	TRANS	TRIM	DESCRIPTION
Sales Code:									
[XJY] = Cargo Partition with Sliding Door									
1									HEADLINER, Front
	05104300AA	1	2, 6	L	11, 12, 14, 15, 16				With Sliding Door [XJY]
		1	2, 6	L	51, 52, 54, 55, 56				With Sliding Door [XJY]
	05123473AA	1	2, 6	L	11, 12, 14, 15, 16				Without Sliding Door [XJY]
		1	3, 7	L	12, 15, 16				Without Sliding Door [XJY]
		1	3, 7	L	12, 15, 16				With Sliding Door [XJY]
2									BRACKET
	05123436AA	4	2, 6	L	11, 12, 14, 15, 16				
		4	3, 7	L	12, 15, 16				
		4	2, 6	L	51, 52, 54, 55, 56				
3									PAD, Headlining
	05123547AA	1	2, 6	L	11, 12, 14, 15, 16				
		2	2, 6	L	51, 52, 54, 55, 56				
		2	3, 7	L	12, 15, 16				
4									PLUG, Headliner
	05123443AA	2	2, 6	L	11, 12, 14, 15, 16				
		2	2, 6	L	51, 52, 54, 55, 56				
		2	3, 7	L	12, 15, 16				
5									FLOCK, Nylon
	05123496AA	1	2, 6	L	11, 12, 14, 15, 16				Left
		1	2, 6	L	51, 52, 54, 55, 56				Left
	05123497AA	1	3, 7	L	12, 15				Right

SPRINTER (VA)

SERIES	LINE	BODY	ENGINE	TRANSMISSION
L = LOWLINE	3 = HD DODGE 2WD 6 = Lt. Duty DODGE 4WD 2 = Med. Duty DODGE 2WD 7 = Med. Duty DODGE 4WD	55 = Wagon 140" 54 = Wagon 118" 52 = Wagon 140" 51 = Wagon 118" 12 = Van 140" 11 = Van 118" 06 = Front Section 158" 14 = Van 118" 15 = Van 140" 16 = Van 158" 56 = Wagon 158" 01 = Chassis Forward Control 118" 02 = Chassis Forward Control 140"	EX8 = Engine-2.7L I5 Mercedes Turbo Diesel	DGJ = Transmission-5-Spd. Automatic,W5A580

Headliner, High Roof
Figure IVA-115

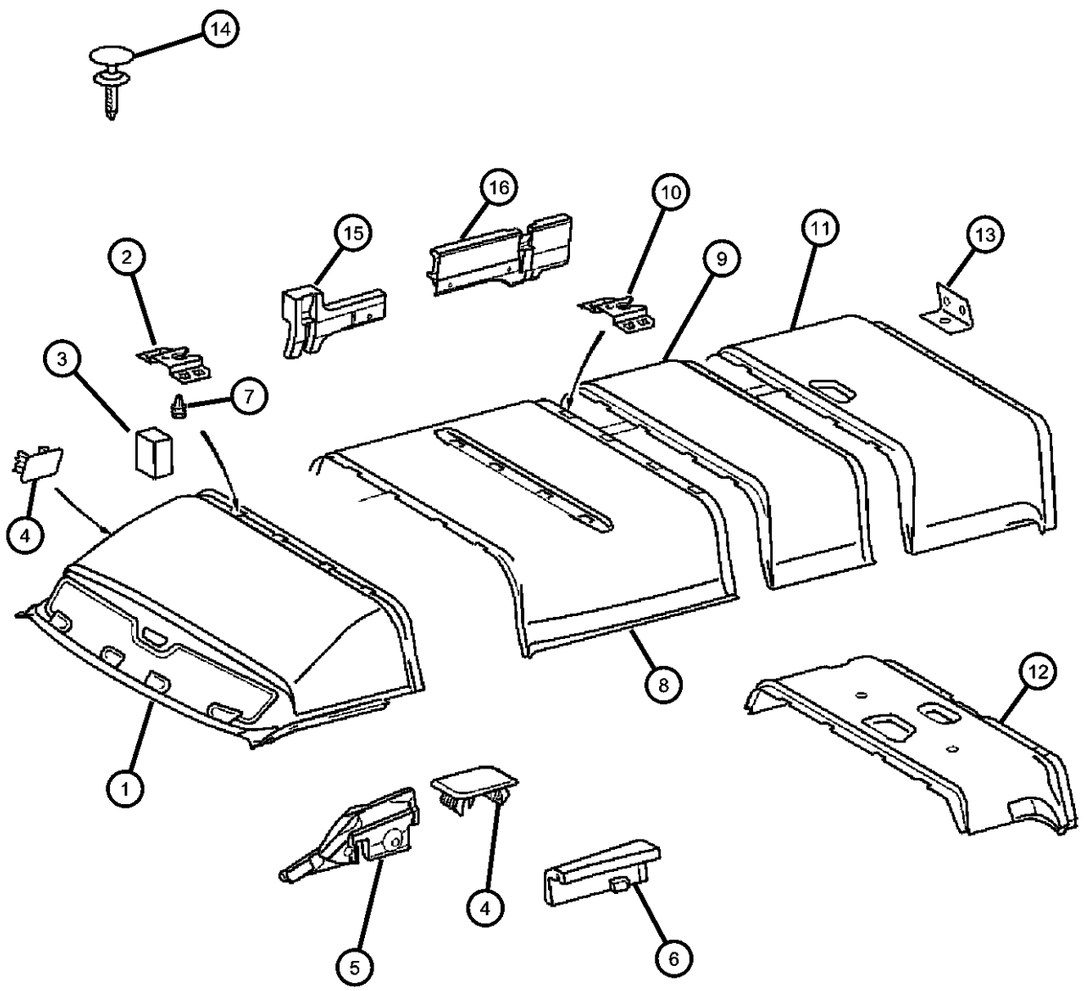

ITEM	PART NUMBER	QTY	LINE	SERIES	BODY	ENGINE	TRANS	TRIM	DESCRIPTION
		1	3, 7	L	12, 15, 16				Left
		1	2, 6	L	11, 12, 14, 15, 16				Right
		1	2, 6	L	51, 52, 54, 55, 56				Right
6									FLOCK, Nylon
	05123498AA	1	2, 6	L	11, 12, 14, 15, 16				Left
		1	2, 6	L	51, 52, 54, 55, 56				Left
		1	3, 7	L	12, 15, 16				Left
	05123499AA	1	2, 6	L	11, 12, 14, 15, 16				Right
		1	2, 6	L	51, 52, 54, 55, 56				Right
		1	3, 7	L	12, 15, 16				Right
7									CLIP, Headlining
	05125569AA	4	2, 6	L	11, 12, 14, 15, 16				Paneling to Roof Rail
		8	2, 6	L	11, 12, 14, 15, 16				Headliner to Roof Bow
		8	2, 6	L	12, 15				Headliner to Roof Bow
		12	2, 6	L	16				Headliner to Rear Roof Rail
		4	2, 6	L	51, 52, 54, 55, 56				Paneling to Roof Rail
		8	2, 6	L	51, 52, 54, 55, 56				Headliner to Roof Bow
		12	2, 6	L	56				Headliner to Rear Roof Rail
		4	3, 7	L	12, 15, 16				Paneling to Roof Rail
		8	7, 3	L	12, 15, 16				Headliner to Rear Roof Rail
8									HEADLINER, Center
	05104278AA	1	2, 6	L	11, 12, 14, 15, 16				With Right Sliding Door
		1	2, 6	L	51, 52, 54, 55, 56				With Right Sliding Door

SPRINTER (VA)

SERIES	LINE	BODY	ENGINE	TRANSMISSION
L = LOWLINE	3 = HD DODGE 2WD 6 = Lt. Duty DODGE 4WD 2 = Med. Duty DODGE 2WD 7 = Med. Duty DODGE 4WD	55 = Wagon 140" 54 = Wagon 118" 52 = Wagon 140" 51 = Wagon 118" 12 = Van 140" 11 = Van 118" 06 = Front Section 158" 14 = Van 118" 15 = Van 140" 16 = Van 158" 56 = Wagon 158" 01 = Chassis Forward Control 118" 02 = Chassis Forward Control 140"	EX8 = Engine-2.7L I5 Mercedes Turbo Diesel	DGJ = Transmission-5-Spd. Automatic,W5A580

Headliner, High Roof
Figure IVA-115

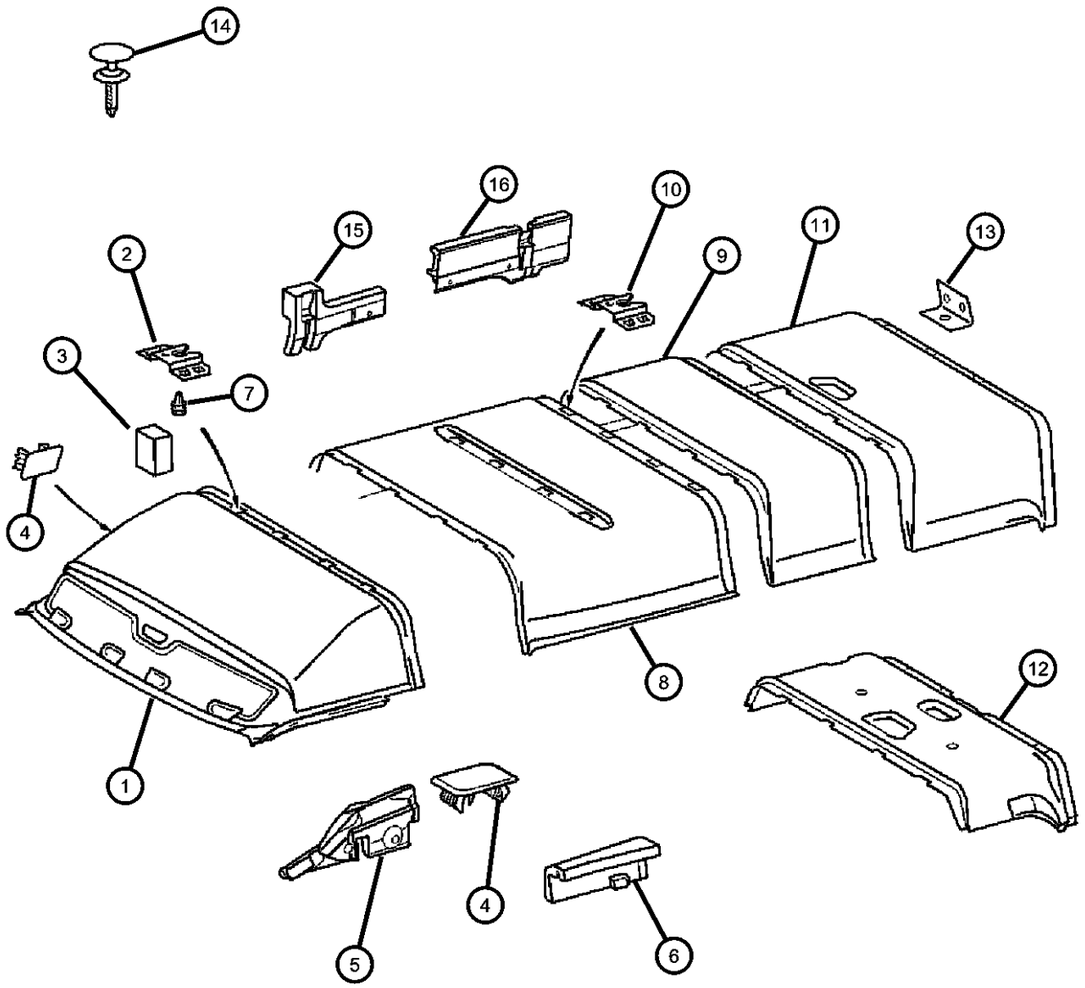

ITEM	PART NUMBER	QTY	LINE	SERIES	BODY	ENGINE	TRANS	TRIM	DESCRIPTION
		1	3, 7	L	12, 15, 16				With Right Sliding Door
	05123112AA	1	2, 6	L	11, 12, 14, 15, 16				With Left Sliding Door
		1	2, 6	L	51, 52, 54, 55, 56				With Left Sliding Door
		1	3, 7	L	12, 15, 16				With Left Sliding Door
	05123114AA	1	2, 6	L	51, 52, 54, 55, 56				With Right & Left Sliding Door
		1	3, 7	L	12, 15, 16				With Right & Left Sliding Door
		1	2, 6	L	11, 12, 14, 15, 16				With Right & Left Sliding Door
9									HEADLINER, Center
	05104279AA	1	2, 6	L	12, 15, 16				With Sunroof
		1	3, 7	L	12, 15				
		2	3, 7	L	16				With Sunroof
	05123141AA	1	2, 6	L	12, 15, 16				With Interior Lamp
		1	2, 6	L	52, 55, 56				With Interior Lamp
		1	3, 7	L	12, 15, 16				With Interior Lamp
		1	2, 6	L	52, 55, 56				With Sunroof
10									BRACKET
	05123436AA	4	2, 6	L	51, 52, 54, 55, 56				Paneling to Roof Rail
		12	2, 6	L	56				Headliner to Rear Roof Rail
		4	3, 7	L	12, 15, 16				Paneling to Roof Rail
		4	2, 6	L	11, 12, 14, 15, 16				Paneling to Roof Rail
		12	2, 6	L	16				Headliner to Rear Roof Rail
11									HEADLINER, Rear
	05123144AA	1	2, 6	L	16				
		1	2, 6	L	56				
		1	3, 7	L	16				

SPRINTER (VA)

SERIES	LINE	BODY	ENGINE	TRANSMISSION
L = LOWLINE	3 = HD DODGE 2WD 6 = Lt. Duty DODGE 4WD 2 = Med. Duty DODGE 2WD 7 = Med. Duty DODGE 4WD	55 = Wagon 140" 54 = Wagon 118" 52 = Wagon 140" 51 = Wagon 118" 12 = Van 140" 11 = Van 118" 06 = Front Section 158" 14 = Van 118" 15 = Van 140" 16 = Van 158" 56 = Wagon 158" 01 = Chassis Forward Control 118" 02 = Chassis Forward Control 140"	EX8 = Engine-2.7L I5 Mercedes Turbo Diesel	DGJ = Transmission-5-Spd. Automatic,W5A580

AR = use ase required - = Non illustrrated part

Headliner, High Roof
Figure IVA-115

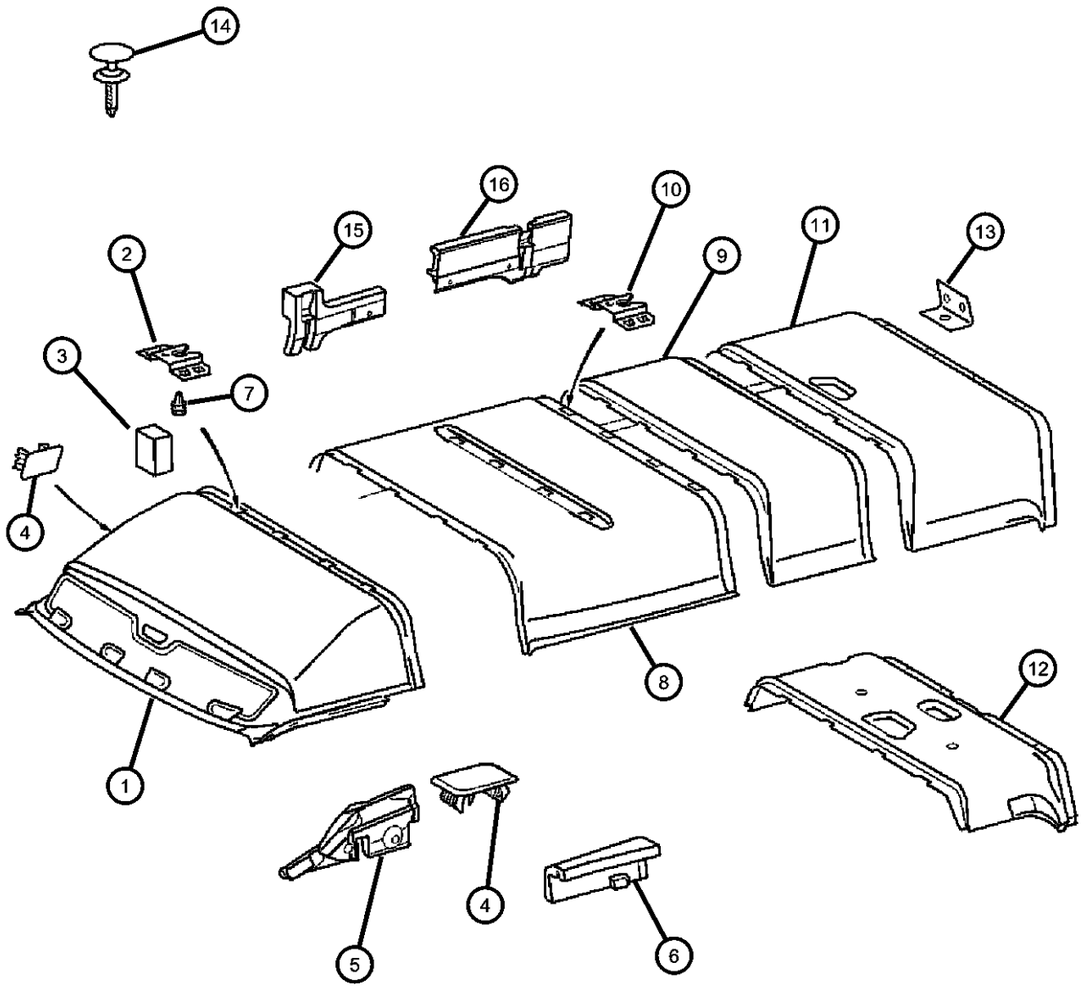

ITEM	PART NUMBER	QTY	LINE	SERIES	BODY	ENGINE	TRANS	TRIM	DESCRIPTION
12									HEADLINER, Rear
	05104277AA	1	3, 7	L	12, 15				
		1	2, 6	L	12, 15				
		1	2, 6	L	52, 55				
13									BRACKET
	05123437AA	1	2, 6	L	11, 12, 14, 15, 16				
		1	2, 6	L	51, 52, 54, 55, 56				
		1	3, 7	L	12, 15, 16				
14									RIVET
	05125810AA	2	2, 6	L	11, 12, 14, 15, 16				Headliner to Rear Roof Rail
		2	2, 6	L	51, 52, 54, 55, 56				Headliner to Rear Roof Rail
		2	7, 3	L	12, 15, 16				Headliner to Rear Roof Rail
15	05131910AA	1	2, 6	L	51, 52, 54, 55, 56				FLOCK, Nylon
16									SPACER
	05104299AA	1	2, 6	L	51, 52, 54, 55, 56				
		1	3, 7	L	12, 15, 16				
-17									SPACER, Foam Headliner
	05123502AA	1	2, 6	L	11, 12, 14, 15, 16				
		1	3, 7	L	12, 15, 16				
-18									SPACER, Foam Headliner
	05123504AA	1	2, 6	L	11, 12, 14, 15, 16				
		1	3, 7	L	12, 15, 16				
-19									SPACER, Foam Headliner
	05123506AA	1	2, 6	L	11, 12, 14, 15, 16				

SPRINTER (VA)

SERIES	LINE	BODY	ENGINE	TRANSMISSION
L = LOWLINE	3 = HD DODGE 2WD 6 = Lt. Duty DODGE 4WD 2 = Med. Duty DODGE 2WD 7 = Med. Duty DODGE 4WD	55 = Wagon 140" 54 = Wagon 118" 52 = Wagon 140" 51 = Wagon 118" 12 = Van 140" 11 = Van 118" 06 = Front Section 158" 14 = Van 118" 15 = Van 140" 16 = Van 158" 56 = Wagon 158" 01 = Chassis Forward Control 118" 02 = Chassis Forward Control 140"	EX8 = Engine-2.7L I5 Mercedes Turbo Diesel	DGJ = Transmission-5-Spd. Automatic,W5A580

AR = use ase required - = Non illustrrated part

Headliner, High Roof
Figure IVA-115

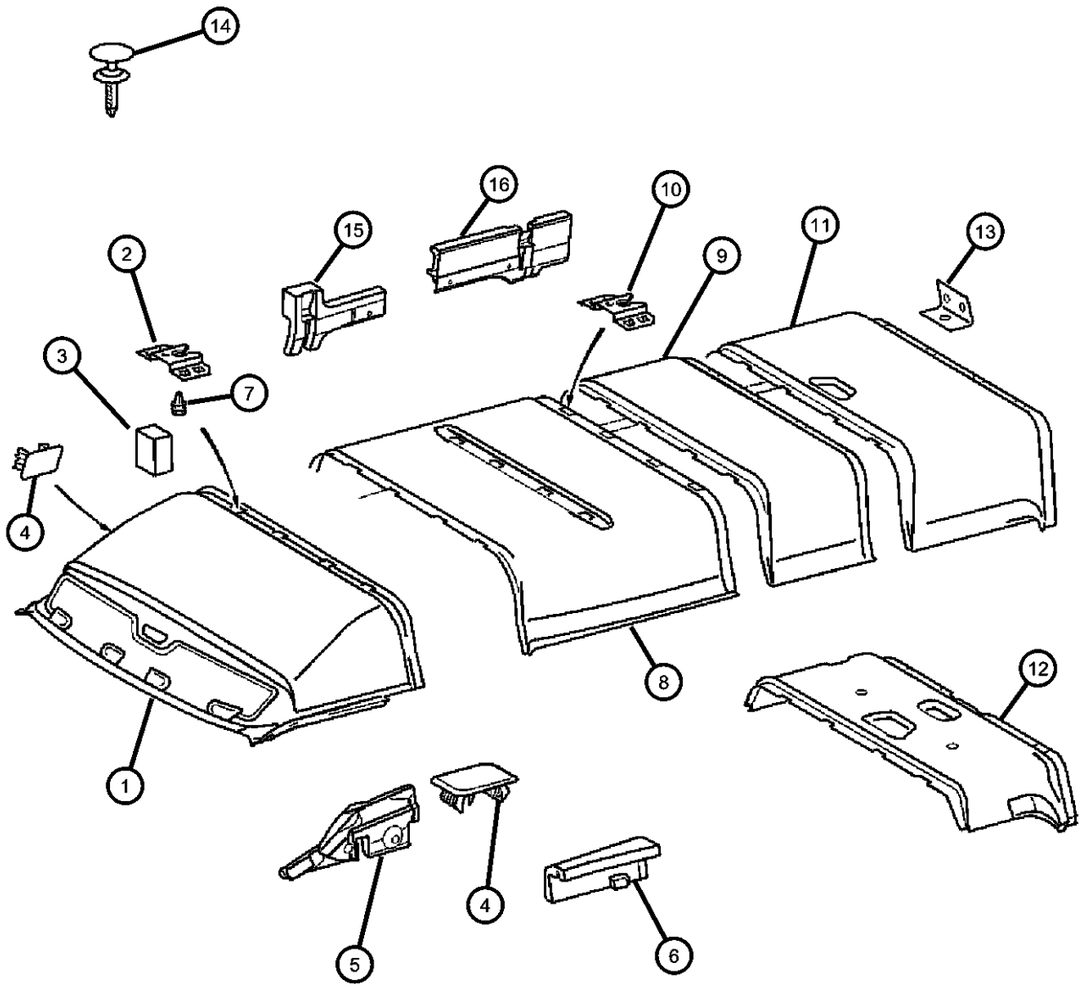

ITEM	PART NUMBER	QTY	LINE	SERIES	BODY	ENGINE	TRANS	TRIM	DESCRIPTION
		1	3, 7	L	12, 15, 16				
-20									SPACER, Foam Headliner
	05123508AA	1	2, 6	L	11, 12, 14, 15, 16				
		1	3, 7	L	12, 15, 16				

SPRINTER (VA)

SERIES	LINE	BODY	ENGINE	TRANSMISSION
L = LOWLINE	3 = HD DODGE 2WD 6 = Lt. Duty DODGE 4WD 2 = Med. Duty DODGE 2WD 7 = Med. Duty DODGE 4WD	55 = Wagon 140" 54 = Wagon 118" 52 = Wagon 140" 51 = Wagon 118" 12 = Van 140" 11 = Van 118" 06 = Front Section 158" 14 = Van 118" 15 = Van 140" 16 = Van 158" 56 = Wagon 158" 01 = Chassis Forward Control 118" 02 = Chassis Forward Control 140"	EX8 = Engine-2.7L I5 Mercedes Turbo Diesel	DGJ = Transmission-5-Spd. Automatic,W5A580

AR = use ase required - = Non illustrrated part

Sunvisors, Grabhandles, Shelf and Attaching Parts
Figure IVA-120

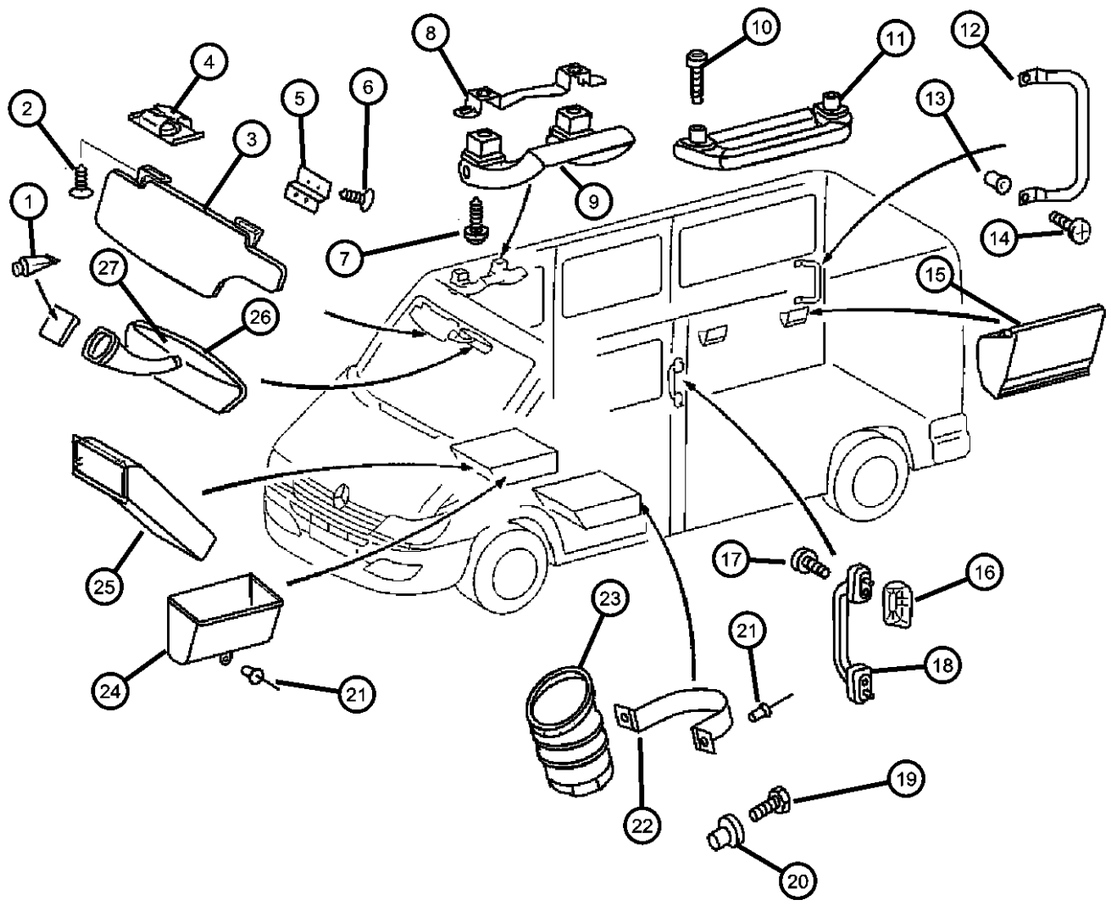

ITEM	PART NUMBER	QTY	LINE	SERIES	BODY	ENGINE	TRANS	TRIM	DESCRIPTION
1		1							ADHESIVE, (NOT SERVICED)
2									SCREW
	06104505AA	8	2, 6	L	11, 12, 14, 15, 16				
		8	2, 6	L	51, 52, 54, 55, 56				
		8	3, 7	L	12, 15, 16				
3									VISOR
	05104438AA	1	2, 6	L	11, 12, 14, 15, 16				Left
		1	2, 6	L	51, 52, 54, 55, 56				Left
		1	3, 7	L	12, 15, 16				Left
	05104439AA	1	2, 6	L	11, 12, 14, 15, 16				Right
		1	6, 2	L	51, 52, 54, 55, 56				Right
		1	3, 7	L	12, 15, 16				Right
4									CLIP, Visor
	05125854AA	8	2, 6	L	11, 12, 14, 15, 16				
		8	2, 6	L	51, 52, 54, 55, 56				
		2	3, 7	L	12, 15, 16				
5									BRACKET, Trim
	05124268AA	4	2, 6	L	11, 12, 14, 15, 16				
		4	2, 6	L	51, 52, 54, 55, 56				
		4	3, 7	L	12, 15, 16				
6									SCREW
	06104505AA	8	2, 6	L	11, 12, 14, 15, 16				
		8	2, 6	L	51, 52, 54, 55, 56				

SPRINTER (VA)

SERIES	LINE	BODY	ENGINE	TRANSMISSION
L = LOWLINE	3 = HD DODGE 2WD 6 = Lt. Duty DODGE 4WD 2 = Med. Duty DODGE 2WD 7 = Med. Duty DODGE 4WD	55 = Wagon 140" 54 = Wagon 118" 52 = Wagon 140" 51 = Wagon 118" 12 = Van 140" 11 = Van 118" 06 = Front Section 158" 14 = Van 118" 15 = Van 140" 16 = Van 158" 56 = Wagon 158" 01 = Chassis Forward Control 118" 02 = Chassis Forward Control 140"	EX8 = Engine-2.7L I5 Mercedes Turbo Diesel	DGJ = Transmission-5-Spd. Automatic,W5A580

AR = use ase required - = Non illustrrated part

<< RETURN TO GROUP INDEX

Sunvisors, Grabhandles, Shelf and Attaching Parts
Figure IVA-120

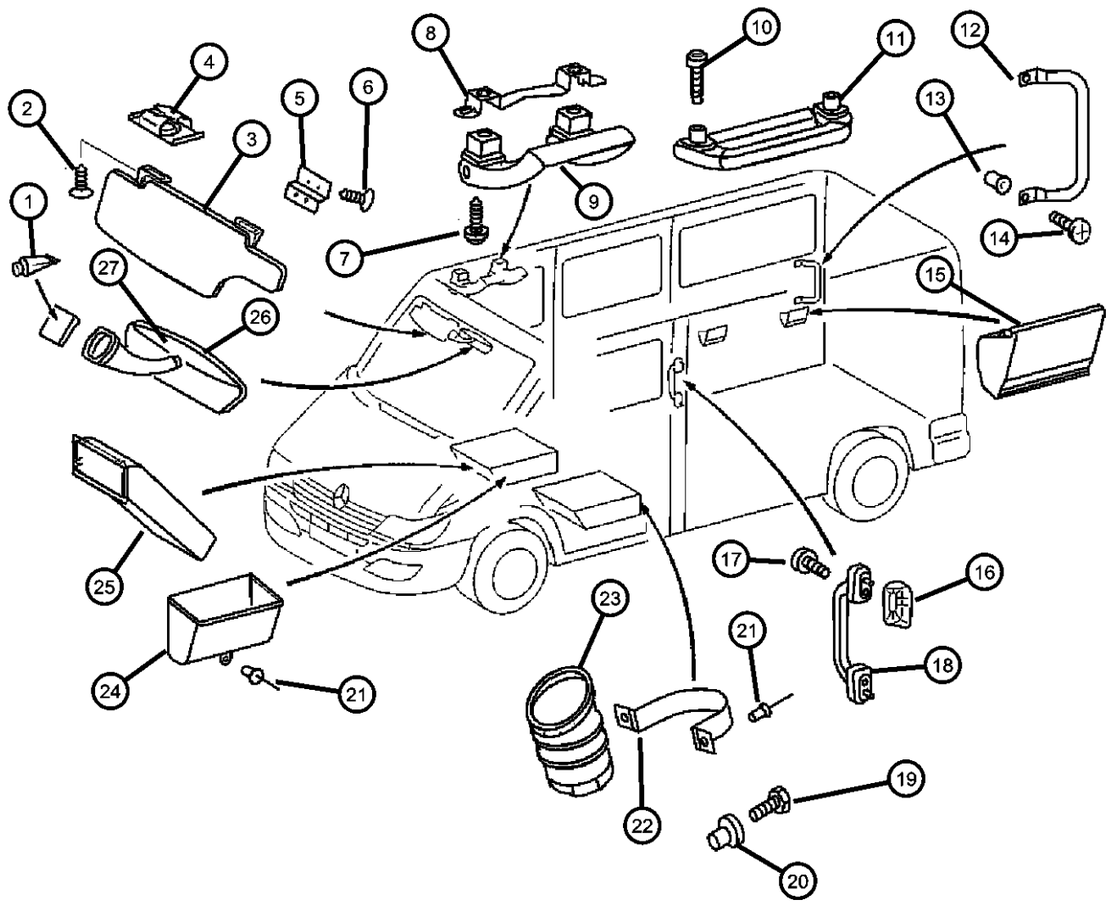

ITEM	PART NUMBER	QTY	LINE	SERIES	BODY	ENGINE	TRANS	TRIM	DESCRIPTION
		8	3, 7	L	12, 15, 16				
7									SCREW, Tapping
	06104574AA	2	2, 6	L	11, 12, 14, 15, 16				
		2	2, 6	L	51, 52, 54, 55, 56				
		2	3, 7	L	12, 15, 16				
8									BRACKET, Grab Handle
	05124271AA	1	2, 6	L	11, 12, 14, 15, 16				
		1	2, 6	L	51, 52, 54, 55, 56				
		1	3, 7	L	12, 15, 16				
9									HANDLE, Grab
	05104437AA	1	3, 7	L	12, 15, 16				
		1	2, 6	L	11, 12, 14, 15, 16				
		1	2, 6	L	51, 52, 54, 55, 56				
10		1							SCREW, (NOT SERVICED)
11									HANDLE, Grab
	0ZF48CS8AA	1	3, 7	L	02, 06			-AA	
		1	2, 6	L	01, 02, 06			-AA	
12									HANDLE, Grab
	05104448AA	1	2, 6	L	11, 12, 14, 15, 16				
		1	2, 6	L	51, 52, 54, 55, 56				
		1	3, 7	L	12, 15, 16				
13									NUTSERT, Rivet
	05104678AA	2	2, 6	L	11, 12, 14, 15, 16				

SPRINTER (VA)

SERIES	LINE	BODY	ENGINE	TRANSMISSION
L = LOWLINE	3 = HD DODGE 2WD 6 = Lt. Duty DODGE 4WD 2 = Med. Duty DODGE 2WD 7 = Med. Duty DODGE 4WD	55 = Wagon 140" 54 = Wagon 118" 52 = Wagon 140" 51 = Wagon 118" 12 = Van 140" 11 = Van 118" 06 = Front Section 158" 14 = Van 118" 15 = Van 140" 16 = Van 158" 56 = Wagon 158" 01 = Chassis Forward Control 118" 02 = Chassis Forward Control 140"	EX8 = Engine-2.7L I5 Mercedes Turbo Diesel	DGJ = Transmission-5-Spd. Automatic,W5A580

AR = use ase required - = Non illustrrated part

<< RETURN TO GROUP INDEX

Sunvisors, Grabhandles, Shelf and Attaching Parts
Figure IVA-120

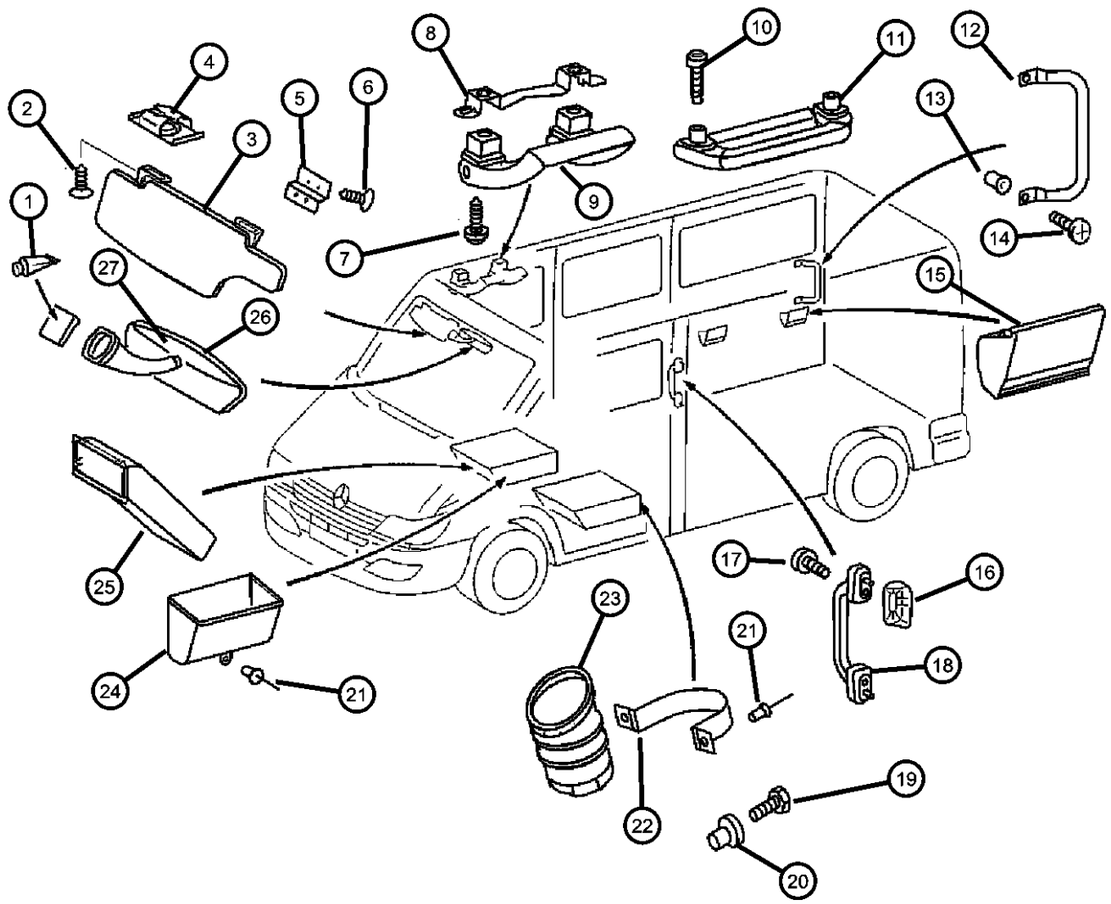

ITEM	PART NUMBER	QTY	LINE	SERIES	BODY	ENGINE	TRANS	TRIM	DESCRIPTION
		2	2, 6	L	51, 52, 54, 55, 56				
		2	3, 7	L	12, 15, 16				
14									SCREW
	06104153AA	2	2, 6	L	51, 52, 54, 55, 56				
		2	2, 6	L	11, 12, 14, 15, 16				
		4	3, 7	L	12, 15, 16				
15									ASHTRAY
	05124222AA	4	2, 6	L	11, 14				
		4	2, 6	L	52, 55, 56				
		6	3, 7	L	12, 15, 16				
16									COVER, Assist Handle
	05124285AA	2	2, 6	L	11, 12, 14, 15, 16				
		2	2, 6	L	51, 52, 54, 55, 56				
		4	3, 7	L	12, 15, 16				
17									SCREW
	06104142AA	2	2, 6	L	11, 12, 14, 15, 16				
		2	2, 6	L	51, 52, 54, 55, 56				
		2	3, 7	L	12, 15, 16				
18									HANDLE, Grab
	05103676AA	1	2, 6	L	11, 12, 14, 15, 16				
		1	2, 6	L	51, 52, 54, 55, 56				
		2	3, 7	L	12, 15, 16				
19									SCREW

SPRINTER (VA)

SERIES	LINE	BODY	ENGINE	TRANSMISSION
L = LOWLINE	3 = HD DODGE 2WD 6 = Lt. Duty DODGE 4WD 2 = Med. Duty DODGE 2WD 7 = Med. Duty DODGE 4WD	55 = Wagon 140" 54 = Wagon 118" 52 = Wagon 140" 51 = Wagon 118" 12 = Van 140" 11 = Van 118" 06 = Front Section 158" 14 = Van 118" 15 = Van 140" 16 = Van 158" 56 = Wagon 158" 01 = Chassis Forward Control 118" 02 = Chassis Forward Control 140"	EX8 = Engine-2.7L I5 Mercedes Turbo Diesel	DGJ = Transmission-5-Spd. Automatic,W5A580

AR = use ase required - = Non illustrrated part

Sunvisors, Grabhandles, Shelf and Attaching Parts
Figure IVA-120

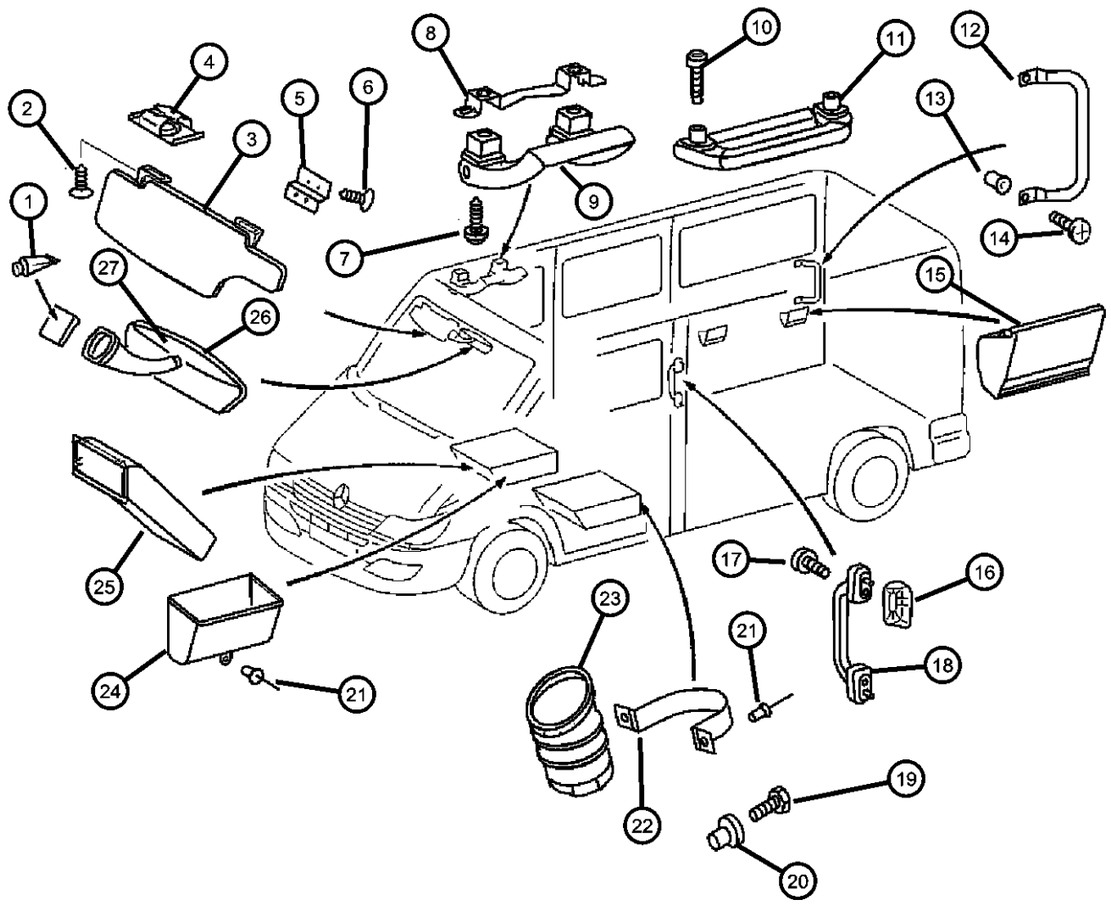

ITEM	PART NUMBER	QTY	LINE	SERIES	BODY	ENGINE	TRANS	TRIM	DESCRIPTION
	05134034AA	2	2, 6	L	11, 12, 14, 15, 16				
		2	2, 6	L	51, 52, 54, 55, 56				
20									NUT
	05133943AA	2	2, 6	L	11, 12, 14, 15, 16				
		2	2, 6	L	51, 52, 54, 55, 56				
		99	3, 7	L	12, 15, 16				
21									RIVET, M4.8
	05133934AA	1	2, 6	L	11, 12, 14, 15, 16				
		1	2, 6	L	51, 52, 54, 55, 56				
		1	3, 7	L	12, 15, 16				
22									BRACKET, Cup Holder
	05125038AA	1	2, 6	L	51, 52, 54, 55, 56				
		1	3, 7	L	12, 15, 16				
		1	2, 6	L	11, 12, 14, 15, 16				
23									HOLDER, Cup
	05125041AA	1	2, 6	L	11, 12, 14, 15, 16				
		1	2, 6	L	51, 52, 54, 55, 56				
		1	3, 7	L	12, 15, 16				
24									BIN, Storage
	05104496AA	1	6, 2	L	11, 12, 14, 15, 16				
		1	2, 6	L	51, 52, 54, 55, 56				
		1	3, 7	L	12, 15, 16				
25		1							BIN, Storage, (NOT SERVICED)

SPRINTER (VA)

SERIES	LINE	BODY	ENGINE	TRANSMISSION
L = LOWLINE	3 = HD DODGE 2WD 6 = Lt. Duty DODGE 4WD 2 = Med. Duty DODGE 2WD 7 = Med. Duty DODGE 4WD	55 = Wagon 140" 54 = Wagon 118" 52 = Wagon 140" 51 = Wagon 118" 12 = Van 140" 11 = Van 118" 06 = Front Section 158" 14 = Van 118" 15 = Van 140" 16 = Van 158" 56 = Wagon 158" 01 = Chassis Forward Control 118" 02 = Chassis Forward Control 140"	EX8 = Engine-2.7L I5 Mercedes Turbo Diesel	DGJ = Transmission-5-Spd. Automatic,W5A580

AR = use ase required - = Non illustrrated part

Sunvisors, Grabhandles, Shelf and Attaching Parts
Figure IVA-120

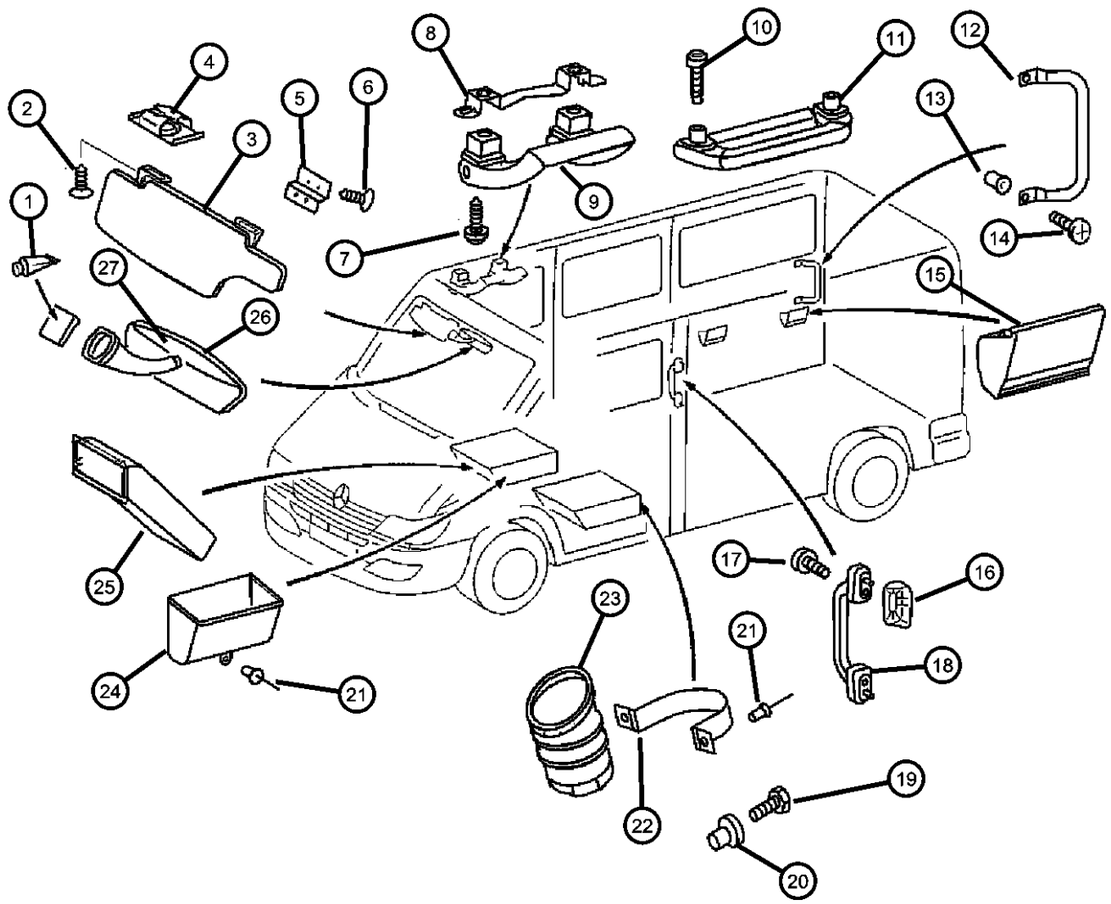

ITEM	PART NUMBER	QTY	LINE	SERIES	BODY	ENGINE	TRANS	TRIM	DESCRIPTION
26									MIRROR, Inside Rear View
	05104435AA	1	3, 7	L	12, 15, 16				
		1	2, 6	L	11, 12, 14, 15, 16				
		1	2, 6	L	51, 52, 54, 55, 56				
27									BUTTON, Rear View Mirror
	05104241AA	1	2, 6	L	11, 12, 14, 15, 16				
		1	2, 6	L	51, 52, 54, 55, 56				
		1	3, 7	L	12, 15, 16				

SPRINTER (VA)

SERIES	LINE	BODY	ENGINE	TRANSMISSION
L = LOWLINE	3 = HD DODGE 2WD 6 = Lt. Duty DODGE 4WD 2 = Med. Duty DODGE 2WD 7 = Med. Duty DODGE 4WD	55 = Wagon 140" 54 = Wagon 118" 52 = Wagon 140" 51 = Wagon 118" 12 = Van 140" 11 = Van 118" 06 = Front Section 158" 14 = Van 118" 15 = Van 140" 16 = Van 158" 56 = Wagon 158" 01 = Chassis Forward Control 118" 02 = Chassis Forward Control 140"	EX8 = Engine-2.7L I5 Mercedes Turbo Diesel	DGJ = Transmission-5-Spd. Automatic,W5A580

AR = use ase required - = Non illustrrated part

Inner Panels - Fabric
Figure IVA-210

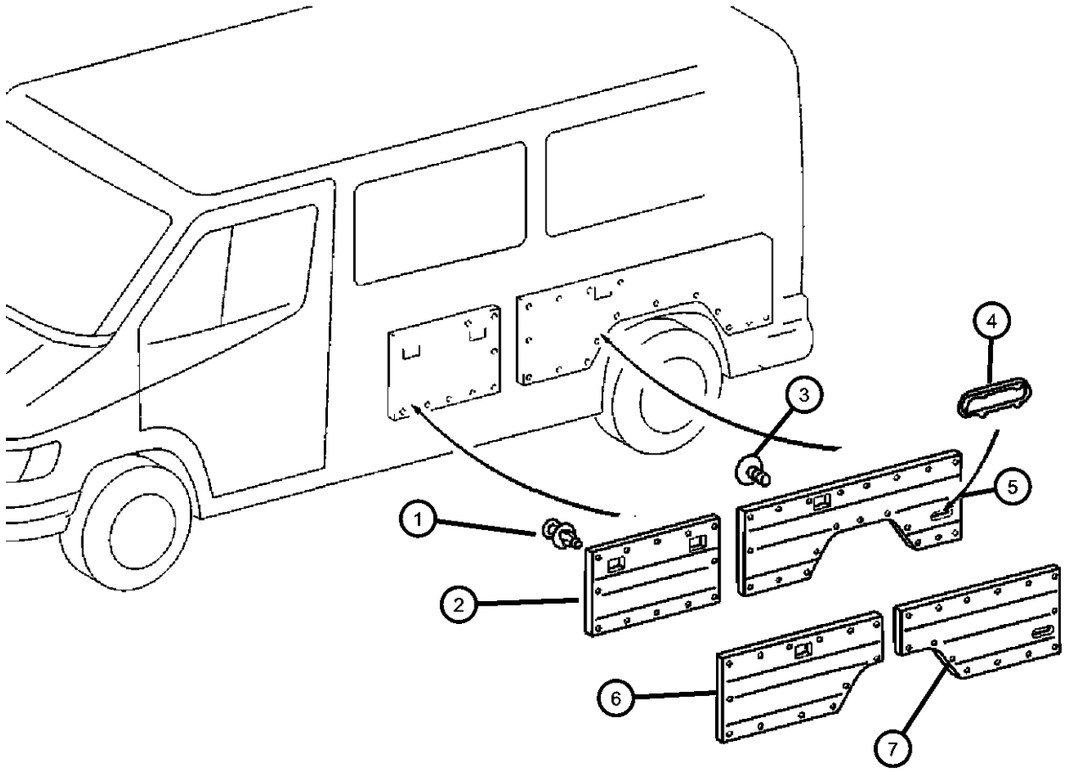

ITEM	PART NUMBER	QTY	LINE	SERIES	BODY	ENGINE	TRANS	TRIM	DESCRIPTION
1									PIN, Push
	06104895AA	10	2, 6	L	11, 12, 14, 15, 16				
		10	2, 6	L	51, 52, 54, 55, 56				
		10	3, 7	L	12, 15, 16				
2									PANEL, Inner
	05123006AA	1	2, 6	L	11, 12, 14, 15, 16				Left
		1	2, 6	L	51, 52, 54, 55, 56				Left
		1	3, 7	L	12, 15, 16				Left
	05123007AA	1	2, 6	L	11, 12, 14, 15, 16				Right
		1	2, 6	L	51, 52, 54, 55, 56				Right
		1	3, 7	L	12, 15, 16				Right
3									PLUG, Rear Seatbelt Hole
	05125988AA	4	2, 6	L	51, 54				
		4	2, 6	L	52, 55				
		6	2, 6	L	56				
4									EXHAUSTER, Quarter Panel
	05123426AA	2	2, 6	L	11, 12, 14, 15, 16				
		2	3, 7	L	12, 15, 16				
	1AS83JB5AA	2	2, 6	L	51, 52, 54, 55, 56				
5									PANEL, Quarter Trim
	05123014AA	1	2, 6	L	12, 15				Used With Four Fold Loudspeakers
		1	2, 6	L	52, 55				Used With Four Fold Loudspeakers
		1	3, 7	L	12, 15				Used With Four Fold Loudspeakers
6									PANEL, Quarter Trim

SPRINTER (VA)

SERIES	LINE	BODY	ENGINE	TRANSMISSION
L = LOWLINE	3 = HD DODGE 2WD 6 = Lt. Duty DODGE 4WD 2 = Med. Duty DODGE 2WD 7 = Med. Duty DODGE 4WD	55 = Wagon 140" 54 = Wagon 118" 52 = Wagon 140" 51 = Wagon 118" 12 = Van 140" 11 = Van 118" 06 = Front Section 158" 14 = Van 118" 15 = Van 140" 16 = Van 158" 56 = Wagon 158" 01 = Chassis Forward Control 118" 02 = Chassis Forward Control 140"	EX8 = Engine-2.7L I5 Mercedes Turbo Diesel	DGJ = Transmission-5-Spd. Automatic,W5A580

AR = use ase required - = Non illustrrated part

Inner Panels - Fabric
Figure IVA-210

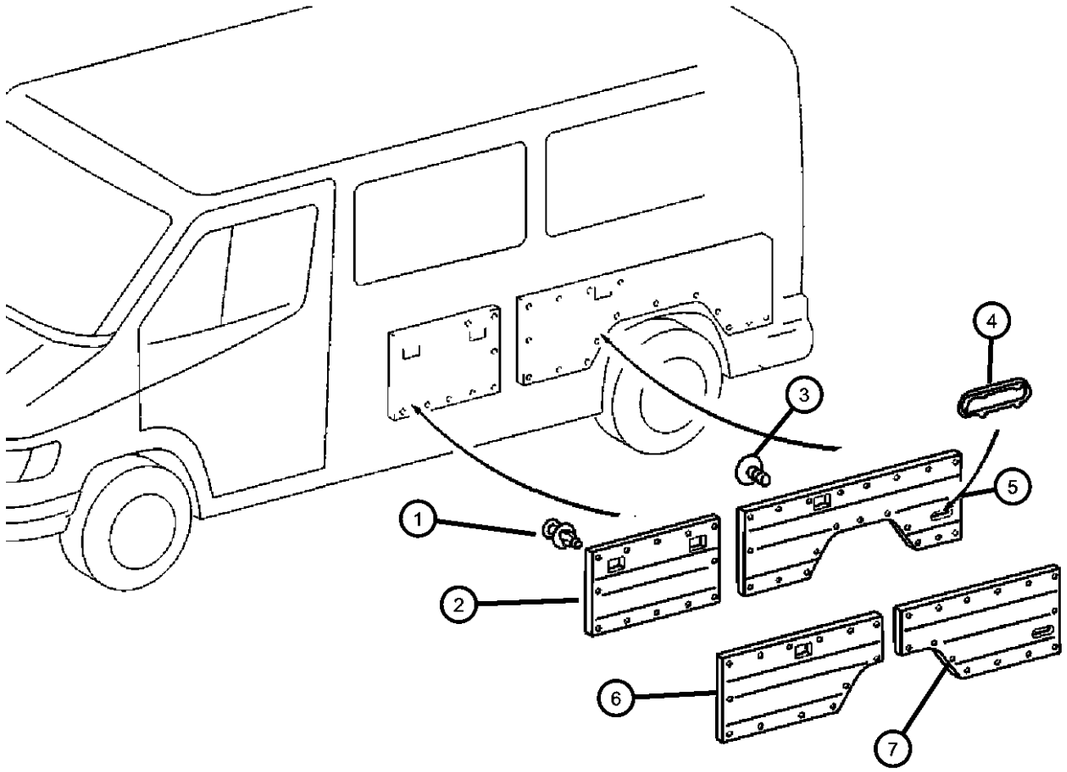

ITEM	PART NUMBER	QTY	LINE	SERIES	BODY	ENGINE	TRANS	TRIM	DESCRIPTION
	05123020AA	1	2, 6	L	16				In Front Of Wheelhouse, Without Loudspeaker, Left
		1	2, 6	L	56				In Front Of Wheelhouse, Without Loudspeaker, Left
		1	3, 7	L	16				In Front Of Wheelhouse, Without Loudspeaker, Left
	05123023AA	1	2, 6	L	16				In Front Of Wheelhouse, Without Loudspeaker, Right
		1	2, 6	L	56				In Front Of Wheelhouse, Without Loudspeaker, Right
		1	3, 7	L	16				In Front Of Wheelhouse, Without Loudspeaker, Right
	05123032AA	1	2, 6	L	16				In Front Of Wheelhouse, With Loudspeaker, Right
		1	2, 6	L	56				In Front Of Wheelhouse, With Loudspeaker, Right
		1	3, 7	L	16				In Front Of Wheelhouse, With Loudspeaker, Right
	05123029AA	1	2, 6	L	16				In Front Of Wheelhouse, With Loudspeaker, Left
		1	2, 6	L	56				In Front Of Wheelhouse, With Loudspeaker, Left
		1	3, 7	L	16				In Front Of Wheelhouse, With Loudspeaker, Left
7									PANEL, Quarter Trim
	05123025AA	1	2, 6	L	16				Behind the Wheel Arch, Left
		1	2, 6	L	56				Behind the Wheel Arch, Left
		1	3, 7	L	16				Behind the Wheel Arch, Left
	05123027AA	1	2, 6	L	16				Behind the Wheel Arch, Right
		1	2, 6	L	56				Behind the Wheel Arch, Right
		1	3, 7	L	16				Behind the Wheel Arch, Right

SPRINTER (VA)

SERIES	LINE	BODY	ENGINE	TRANSMISSION
L = LOWLINE	3 = HD DODGE 2WD 6 = Lt. Duty DODGE 4WD 2 = Med. Duty DODGE 2WD 7 = Med. Duty DODGE 4WD	55 = Wagon 140" 54 = Wagon 118" 52 = Wagon 140" 51 = Wagon 118" 12 = Van 140" 11 = Van 118" 06 = Front Section 158" 14 = Van 118" 15 = Van 140" 16 = Van 158" 56 = Wagon 158" 01 = Chassis Forward Control 118" 02 = Chassis Forward Control 140"	EX8 = Engine-2.7L I5 Mercedes Turbo Diesel	DGJ = Transmission-5-Spd. Automatic,W5A580

AR = use ase required - = Non illustrrated part

Inner Panels - Cab
Figure IVA-215

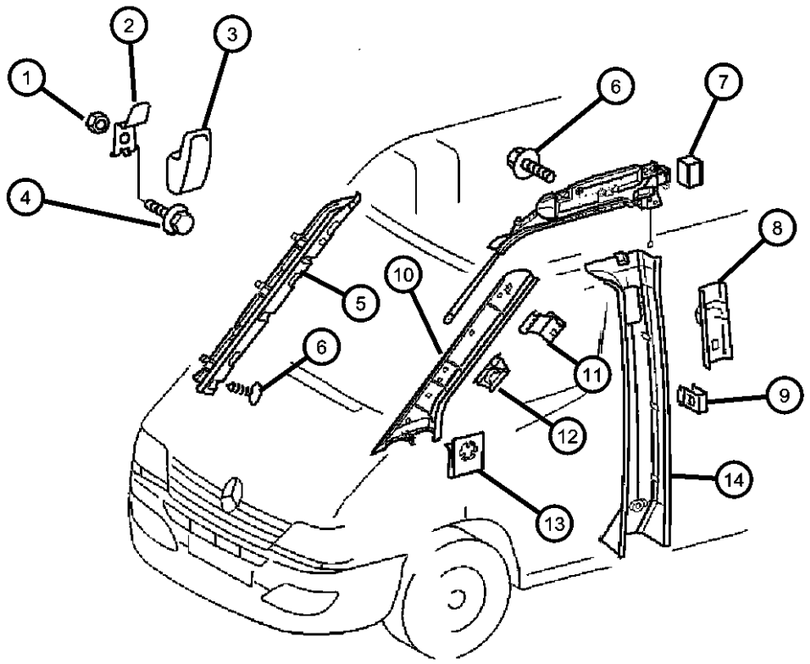

ITEM	PART NUMBER	QTY	LINE	SERIES	BODY	ENGINE	TRANS	TRIM	DESCRIPTION
1	06104724AA	1	2, 6	L	01, 02, 06				NUT, Hex
2									HOOK, Coat
	05124273AA	1	3, 7	L	02, 06				
		1	2, 6	L	01, 02, 06				
3									HANGER, Coat
	0ZF49CS8AA	1	2, 6	L	06, 01, 02			-AA	
		1	3, 7	L	02, 06			-AA	
4									SCREW
	06104172AA	2	3, 7	L	12, 15, 16				
		2	2, 6	L	11, 12, 14, 15, 16				
		2	2, 6	L	51, 52, 54, 55, 56				
5									FILLER
	05104273AA	1	2, 6	L	11, 12, 14, 15, 16				Right
		1	2, 6	L	51, 52, 54, 55, 56				Right
		1	3, 7	L	12, 15, 16				Right
	05123185AA	1	3, 7	L	12, 15, 16				Left
		1	2, 6	L	11, 12, 14, 15, 16				Left
		1	2, 6	L	51, 52, 54, 55, 56				Left
6									SCREW
	06104610AA	5	2, 6	L	11, 12, 14, 15, 16				
		5	2, 6	L	51, 52, 54, 55, 56				
		5	3, 7	L	12, 15, 16				
7		5							SPACER, (NOT SERVICED)
8									COVER, Seat Belt Guide
	05104275AA	1	2, 6	L	11, 12, 14, 15, 16				

SPRINTER (VA)

SERIES	LINE	BODY	ENGINE	TRANSMISSION
L = LOWLINE	3 = HD DODGE 2WD 6 = Lt. Duty DODGE 4WD 2 = Med. Duty DODGE 2WD 7 = Med. Duty DODGE 4WD	55 = Wagon 140" 54 = Wagon 118" 52 = Wagon 140" 51 = Wagon 118" 12 = Van 140" 11 = Van 118" 06 = Front Section 158" 14 = Van 118" 15 = Van 140" 16 = Van 158" 56 = Wagon 158" 01 = Chassis Forward Control 118" 02 = Chassis Forward Control 140"	EX8 = Engine-2.7L I5 Mercedes Turbo Diesel	DGJ = Transmission-5-Spd. Automatic,W5A580

Inner Panels - Cab
Figure IVA-215

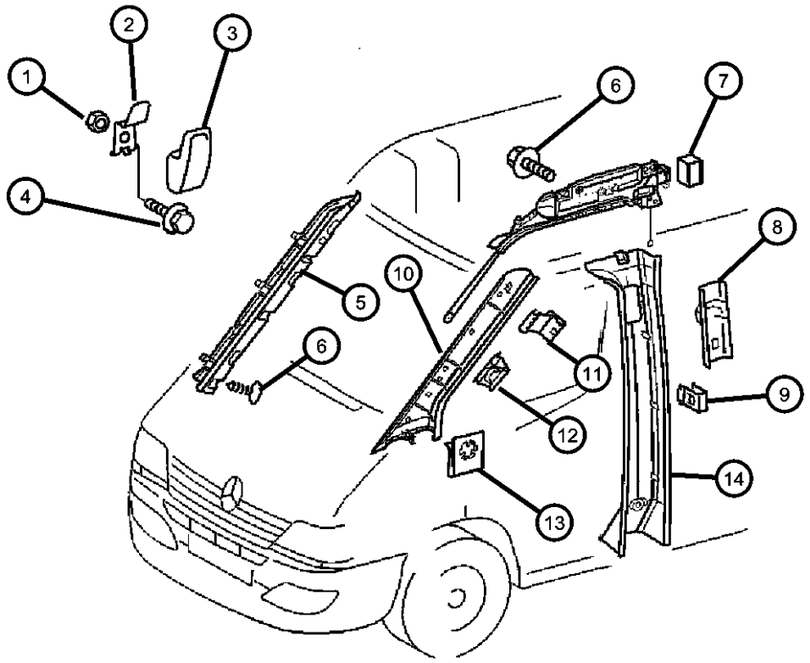

ITEM	PART NUMBER	QTY	LINE	SERIES	BODY	ENGINE	TRANS	TRIM	DESCRIPTION
		1	2, 6	L	51, 52, 54, 55, 56				
9									CLIP, Trim
	05125575AA	5	2, 6	L	11, 12, 14, 15, 16				
		5	2, 6	L	51, 52, 54, 55, 56				
		5	3, 7	L	12, 15, 16				
10									PANEL, A Pillar Trim
	05104276AA	1	2, 6	L	11, 12, 14, 15, 16				Left
		1	2, 6	L	51, 52, 54, 55, 56				Left
		1	3, 7	L	12, 15, 16				Left
	05123043AA	1	2, 6	L	11, 12, 14, 15, 16				With Cell Phone Prep Package, Left
		1	3, 7	L	12, 15, 16				With Cell Phone Prep Package, Left
	05123046AA	1	2, 6	L	11, 12, 14, 15, 16				Right
		1	2, 6	L	51, 52, 54, 55, 56				Right
		1	3, 7	L	12, 15, 16				Right
		1	2, 6	L	51, 52, 54, 55, 56				With Cell Phone Prep Package, Left
11		1							CLIP, (NOT SERVICED),
12									CLIP, Trim
	05125575AA	5	2, 6	L	11, 12, 14, 15, 16				
		5	2, 6	L	51, 52, 54, 55, 56				
		5	3, 7	L	12, 15, 16				
13		5							CLIP, (NOT SERVICED)
14									PANEL, B Pillar Trim

SPRINTER (VA)

SERIES	LINE	BODY	ENGINE	TRANSMISSION
L = LOWLINE	3 = HD DODGE 2WD 6 = Lt. Duty DODGE 4WD 2 = Med. Duty DODGE 2WD 7 = Med. Duty DODGE 4WD	55 = Wagon 140" 54 = Wagon 118" 52 = Wagon 140" 51 = Wagon 118" 12 = Van 140" 11 = Van 118" 06 = Front Section 158" 14 = Van 118" 15 = Van 140" 16 = Van 158" 56 = Wagon 158" 01 = Chassis Forward Control 118" 02 = Chassis Forward Control 140"	EX8 = Engine-2.7L I5 Mercedes Turbo Diesel	DGJ = Transmission-5-Spd. Automatic,W5A580

Inner Panels - Cab
Figure IVA-215

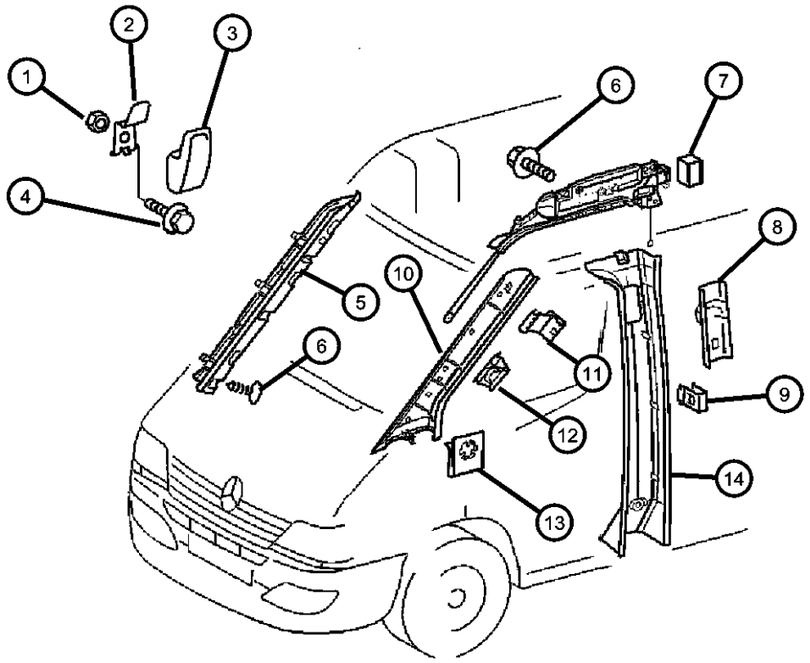

ITEM	PART NUMBER	QTY	LINE	SERIES	BODY	ENGINE	TRANS	TRIM	DESCRIPTION
	05104290AA	1	2, 6	L	11, 12, 14, 15, 16				With Partition, With Passable Partition, Right
	05104288AA	1	2, 6	L	11, 12, 14, 15, 16				With Partition, Left
		1	3, 7	L	12, 15, 16				With Partition, Left
	05104289AA	1	2, 6	L	11, 12, 14, 15, 16				With Partition, With Non Passable Partition, Right
		1	3, 7	L	12, 15, 16				With Partition, With Non Passable Partition, Right
		1	3, 7	L	12, 15, 16				With Partition, With Passable Partition, Right
	05123267AA	1	2, 6	L	11, 12, 14, 15, 16				Without Left Sliding Door, Left
		1	2, 6	L	51, 52, 54, 55, 56				Without Left Sliding Door, Left
		1	3, 7	L	12, 15, 16				Without Left Sliding Door, Left
	05123275AA	1	2, 6	L	11, 12, 14, 15, 16				With Left Sliding Door, Without Grab Handle, Load Ring, Left
		1	2, 6	L	51, 52, 54, 55, 56				With Left Sliding Door, Without Grab Handle, Load Ring, Left
		1	3, 7	L	12, 15, 16				With Left Sliding Door, Without Grab Handle, Load Ring, Left
	05123285AA	1	2, 6	L	11, 12, 14, 15, 16				With Left Sliding Door and Load Ring, Without Grab Handle, Left
		1	2, 6	L	51, 52, 54, 55, 56				With Left Sliding Door and Load Ring, Without Grab Handle, Left
		1	3, 7	L	12, 15, 16				With Left Sliding Door and Load Ring, Without Grab Handle, Left
	05123287AA	1	2, 6	L	11, 12, 14, 15, 16				With Right Sliding Door and Load Ring, Without Grab Handle, Right
		1	2, 6	L	51, 52, 54, 55, 56				With Right Sliding Door and Load Ring, Without Grab Handle, Right
		1	3, 7	L	12, 15, 16				With Right Sliding Door and Load Ring, Without Grab Handle, Right

SPRINTER (VA)

SERIES	LINE	BODY	ENGINE	TRANSMISSION
L = LOWLINE	3 = HD DODGE 2WD 6 = Lt. Duty DODGE 4WD 2 = Med. Duty DODGE 2WD 7 = Med. Duty DODGE 4WD	55 = Wagon 140" 54 = Wagon 118" 52 = Wagon 140" 51 = Wagon 118" 12 = Van 140" 11 = Van 118" 06 = Front Section 158" 14 = Van 118" 15 = Van 140" 16 = Van 158" 56 = Wagon 158" 01 = Chassis Forward Control 118" 02 = Chassis Forward Control 140"	EX8 = Engine-2.7L I5 Mercedes Turbo Diesel	DGJ = Transmission-5-Spd. Automatic,W5A580

Inner Panels - Cab
Figure IVA-215

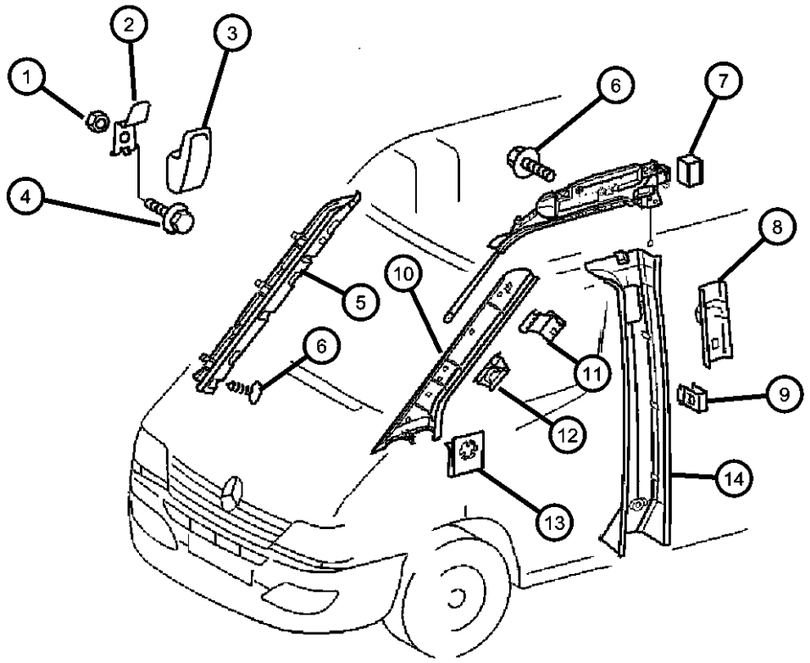

ITEM	PART NUMBER	QTY	LINE	SERIES	BODY	ENGINE	TRANS	TRIM	DESCRIPTION
	05123304AA	1	2, 6	L	11, 12, 14, 15, 16				With Left Sliding Door and Grab Handle Without Load Ring, Left
		1	2, 6	L	51, 52, 54, 55, 56				With Left Sliding Door and Grab Handle Without Load Ring, Left
		1	3, 7	L	12, 15, 16				With Left Sliding Door and Grab Handle Without Load Ring, Left
	05123306AA	1	2, 6	L	11, 12, 14, 15, 16				With Right Sliding Door and Grab Handle Without Load Ring, Right
		1	2, 6	L	51, 52, 54, 55, 56				With Right Sliding Door and Grab Handle Without Load Ring, Right
		1	3, 7	L	12, 15, 16				With Right Sliding Door and Grab Handle Without Load Ring, Right
	05123308AA	1	2, 6	L	11, 12, 14, 15, 16				With Left Sliding Door, Grab Handle and Load Ring, Left
		1	2, 6	L	51, 52, 54, 55, 56				With Left Sliding Door, Grab Handle and Load Ring, Left
		1	3, 7	L	12, 15, 16				With Left Sliding Door, Grab Handle and Load Ring, Left
	05123310AA	1	2, 6	L	11, 12, 14, 15, 16				With Right Sliding Door, Grab Handle and Load Ring, Right
		1	2, 6	L	51, 52, 54, 55, 56				With Right Sliding Door, Grab Handle and Load Ring, Right
		1	3, 7	L	12, 15, 16				With Right Sliding Door, Grab Handle and Load Ring, Right
-15									CLIP, U Type
	05125582AA	5	2, 6	L	01, 02, 06				
		5	2, 6	L	11, 12, 14, 15, 16				
		5	2, 6	L	51, 52, 54, 55, 56				

SPRINTER (VA)

SERIES	LINE	BODY	ENGINE	TRANSMISSION
L = LOWLINE	3 = HD DODGE 2WD 6 = Lt. Duty DODGE 4WD 2 = Med. Duty DODGE 2WD 7 = Med. Duty DODGE 4WD	55 = Wagon 140" 54 = Wagon 118" 52 = Wagon 140" 51 = Wagon 118" 12 = Van 140" 11 = Van 118" 06 = Front Section 158" 14 = Van 118" 15 = Van 140" 16 = Van 158" 56 = Wagon 158" 01 = Chassis Forward Control 118" 02 = Chassis Forward Control 140"	EX8 = Engine-2.7L I5 Mercedes Turbo Diesel	DGJ = Transmission-5-Spd. Automatic,W5A580

Inner Panels - Plywood
Figure IVA-220

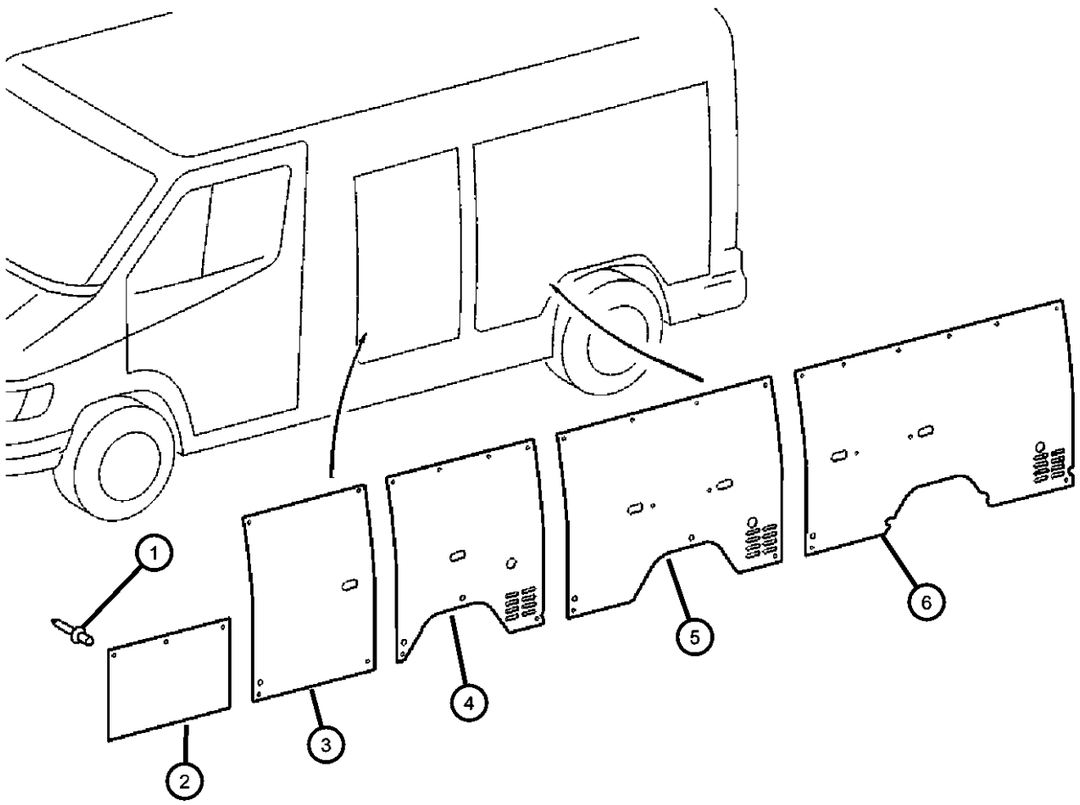

ITEM	PART NUMBER	QTY	LINE	SERIES	BODY	ENGINE	TRANS	TRIM	DESCRIPTION
1									RIVET
	06104865AA	10	2, 6	L	11, 12, 14, 15, 16				
		10	2, 6	L	51, 52, 54, 55, 56				
		10	3, 7	L	12, 15, 16				
2									PANEL, Inner
	05104295AA	1	2, 6	L	11, 12, 14, 15, 16				
		1	3, 7	L	12, 15, 16				
3									PANEL, Inner
	05104296AA	1	3, 7	L	12, 15, 16				
		2	2, 6	L	11, 12, 14, 15, 16				
4	05131868AA	2	2, 6	L	11, 14				PANEL, Side Trim
5									PANEL, Side Trim
	05123247AA	2	2, 6	L	12, 15				
		2	3, 7	L	12, 15				
6									PANEL, Quarter Trim
	05104294AA	2	2, 6	L	16				
		2	3, 7	L	16				

SPRINTER (VA)

SERIES	LINE	BODY	ENGINE	TRANSMISSION
L = LOWLINE	3 = HD DODGE 2WD 6 = Lt. Duty DODGE 4WD 2 = Med. Duty DODGE 2WD 7 = Med. Duty DODGE 4WD	55 = Wagon 140" 54 = Wagon 118" 52 = Wagon 140" 51 = Wagon 118" 12 = Van 140" 11 = Van 118" 06 = Front Section 158" 14 = Van 118" 15 = Van 140" 16 = Van 158" 56 = Wagon 158" 01 = Chassis Forward Control 118" 02 = Chassis Forward Control 140"	EX8 = Engine-2.7L I5 Mercedes Turbo Diesel	DGJ = Transmission-5-Spd. Automatic,W5A580

AR = use ase required - = Non illustrrated part

Inner Panel, Hard Fiber
Figure IVA-221

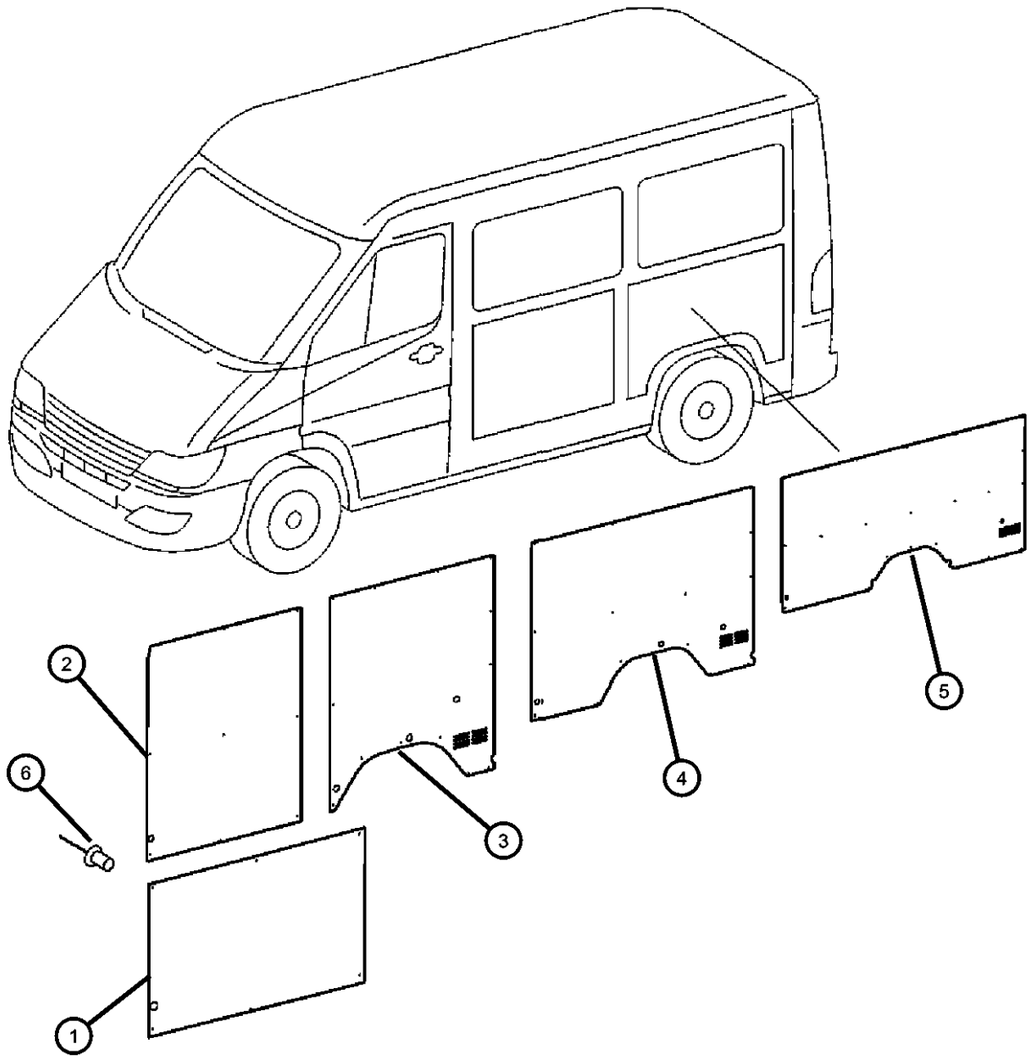

ITEM	PART NUMBER	QTY	LINE	SERIES	BODY	ENGINE	TRANS	TRIM	DESCRIPTION
1									PANEL, Cargo Compartment, Without Windows
	05123222AA	1	2, 6	L	11, 12, 14, 15, 16				
		1	3, 7	L	12, 15, 16				
2									PANEL, Cargo Compartment, Without Windows
	05123223AA	1	2, 6	L	11, 12, 14, 15, 16				
		1	3, 7	L	12, 15, 16				
3	05131857AA	2	2, 6	L	11, 14				PANEL, Quarter TrimRight & Left
4									PANEL, Quarter Trim
	05123224AA	2	2, 6	L	12, 15				Right & Left
		2	3, 7	L	12, 15				Right & Left
5									PANEL, Quarter Trim
	05123225AA	2	2, 6	L	16				Right & Left
		2	3, 7	L	16				Right & Left
6									RIVET
	06104865AA	10	2, 6	L	11, 12, 14, 15, 16				
		10	3, 7	L	12, 15, 16				

SPRINTER (VA)

SERIES	LINE	BODY	ENGINE	TRANSMISSION
L = LOWLINE	3 = HD DODGE 2WD 6 = Lt. Duty DODGE 4WD 2 = Med. Duty DODGE 2WD 7 = Med. Duty DODGE 4WD	55 = Wagon 140" 54 = Wagon 118" 52 = Wagon 140" 51 = Wagon 118" 12 = Van 140" 11 = Van 118" 06 = Front Section 158" 14 = Van 118" 15 = Van 140" 16 = Van 158" 56 = Wagon 158" 01 = Chassis Forward Control 118" 02 = Chassis Forward Control 140"	EX8 = Engine-2.7L I5 Mercedes Turbo Diesel	DGJ = Transmission-5-Spd. Automatic,W5A580

AR = use ase required - = Non illustrrated part

Inner Panels
Figure IVA-225

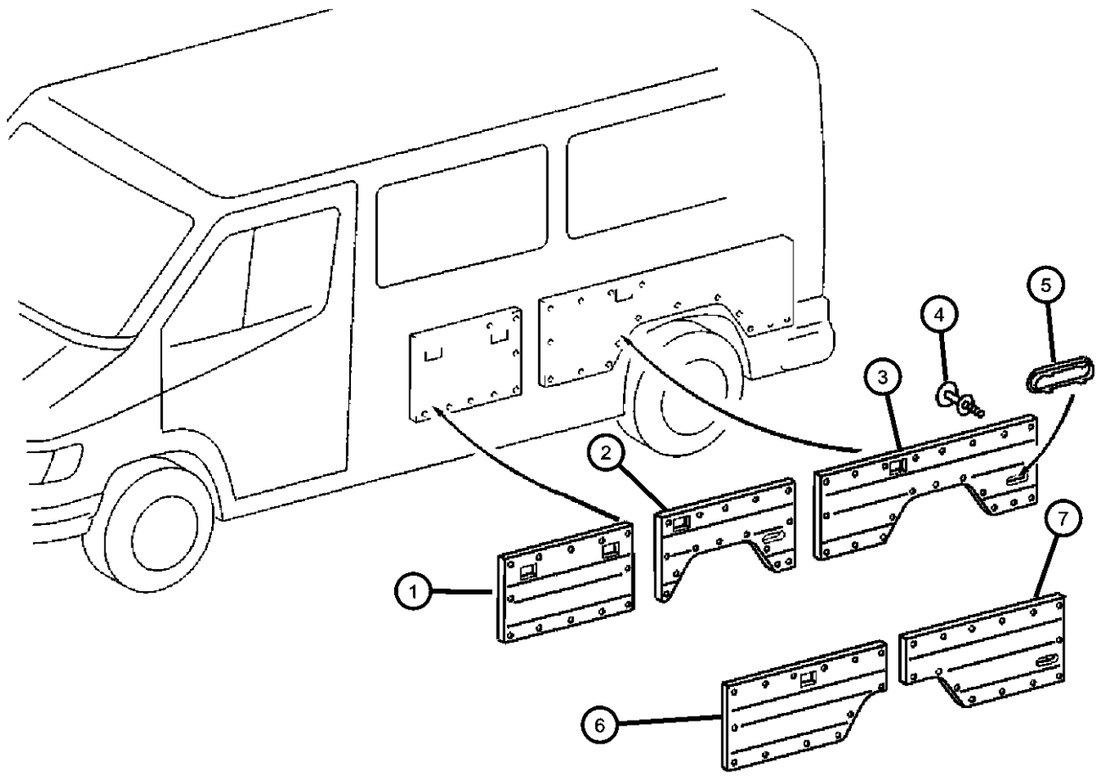

ITEM	PART NUMBER	QTY	LINE	SERIES	BODY	ENGINE	TRANS	TRIM	DESCRIPTION
1									PANEL, Cargo compartment
	05123228AA	1	2, 6	L	11, 12, 14, 15, 16				
		1	2, 6	L	51, 52, 54, 55, 56				
		1	3, 7	L	12, 15, 16				
2									PANEL, Cargo compartment
	05123233AA	1	2, 6	L	11, 14				Right
		1	2, 6	L	51, 54				Right
	05123231AA	1	2, 6	L	11, 14				Left
		1	2, 6	L	51, 54				Left
3									PANEL, Cargo compartment
	05123234AA	1	2, 6	L	12, 15				140 Inch Wheelbase, Left
		1	2, 6	L	52, 55				140 Inch Wheelbase, Left
		1	3, 7	L	12, 15				140 Inch Wheelbase, Left
	05123236AA	1	2, 6	L	12, 15				140 Inch Wheelbase, Right
		1	2, 6	L	52, 55				140 Inch Wheelbase, Right
		1	3, 7	L	12, 15				140 Inch Wheelbase, Right
4									PIN, Push
	05103553AA	9	2, 6	L	11, 12, 14, 15, 16				
		9	2, 6	L	51, 52, 54, 55, 56				
		9	3, 7	L	12, 15, 16				
5									EXHAUSTER, Quarter Panel
	1AS83JB5AA	2	2, 6	L	11, 12, 14, 15, 16				
		2	2, 6	L	51, 52, 54, 55, 56				
		2	3, 7	L	12, 15, 16				
6									PANEL, Cargo compartment
	05123238AA	1	2, 6	L	16				158 Inch Wheelbase, Left Front

SPRINTER (VA)

SERIES	LINE	BODY	ENGINE	TRANSMISSION
L = LOWLINE	3 = HD DODGE 2WD 6 = Lt. Duty DODGE 4WD 2 = Med. Duty DODGE 2WD 7 = Med. Duty DODGE 4WD	55 = Wagon 140" 54 = Wagon 118" 52 = Wagon 140" 51 = Wagon 118" 12 = Van 140" 11 = Van 118" 06 = Front Section 158" 14 = Van 118" 15 = Van 140" 16 = Van 158" 56 = Wagon 158" 01 = Chassis Forward Control 118" 02 = Chassis Forward Control 140"	EX8 = Engine-2.7L I5 Mercedes Turbo Diesel	DGJ = Transmission-5-Spd. Automatic,W5A580

Inner Panels
Figure IVA-225

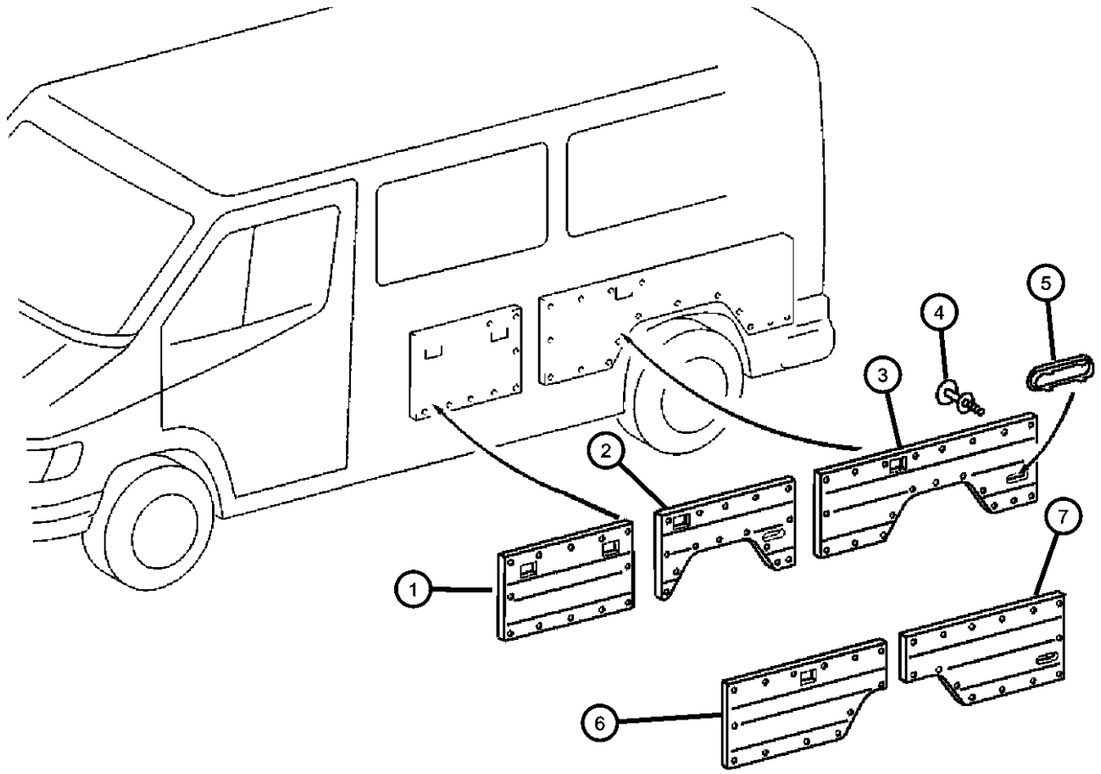

ITEM	PART NUMBER	QTY	LINE	SERIES	BODY	ENGINE	TRANS	TRIM	DESCRIPTION
		1	2, 6	L	56				158 Inch Wheelbase, Left Front
		1	3, 7	L	16				158 Inch Wheelbase, Left Front
	05123240AA	1	2, 6	L	16				158 Inch Wheelbase, Right Front
		1	2, 6	L	56				158 Inch Wheelbase, Right Front
		1	3, 7	L	16				158 Inch Wheelbase, Right Front
7									PANEL, Cargo compartment
	05123243AA	1	3, 7	L	16				158 Inch Wheelbase, Right Rear
	05123242AA	1	2, 6	L	16				158 Inch Wheelbase, Left Rear
		1	2, 6	L	56				158 Inch Wheelbase, Left Rear
		1	3, 7	L	16				158 Inch Wheelbase, Left Rear
		1	2, 6	L	16				158 Inch Wheelbase, Right Rear
		1	2, 6	L	56				158 Inch Wheelbase, Right Rear

SPRINTER (VA)

SERIES	LINE	BODY	ENGINE	TRANSMISSION
L = LOWLINE	3 = HD DODGE 2WD 6 = Lt. Duty DODGE 4WD 2 = Med. Duty DODGE 2WD 7 = Med. Duty DODGE 4WD	55 = Wagon 140" 54 = Wagon 118" 52 = Wagon 140" 51 = Wagon 118" 12 = Van 140" 11 = Van 118" 06 = Front Section 158" 14 = Van 118" 15 = Van 140" 16 = Van 158" 56 = Wagon 158" 01 = Chassis Forward Control 118" 02 = Chassis Forward Control 140"	EX8 = Engine-2.7L I5 Mercedes Turbo Diesel	DGJ = Transmission-5-Spd. Automatic,W5A580

AR = use ase required - = Non illustrrated part

Inner Paneling Window - Pillar In Cab
Figure IVA-230

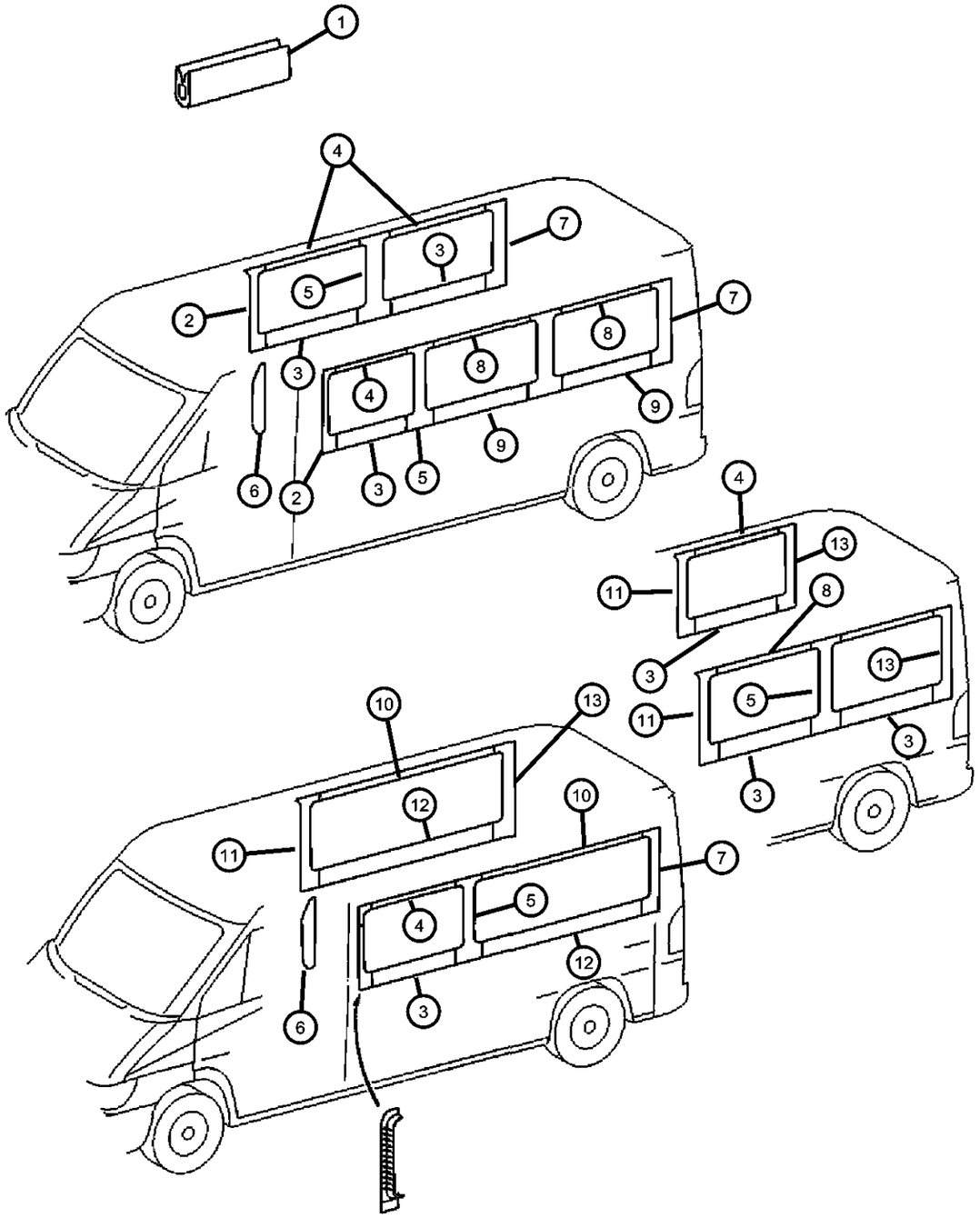

ITEM	PART NUMBER	QTY	LINE	SERIES	BODY	ENGINE	TRANS	TRIM	DESCRIPTION
1	05134108AA	1	2, 6	L	16				WEATHERSTRIP, Glass, 2 Meters Long
2									COVER, Rear Window Moulding
	05123334AA	1	2, 6	L	11, 12, 14, 15, 16				Side Window, Left
		1	2, 6	L	51, 52, 54, 55, 56				Side Window, Left
		1	3, 7	L	12, 15, 16				Side Window, Left
	05123365AA	1	2, 6	L	11, 12, 14, 15, 16				Side Window, Right
		1	2, 6	L	51, 52, 54, 55, 56				Side Window, Right
		1	3, 7	L	12, 15, 16				Side Window, Right
3									PANEL, Lower Rear
	05123366AA	2	2, 6	L	12, 15, 16				Lower Side Windows, Left, Right
		3	2, 6	L	11, 14				Lower Side Windows, Left, Right
		1	3, 7	L	12, 15, 16				Lower Side Windows, Left, Right
4									PANEL, Header
	05104293AA	2	2, 6	L	51, 52, 54, 55, 56				Upper, Window
		1	3, 7	L	12, 15, 16				Garnish, Upper, Window
		2	2, 6	L	11, 12, 14, 15, 16				Upper, Window
5									COVER, Rear Window Moulding
	05123335AA	2	2, 6	L	51, 52, 54, 55, 56				
		2	2, 6	L	11, 12, 14, 15, 16				
		2	3, 7	L	12, 15, 16				
6									PANEL, B Pillar Upper Trim
	05123367AA	1	2, 6	L	11, 12, 14, 15, 16				Right
		1	2, 6	L	51, 52, 54, 55, 56				Right
		1	3, 7	L	12, 15, 16				Right

SPRINTER (VA)

SERIES	LINE	BODY	ENGINE	TRANSMISSION
L = LOWLINE	3 = HD DODGE 2WD 6 = Lt. Duty DODGE 4WD 2 = Med. Duty DODGE 2WD 7 = Med. Duty DODGE 4WD	55 = Wagon 140" 54 = Wagon 118" 52 = Wagon 140" 51 = Wagon 118" 12 = Van 140" 11 = Van 118" 06 = Front Section 158" 14 = Van 118" 15 = Van 140" 16 = Van 158" 56 = Wagon 158" 01 = Chassis Forward Control 118" 02 = Chassis Forward Control 140"	EX8 = Engine-2.7L I5 Mercedes Turbo Diesel	DGJ = Transmission-5-Spd. Automatic,W5A580

AR = use ase required - = Non illustrrated part

Inner Paneling Window - Pillar In Cab
Figure IVA-230

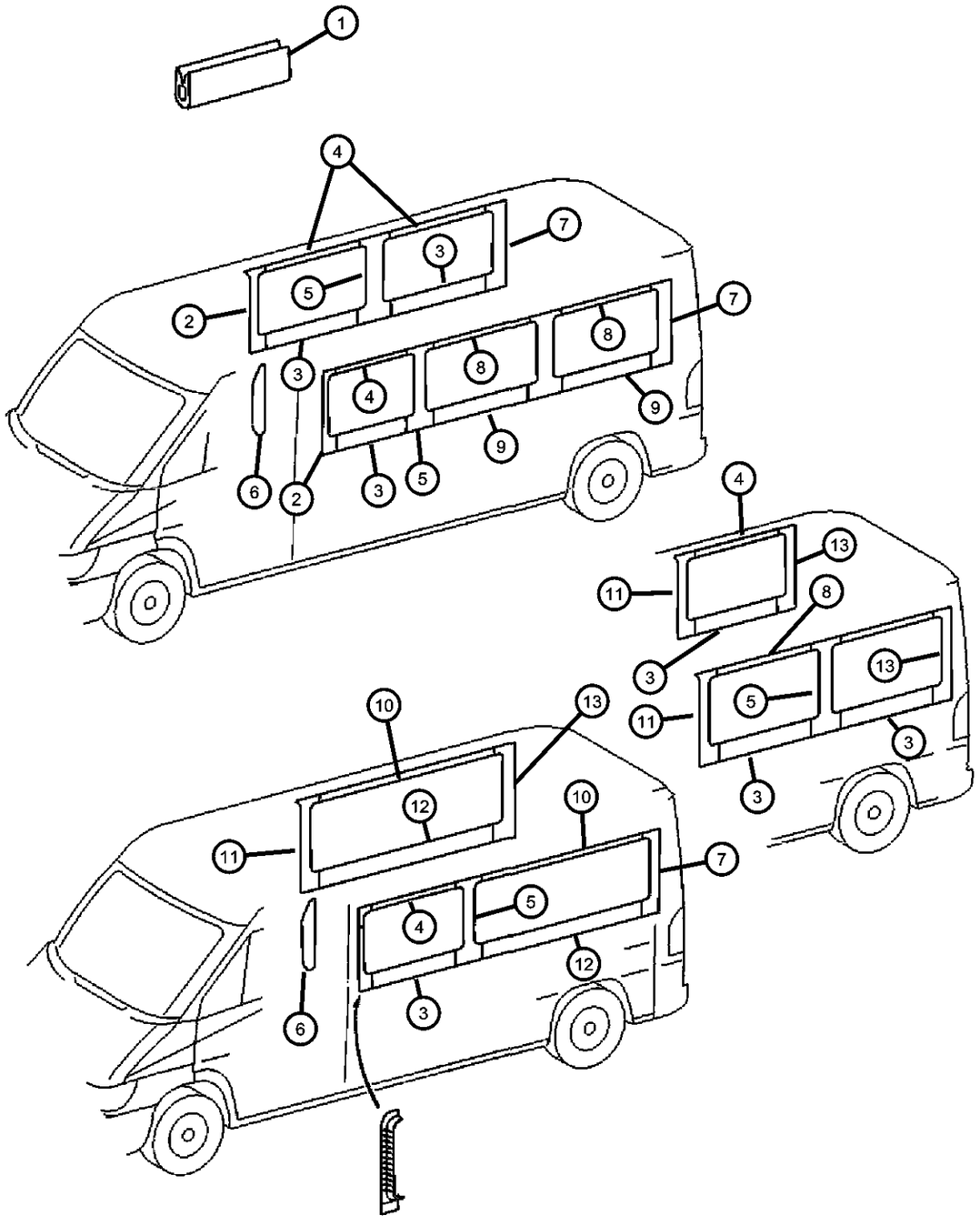

ITEM	PART NUMBER	QTY	LINE	SERIES	BODY	ENGINE	TRANS	TRIM	DESCRIPTION
	05123368AA	1	2, 6	L	11, 12, 14, 15, 16				Left
		1	2, 6	L	51, 52, 54, 55, 56				Left
		1	3, 7	L	12, 15, 16				Left
7									COVER, Rear Window Moulding
	05123337AA	1	2, 6	L	12, 15				
		1	2, 6	L	52, 55				
		1	3, 7	L	12, 15				
8									PANEL, Header
	05123332AA	4	2, 6	L	16				Garnish (Medium), Upper
		4	2, 6	L	56				Garnish (Medium), Upper
		4	3, 7	L	16				Garnish (Medium), Upper
9									PANEL, Lower Rear
	05123363AA	4	2, 6	L	16				Garnish (Medium), Lower
		4	2, 6	L	56				Garnish (Medium), Lower
		4	3, 7	L	16				Garnish (Medium), Lower
10									PANEL, Header
	05123333AA	2	2, 6	L	12, 15				Garnish (Long), Upper
		2	2, 6	L	52, 55				Garnish (Long), Upper
		2	3, 7	L	12, 15				Garnish (Long), Upper
11									COVER, Rear Window Moulding
	05123364AA	1	2, 6	L	51, 52, 54, 55, 56				Verdical Molding, Left
		1	3, 7	L	12, 15, 16				Verdical Molding, Left
	05123362AA	1	2, 6	L	11, 12, 14, 15, 16				Verdical Molding, Right
		1	2, 6	L	51, 52, 54, 55, 56				Verdical Molding, Right
		1	3, 7	L	12, 15, 16				Verdical Molding, Right

SPRINTER (VA)

SERIES	LINE	BODY	ENGINE	TRANSMISSION
L = LOWLINE	3 = HD DODGE 2WD 6 = Lt. Duty DODGE 4WD 2 = Med. Duty DODGE 2WD 7 = Med. Duty DODGE 4WD	55 = Wagon 140" 54 = Wagon 118" 52 = Wagon 140" 51 = Wagon 118" 12 = Van 140" 11 = Van 118" 06 = Front Section 158" 14 = Van 118" 15 = Van 140" 16 = Van 158" 56 = Wagon 158" 01 = Chassis Forward Control 118" 02 = Chassis Forward Control 140"	EX8 = Engine-2.7L I5 Mercedes Turbo Diesel	DGJ = Transmission-5-Spd. Automatic,W5A580

AR = use ase required - = Non illustrrated part

Inner Paneling Window - Pillar In Cab
Figure IVA-230

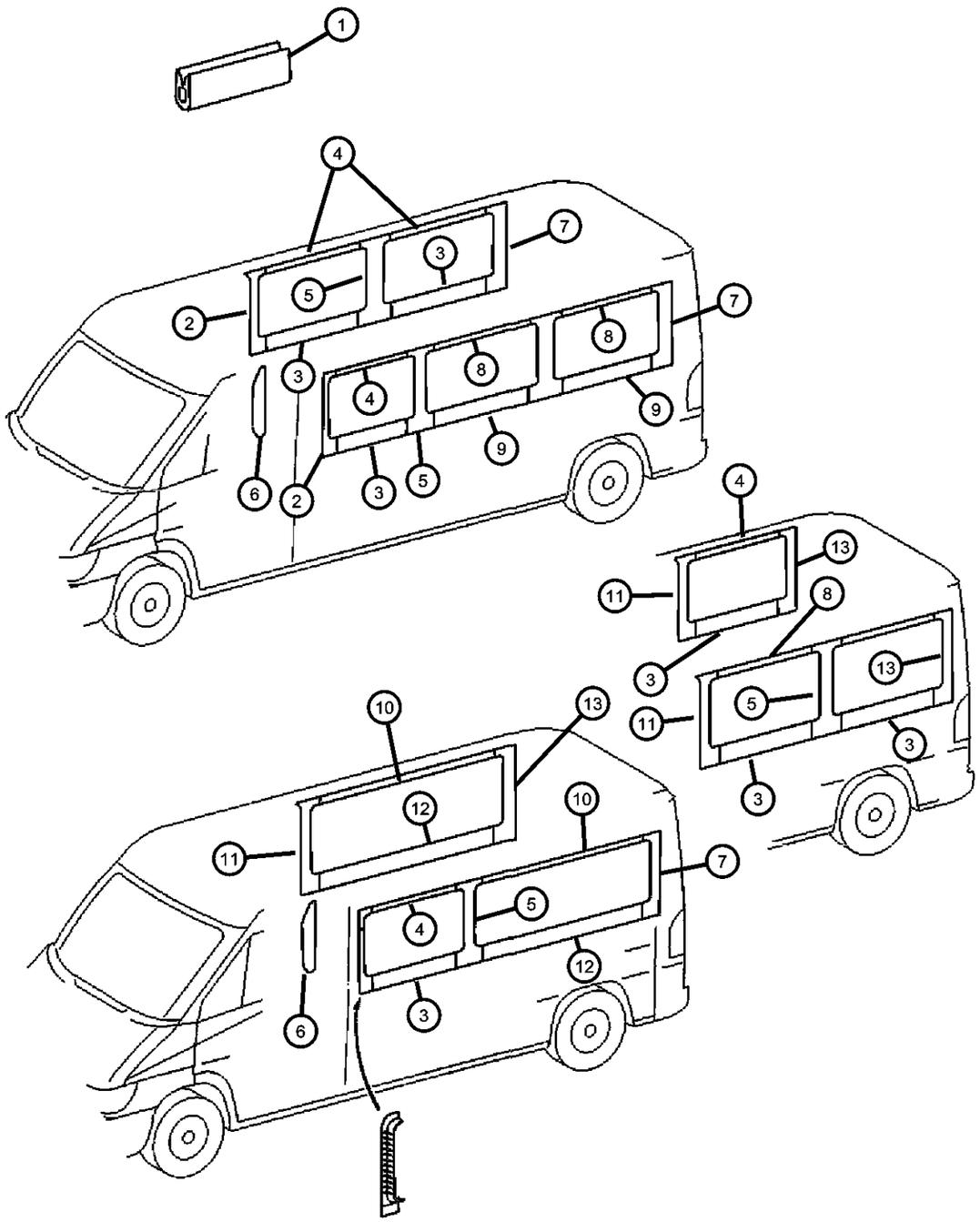

ITEM	PART NUMBER	QTY	LINE	SERIES	BODY	ENGINE	TRANS	TRIM	DESCRIPTION
		1	2, 6	L	11, 12, 14, 15, 16				Verdical Molding, Left
12									PANEL, Lower Rear
	05123369AA	2	2, 6	L	12, 15				Garnish (Long), Lower
		2	2, 6	L	52, 55				Garnish (Long), Lower
		2	3, 7	L	12, 15				Garnish (Long), Lower
13									COVER, Rear Window Moulding
	05123361AA	1	2, 6	L	12, 15				Right
		1	2, 6	L	52, 55				Right
		1	3, 7	L	12, 15				Right

SPRINTER (VA)

SERIES	LINE	BODY	ENGINE	TRANSMISSION
L = LOWLINE	3 = HD DODGE 2WD 6 = Lt. Duty DODGE 4WD 2 = Med. Duty DODGE 2WD 7 = Med. Duty DODGE 4WD	55 = Wagon 140" 54 = Wagon 118" 52 = Wagon 140" 51 = Wagon 118" 12 = Van 140" 11 = Van 118" 06 = Front Section 158" 14 = Van 118" 15 = Van 140" 16 = Van 158" 56 = Wagon 158" 01 = Chassis Forward Control 118" 02 = Chassis Forward Control 140"	EX8 = Engine-2.7L I5 Mercedes Turbo Diesel	DGJ = Transmission-5-Spd. Automatic,W5A580

AR = use ase required - = Non illustrrated part

Cargo Retainers - Without Windows
Figure IVA-235

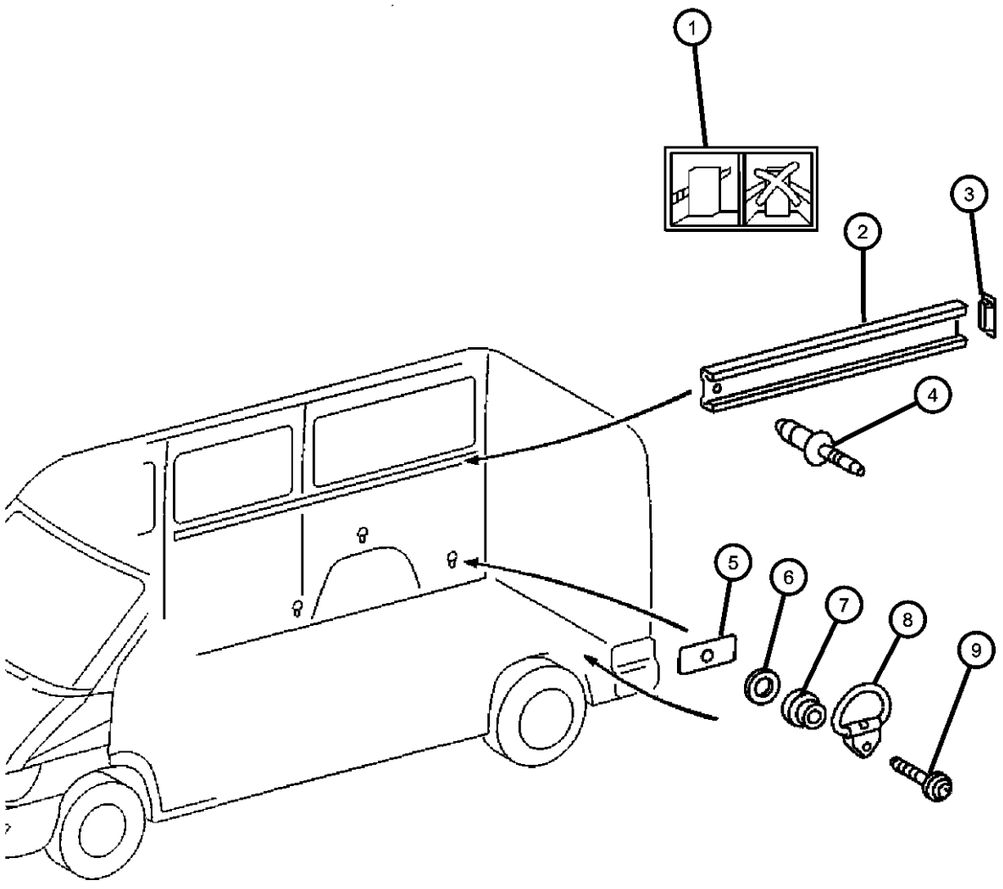

ITEM	PART NUMBER	QTY	LINE	SERIES	BODY	ENGINE	TRANS	TRIM	DESCRIPTION
1									LABEL
	05124356AA	1	2, 6	L	12, 15, 16				Cargo Tie Down
		1	3, 7	L	12, 15, 16				Cargo Tie Down
2									RAIL
	05121437AA	1	2, 6	L	12, 15				Cargo Retaning, Right & Left
		1	2, 6	L	11, 12, 14, 15				Cargo Retaning, Right & Left
3									END CAP, Side Rail
	05121423AA	4	2, 6	L	11, 12, 14, 15, 16				Right & Left
		4	3, 7	L	12, 15, 16				Right & Left
4									RIVET
	05125821AA	16	2, 6	L	12, 15				
		16	3, 7	L	12, 15				
5									NUT
	05103926AA	4	2, 6	L	11, 12, 14, 15				
		4	2, 6	L	51, 52, 54, 55				
		4	3, 7	L	12, 15				
6									WASHER
	05103726AA	8	2, 6	L	11, 12, 14, 15, 16				
		8	2, 6	L	51, 52, 54, 55, 56				
		7	3, 7	L	12, 15				
7									BUSHING
	05104544AA	8	2, 6	L	11, 12, 14, 15, 16				
		8	2, 6	L	51, 52, 54, 55, 56				
		8	3, 7	L	12, 15				
8									RING, RING-RETAINER

SPRINTER (VA)

SERIES	LINE	BODY	ENGINE	TRANSMISSION
L = LOWLINE	3 = HD DODGE 2WD 6 = Lt. Duty DODGE 4WD 2 = Med. Duty DODGE 2WD 7 = Med. Duty DODGE 4WD	55 = Wagon 140" 54 = Wagon 118" 52 = Wagon 140" 51 = Wagon 118" 12 = Van 140" 11 = Van 118" 06 = Front Section 158" 14 = Van 118" 15 = Van 140" 16 = Van 158" 56 = Wagon 158" 01 = Chassis Forward Control 118" 02 = Chassis Forward Control 140"	EX8 = Engine-2.7L I5 Mercedes Turbo Diesel	DGJ = Transmission-5-Spd. Automatic,W5A580

Cargo Retainers - Without Windows
Figure IVA-235

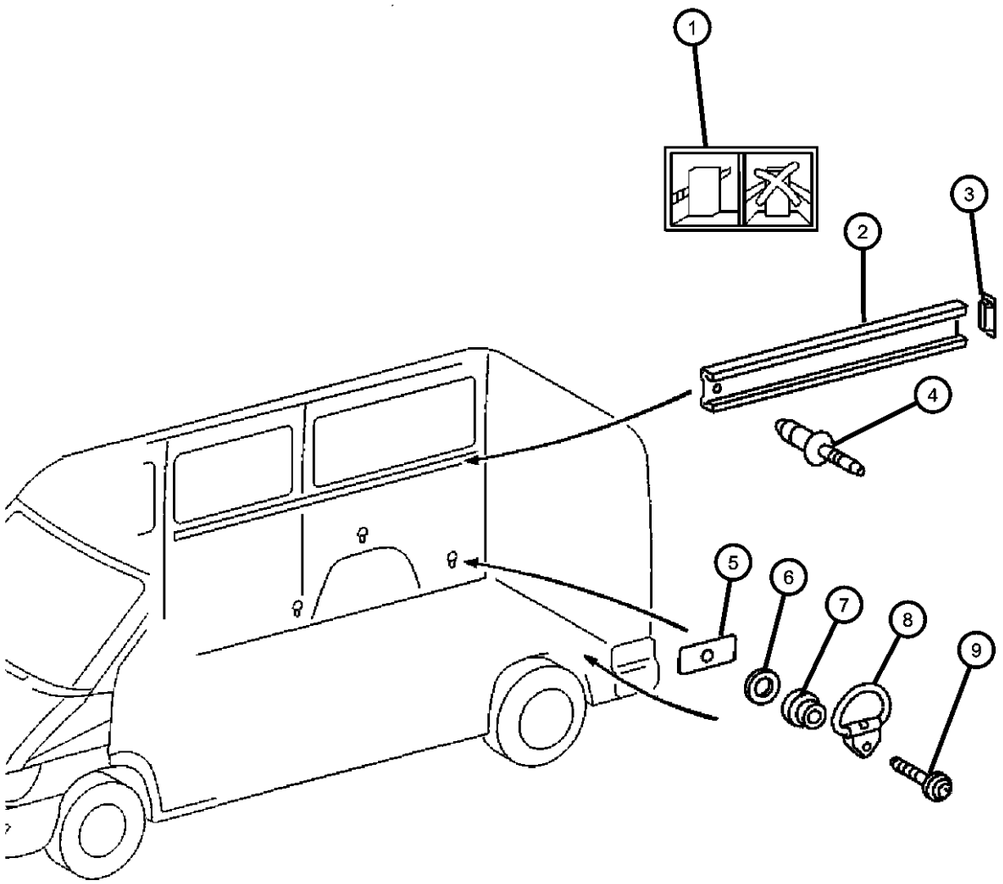

ITEM	PART NUMBER	QTY	LINE	SERIES	BODY	ENGINE	TRANS	TRIM	DESCRIPTION
	05104500AA	8	2, 6	L	51, 52, 54, 55, 56				
		8	3, 7	L	12, 15				
		8	2, 6	L	11, 12, 14, 15, 16				
9									BOLT, Hex Head
	05103816AA	8	3, 7	L	12, 15				
		8	2, 6	L	11, 12, 14, 15, 16				
		8	2, 6	L	51, 52, 54, 55, 56				

SPRINTER (VA)

SERIES	LINE	BODY	ENGINE	TRANSMISSION
L = LOWLINE	3 = HD DODGE 2WD 6 = Lt. Duty DODGE 4WD 2 = Med. Duty DODGE 2WD 7 = Med. Duty DODGE 4WD	55 = Wagon 140" 54 = Wagon 118" 52 = Wagon 140" 51 = Wagon 118" 12 = Van 140" 11 = Van 118" 06 = Front Section 158" 14 = Van 118" 15 = Van 140" 16 = Van 158" 56 = Wagon 158" 01 = Chassis Forward Control 118" 02 = Chassis Forward Control 140"	EX8 = Engine-2.7L I5 Mercedes Turbo Diesel	DGJ = Transmission-5-Spd. Automatic,W5A580

Cargo Retainers - With Windows
Figure IVA-240

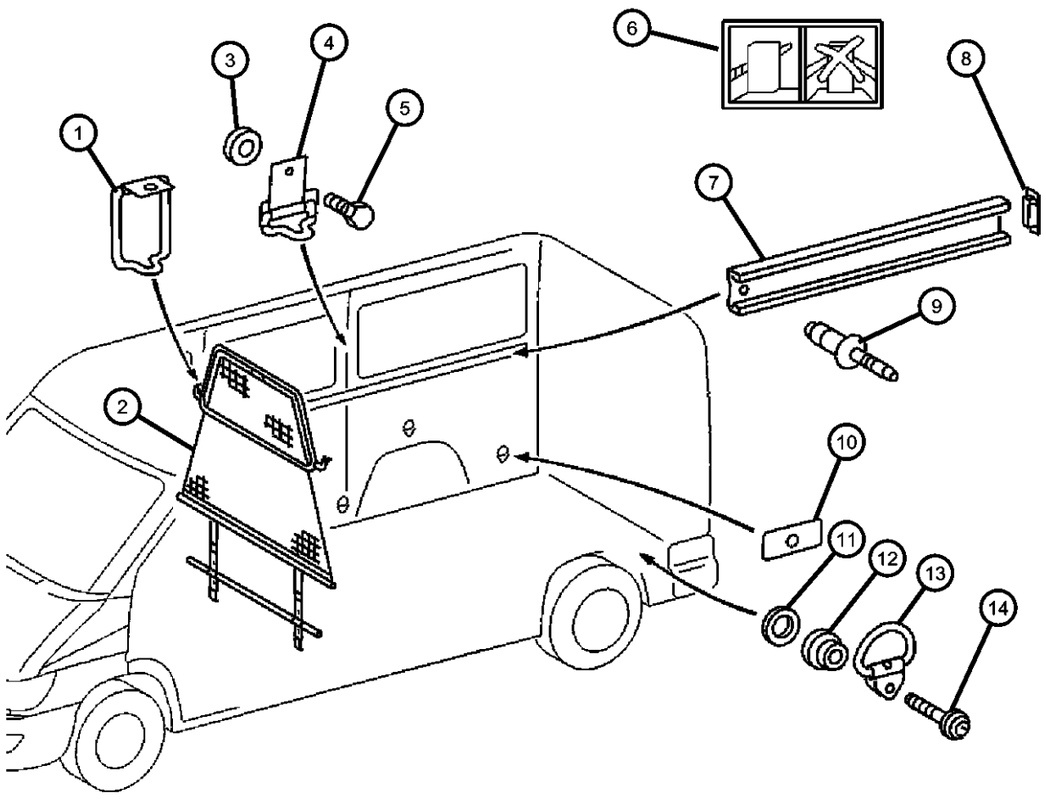

ITEM	PART NUMBER	QTY	LINE	SERIES	BODY	ENGINE	TRANS	TRIM	DESCRIPTION
1		8							BRACKET, (NOT SERVICED)
2		8							GRILLE, Texture, (NOT SERVICED)
3									WASHER, Flat, M8
	05133977AA	1	2, 6	L	11, 12, 14, 15, 16				
		1	2, 6	L	51, 52, 54, 55, 56				
4		1							BRACKET, (NOT SERVICED)
5									BOLT, Hex Head
	05126227AA	6	2, 6	L	51, 52, 54, 55, 56				
		6	2, 6	L	11, 12, 14, 15, 16				
		6	3, 7	L	12, 15, 16				
6	05124356AA	1	3, 7	L	12, 15, 16				LABEL, Cargo Tie Down
7									RAIL
	05121437AA	1	2, 6	L	11, 12, 14, 15				Cargo Retaning
		1	2, 6	L	11, 14, 16				Cargo Retaning
		99	3, 7	L	12, 15, 16				Cargo Retaning
8									END CAP, Side Rail
	05121423AA	4	2, 6	L	11, 12, 14, 15, 16				Right & Left
		4	3, 7	L	12, 15, 16				Right & Left
9									RIVET
	05125821AA	13	2, 6	L	11, 14				
		16	3, 7	L	12, 15				
10									NUT
	05103926AA	4	2, 6	L	11, 12, 14, 15				
		4	2, 6	L	51, 52, 54, 55				
		4	3, 7	L	12, 15				

SPRINTER (VA)

SERIES	LINE	BODY	ENGINE	TRANSMISSION
L = LOWLINE	3 = HD DODGE 2WD 6 = Lt. Duty DODGE 4WD 2 = Med. Duty DODGE 2WD 7 = Med. Duty DODGE 4WD	55 = Wagon 140" 54 = Wagon 118" 52 = Wagon 140" 51 = Wagon 118" 12 = Van 140" 11 = Van 118" 06 = Front Section 158" 14 = Van 118" 15 = Van 140" 16 = Van 158" 56 = Wagon 158" 01 = Chassis Forward Control 118" 02 = Chassis Forward Control 140"	EX8 = Engine-2.7L I5 Mercedes Turbo Diesel	DGJ = Transmission-5-Spd. Automatic,W5A580

Cargo Retainers - With Windows
Figure IVA-240

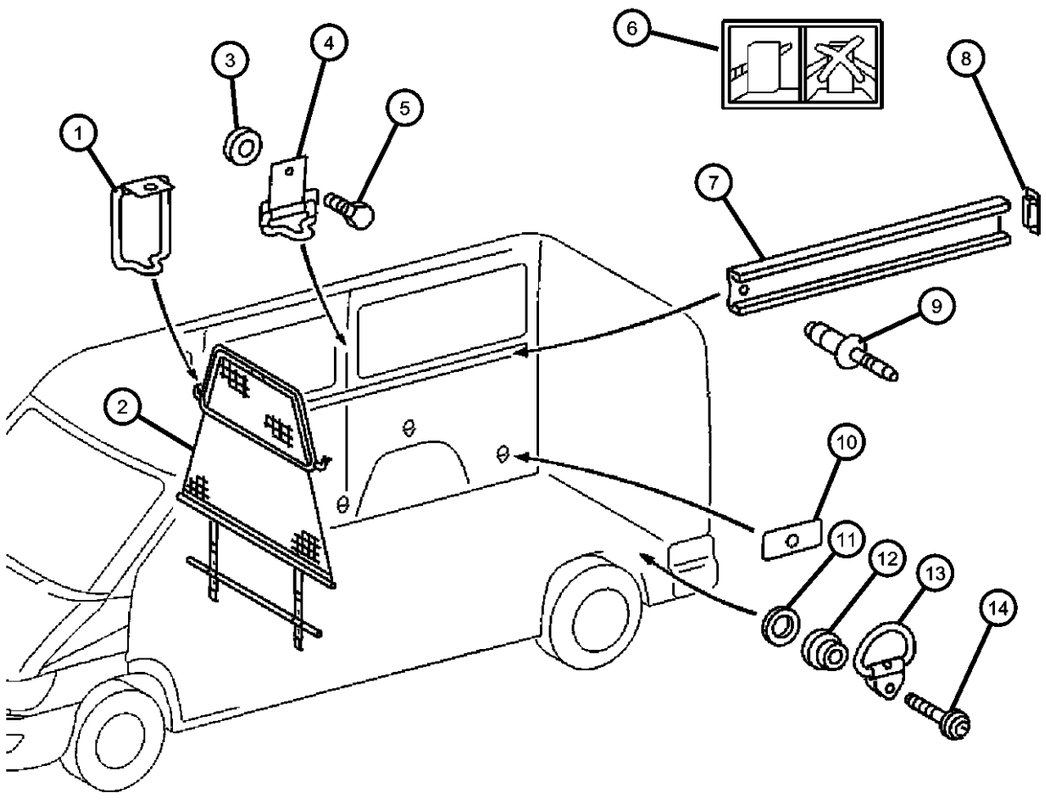

ITEM	PART NUMBER	QTY	LINE	SERIES	BODY	ENGINE	TRANS	TRIM	DESCRIPTION
11									WASHER
	05103726AA	7	2, 6	L	11, 12, 14, 15				
		7	3, 7	L	12, 15				
12									BUSHING
	05104544AA	7	2, 6	L	11, 12, 14, 15				
		7	3, 7	L	12, 15				
13									RING, RING-RETAINER
	05104500AA	8	2, 6	L	51, 52, 54, 55, 56				
		8	3, 7	L	12, 15				
14									BOLT, Hex Head
	05103816AA	8	2, 6	L	11, 12, 14, 15, 16				
		8	2, 6	L	51, 52, 54, 55, 56				
		8	3, 7	L	12, 15				
-15									PARTITION, Cargo
	05104317AA	1	2, 6	L	11, 12, 14, 15, 16				Left
		1	3, 7	L	12, 15, 16				Left
	05104318AA	1	2, 6	L	11, 12, 14, 15, 16				Right
		1	3, 7	L	12, 15, 16				Right

SPRINTER (VA)

SERIES	LINE	BODY	ENGINE	TRANSMISSION
L = LOWLINE	3 = HD DODGE 2WD 6 = Lt. Duty DODGE 4WD 2 = Med. Duty DODGE 2WD 7 = Med. Duty DODGE 4WD	55 = Wagon 140" 54 = Wagon 118" 52 = Wagon 140" 51 = Wagon 118" 12 = Van 140" 11 = Van 118" 06 = Front Section 158" 14 = Van 118" 15 = Van 140" 16 = Van 158" 56 = Wagon 158" 01 = Chassis Forward Control 118" 02 = Chassis Forward Control 140"	EX8 = Engine-2.7L I5 Mercedes Turbo Diesel	DGJ = Transmission-5-Spd. Automatic,W5A580

Rear Pillar Inner Panel
Figure IVA-245

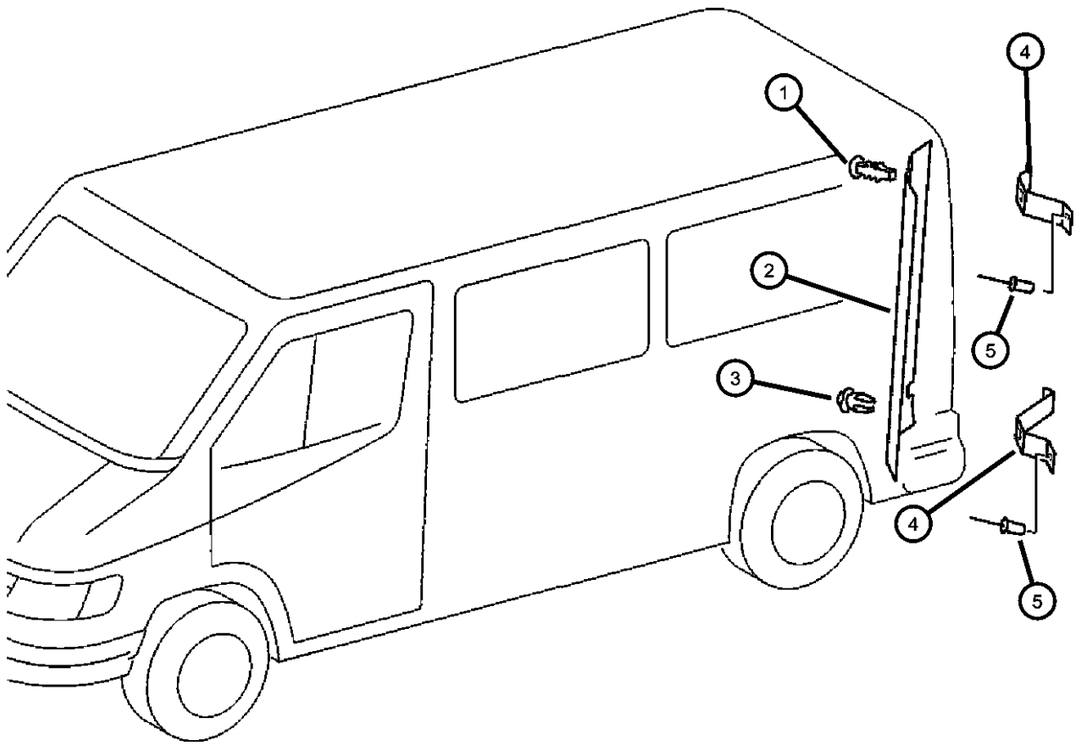

ITEM	PART NUMBER	QTY	LINE	SERIES	BODY	ENGINE	TRANS	TRIM	DESCRIPTION
1									PIN, Push
	05103814AA	3	2, 6	L	11, 12, 14, 15, 16				
		3	2, 6	L	51, 52, 54, 55, 56				
		3	3, 7	L	12, 15, 16				
2									PANEL, D Pillar Trim
	05104291AA	1	2, 6	L	11, 12, 14, 15, 16				With Grab Handles and Without Load Rings, Left
		1	2, 6	L	51, 52, 54, 55, 56				With Grab Handles and Without Load Rings, Left
		1	3, 7	L	12, 15, 16				With Grab Handles and Without Load Rings, Left
	05104292AA	1	2, 6	L	11, 12, 14, 15, 16				With Grab Handles and Without Load Rings, Right
		1	2, 6	L	51, 52, 54, 55, 56				With Grab Handles and Without Load Rings, Right
		1	3, 7	L	12, 15, 16				With Grab Handles and Without Load Rings, Right
	05123318AA	1	2, 6	L	11, 12, 14, 15, 16				Without Grab Handles and Load Rings, Left, Rear
		1	2, 6	L	51, 52, 54, 55, 56				Without Grab Handles and Load Rings, Left, Rear
		1	3, 7	L	12, 15, 16				Without Grab Handles and Load Rings, Left, Rear
	05123320AA	1	2, 6	L	11, 12, 14, 15, 16				Without Grab Handles and Load Rings, Right, Rear
		1	2, 6	L	51, 52, 54, 55, 56				Without Grab Handles and Load Rings, Right, Rear
		1	3, 7	L	12, 15, 16				Without Grab Handles and Load Rings, Right, Rear
	05123324AA	1	2, 6	L	11, 12, 14, 15, 16				With Load Rings Without Grab Handles, Left
		1	2, 6	L	51, 52, 54, 55, 56				With Load Rings Without Grab Handles, Left
		1	3, 7	L	12, 15, 16				With Load Rings Without Grab Handles, Left
	05123326AA	1	2, 6	L	11, 12, 14, 15, 16				With Load Rings Without Grab Handles, Right

SPRINTER (VA)

SERIES	LINE	BODY	ENGINE	TRANSMISSION
L = LOWLINE	3 = HD DODGE 2WD 6 = Lt. Duty DODGE 4WD 2 = Med. Duty DODGE 2WD 7 = Med. Duty DODGE 4WD	55 = Wagon 140" 54 = Wagon 118" 52 = Wagon 140" 51 = Wagon 118" 12 = Van 140" 11 = Van 118" 06 = Front Section 158" 14 = Van 118" 15 = Van 140" 16 = Van 158" 56 = Wagon 158" 01 = Chassis Forward Control 118" 02 = Chassis Forward Control 140"	EX8 = Engine-2.7L I5 Mercedes Turbo Diesel	DGJ = Transmission-5-Spd. Automatic,W5A580

Rear Pillar Inner Panel
Figure IVA-245

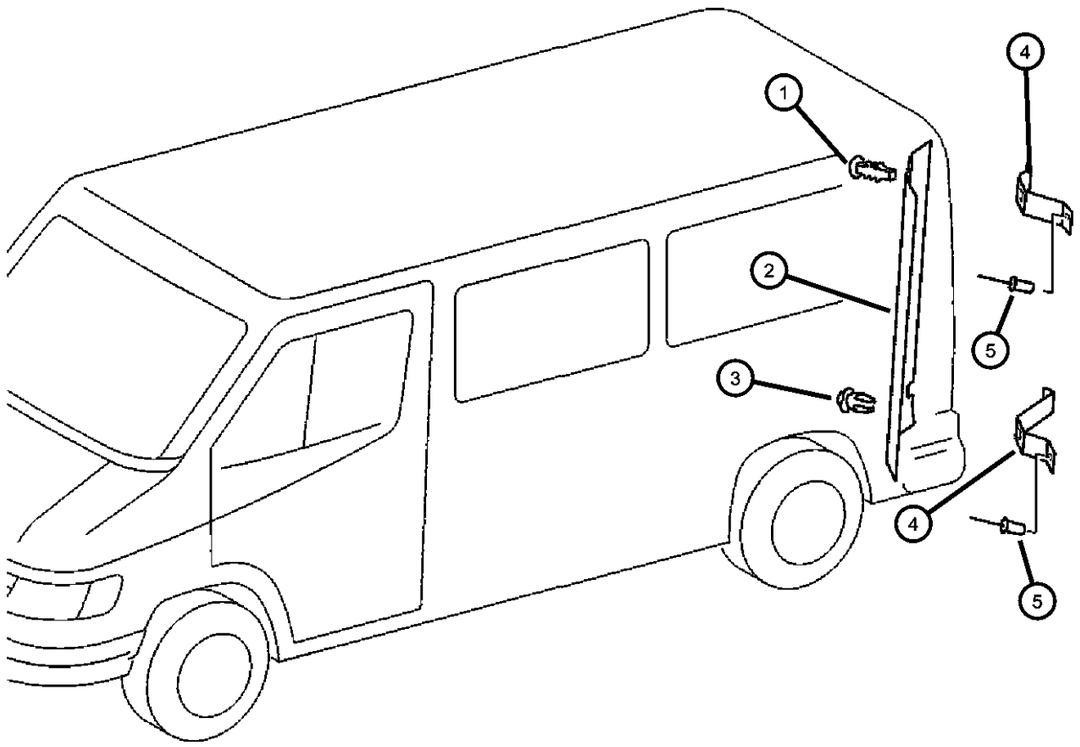

ITEM	PART NUMBER	QTY	LINE	SERIES	BODY	ENGINE	TRANS	TRIM	DESCRIPTION
		1	2, 6	L	51, 52, 54, 55, 56				With Load Rings Without Grab Handles, Right
		1	3, 7	L	12, 15, 16				With Load Rings Without Grab Handles, Right
	05123328AA	1	2, 6	L	11, 12, 14, 15, 16				With Grab Handles and Load Rings, Left
		1	2, 6	L	51, 52, 54, 55, 56				With Grab Handles and Load Rings, Left
		1	3, 7	L	12, 15, 16				With Grab Handles and Load Rings, Left
	05123330AA	1	2, 6	L	11, 12, 14, 15, 16				With Grab Handles and Load Rings, Right
		1	2, 6	L	51, 52, 54, 55, 56				With Grab Handles and Load Rings, Right
		1	3, 7	L	12, 15, 16				With Grab Handles and Load Rings, Right
3									PIN, Push
	05103785AA	3	2, 6	L	11, 12, 14, 15, 16				
		3	2, 6	L	51, 52, 54, 55, 56				
		3	3, 7	L	12, 15, 16				
4									BRACKET, Trim Panel
	05104280AA	2	2, 6	L	11, 12, 14, 15, 16				Left, D Pillar, Upper
		2	2, 6	L	51, 52, 54, 55, 56				Left, D Pillar, Upper
		2	3, 7	L	12, 15, 16				Left, D Pillar, Upper
	05104281AA	1	2, 6	L	11, 12, 14, 15, 16				Right, D Pillar, Upper
		1	2, 6	L	51, 52, 54, 55, 56				Right, D Pillar, Upper
		1	3, 7	L	12, 15, 16				Right, D Pillar, Upper
5									RIVET
	05104624AA	6	2, 6	L	11, 12, 14, 15, 16				

SPRINTER (VA)

SERIES	LINE	BODY	ENGINE	TRANSMISSION
L = LOWLINE	3 = HD DODGE 2WD 6 = Lt. Duty DODGE 4WD 2 = Med. Duty DODGE 2WD 7 = Med. Duty DODGE 4WD	55 = Wagon 140" 54 = Wagon 118" 52 = Wagon 140" 51 = Wagon 118" 12 = Van 140" 11 = Van 118" 06 = Front Section 158" 14 = Van 118" 15 = Van 140" 16 = Van 158" 56 = Wagon 158" 01 = Chassis Forward Control 118" 02 = Chassis Forward Control 140"	EX8 = Engine-2.7L I5 Mercedes Turbo Diesel	DGJ = Transmission-5-Spd. Automatic,W5A580

Rear Pillar Inner Panel
Figure IVA-245

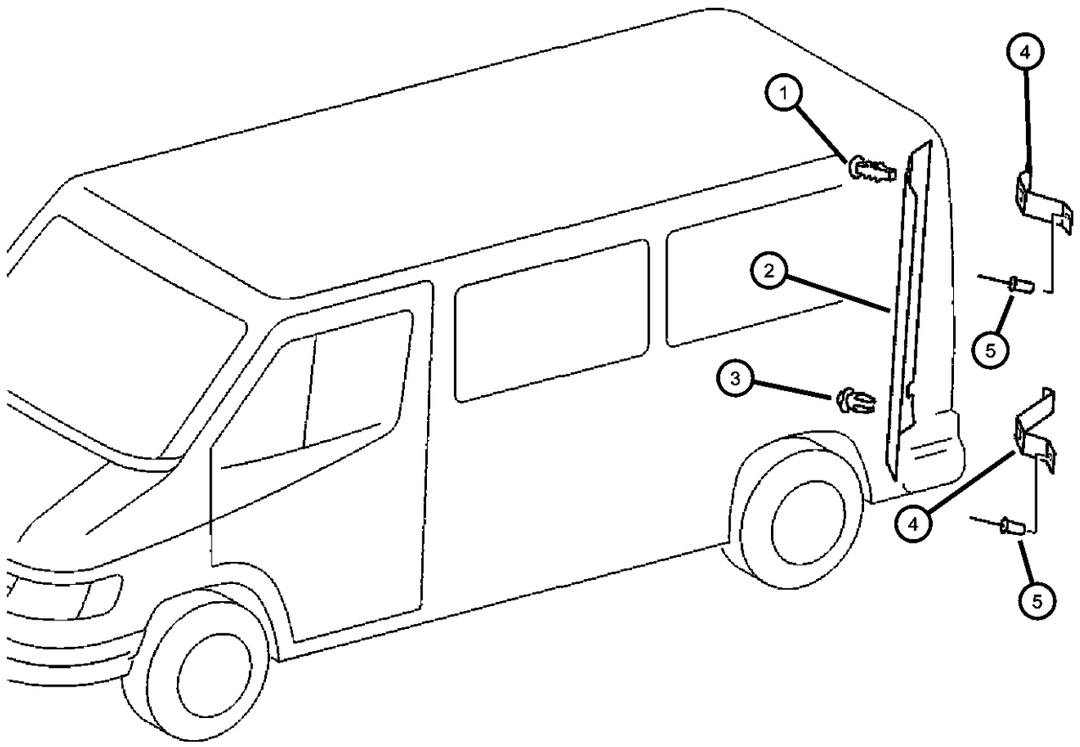

ITEM	PART NUMBER	QTY	LINE	SERIES	BODY	ENGINE	TRANS	TRIM	DESCRIPTION
		6	2, 6	L	51, 52, 54, 55, 56				
		6	3, 7	L	12, 15, 16				

SPRINTER (VA)

SERIES	LINE	BODY	ENGINE	TRANSMISSION
L = LOWLINE	3 = HD DODGE 2WD 6 = Lt. Duty DODGE 4WD 2 = Med. Duty DODGE 2WD 7 = Med. Duty DODGE 4WD	55 = Wagon 140" 54 = Wagon 118" 52 = Wagon 140" 51 = Wagon 118" 12 = Van 140" 11 = Van 118" 06 = Front Section 158" 14 = Van 118" 15 = Van 140" 16 = Van 158" 56 = Wagon 158" 01 = Chassis Forward Control 118" 02 = Chassis Forward Control 140"	EX8 = Engine-2.7L I5 Mercedes Turbo Diesel	DGJ = Transmission-5-Spd. Automatic,W5A580

AR = use ase required - = Non illustrrated part

Cowl Panel - Silencer
Figure IVA-250

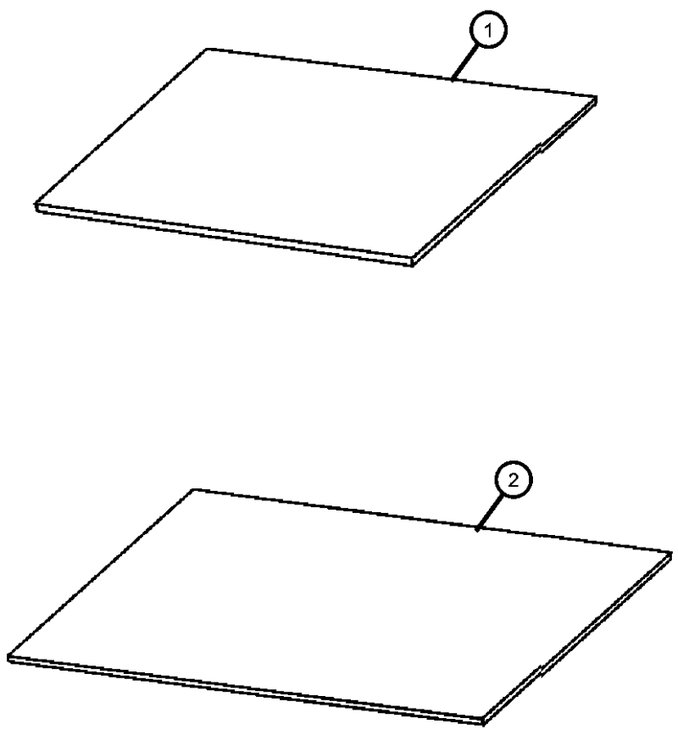

ITEM	PART NUMBER	QTY	LINE	SERIES	BODY	ENGINE	TRANS	TRIM	DESCRIPTION
1									SILENCER, Cowl Side
	05133640AA	1	3, 7	L	12, 15, 16				Window Sill, Left, Front
	05133641AA	1	3, 7	L	12, 15, 16				Window Sill, Right, Front
2									SILENCER, Cowl Side
	05133642AA	1	3, 7	L	12, 15, 16				Window Sill, Left, Rear
	05133643AA	1	3, 7	L	12, 15, 16				Window Sill, Right, Rear

SPRINTER (VA)

SERIES	LINE	BODY	ENGINE	TRANSMISSION
L = LOWLINE	3 = HD DODGE 2WD 6 = Lt. Duty DODGE 4WD 2 = Med. Duty DODGE 2WD 7 = Med. Duty DODGE 4WD	55 = Wagon 140" 54 = Wagon 118" 52 = Wagon 140" 51 = Wagon 118" 12 = Van 140" 11 = Van 118" 06 = Front Section 158" 14 = Van 118" 15 = Van 140" 16 = Van 158" 56 = Wagon 158" 01 = Chassis Forward Control 118" 02 = Chassis Forward Control 140"	EX8 = Engine-2.7L I5 Mercedes Turbo Diesel	DGJ = Transmission-5-Spd. Automatic,W5A580

AR = use ase required - = Non illustrrated part

Partition Panel
Figure IVA-255

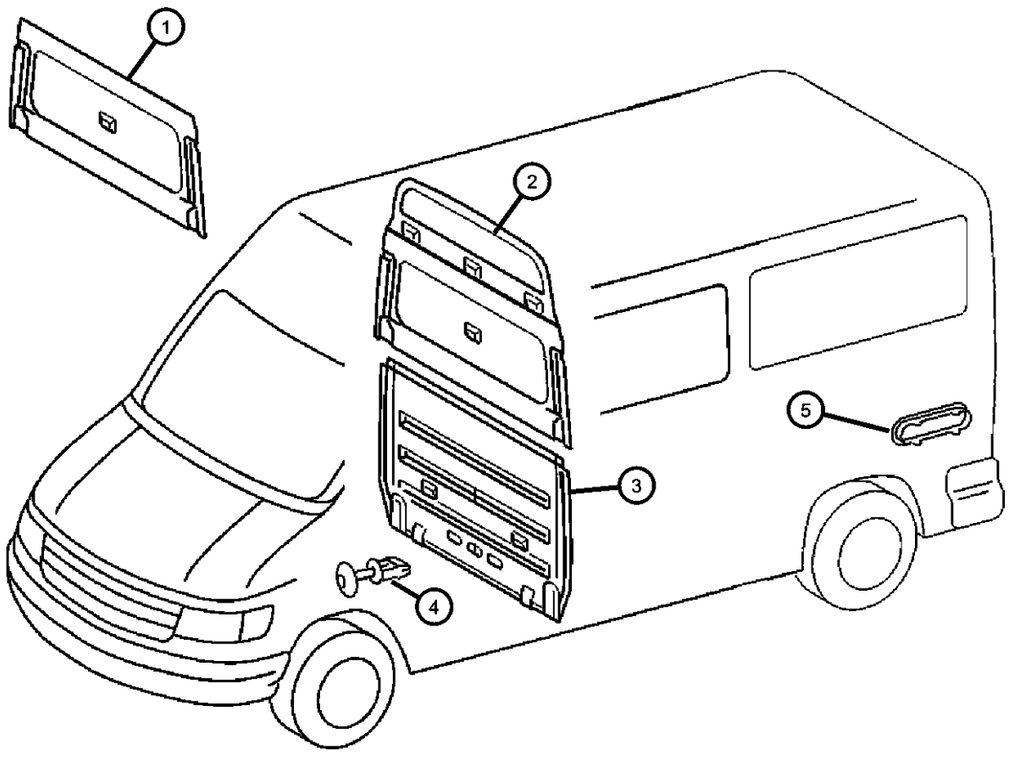

ITEM	PART NUMBER	QTY	LINE	SERIES	BODY	ENGINE	TRANS	TRIM	DESCRIPTION
1									PANEL, Quarter
	05122967AA	1	2, 6	L	11, 12, 14, 15, 16				Without Window
		1	3, 7	L	12, 15, 16				Without Window
	05122969AA	1	2, 6	L	11, 12, 14, 15, 16				With Window
		1	3, 7	L	12, 15, 16				With Window
2									PANEL, Quarter
	05122971AA	1	2, 6	L	11, 12, 14, 15, 16				
		1	3, 7	L	12, 15, 16				
3									PANEL, Quarter
	05122962AA	1	2, 6	L	11, 12, 14, 15, 16				
		1	3, 7	L	12, 15, 16				
4									RIVET
	05125808AA	7	2, 6	L	11, 12, 14, 15, 16				
		7	3, 7	L	12, 15, 16				
5									EXHAUSTER, Quarter Panel
	05123426AA	2	2, 6	L	01, 02, 06				
		2	2, 6	L	11, 12, 14, 15, 16				
		2	2, 6	L	51, 52, 54, 55, 56				
		2	3, 7	L	12, 15, 16				

SPRINTER (VA)

SERIES	LINE	BODY	ENGINE	TRANSMISSION
L = LOWLINE	3 = HD DODGE 2WD 6 = Lt. Duty DODGE 4WD 2 = Med. Duty DODGE 2WD 7 = Med. Duty DODGE 4WD	55 = Wagon 140" 54 = Wagon 118" 52 = Wagon 140" 51 = Wagon 118" 12 = Van 140" 11 = Van 118" 06 = Front Section 158" 14 = Van 118" 15 = Van 140" 16 = Van 158" 56 = Wagon 158" 01 = Chassis Forward Control 118" 02 = Chassis Forward Control 140"	EX8 = Engine-2.7L I5 Mercedes Turbo Diesel	DGJ = Transmission-5-Spd. Automatic,W5A580

Partition Wall and Sliding Door
Figure IVA-260

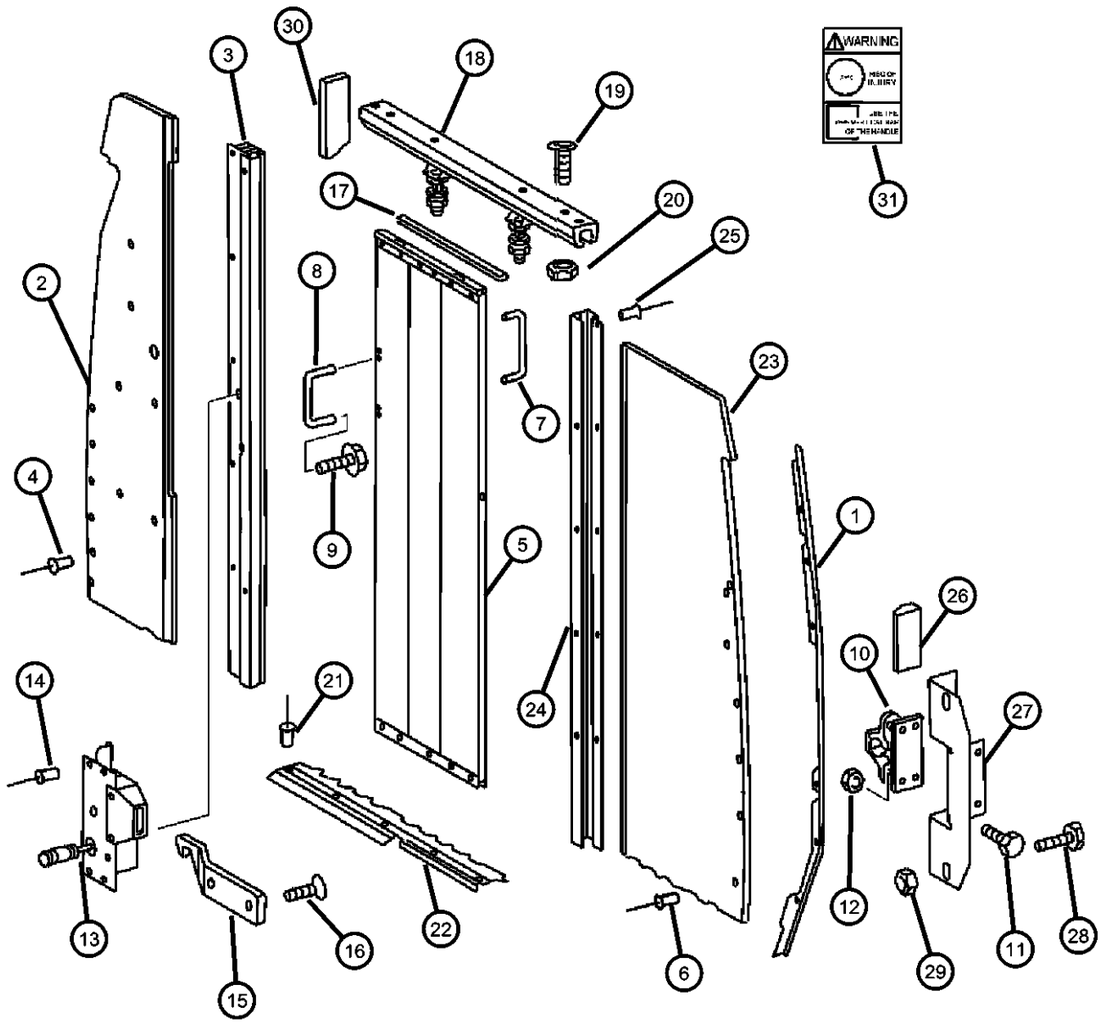

ITEM	PART NUMBER	QTY	LINE	SERIES	BODY	ENGINE	TRANS	TRIM	DESCRIPTION
1									PANEL EXTENSION, Extension, W/O Slide
	05104315AA	1	2, 6	L	11, 12, 14, 15, 16				
		1	3, 7	L	12, 15, 16				
2									PARTITION, Cargo
	05104318AA	1	2, 6	L	11, 12, 14, 15, 16				
		1	3, 7	L	12, 15, 16				
3									RAIL, Cargo Partition, Sliding Door
	05104306AA	1	2, 6	L	11, 12, 14, 15, 16				
		1	3, 7	L	12, 15, 16				
4									RIVET, Blind Bulb
	05125811AA	7	2, 6	L	11, 12, 14, 15, 16				
		7	3, 7	L	12, 15, 16				
5									PANEL, Cargo Compartment, Without Windows
	05123575AA	1	2, 6	L	11, 12, 14, 15, 16				
		1	3, 7	L	12, 15, 16				
6									RIVET, Blind
	05126108AA	5	2, 6	L	11, 12, 14, 15, 16				
		5	3, 7	L	12, 15, 16				
	05126109AA	25	2, 6	L	11, 12, 14, 15, 16				
		25	3, 7	L	12, 15, 16				
7									HANDLE, Cargo Door Interior
	05123662AA	1	2, 6	L	11, 12, 14, 15, 16				
		1	3, 7	L	12, 15, 16				
8									HANDLE, Cargo Door Interior

SPRINTER (VA)

SERIES	LINE	BODY	ENGINE	TRANSMISSION
L = LOWLINE	3 = HD DODGE 2WD 6 = Lt. Duty DODGE 4WD 2 = Med. Duty DODGE 2WD 7 = Med. Duty DODGE 4WD	55 = Wagon 140" 54 = Wagon 118" 52 = Wagon 140" 51 = Wagon 118" 12 = Van 140" 11 = Van 118" 06 = Front Section 158" 14 = Van 118" 15 = Van 140" 16 = Van 158" 56 = Wagon 158" 01 = Chassis Forward Control 118" 02 = Chassis Forward Control 140"	EX8 = Engine-2.7L I5 Mercedes Turbo Diesel	DGJ = Transmission-5-Spd. Automatic,W5A580

Partition Wall and Sliding Door
Figure IVA-260

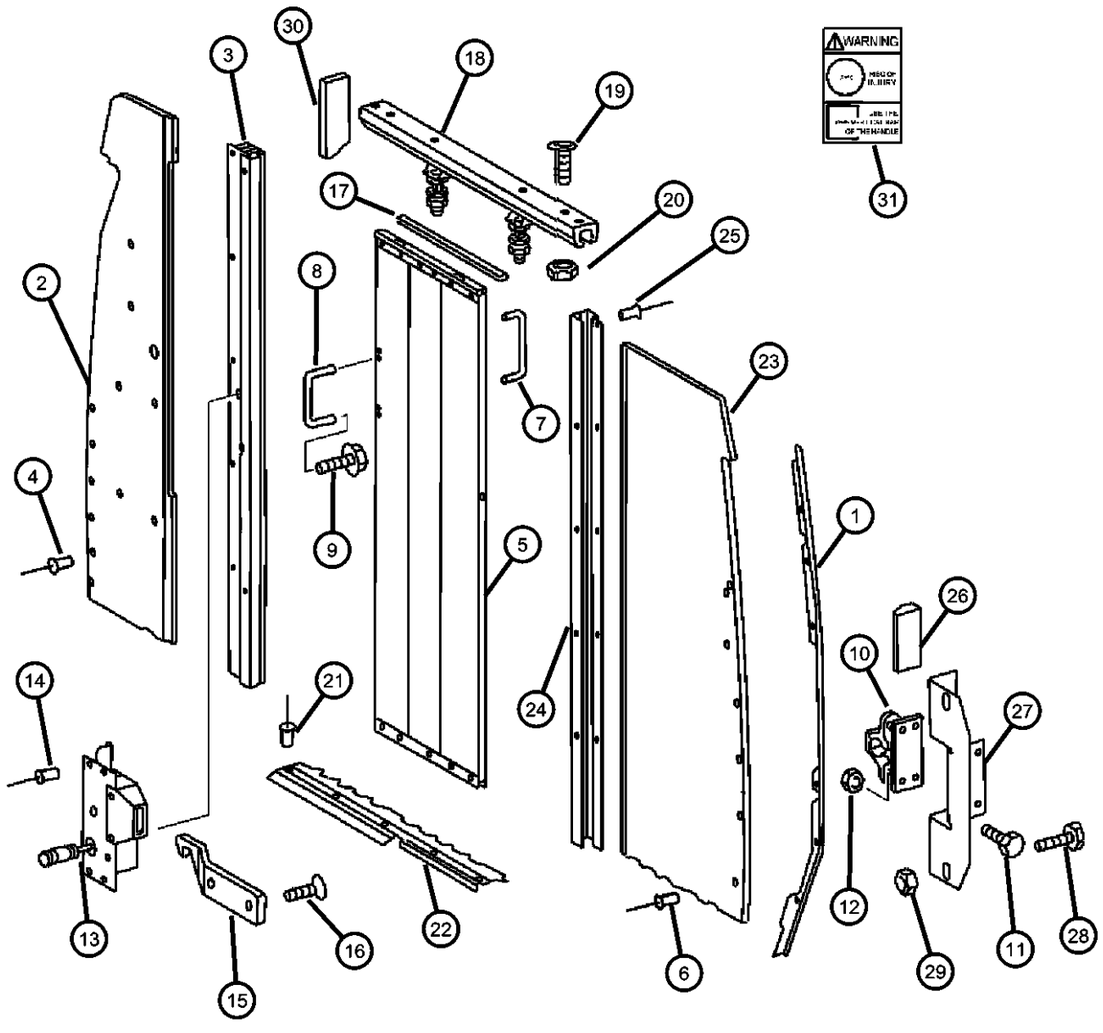

ITEM	PART NUMBER	QTY	LINE	SERIES	BODY	ENGINE	TRANS	TRIM	DESCRIPTION
	05123663AA	1	2, 6	L	11, 12, 14, 15, 16				
		1	3, 7	L	12, 15, 16				
9									SCREW
	06104119AA	4	3, 7	L	12, 15, 16				
		4	2, 6	L	11, 12, 14, 15, 16				
10									ADJUSTER, Cargo Door
	05104419AA	1	2, 6	L	11, 12, 14, 15, 16				
		1	3, 7	L	12, 15, 16				
11									SCREW
	05104652AA	4	2, 6	L	11, 12, 14, 15, 16				
		4	3, 7	L	12, 15, 16				
12									NUT
	05104660AA	4	2, 6	L	11, 12, 14, 15, 16				
		4	3, 7	L	12, 15, 16				
13									LATCH
	05104303AA	1	2, 6	L	11, 12, 14, 15, 16				
		1	3, 7	L	12, 15, 16				
14									RIVET
	05104623AA	4	2, 6	L	11, 12, 14, 15, 16				
		4	3, 7	L	12, 15, 16				
15									CATCH, Sliding Partition Door
	05104424AA	1	2, 6	L	11, 12, 14, 15, 16				
		1	3, 7	L	12, 15, 16				
16									SCREW, Hex Flange Head

SPRINTER (VA)

SERIES	LINE	BODY	ENGINE	TRANSMISSION
L = LOWLINE	3 = HD DODGE 2WD 6 = Lt. Duty DODGE 4WD 2 = Med. Duty DODGE 2WD 7 = Med. Duty DODGE 4WD	55 = Wagon 140" 54 = Wagon 118" 52 = Wagon 140" 51 = Wagon 118" 12 = Van 140" 11 = Van 118" 06 = Front Section 158" 14 = Van 118" 15 = Van 140" 16 = Van 158" 56 = Wagon 158" 01 = Chassis Forward Control 118" 02 = Chassis Forward Control 140"	EX8 = Engine-2.7L I5 Mercedes Turbo Diesel	DGJ = Transmission-5-Spd. Automatic,W5A580

Partition Wall and Sliding Door
Figure IVA-260

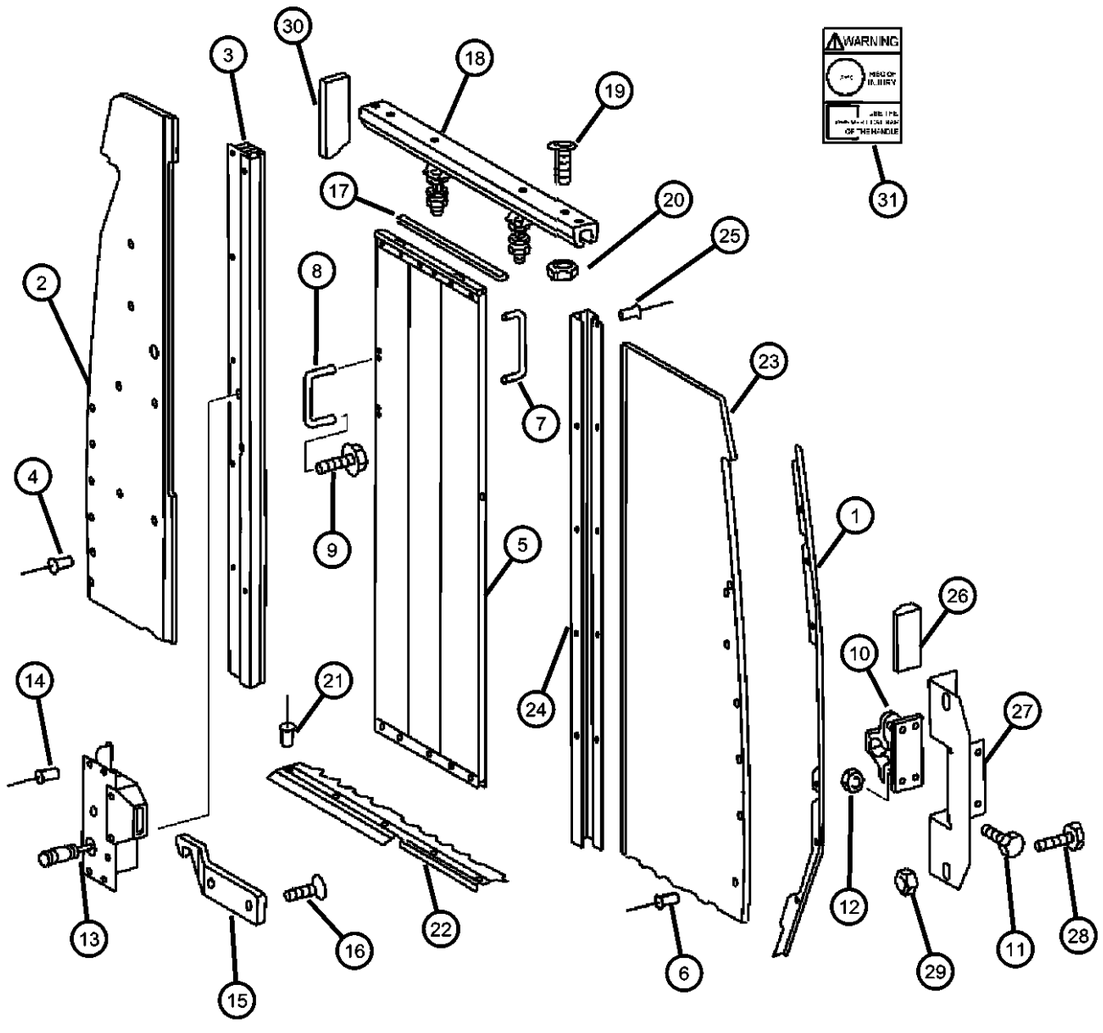

ITEM	PART NUMBER	QTY	LINE	SERIES	BODY	ENGINE	TRANS	TRIM	DESCRIPTION
	06104121AA	4	2, 6	L	11, 12, 14, 15, 16				
		4	3, 7	L	12, 15, 16				
17									GUARD, Door Edge
	05103782AA	1	2, 6	L	11, 12, 14, 15, 16				3 Meters Long
		1	3, 7	L	12, 15, 16				3 Meters Long
18									RAIL, Cargo Partition, Sliding Door
	05123585AA	1	3, 7	L	12, 15, 16				
		1	2, 6	L	11, 12, 14, 15, 16				
19									SCREW, Hex Head
	05126110AA	1	2, 6	L	11, 12, 14, 15, 16				
		1	3, 7	L	12, 15, 16				
20									NUT
	06104714AA	5	2, 6	L	11, 12, 14, 15, 16				
		5	3, 7	L	12, 15, 16				
21									RIVET
	05104623AA	5	2, 6	L	11, 12, 14, 15, 16				
		5	3, 7	L	12, 15, 16				
22									MOLDING, Cargo Area Carpet
	05104156AA	1	2, 6	L	11, 12, 14, 15, 16				
		1	3, 7	L	12, 15, 16				
23									PARTITION, Cargo
	05104317AA	1	2, 6	L	11, 12, 14, 15, 16				Left
		1	3, 7	L	12, 15, 16				Left
24									RAIL, Cargo Partition, Sliding Door

SPRINTER (VA)

SERIES	LINE	BODY	ENGINE	TRANSMISSION
L = LOWLINE	3 = HD DODGE 2WD 6 = Lt. Duty DODGE 4WD 2 = Med. Duty DODGE 2WD 7 = Med. Duty DODGE 4WD	55 = Wagon 140" 54 = Wagon 118" 52 = Wagon 140" 51 = Wagon 118" 12 = Van 140" 11 = Van 118" 06 = Front Section 158" 14 = Van 118" 15 = Van 140" 16 = Van 158" 56 = Wagon 158" 01 = Chassis Forward Control 118" 02 = Chassis Forward Control 140"	EX8 = Engine-2.7L I5 Mercedes Turbo Diesel	DGJ = Transmission-5-Spd. Automatic,W5A580

Partition Wall and Sliding Door
Figure IVA-260

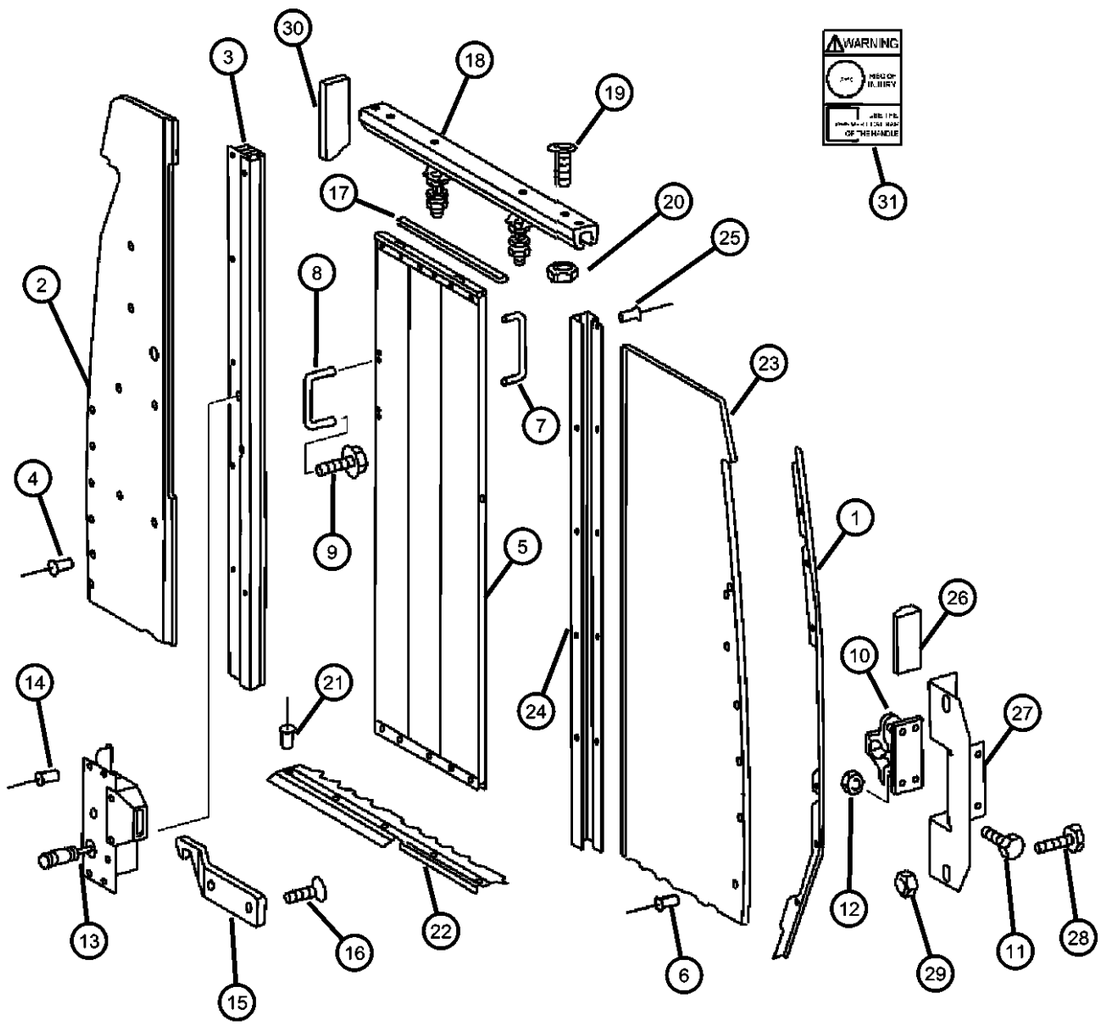

ITEM	PART NUMBER	QTY	LINE	SERIES	BODY	ENGINE	TRANS	TRIM	DESCRIPTION
	05104309AA	1	2, 6	L	11, 12, 14, 15, 16				
		1	3, 7	L	12, 15, 16				
25									RIVET
	05125812AA	9	2, 6	L	11, 12, 14, 15, 16				
		9	3, 7	L	12, 15, 16				
26									BUMPER, Rubber
	05104427AA	2	2, 6	L	11, 12, 14, 15, 16				
		2	3, 7	L	12, 15, 16				
27									HOUSING
	05104305AA	1	2, 6	L	11, 12, 14, 15, 16				
		1	3, 7	L	12, 15, 16				
28									BOLT, Hex Head
	05126132AA	2	2, 6	L	11, 12, 14, 15, 16				
		2	3, 7	L	12, 15, 16				
29									NUT
	06104716AA	2	2, 6	L	11, 12, 14, 15, 16				
		2	3, 7	L	12, 15, 16				
30									SEAL
	05123661AA	1	2, 6	L	11, 12, 14, 15, 16				
		1	3, 7	L	12, 15, 16				
31									LABEL, Warning
	05121162AA	1	2, 6	L	11, 12, 14, 15, 16				
		1	3, 7	L	12, 15, 16				
-32									LABEL, Gummed Label on Door

SPRINTER (VA)

SERIES	LINE	BODY	ENGINE	TRANSMISSION
L = LOWLINE	3 = HD DODGE 2WD 6 = Lt. Duty DODGE 4WD 2 = Med. Duty DODGE 2WD 7 = Med. Duty DODGE 4WD	55 = Wagon 140" 54 = Wagon 118" 52 = Wagon 140" 51 = Wagon 118" 12 = Van 140" 11 = Van 118" 06 = Front Section 158" 14 = Van 118" 15 = Van 140" 16 = Van 158" 56 = Wagon 158" 01 = Chassis Forward Control 118" 02 = Chassis Forward Control 140"	EX8 = Engine-2.7L I5 Mercedes Turbo Diesel	DGJ = Transmission-5-Spd. Automatic,W5A580

Partition Wall and Sliding Door
Figure IVA-260

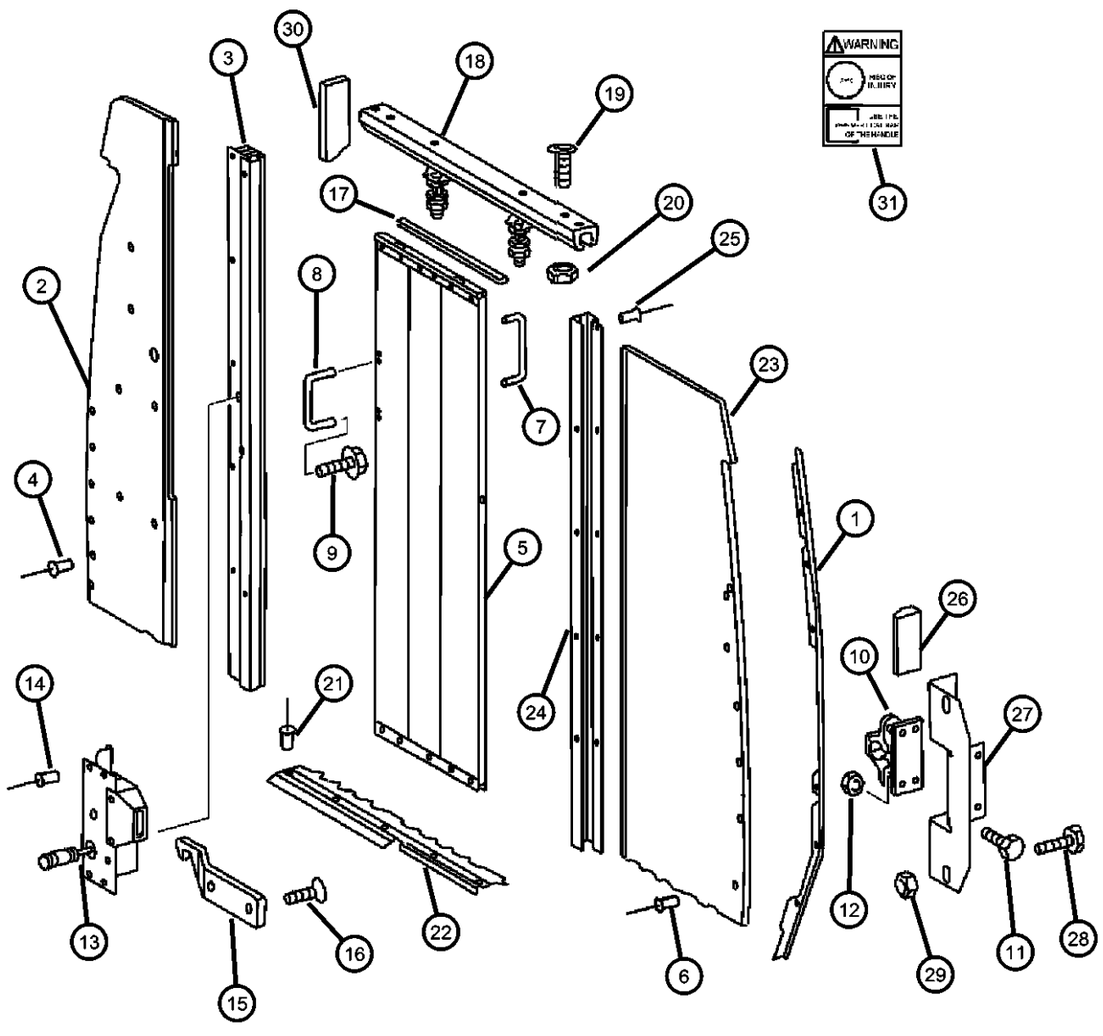

ITEM	PART NUMBER	QTY	LINE	SERIES	BODY	ENGINE	TRANS	TRIM	DESCRIPTION
	05121146AA	1	2, 6	L	11, 12, 14, 15, 16				
		1	3, 7	L	12, 15, 16				
-33									BOLT, Door to Guide
	05125721AA	2	2, 6	L	11, 12, 14, 15, 16				
		2	3, 7	L	12, 15, 16				
-34									NUT, Door to Guide
	05126126AA	4	2, 6	L	11, 12, 14, 15, 16				
		4	3, 7	L	12, 15, 16				
-35									NUT, Hex, Door to Guide
	05126208AA	4	2, 6	L	11, 12, 14, 15, 16				
		4	3, 7	L	12, 15, 16				

SPRINTER (VA)

SERIES	LINE	BODY	ENGINE	TRANSMISSION
L = LOWLINE	3 = HD DODGE 2WD 6 = Lt. Duty DODGE 4WD 2 = Med. Duty DODGE 2WD 7 = Med. Duty DODGE 4WD	55 = Wagon 140" 54 = Wagon 118" 52 = Wagon 140" 51 = Wagon 118" 12 = Van 140" 11 = Van 118" 06 = Front Section 158" 14 = Van 118" 15 = Van 140" 16 = Van 158" 56 = Wagon 158" 01 = Chassis Forward Control 118" 02 = Chassis Forward Control 140"	EX8 = Engine-2.7L I5 Mercedes Turbo Diesel	DGJ = Transmission-5-Spd. Automatic,W5A580

Carpet - Floor
Figure IVA-310

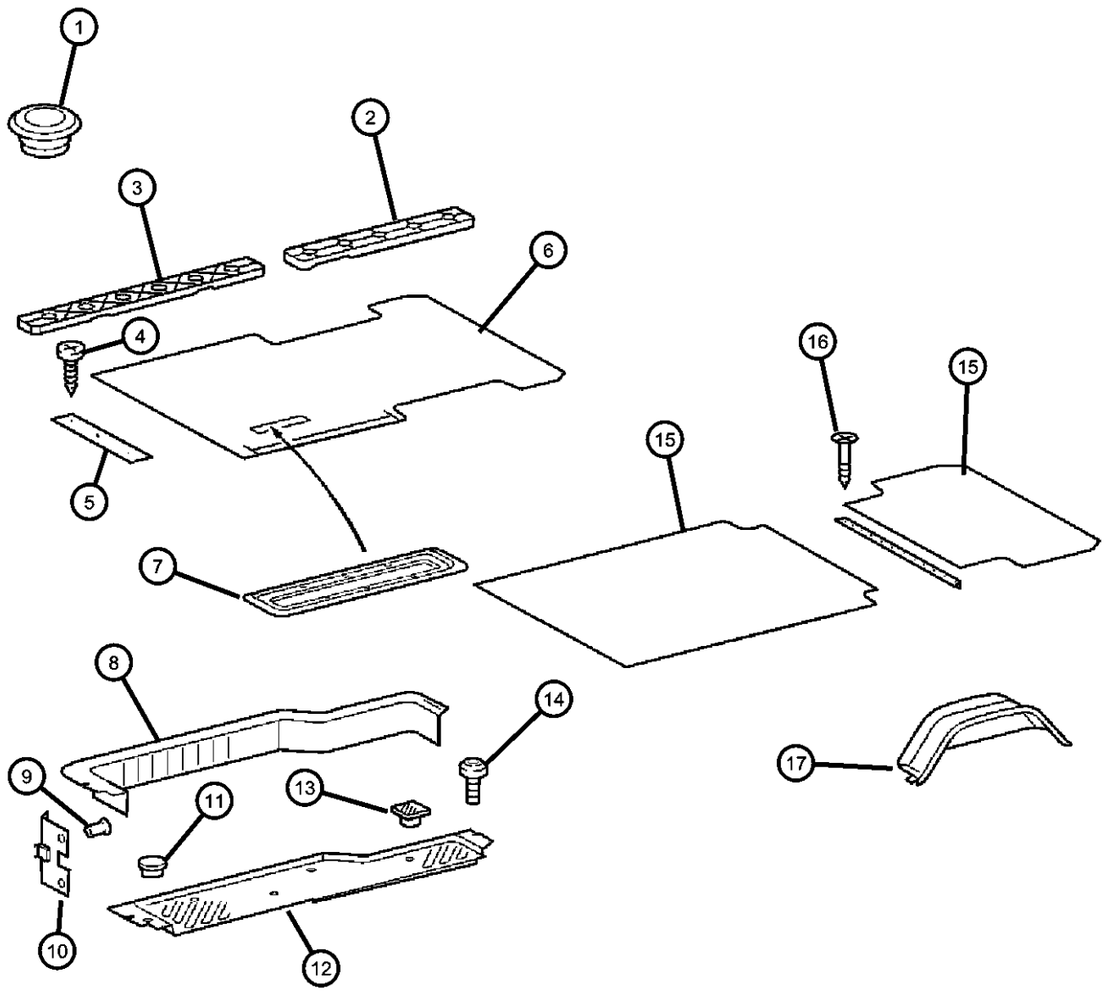

ITEM	PART NUMBER	QTY	LINE	SERIES	BODY	ENGINE	TRANS	TRIM	DESCRIPTION
1									PLUG
	05125991AA	99	2, 6	L	51, 52, 54, 55, 56				
		2	3, 7	L	12, 15, 16				
2									COVER, Seat Track
	05122642AA	1	3, 7	L	12, 15, 16				Rear
		1	2, 6	L	11, 12, 14, 15, 16				Rear
		1	2, 6	L	51, 52, 54, 55, 56				Rear
3									COVER, Seat Track
	05122650AA	2	2, 6	L	11, 12, 14, 15, 16				Front
		1	2, 6	L	51, 52, 54, 55, 56				Front
		1	3, 7	L	12, 15, 16				Front
4		1							SCREW, (NOT SERVICED)
5									PLATE
	05122835AA	1	2, 6	L	11, 12, 14, 15, 16				Carpet Ledge, Sliding Door, Right
		1	2, 6	L	51, 52, 54, 55, 56				Carpet Ledge, Sliding Door, Right
		1	3, 7	L	12, 15, 16				Carpet Ledge, Sliding Door, Right
6		1							LINING, NONE, SPRINTER, (NOT SERVICED),
7		1							COVERING, NONE, SPRINTER, (NOT SERVICED)
8									PANEL, Sliding Door Trim
	05122827AA	1	2, 6	L	11, 12, 14, 15, 16				
		1	2, 6	L	51, 52, 54, 55, 56				
		1	3, 7	L	12, 15, 16				
9									RIVET

SPRINTER (VA)

SERIES	LINE	BODY	ENGINE	TRANSMISSION
L = LOWLINE	3 = HD DODGE 2WD 6 = Lt. Duty DODGE 4WD 2 = Med. Duty DODGE 2WD 7 = Med. Duty DODGE 4WD	55 = Wagon 140" 54 = Wagon 118" 52 = Wagon 140" 51 = Wagon 118" 12 = Van 140" 11 = Van 118" 06 = Front Section 158" 14 = Van 118" 15 = Van 140" 16 = Van 158" 56 = Wagon 158" 01 = Chassis Forward Control 118" 02 = Chassis Forward Control 140"	EX8 = Engine-2.7L I5 Mercedes Turbo Diesel	DGJ = Transmission-5-Spd. Automatic,W5A580

Carpet - Floor
Figure IVA-310

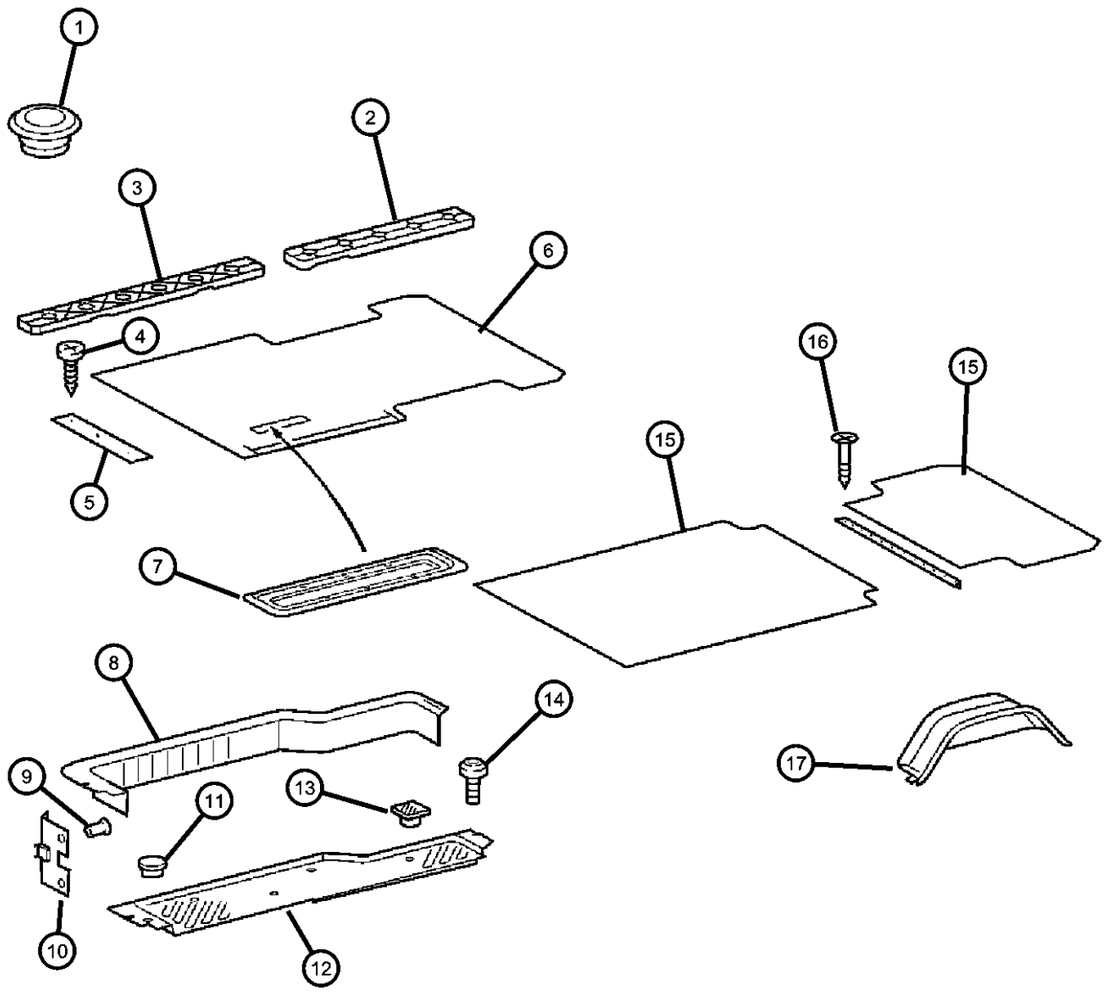

ITEM	PART NUMBER	QTY	LINE	SERIES	BODY	ENGINE	TRANS	TRIM	DESCRIPTION
	05134061AA	8	2, 6	L	11, 12, 14, 15, 16				
		8	2, 6	L	51, 52, 54, 55, 56				
		8	3, 7	L	12, 15, 16				
10									CLIP, Floor Trim
	05125584AA	8	2, 6	L	56, 51, 52, 54, 55				
		8	2, 6	L	11, 12, 14, 15, 16				
		8	3, 7	L	12, 15, 16				
11									PLUG
	05122808AA	1	2, 6	L	11, 12, 14, 15, 16				
		1	2, 6	L	51, 52, 54, 55, 56				
		1	3, 7	L	12, 15, 16				
12									PAD, Side Cargo Door Sill
	05122815AA	1	2, 6	L	11, 12, 14, 15, 16				Entrance, Sliding Door, Left
		1	2, 6	L	51, 52, 54, 55, 56				Entrance, Sliding Door, Left
		1	3, 7	L	12, 15, 16				Entrance, Sliding Door, Left
	05122816AA	1	2, 6	L	11, 12, 14, 15, 16				Entrance, Sliding Door, Right
		1	2, 6	L	54, 55, 56, 51, 52				Entrance, Sliding Door, Right
		1	3, 7	L	12, 15, 16				Entrance, Sliding Door, Right
13									PLUG
	05122811AA	4	2, 6	L	51, 52, 54, 55, 56				
		4	3, 7	L	12, 15, 16				
		4	2, 6	L	11, 12, 14, 15, 16				
14									SCREW

SPRINTER (VA)

SERIES	LINE	BODY	ENGINE	TRANSMISSION
L = LOWLINE	3 = HD DODGE 2WD 6 = Lt. Duty DODGE 4WD 2 = Med. Duty DODGE 2WD 7 = Med. Duty DODGE 4WD	55 = Wagon 140" 54 = Wagon 118" 52 = Wagon 140" 51 = Wagon 118" 12 = Van 140" 11 = Van 118" 06 = Front Section 158" 14 = Van 118" 15 = Van 140" 16 = Van 158" 56 = Wagon 158" 01 = Chassis Forward Control 118" 02 = Chassis Forward Control 140"	EX8 = Engine-2.7L I5 Mercedes Turbo Diesel	DGJ = Transmission-5-Spd. Automatic,W5A580

Carpet - Floor
Figure IVA-310

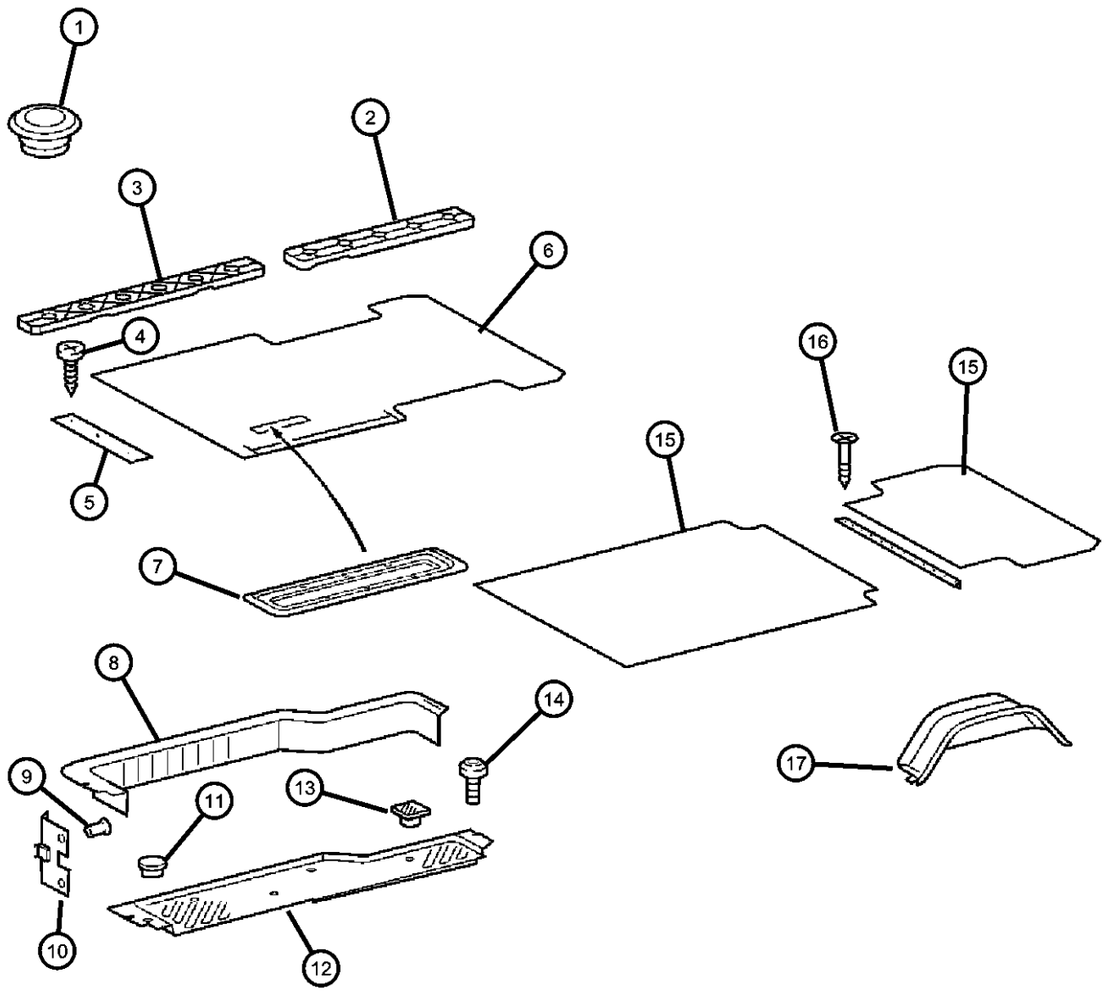

ITEM	PART NUMBER	QTY	LINE	SERIES	BODY	ENGINE	TRANS	TRIM	DESCRIPTION
	06104142AA	2	2, 6	L	51, 52, 54, 55, 56				
		2	2, 6	L	11, 12, 14, 15, 16				
		2	3, 7	L	12, 15, 16				
15		2							LINING, NONE, SPRINTER, (NOT SERVICED)
16	05134062AA	9	3, 7	L	12, 15, 16				SCREW
17									MAT, Wheelhouse
	05122563AA	2	3, 7	L	12, 15, 16				
	05131453AA	2	2, 6	L	11, 12, 14, 15, 16				
		2	2, 6	L	51, 52, 54, 55, 56				
-18									MOLDING, Cargo Area Carpet
	05104156AA	1	2, 6	L	11, 12, 14, 15, 16				Threshold for Partition Door
		1	3, 7	L	12, 15, 16				Threshold for Partition Door

SPRINTER (VA)

SERIES	LINE	BODY	ENGINE	TRANSMISSION
L = LOWLINE	3 = HD DODGE 2WD 6 = Lt. Duty DODGE 4WD 2 = Med. Duty DODGE 2WD 7 = Med. Duty DODGE 4WD	55 = Wagon 140" 54 = Wagon 118" 52 = Wagon 140" 51 = Wagon 118" 12 = Van 140" 11 = Van 118" 06 = Front Section 158" 14 = Van 118" 15 = Van 140" 16 = Van 158" 56 = Wagon 158" 01 = Chassis Forward Control 118" 02 = Chassis Forward Control 140"	EX8 = Engine-2.7L I5 Mercedes Turbo Diesel	DGJ = Transmission-5-Spd. Automatic,W5A580

Floor Lining, Entry Paneling & Footrest
Figure IVA-315

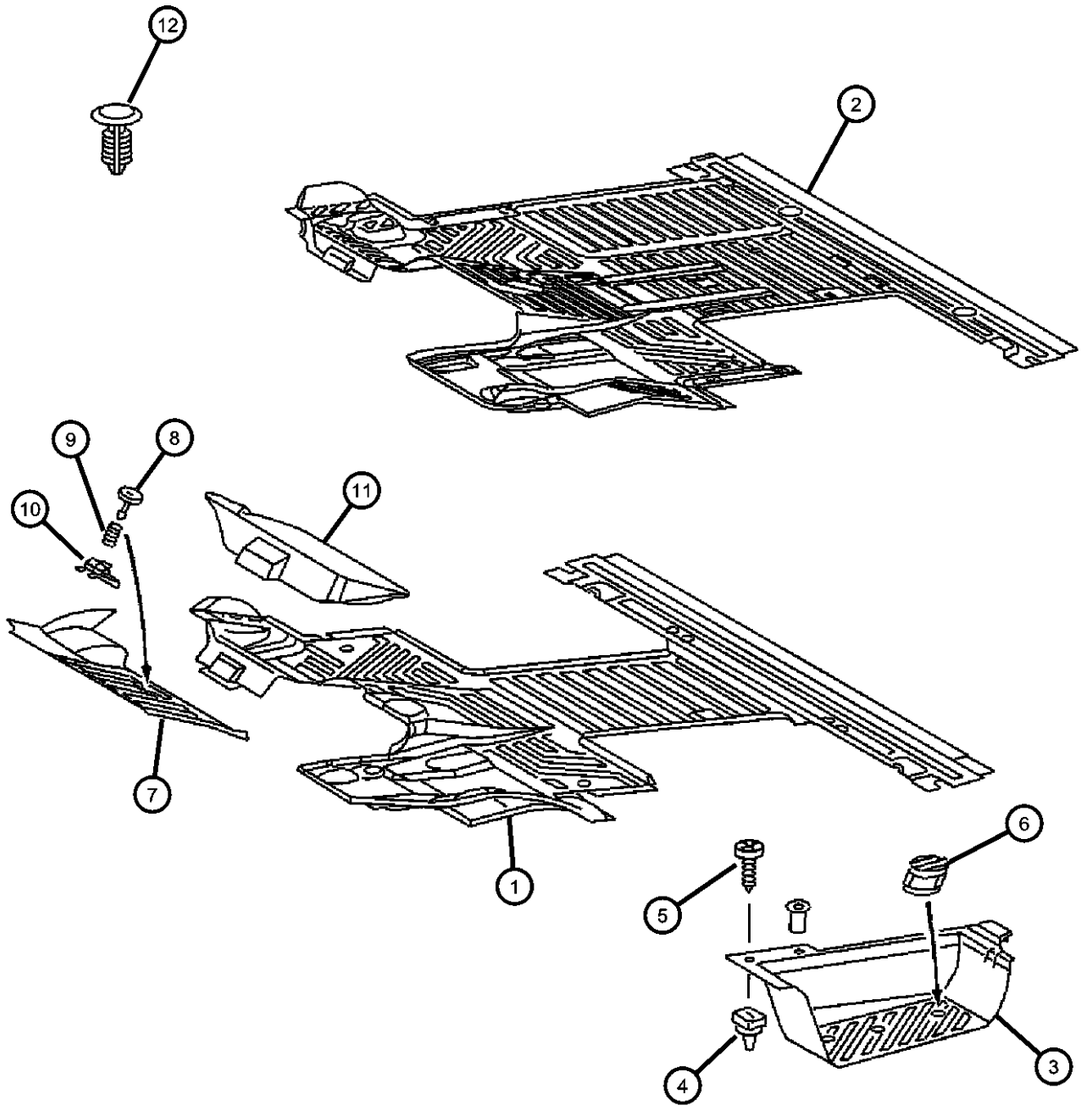

ITEM	PART NUMBER	QTY	LINE	SERIES	BODY	ENGINE	TRANS	TRIM	DESCRIPTION
1									MAT, Front Floor, Rubber
	05122614AA	1	3, 7	L	12, 15, 16				Lining
		1	2, 6	L	51, 52, 54, 55, 56				Lining
		1	2, 6	L	11, 12, 14, 15, 16				Lining
	05122633AA	1	3, 7	L	12, 15, 16				Rubber
		1	2, 6	L	11, 12, 14, 15, 16				Rubber
		1	2, 6	L	51, 52, 54, 55, 56				Rubber
	05122640AA	1	2, 6	L	11, 12, 14, 15, 16				Rubber, With Floor Console
		1	2, 6	L	51, 52, 54, 55, 56				Rubber, With Floor Console
		1	3, 7	L	12, 15, 16				Rubber, With Floor Console
2									MAT, Front Floor, Rubber
	05104264AA	1	2, 6	L	11, 12, 14, 15, 16				With Partition Wall
		1	3, 7	L	12, 15, 16				With Partition Wall
	05122635AA	1	2, 6	L	11, 12, 14, 15, 16				With Center Console
		1	2, 6	L	51, 52, 54, 55, 56				With Center Console
		1	3, 7	L	12, 15, 16				With Center Console
3									PLATE, Scuff
	05104265AA	1	2, 6	L	51, 52, 54, 55, 56				Left
		1	3, 7	L	12, 15, 16				Left
	05122821AA	1	2, 6	L	11, 12, 14, 15, 16				Right
		1	2, 6	L	51, 52, 54, 55, 56				Right
	05122822AA	1	2, 6	L	11, 12, 14, 15, 16				Illuminated Exit, Left
		1	2, 6	L	51, 52, 54, 55, 56				Illuminated Exit, Left

SPRINTER (VA)

SERIES	LINE	BODY	ENGINE	TRANSMISSION
L = LOWLINE	3 = HD DODGE 2WD 6 = Lt. Duty DODGE 4WD 2 = Med. Duty DODGE 2WD 7 = Med. Duty DODGE 4WD	55 = Wagon 140" 54 = Wagon 118" 52 = Wagon 140" 51 = Wagon 118" 12 = Van 140" 11 = Van 118" 06 = Front Section 158" 14 = Van 118" 15 = Van 140" 16 = Van 158" 56 = Wagon 158" 01 = Chassis Forward Control 118" 02 = Chassis Forward Control 140"	EX8 = Engine-2.7L I5 Mercedes Turbo Diesel	DGJ = Transmission-5-Spd. Automatic,W5A580

Floor Lining, Entry Paneling & Footrest
Figure IVA-315

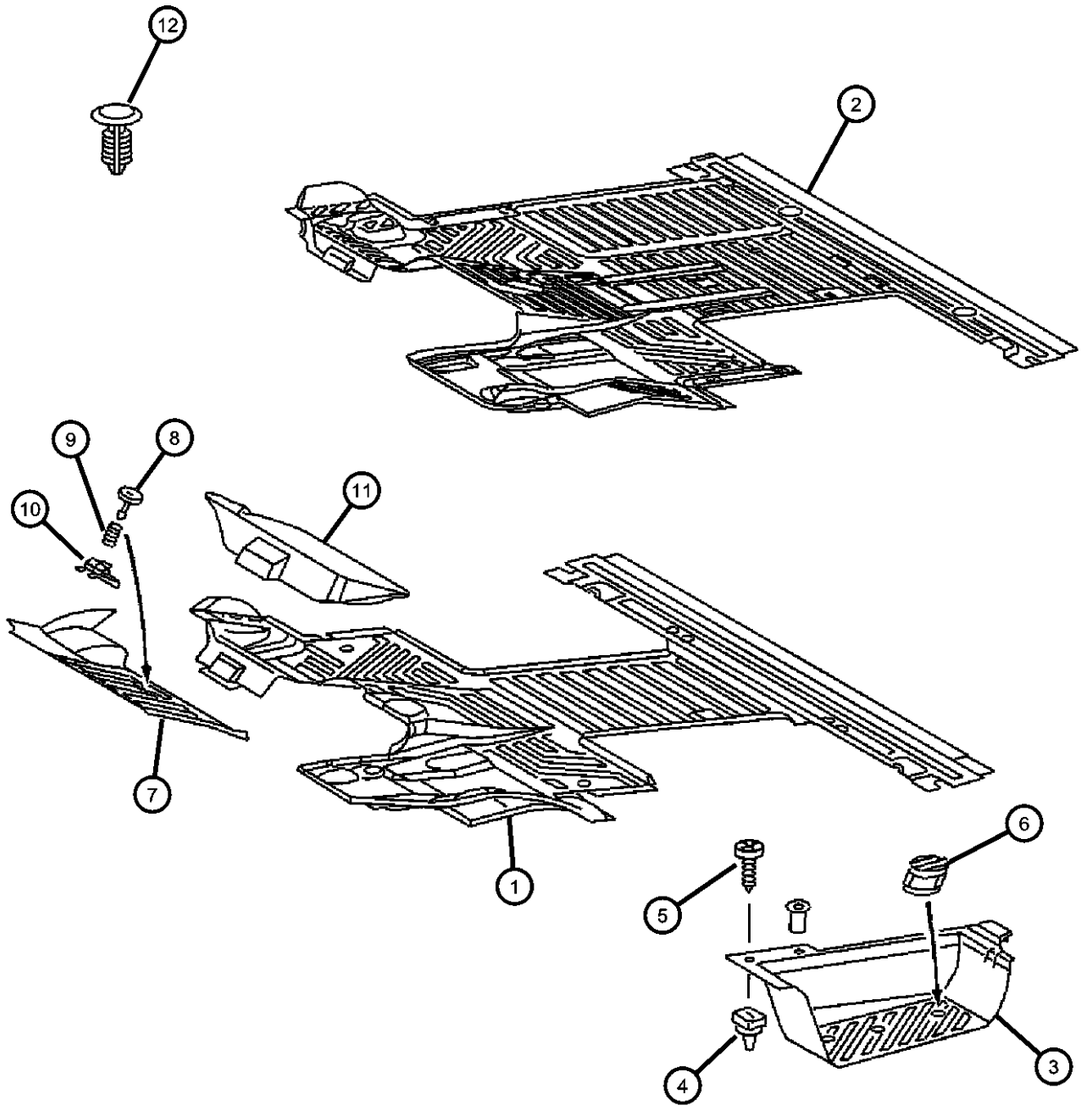

ITEM	PART NUMBER	QTY	LINE	SERIES	BODY	ENGINE	TRANS	TRIM	DESCRIPTION
		1	3, 7	L	12, 15, 16				Illuminated Exit, Left
		1	2, 6	L	11, 12, 14, 15, 16				Left
	05122824AA	1	2, 6	L	51, 52, 54, 55, 56				Illuminated Exit, Right
		1	3, 7	L	12, 15, 16				Illuminated Exit, Right
		1	2, 6	L	11, 12, 14, 15, 16				Illuminated Exit, Right
4									NUT, Plastic Snap-in
	05098837AA	6	2, 6	L	11, 12, 14, 15, 16				
		6	2, 6	L	51, 52, 54, 55, 56				
		6	3, 7	L	12, 15, 16				
5									SCREW
	06104575AA	6	2, 6	L	11, 12, 14, 15, 16				
		6	2, 6	L	51, 52, 54, 55, 56				
		6	3, 7	L	12, 15, 16				
6									PLUG
	05104549AA	3	2, 6	L	11, 12, 14, 15, 16				
		3	2, 6	L	51, 52, 54, 55, 56				
		3	3, 7	L	12, 15, 16				
7									COVER, Jack
	05122408AA	1	3, 7	L	12, 15, 16				
		1	2, 6	L	11, 12, 14, 15, 16				
		1	2, 6	L	51, 52, 54, 55, 56				
8									FASTENER, Footrest
	05122665AA	1	2, 6	L	11, 12, 14, 15, 16				

SPRINTER (VA)

SERIES	LINE	BODY	ENGINE	TRANSMISSION
L = LOWLINE	3 = HD DODGE 2WD 6 = Lt. Duty DODGE 4WD 2 = Med. Duty DODGE 2WD 7 = Med. Duty DODGE 4WD	55 = Wagon 140" 54 = Wagon 118" 52 = Wagon 140" 51 = Wagon 118" 12 = Van 140" 11 = Van 118" 06 = Front Section 158" 14 = Van 118" 15 = Van 140" 16 = Van 158" 56 = Wagon 158" 01 = Chassis Forward Control 118" 02 = Chassis Forward Control 140"	EX8 = Engine-2.7L I5 Mercedes Turbo Diesel	DGJ = Transmission-5-Spd. Automatic,W5A580

AR = use ase required - = Non illustrrated part

Floor Lining, Entry Paneling & Footrest
Figure IVA-315

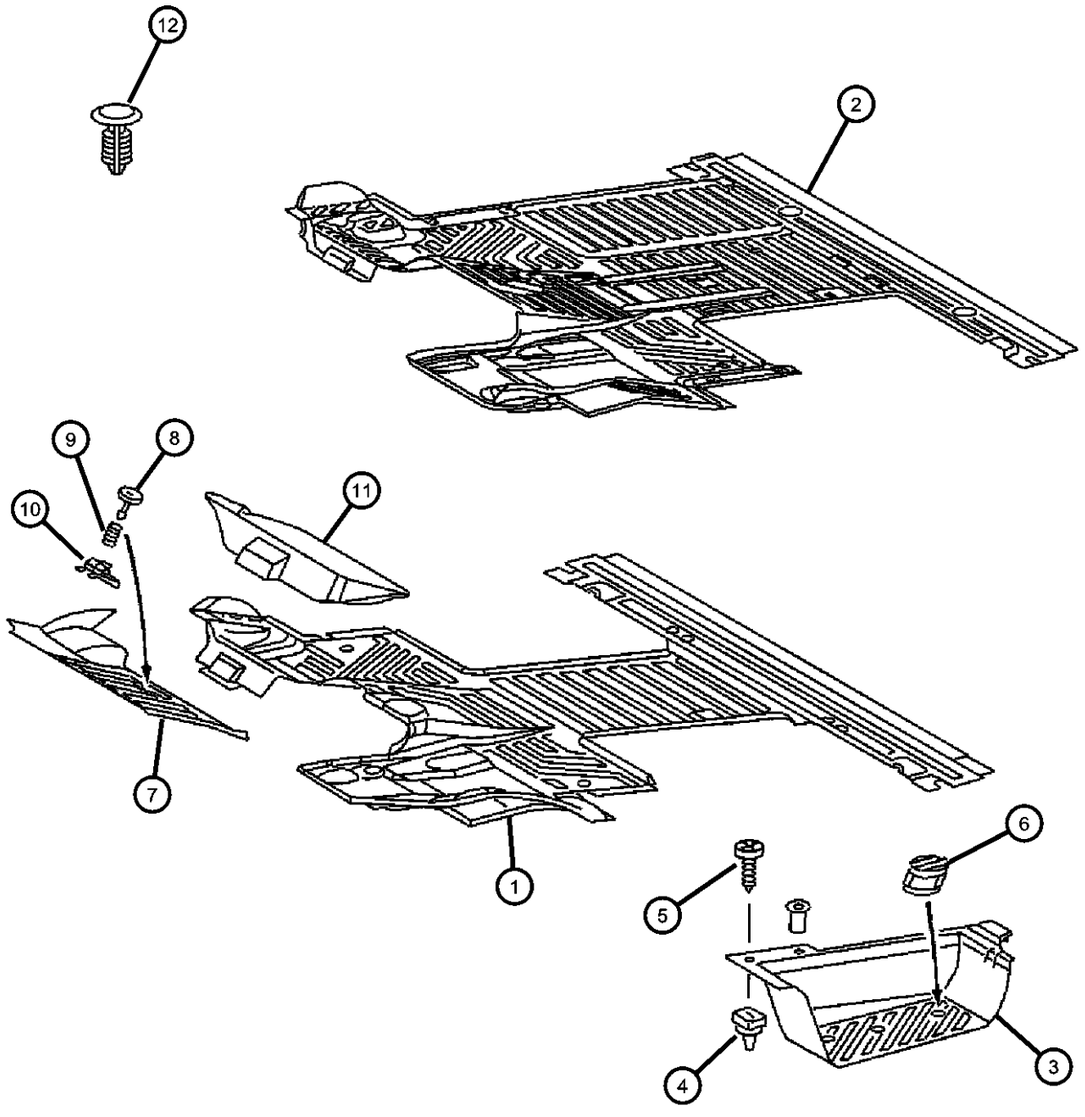

ITEM	PART NUMBER	QTY	LINE	SERIES	BODY	ENGINE	TRANS	TRIM	DESCRIPTION
		1	2, 6	L	51, 52, 54, 55, 56				
		1	3, 7	L	12, 15, 16				
9									SPRING
	05125845AA	1	2, 6	L	11, 12, 14, 15, 16				
		1	2, 6	L	51, 52, 54, 55, 56				
		1	3, 7	L	12, 15, 16				
10									CLIP, Footrest
	05125587AA	1	2, 6	L	11, 12, 14, 15, 16				
		1	2, 6	L	51, 52, 54, 55, 56				
		1	3, 7	L	12, 15, 16				
11									SUPPORT, Jack
	05122662AA	1	2, 6	L	11, 12, 14, 15, 16				
		1	2, 6	L	51, 52, 54, 55, 56				
		1	3, 7	L	12, 15, 16				
12									PLUG, Seat Mounting
	05103817AA	1	2, 6	L	11, 12, 14, 15, 16				
		1	2, 6	L	51, 52, 54, 55, 56				
		1	3, 7	L	12, 15, 16				
-13									SEAL, Paneling to Entry Front
	05125906AA	4	2, 6	L	11, 12, 14, 15, 16				
		4	2, 6	L	51, 52, 54, 55, 56				
		4	3, 7	L	12, 15, 16				

SPRINTER (VA)

SERIES	LINE	BODY	ENGINE	TRANSMISSION
L = LOWLINE	3 = HD DODGE 2WD 6 = Lt. Duty DODGE 4WD 2 = Med. Duty DODGE 2WD 7 = Med. Duty DODGE 4WD	55 = Wagon 140" 54 = Wagon 118" 52 = Wagon 140" 51 = Wagon 118" 12 = Van 140" 11 = Van 118" 06 = Front Section 158" 14 = Van 118" 15 = Van 140" 16 = Van 158" 56 = Wagon 158" 01 = Chassis Forward Control 118" 02 = Chassis Forward Control 140"	EX8 = Engine-2.7L I5 Mercedes Turbo Diesel	DGJ = Transmission-5-Spd. Automatic,W5A580

Floor - Rubber
Figure IVA-320

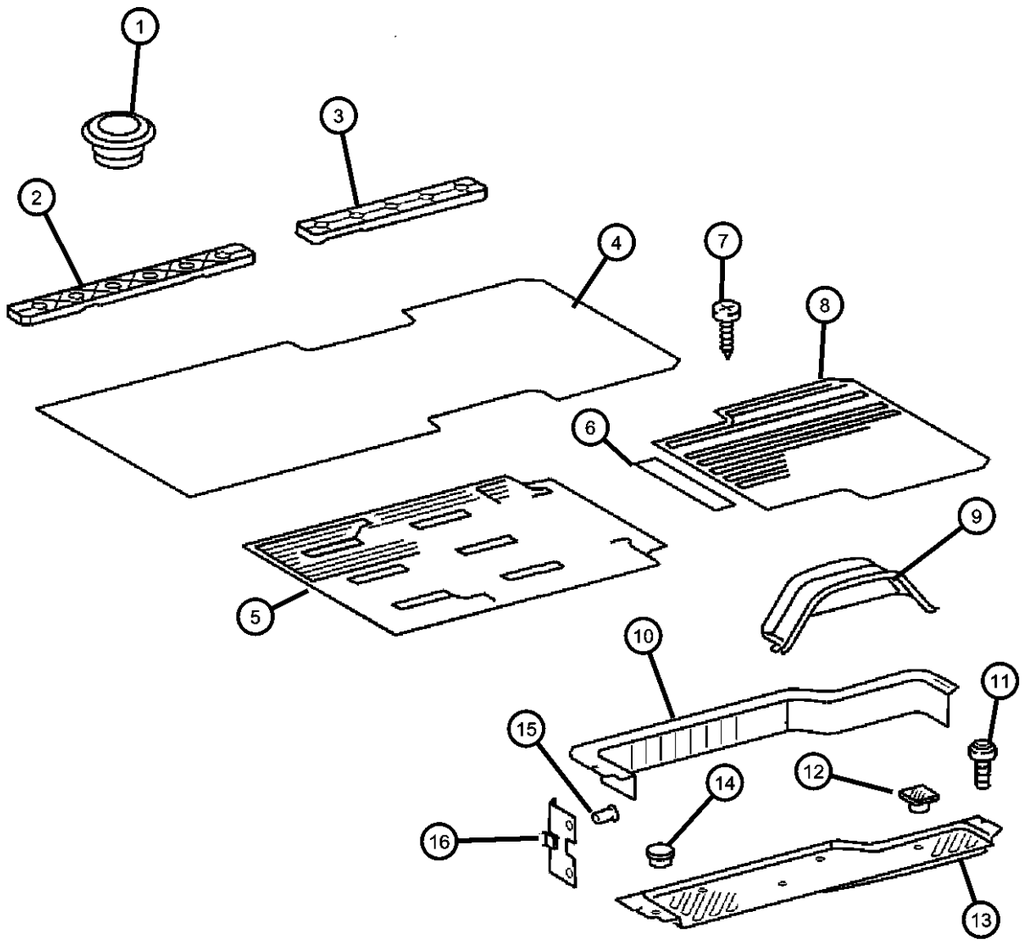

ITEM	PART NUMBER	QTY	LINE	SERIES	BODY	ENGINE	TRANS	TRIM	DESCRIPTION
1									PLUG
	05125991AA	99	2, 6	L	51, 52, 54, 55, 56				
		2	3, 7	L	12, 15, 16				
2									COVER, Seat Track
	05122650AA	2	2, 6	L	11, 12, 14, 15, 16				Front
		1	2, 6	L	51, 52, 54, 55, 56				Front
		1	3, 7	L	12, 15, 16				Front
3									COVER, Seat Track
	05122642AA	1	2, 6	L	11, 12, 14, 15, 16				Rear
		1	2, 6	L	51, 52, 54, 55, 56				Rear
		1	3, 7	L	12, 15, 16				Rear
4									MAT, Floor
	05131455AA	1	2, 6	L	51, 54				
		1	2, 6	L	11, 14				
5									MAT, Front Floor, Rubber
	05122564AA	1	3, 7	L	12, 15				140 Inch Wheelbase
	05122572AA	1	3, 7	L	16				158 Inch Wheelbase
	05131462AA	1	2, 6	L	12, 15				140 Inch Wheelbase
		1	2, 6	L	52, 55				140 Inch Wheelbase
	05131469AA	1	2, 6	L	16				158 Inch Wheelbase
		1	2, 6	L	56				158 Inch Wheelbase
6									PLATE
	05122835AA	1	2, 6	L	11, 12, 14, 15, 16				With Load Compartment Sliding Door, Right
		1	2, 6	L	51, 52, 54, 55, 56				With Load Compartment Sliding Door, Right
		1	3, 7	L	12, 15, 16				With Load Compartment Sliding Door, Right

SPRINTER (VA)

SERIES	LINE	BODY	ENGINE	TRANSMISSION
L = LOWLINE	3 = HD DODGE 2WD 6 = Lt. Duty DODGE 4WD 2 = Med. Duty DODGE 2WD 7 = Med. Duty DODGE 4WD	55 = Wagon 140" 54 = Wagon 118" 52 = Wagon 140" 51 = Wagon 118" 12 = Van 140" 11 = Van 118" 06 = Front Section 158" 14 = Van 118" 15 = Van 140" 16 = Van 158" 56 = Wagon 158" 01 = Chassis Forward Control 118" 02 = Chassis Forward Control 140"	EX8 = Engine-2.7L I5 Mercedes Turbo Diesel	DGJ = Transmission-5-Spd. Automatic,W5A580

Floor - Rubber
Figure IVA-320

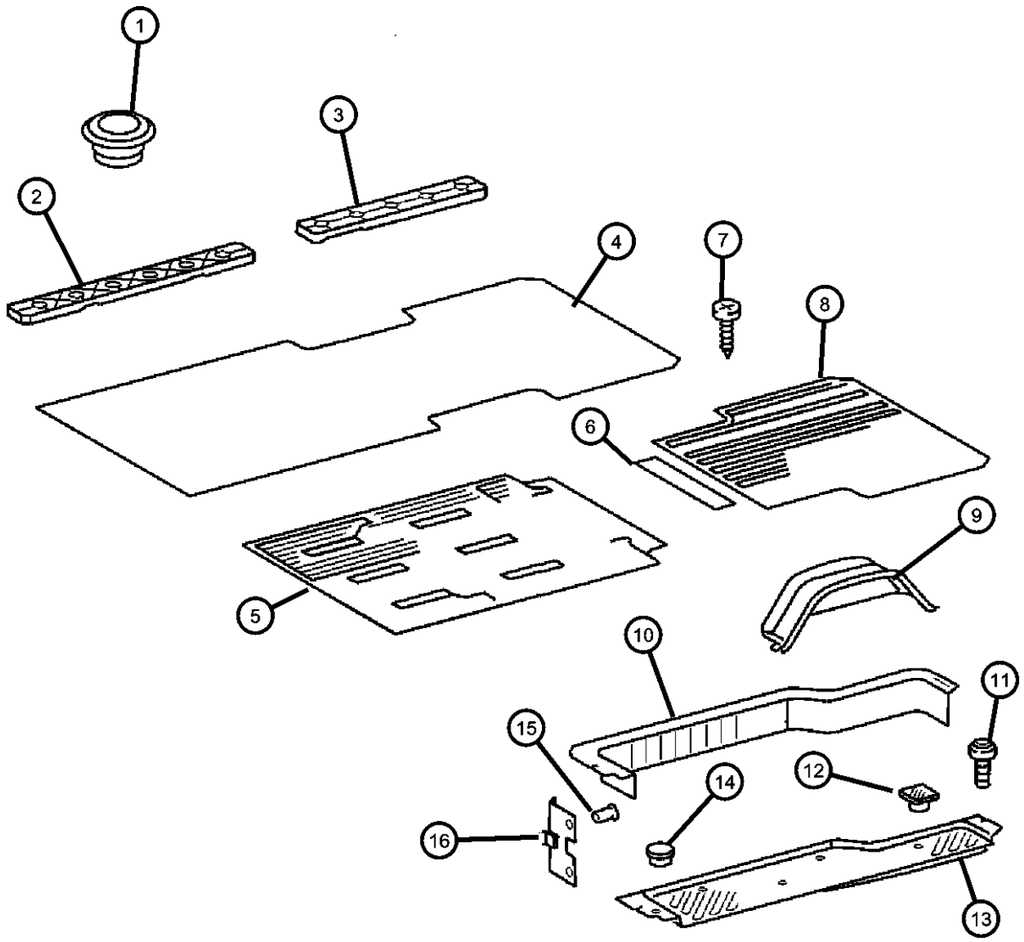

ITEM	PART NUMBER	QTY	LINE	SERIES	BODY	ENGINE	TRANS	TRIM	DESCRIPTION
	05122837AA	1	2, 6	L	11, 12, 14, 15, 16				With Load Compartment Sliding Door, Left
		1	2, 6	L	51, 52, 54, 55, 56				With Load Compartment Sliding Door, Left
		1	3, 7	L	12, 15, 16				With Load Compartment Sliding Door, Left
	05122840AA	1	3, 7	L	12, 15, 16				With Load Compartment Sliding Door, Left & Right
	05122842AA	1	2, 6	L	11, 12, 14, 15, 16				Without Load Compartment Sliding Door
		1	2, 6	L	51, 52, 54, 55, 56				Without Load Compartment Sliding Door
		1	3, 7	L	12, 15, 16				Without Load Compartment Sliding Door
		1	2, 6	L	11, 12, 14, 15, 16				With Load Compartment Sliding Door, Left & Right
		1	2, 6	L	51, 52, 54, 55, 56				With Load Compartment Sliding Door, Left & Right
7									RIVET, RIVET
	05133555AA	7	3, 7	L	12, 15, 16				
		7	2, 6	L	11, 12, 14, 15, 16				
		7	2, 6	L	51, 52, 54, 55, 56				
8									MAT, Floor
	05122580AA	1	3, 7	L	12, 15				140 Inch Wheelbase, Rear
	05122581AA	1	3, 7	L	16				158 Inch Wheelbase, Rear
	05131477AA	1	2, 6	L	16				158 Inch Wheelbase, Rear
		1	2, 6	L	56				158 Inch Wheelbase, Rear
	05131478AA	1	2, 6	L	12, 15				140 Inch Wheelbase, Rear
		1	2, 6	L	52, 55				140 Inch Wheelbase, Rear
9									MAT, Wheelhouse
	05122563AA	2	3, 7	L	12, 15, 16				3500 GVW
	05131453AA	2	2, 6	L	11, 12, 14, 15, 16				2500 GVW

SPRINTER (VA)

SERIES	LINE	BODY	ENGINE	TRANSMISSION
L = LOWLINE	3 = HD DODGE 2WD 6 = Lt. Duty DODGE 4WD 2 = Med. Duty DODGE 2WD 7 = Med. Duty DODGE 4WD	55 = Wagon 140" 54 = Wagon 118" 52 = Wagon 140" 51 = Wagon 118" 12 = Van 140" 11 = Van 118" 06 = Front Section 158" 14 = Van 118" 15 = Van 140" 16 = Van 158" 56 = Wagon 158" 01 = Chassis Forward Control 118" 02 = Chassis Forward Control 140"	EX8 = Engine-2.7L I5 Mercedes Turbo Diesel	DGJ = Transmission-5-Spd. Automatic,W5A580

Floor - Rubber
Figure IVA-320

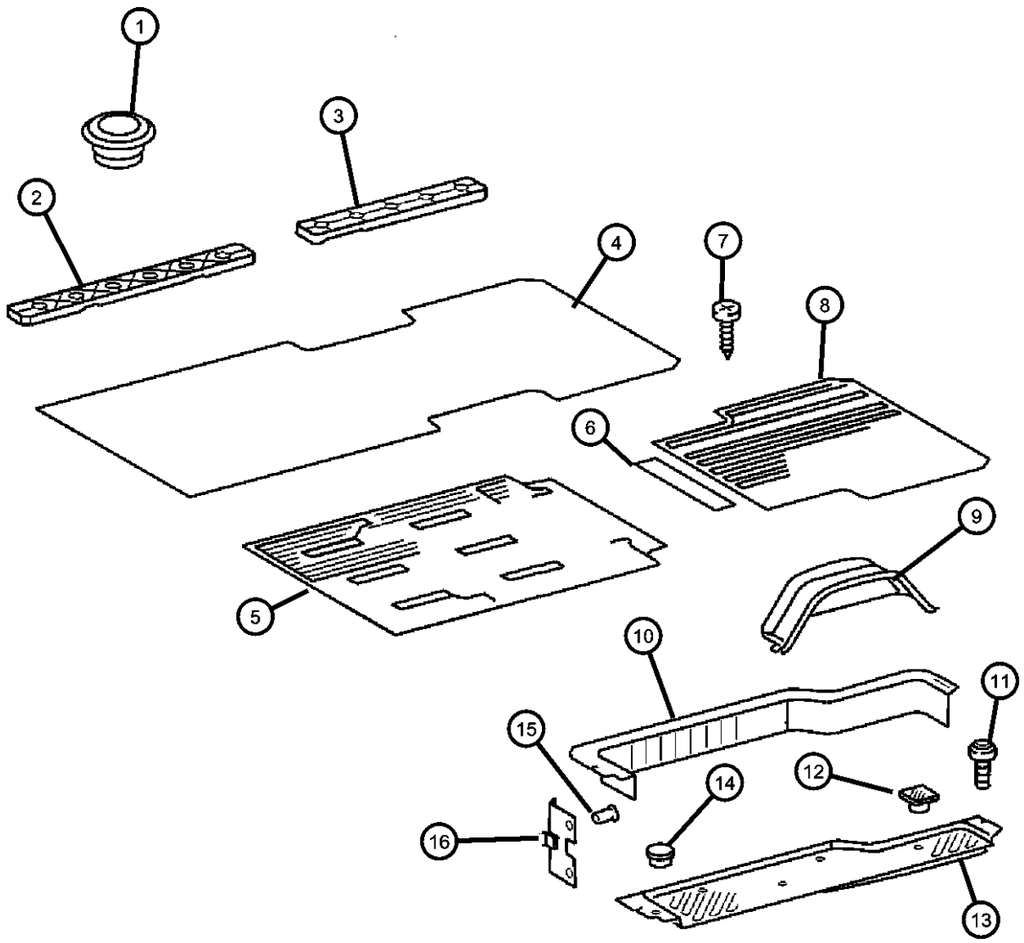

ITEM	PART NUMBER	QTY	LINE	SERIES	BODY	ENGINE	TRANS	TRIM	DESCRIPTION
		2	2, 6	L	51, 52, 54, 55, 56				2500 GVW
10									PANEL, Sliding Door Trim
	05122825AA	1	2, 6	L	11, 12, 14, 15, 16				Sliding Door Left
		1	2, 6	L	51, 52, 54, 55, 56				Sliding Door Left
		1	3, 7	L	12, 15, 16				Sliding Door Left
	05122832AA	1	2, 6	L	51, 52, 54, 55, 56				Sliding Door Right With Entrance Light
		1	3, 7	L	12, 15, 16				Sliding Door Right With Entrance Light
	05122827AA	1	2, 6	L	11, 12, 14, 15, 16				Sliding Door Right
		1	2, 6	L	51, 52, 54, 55, 56				Sliding Door Right
		1	3, 7	L	12, 15, 16				Sliding Door Right
	05122830AA	1	2, 6	L	11, 12, 14, 15, 16				Sliding Door Left With Entrance Light
		1	2, 6	L	51, 52, 54, 55, 56				Sliding Door Left With Entrance Light
		1	3, 7	L	12, 15, 16				Sliding Door Left With Entrance Light
		1	2, 6	L	11, 12, 14, 15, 16				Sliding Door Right With Entrance Light
11									SCREW
	06104142AA	2	2, 6	L	51, 52, 54, 55, 56				
		2	2, 6	L	11, 12, 14, 15, 16				
		2	3, 7	L	12, 15, 16				
12									PLUG
	05122811AA	4	2, 6	L	11, 12, 14, 15, 16				
		4	2, 6	L	51, 52, 54, 55, 56				

SPRINTER (VA)

SERIES	LINE	BODY	ENGINE	TRANSMISSION
L = LOWLINE	3 = HD DODGE 2WD 6 = Lt. Duty DODGE 4WD 2 = Med. Duty DODGE 2WD 7 = Med. Duty DODGE 4WD	55 = Wagon 140" 54 = Wagon 118" 52 = Wagon 140" 51 = Wagon 118" 12 = Van 140" 11 = Van 118" 06 = Front Section 158" 14 = Van 118" 15 = Van 140" 16 = Van 158" 56 = Wagon 158" 01 = Chassis Forward Control 118" 02 = Chassis Forward Control 140"	EX8 = Engine-2.7L I5 Mercedes Turbo Diesel	DGJ = Transmission-5-Spd. Automatic,W5A580

Floor - Rubber
Figure IVA-320

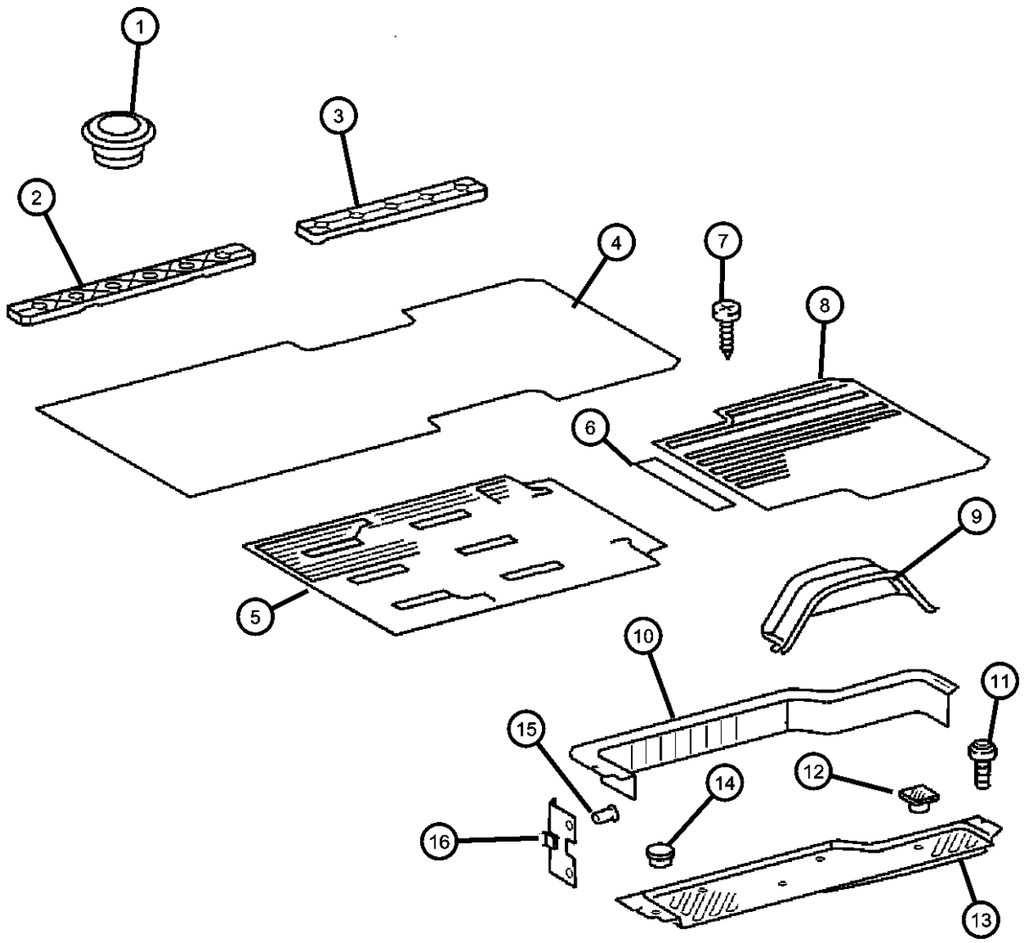

ITEM	PART NUMBER	QTY	LINE	SERIES	BODY	ENGINE	TRANS	TRIM	DESCRIPTION
		4	3, 7	L	12, 15, 16				
13									PAD, Side Cargo Door Sill
	05122815AA	1	2, 6	L	51, 52, 54, 55, 56				Entrance Sliding Door, Left
		1	3, 7	L	12, 15, 16				Entrance Sliding Door, Left
	05122816AA	1	2, 6	L	11, 12, 14, 15, 16				Entrance Sliding Door, Right
		1	2, 6	L	51, 52, 54, 55, 56				Entrance Sliding Door, Right
		1	2, 6	L	11, 12, 14, 15, 16				Entrance Sliding Door, Left
		1	3, 7	L	12, 15, 16				Entrance Sliding Door, Right
14									PLUG
	05122808AA	1	2, 6	L	11, 12, 14, 15, 16				
		1	2, 6	L	51, 52, 54, 55, 56				
		1	3, 7	L	12, 15, 16				
15									RIVET
	05134061AA	8	2, 6	L	51, 52, 54, 55, 56				
		8	2, 6	L	11, 12, 14, 15, 16				
		16	3, 7	L	12, 15, 16				
16									CLIP, Floor Trim
	05125584AA	4	2, 6	L	11, 12, 14, 15, 16				
		4	2, 6	L	51, 52, 54, 55, 56				
		8	3, 7	L	12, 15, 16				

SPRINTER (VA)

SERIES	LINE	BODY	ENGINE	TRANSMISSION
L = LOWLINE	3 = HD DODGE 2WD 6 = Lt. Duty DODGE 4WD 2 = Med. Duty DODGE 2WD 7 = Med. Duty DODGE 4WD	55 = Wagon 140" 54 = Wagon 118" 52 = Wagon 140" 51 = Wagon 118" 12 = Van 140" 11 = Van 118" 06 = Front Section 158" 14 = Van 118" 15 = Van 140" 16 = Van 158" 56 = Wagon 158" 01 = Chassis Forward Control 118" 02 = Chassis Forward Control 140"	EX8 = Engine-2.7L I5 Mercedes Turbo Diesel	DGJ = Transmission-5-Spd. Automatic,W5A580

Floor - Wooden
Figure IVA-330

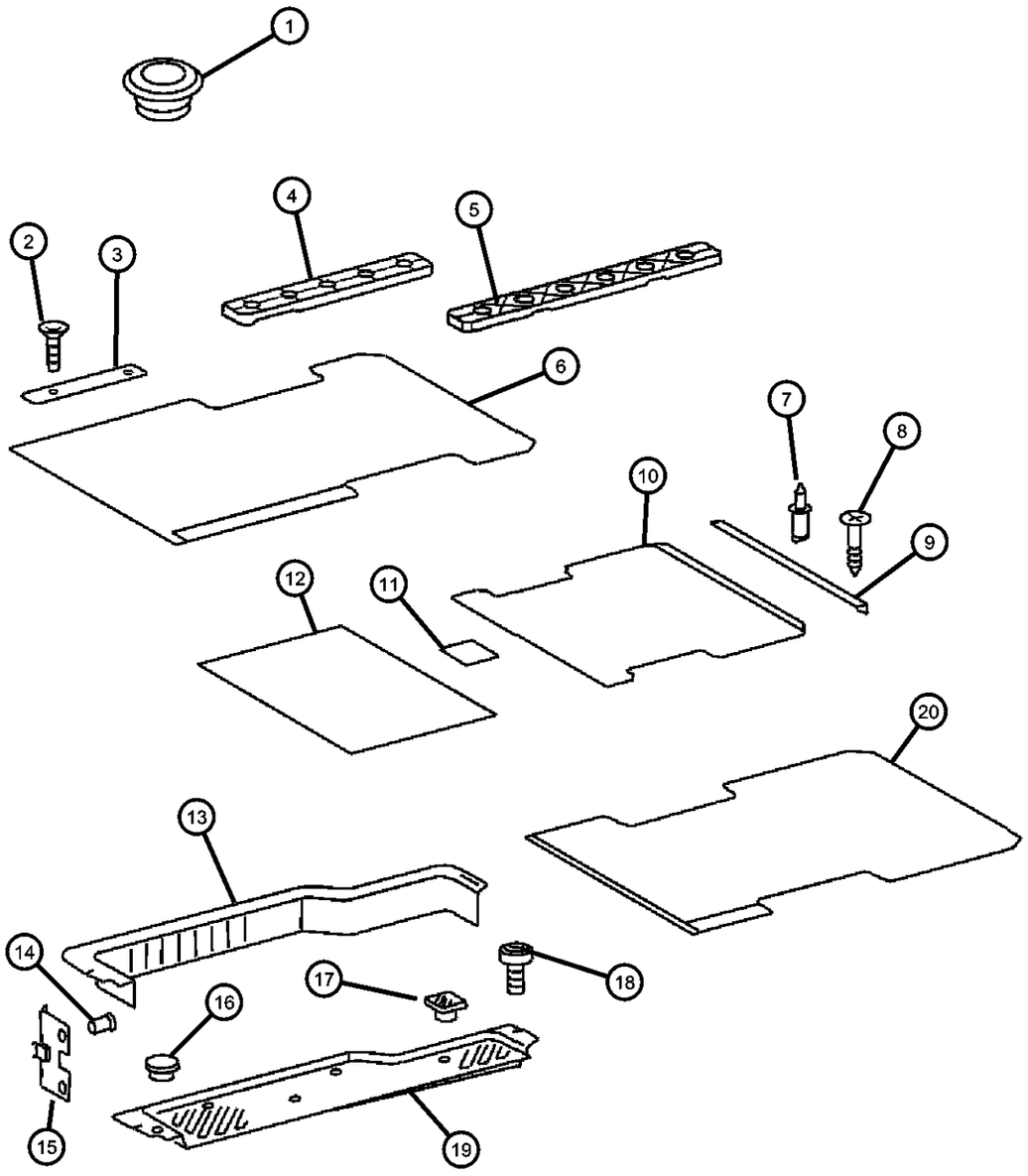

ITEM	PART NUMBER	QTY	LINE	SERIES	BODY	ENGINE	TRANS	TRIM	DESCRIPTION
1									PLUG
	05125991AA	AR	2, 6	L	11, 12, 14, 15, 16				
		AR	2, 6	L	51, 52, 54, 55, 56				
		1	3, 7	L	12, 15, 16				
2		1							SCREW, (NOT SERVICED)
3		1							PLATE, (NOT SERVICED)
4									COVER, Seat Track
	05122642AA	1	2, 6	L	11, 12, 14, 15, 16				Rear
		1	2, 6	L	51, 52, 54, 55, 56				Rear
		1	3, 7	L	12, 15, 16				Rear
5									COVER, Seat Track
	05122650AA	2	2, 6	L	11, 12, 14, 15, 16				Front
		1	2, 6	L	51, 52, 54, 55, 56				Front
		1	3, 7	L	12, 15, 16				Front
6									FLOOR, Wooden
	05122778AA	1	2, 6	L	52, 55, 56				With Front Seats, 140 & 158 Inch Wheelbase
		1	3, 7	L	12, 15, 16				With Front Seats, 140 & 158 Inch Wheelbase
	05131631AA	1	2, 6	L	11, 14				With 118 Inch WHeelbase, Cargo, No Seats
	05131663AA	1	2, 6	L	51, 54				With 118 Inch Wheelbase, Passenger Van With Seats
7									RIVET
	06104871AA	16	2, 6	L	12, 15				
		16	2, 6	L	52, 55				
		16	3, 7	L	12, 15				
8	05134062AA	9	3, 7	L	12, 15, 16				SCREW

SPRINTER (VA)

SERIES	LINE	BODY	ENGINE	TRANSMISSION
L = LOWLINE	3 = HD DODGE 2WD 6 = Lt. Duty DODGE 4WD 2 = Med. Duty DODGE 2WD 7 = Med. Duty DODGE 4WD	55 = Wagon 140" 54 = Wagon 118" 52 = Wagon 140" 51 = Wagon 118" 12 = Van 140" 11 = Van 118" 06 = Front Section 158" 14 = Van 118" 15 = Van 140" 16 = Van 158" 56 = Wagon 158" 01 = Chassis Forward Control 118" 02 = Chassis Forward Control 140"	EX8 = Engine-2.7L I5 Mercedes Turbo Diesel	DGJ = Transmission-5-Spd. Automatic,W5A580

AR = use ase required - = Non illustrrated part

<< RETURN TO GROUP INDEX

Floor - Wooden
Figure IVA-330

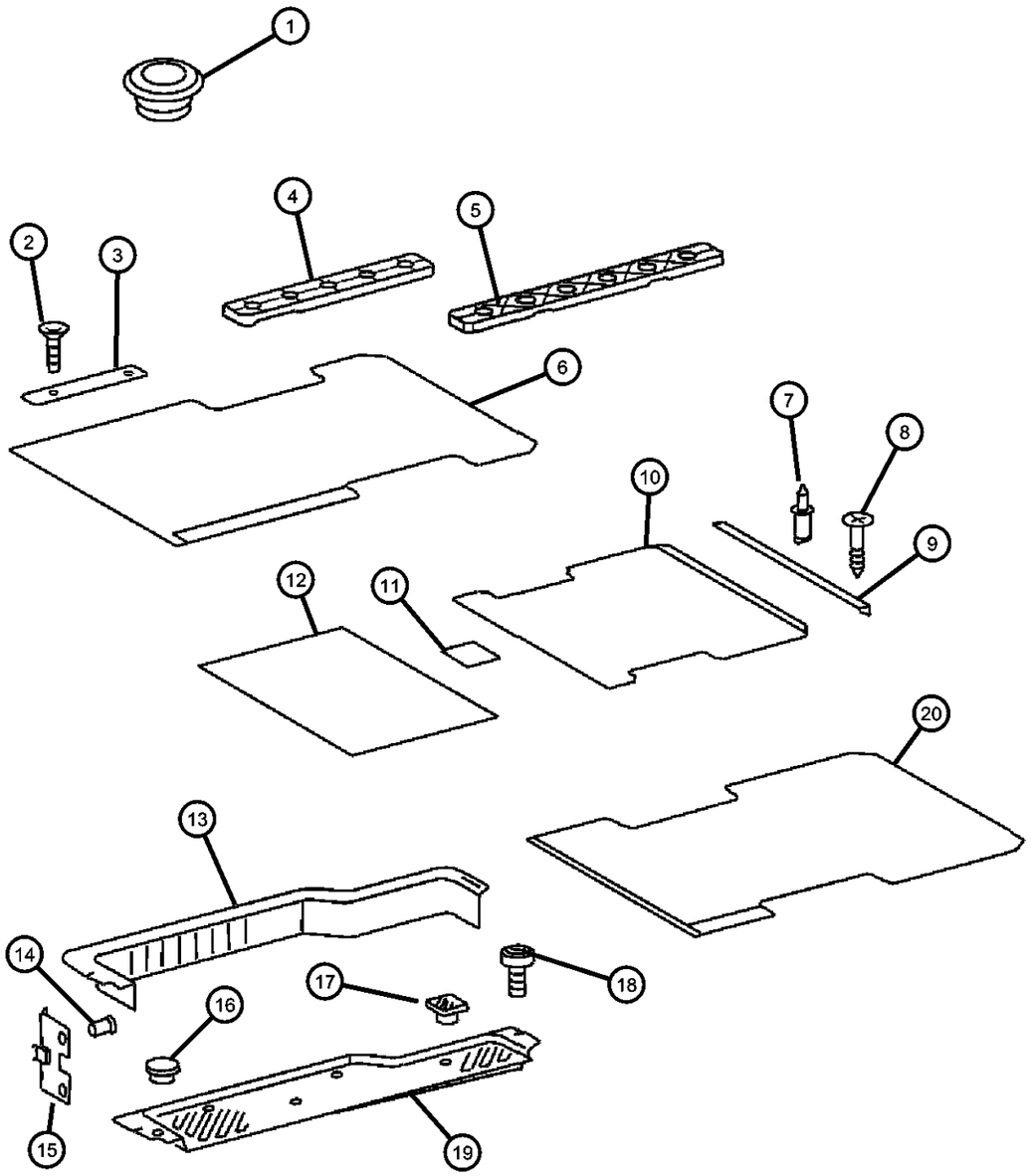

ITEM	PART NUMBER	QTY	LINE	SERIES	BODY	ENGINE	TRANS	TRIM	DESCRIPTION
9									MOLDING, Cargo Area Carpet
	05122669AA	1	2, 6	L	11, 12, 14, 15, 16				
		1	2, 6	L	51, 52, 54, 55, 56				
		1	3, 7	L	12, 15, 16				
10									FLOOR, Wooden
	05122802AA	1	2, 6	L	12, 15				With Seats, 140 Inch Wheelbase, Rear
		1	2, 6	L	52, 55				With Seats, 140 Inch Wheelbase, Rear
	05122804AA	1	2, 6	L	16				With Seats, 158 Inch Wheelbase, Rear
		1	2, 6	L	56				With Seats, 158 Inch Wheelbase, Rear
	05127784AA	1	2, 6	L	16				Without Seats, 158 Inch Wheelbase, Rear
		1	3, 7	L	16				Without Seats, 158 Inch Wheelbase, Rear
	05127806AA	1	2, 6	L	12, 15				Without Seats - 140 Inch Wheelbase, Rear
		1	3, 7	L	12, 15				Without Seats - 140 Inch Wheelbase, Rear
11									MOLDING, Cargo Area Carpet
	05122671AA	5	2, 6	L	12, 15				
		5	2, 6	L	52, 55				
		5	3, 7	L	12, 15				
12									FLOOR, Wooden
	05122730AA	1	3, 7	L	12, 15, 16				Without Seats 8 mm Thick, 140 & 158 Inch Wheelbase,Without Sliding Door
		1	2, 6	L	12, 15, 16				Without Seats 8 mm Thick, 140 & 158 Inch Wheelbase
	05122732AA	1	3, 7	L	12, 15, 16				Without Seats 8 mm Thick, 140 & 158 Inch Wheelbase,With Sliding Door

SPRINTER (VA)

SERIES	LINE	BODY	ENGINE	TRANSMISSION
L = LOWLINE	3 = HD DODGE 2WD 6 = Lt. Duty DODGE 4WD 2 = Med. Duty DODGE 2WD 7 = Med. Duty DODGE 4WD	55 = Wagon 140" 54 = Wagon 118" 52 = Wagon 140" 51 = Wagon 118" 12 = Van 140" 11 = Van 118" 06 = Front Section 158" 14 = Van 118" 15 = Van 140" 16 = Van 158" 56 = Wagon 158" 01 = Chassis Forward Control 118" 02 = Chassis Forward Control 140"	EX8 = Engine-2.7L I5 Mercedes Turbo Diesel	DGJ = Transmission-5-Spd. Automatic,W5A580

AR = use ase required - = Non illustrrated part

Floor - Wooden
Figure IVA-330

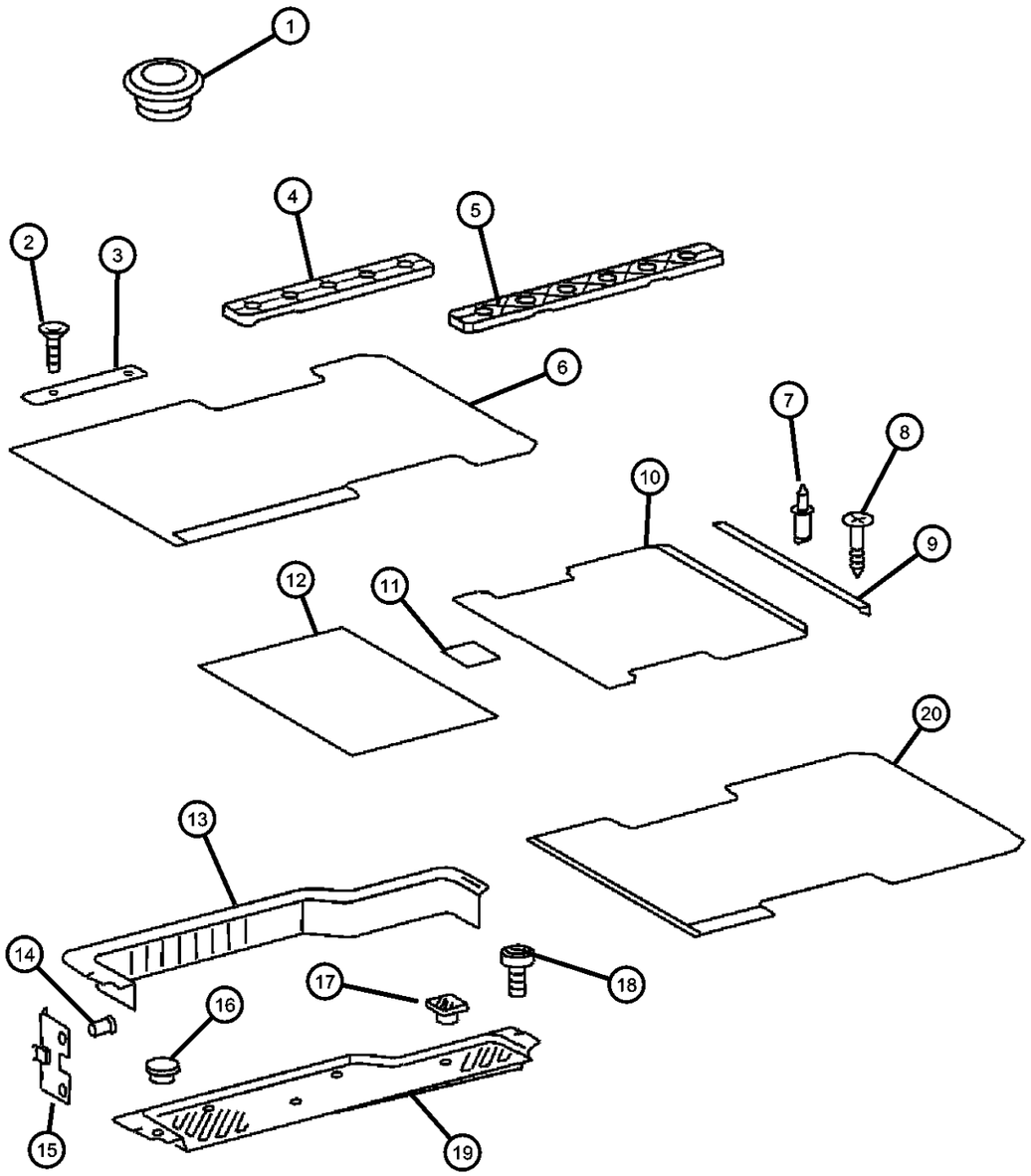

ITEM	PART NUMBER	QTY	LINE	SERIES	BODY	ENGINE	TRANS	TRIM	DESCRIPTION
		1	2, 6	L	12, 15, 16				Without Seats 8 mm Thick, 140 & 158 Inch Wheelbase,With Sliding Door
	05122778AA	1	2, 6	L	52, 55, 56				With Seats, 140 & 158 Inch Wheelbase
	05131631AA	1	2, 6	L	11, 14				No Seat - Cargo - 118 Inch Wheelbase
		1	3, 7	L	12, 15, 16				With Seats, 140 & 158 Inch Wheelbase
13									PANEL, Sliding Door Trim
	05122827AA	1	2, 6	L	11, 12, 14, 15, 16				
		1	2, 6	L	51, 52, 54, 55, 56				
		1	3, 7	L	12, 15, 16				
14									RIVET
	05134061AA	16	2, 6	L	11, 12, 14, 15, 16				
		8	2, 6	L	51, 52, 54, 55, 56				
		8	3, 7	L	12, 15, 16				
15									CLIP, Floor Trim
	05125584AA	4	2, 6	L	11, 12, 14, 15, 16				
		4	2, 6	L	51, 52, 54, 55, 56				
		4	3, 7	L	12, 15, 16				
16									PLUG
	05122808AA	1	2, 6	L	11, 12, 14, 15, 16				
		1	2, 6	L	51, 52, 54, 55, 56				
		1	3, 7	L	12, 15, 16				
17									PLUG

SPRINTER (VA)

SERIES	LINE	BODY	ENGINE	TRANSMISSION
L = LOWLINE	3 = HD DODGE 2WD 6 = Lt. Duty DODGE 4WD 2 = Med. Duty DODGE 2WD 7 = Med. Duty DODGE 4WD	55 = Wagon 140" 54 = Wagon 118" 52 = Wagon 140" 51 = Wagon 118" 12 = Van 140" 11 = Van 118" 06 = Front Section 158" 14 = Van 118" 15 = Van 140" 16 = Van 158" 56 = Wagon 158" 01 = Chassis Forward Control 118" 02 = Chassis Forward Control 140"	EX8 = Engine-2.7L I5 Mercedes Turbo Diesel	DGJ = Transmission-5-Spd. Automatic,W5A580

AR = use ase required - = Non illustrrated part

Floor - Wooden
Figure IVA-330

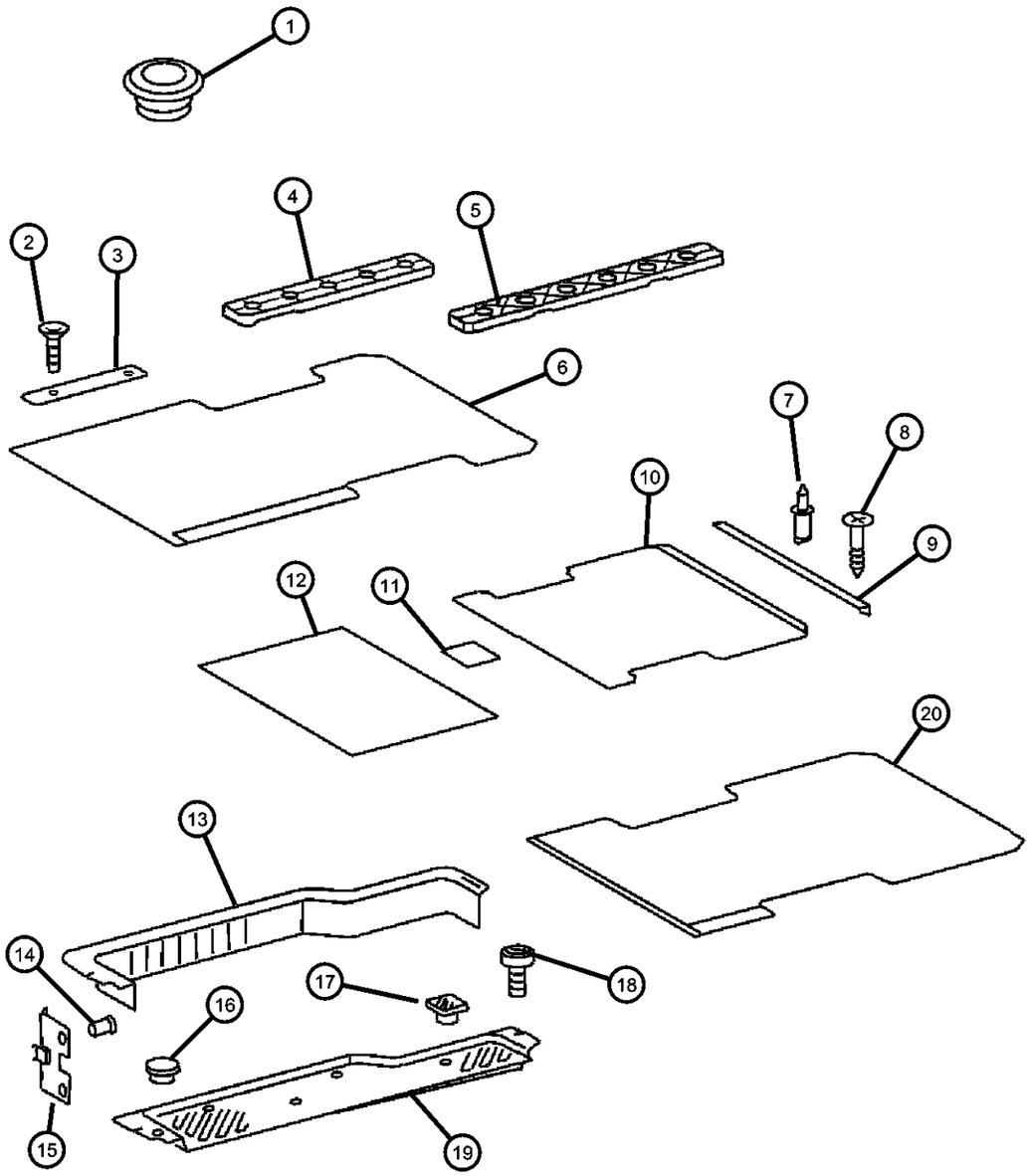

ITEM	PART NUMBER	QTY	LINE	SERIES	BODY	ENGINE	TRANS	TRIM	DESCRIPTION
	05122811AA	4	2, 6	L	11, 12, 14, 15, 16				
		4	2, 6	L	51, 52, 54, 55, 56				
		4	3, 7	L	12, 15, 16				
18									SCREW
	06104142AA	2	2, 6	L	11, 12, 14, 15, 16				
		2	3, 7	L	12, 15, 16				
		2	2, 6	L	51, 52, 54, 55, 56				
19									PAD, Side Cargo Door Sill
	05122815AA	1	2, 6	L	11, 12, 14, 15, 16				Entrance Sliding Door, Left
		1	2, 6	L	51, 52, 54, 55, 56				Entrance Sliding Door, Left
		1	3, 7	L	12, 15, 16				Entrance Sliding Door, Left
	05122816AA	1	2, 6	L	11, 12, 14, 15, 16				Entrance Sliding Door, Right
		1	2, 6	L	51, 52, 54, 55, 56				Entrance Sliding Door, Right
		1	3, 7	L	12, 15, 16				Entrance Sliding Door, Right
20									FLOOR, Wooden
	05122804AA	1	2, 6	L	16				With Seats - 158 Inch Wheelbase
		1	2, 6	L	56				With Seats - 158 Inch Wheelbase
	05127784AA	1	2, 6	L	16				Without Seats - 158 Inch Wheelbase
		1	3, 7	L	16				Without Seats - 158 Inch Wheelbase
-21									MOLDING, Cargo Area Carpet
	05121438AA	1	2, 6	L	11, 12, 14, 15, 16				Threshold For Partition Door
		1	3, 7	L	12, 15, 16				Threshold For Partition Door
-22									MOLDING, Cargo Area Carpet

SPRINTER (VA)

SERIES	LINE	BODY	ENGINE	TRANSMISSION
L = LOWLINE	3 = HD DODGE 2WD 6 = Lt. Duty DODGE 4WD 2 = Med. Duty DODGE 2WD 7 = Med. Duty DODGE 4WD	55 = Wagon 140" 54 = Wagon 118" 52 = Wagon 140" 51 = Wagon 118" 12 = Van 140" 11 = Van 118" 06 = Front Section 158" 14 = Van 118" 15 = Van 140" 16 = Van 158" 56 = Wagon 158" 01 = Chassis Forward Control 118" 02 = Chassis Forward Control 140"	EX8 = Engine-2.7L I5 Mercedes Turbo Diesel	DGJ = Transmission-5-Spd. Automatic,W5A580

AR = use ase required - = Non illustrrated part

Floor - Wooden
Figure IVA-330

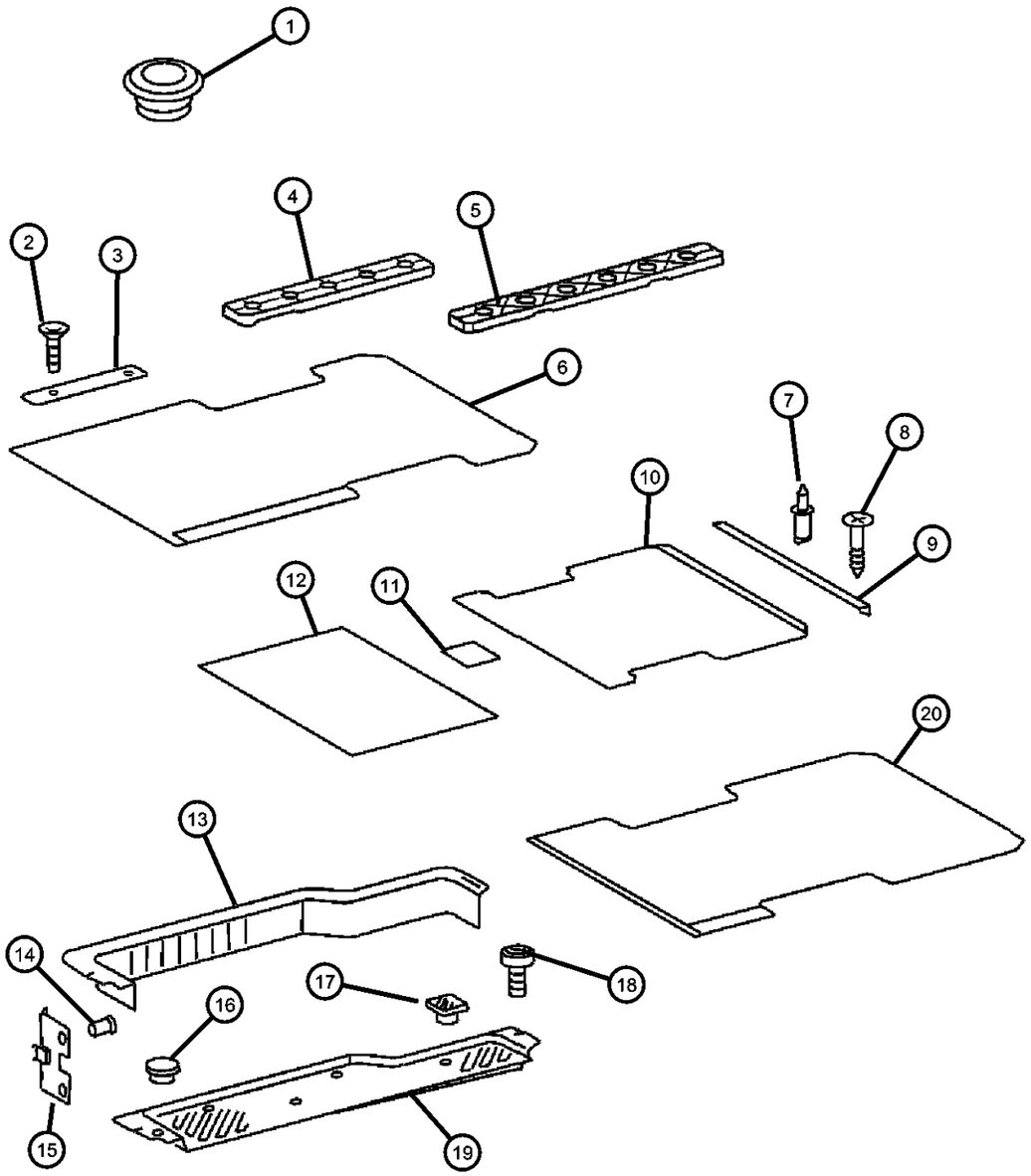

ITEM	PART NUMBER	QTY	LINE	SERIES	BODY	ENGINE	TRANS	TRIM	DESCRIPTION
	05122670AA	1	2, 6	L	11, 12, 14, 15, 16				With Sliding Doors, Right & Left
		2	2, 6	L	51, 52, 54, 55, 56				With Sliding Doors, Right & Left
		1	3, 7	L	12, 15, 16				With Sliding Doors, Right & Left
	05131522AA	1	2, 6	L	11, 12, 14, 15, 16				For (UPS)

SPRINTER (VA)

SERIES	LINE	BODY	ENGINE	TRANSMISSION
L = LOWLINE	3 = HD DODGE 2WD 6 = Lt. Duty DODGE 4WD 2 = Med. Duty DODGE 2WD 7 = Med. Duty DODGE 4WD	55 = Wagon 140" 54 = Wagon 118" 52 = Wagon 140" 51 = Wagon 118" 12 = Van 140" 11 = Van 118" 06 = Front Section 158" 14 = Van 118" 15 = Van 140" 16 = Van 158" 56 = Wagon 158" 01 = Chassis Forward Control 118" 02 = Chassis Forward Control 140"	EX8 = Engine-2.7L I5 Mercedes Turbo Diesel	DGJ = Transmission-5-Spd. Automatic,W5A580

AR = use ase required - = Non illustrrated part

Insulation - Carpet
Figure IVA-340

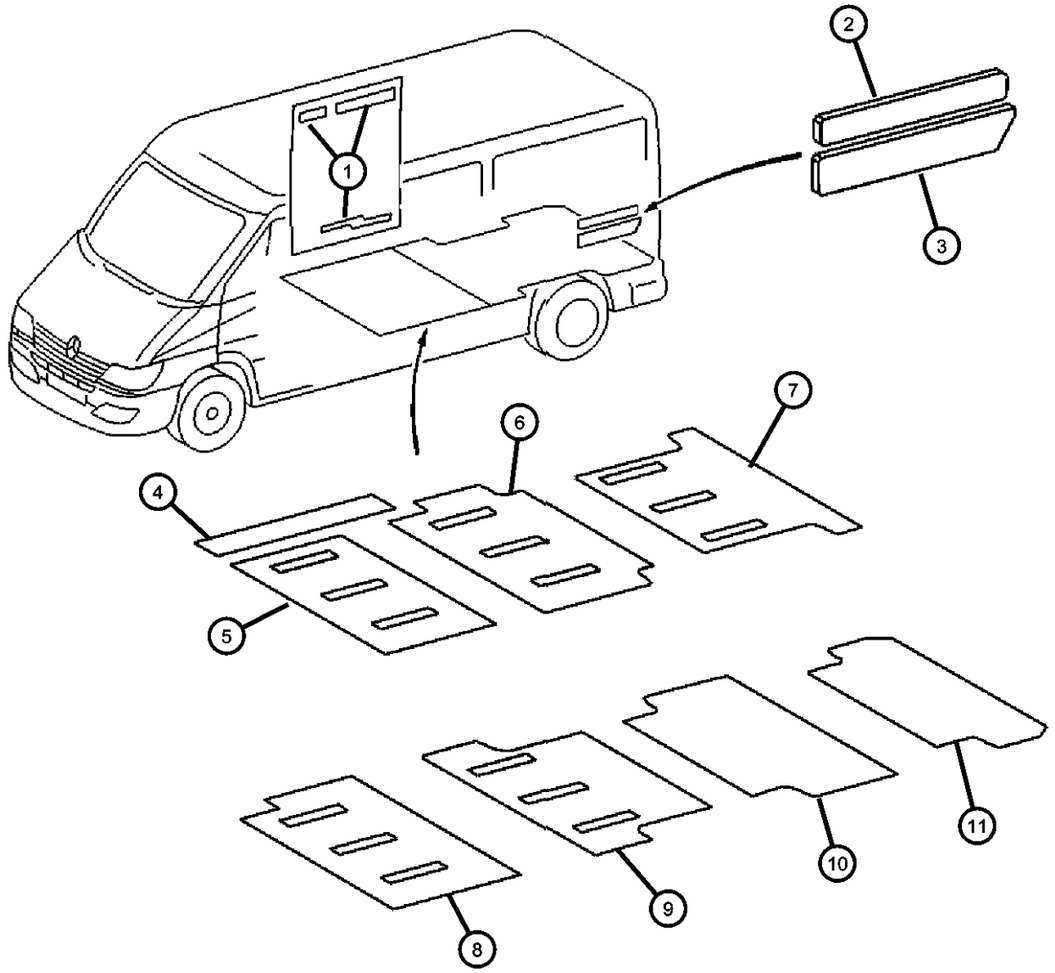

ITEM	PART NUMBER	QTY	LINE	SERIES	BODY	ENGINE	TRANS	TRIM	DESCRIPTION
1	05131522AA	1							INSULATION, NONE, SPRINTER, (NOT SERVICED),
2									INSULATION, Side Panel
	05131360AA	2	3, 7	L	12, 15, 16				
		2	2, 6	L	11, 12, 14, 15, 16				
		2	2, 6	L	51, 52, 54, 55, 56				
3									INSULATION, Side Panel
	05122497AA	1	2, 6	L	11, 12, 14, 15, 16				[910x265x20mm]
	05122504AA	1	2, 6	L	56				[910x265x20mm], Left
		1	2, 6	L	51, 54				[910x265x20mm], Left
		1	2, 6	L	51, 52, 54, 55, 56				[910x265x20mm]
		2	3, 7	L	12, 15, 16				[910x265x20mm]
		1	2, 6	L	16				[910x265x20mm], Left
		1	2, 6	L	11, 14				[910x265x20mm], Left
		1	2, 6	L	12, 15				[910x265x20mm], Left
		1	2, 6	L	52, 55				[910x265x20mm], Left
		1	3, 7	L	12, 15, 16				[910x265x20mm], Left
	05122507AA	99	2, 6	L	12, 15, 16				[910x265x20mm], Right
		1	2, 6	L	16				[910x265x20mm], Right
		1	2, 6	L	11, 14				[910x265x20mm], Right
		99	2, 6	L	52, 55, 56				[910x265x20mm], Right
		1	2, 6	L	51, 54				[910x265x20mm], Right
		1	3, 7	L	12, 15, 16				[910x265x20mm], Right
4									INSULATION, Floor
	05133560AA	1	2, 6	L	11, 12, 14, 15, 16				
		1	2, 6	L	51, 52, 54, 55, 56				

SPRINTER (VA)

SERIES	LINE	BODY	ENGINE	TRANSMISSION
L = LOWLINE	3 = HD DODGE 2WD 6 = Lt. Duty DODGE 4WD 2 = Med. Duty DODGE 2WD 7 = Med. Duty DODGE 4WD	55 = Wagon 140" 54 = Wagon 118" 52 = Wagon 140" 51 = Wagon 118" 12 = Van 140" 11 = Van 118" 06 = Front Section 158" 14 = Van 118" 15 = Van 140" 16 = Van 158" 56 = Wagon 158" 01 = Chassis Forward Control 118" 02 = Chassis Forward Control 140"	EX8 = Engine-2.7L I5 Mercedes Turbo Diesel	DGJ = Transmission-5-Spd. Automatic,W5A580

Insulation - Carpet
Figure IVA-340

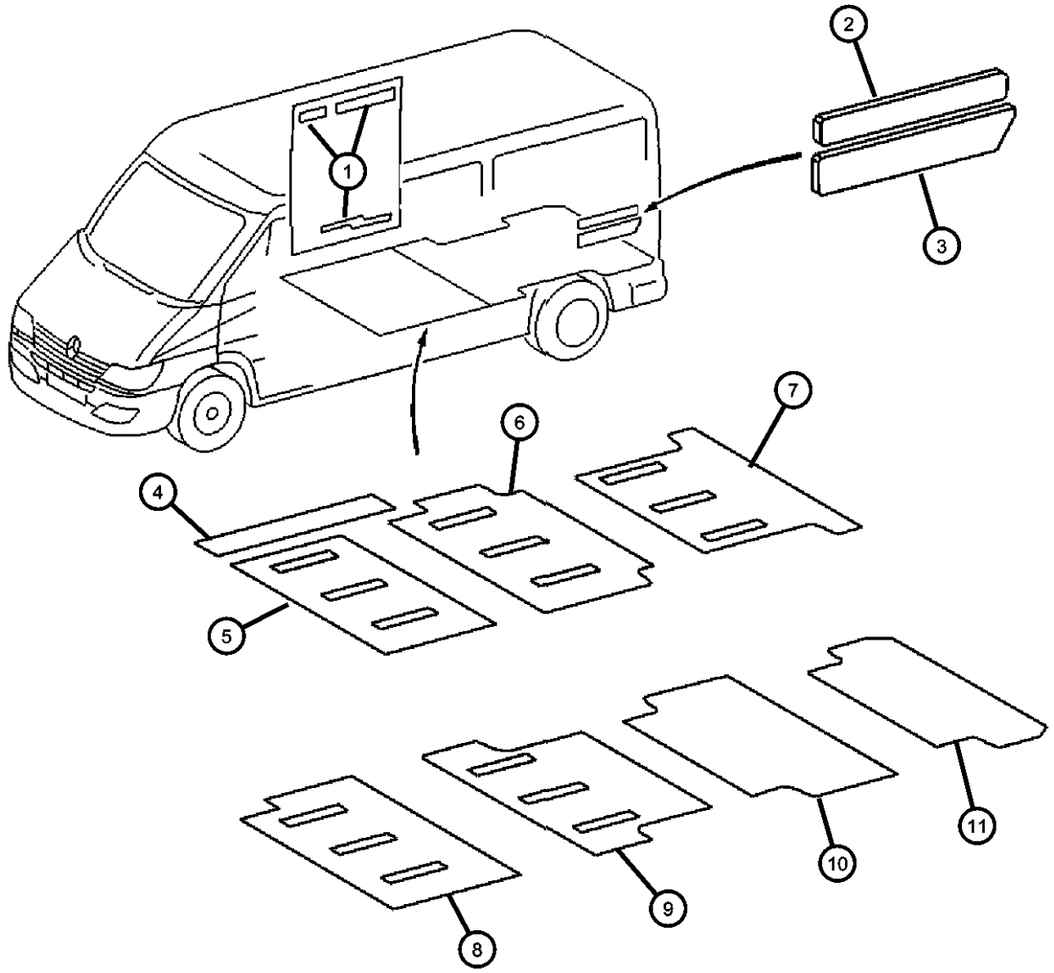

ITEM	PART NUMBER	QTY	LINE	SERIES	BODY	ENGINE	TRANS	TRIM	DESCRIPTION
		1	3, 7	L	12, 15, 16				
5									INSULATION, Floor
	05122432AA	1	2, 6	L	11, 12, 14, 15, 16				
		1	2, 6	L	51, 52, 54, 55, 56				
		1	3, 7	L	15, 16, 12				
6									INSULATION, Floor
	05122435AA	1	2, 6	L	52, 55				
		1	3, 7	L	12, 15				
		1	2, 6	L	12, 15				
7									INSULATION, Floor
	05122454AA	1	2, 6	L	12, 15				
		1	2, 6	L	52, 55				
		1	3, 7	L	15, 12				
8									INSULATION, Floor
	05122436AA	1	2, 6	L	16				
		1	2, 6	L	56				
9									INSULATION, Floor
	05122455AA	1	2, 6	L	16				
		1	2, 6	L	56				
		1	3, 7	L	16				
10									INSULATION, Floor
	05122456AA	1	2, 6	L	16				
		1	2, 6	L	56				
		1	3, 7	L	12, 15, 16				
11									INSULATION, Floor
	05122453AA	1	2, 6	L	11, 14				
		1	2, 6	L	51, 54				

SPRINTER (VA)

SERIES	LINE	BODY	ENGINE	TRANSMISSION
L = LOWLINE	3 = HD DODGE 2WD 6 = Lt. Duty DODGE 4WD 2 = Med. Duty DODGE 2WD 7 = Med. Duty DODGE 4WD	55 = Wagon 140" 54 = Wagon 118" 52 = Wagon 140" 51 = Wagon 118" 12 = Van 140" 11 = Van 118" 06 = Front Section 158" 14 = Van 118" 15 = Van 140" 16 = Van 158" 56 = Wagon 158" 01 = Chassis Forward Control 118" 02 = Chassis Forward Control 140"	EX8 = Engine-2.7L I5 Mercedes Turbo Diesel	DGJ = Transmission-5-Spd. Automatic,W5A580

Insulation Floor
Figure IVA-350

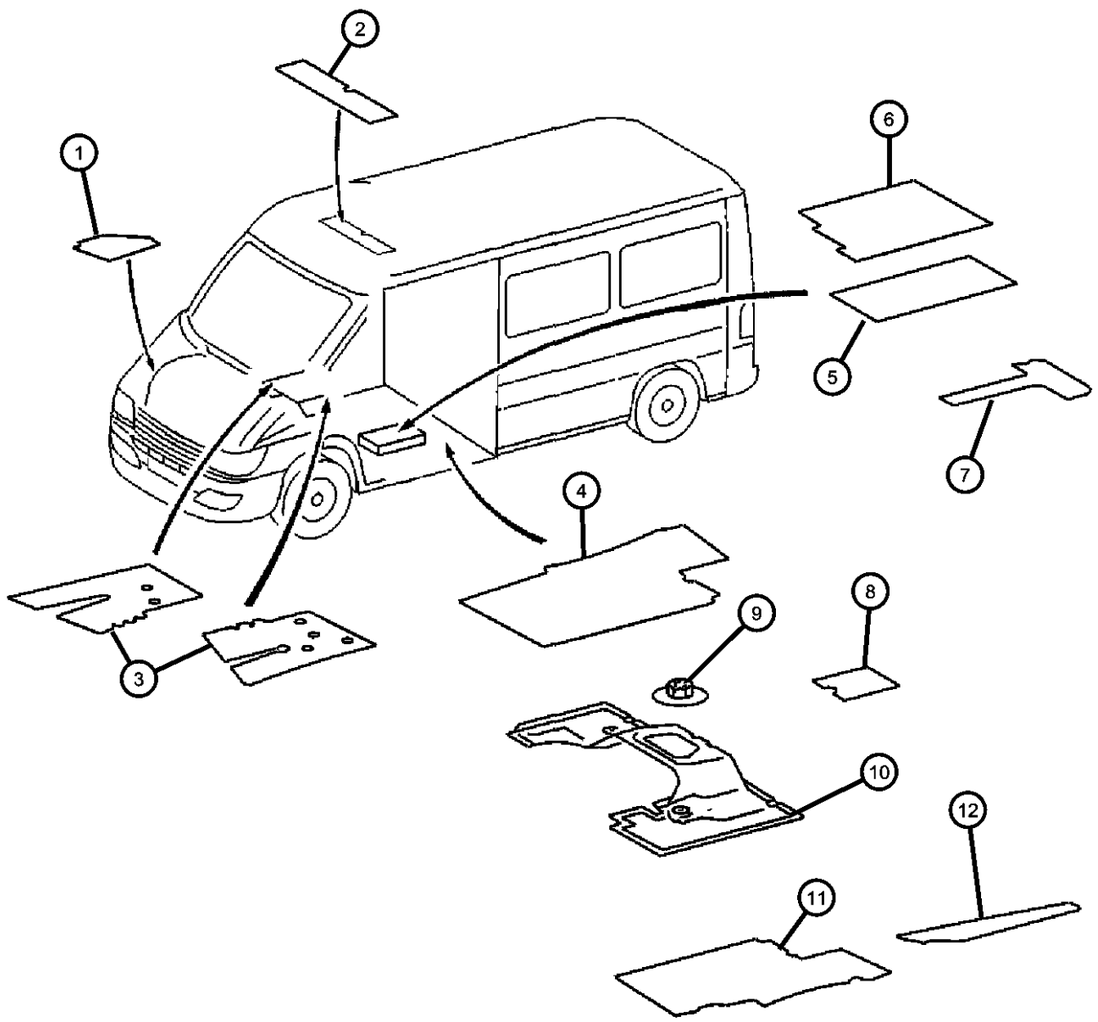

ITEM	PART NUMBER	QTY	LINE	SERIES	BODY	ENGINE	TRANS	TRIM	DESCRIPTION
1									SILENCER, Wheelhouse
	05122468AA	1	2, 6	L	11, 12, 14, 15, 16				Inside, Left
		1	2, 6	L	51, 52, 54, 55, 56				Inside, Left
		1	3, 7	L	12, 15, 16				Inside, Left
	05122469AA	1	3, 7	L	12, 15, 16				Inside, Right
		1	2, 6	L	11, 12, 14, 15, 16				Inside, Right
		1	2, 6	L	51, 52, 54, 55, 56				Inside, Right
2									INSULATION, Roof Headliner
	05122541AA	1	2, 6	L	11, 12, 14, 15, 16				
		1	2, 6	L	51, 52, 54, 55, 56				
		1	3, 7	L	12, 15, 16				
3		1							INSULATION, NONE, SPRINTER, Engine Room, (NOT SERVICED)
4									INSULATION, Floor
	05122482AA	1	2, 6	L	11, 12, 14, 15, 16				
		1	2, 6	L	51, 52, 54, 55, 56				
		1	3, 7	L	12, 15, 16				
5		1							INSULATION, NONE, SPRINTER, (NOT SERVICED)
6									INSULATION, Floor
	05122535AA	1	2, 6	L	51, 52, 54, 55, 56				
		1	3, 7	L	12, 15, 16				
		1	2, 6	L	11, 12, 14, 15, 16				
7									INSULATION, Floor
	05122471AA	1	2, 6	L	11, 12, 14, 15, 16				

SPRINTER (VA)

SERIES	LINE	BODY	ENGINE	TRANSMISSION
L = LOWLINE	3 = HD DODGE 2WD 6 = Lt. Duty DODGE 4WD 2 = Med. Duty DODGE 2WD 7 = Med. Duty DODGE 4WD	55 = Wagon 140" 54 = Wagon 118" 52 = Wagon 140" 51 = Wagon 118" 12 = Van 140" 11 = Van 118" 06 = Front Section 158" 14 = Van 118" 15 = Van 140" 16 = Van 158" 56 = Wagon 158" 01 = Chassis Forward Control 118" 02 = Chassis Forward Control 140"	EX8 = Engine-2.7L I5 Mercedes Turbo Diesel	DGJ = Transmission-5-Spd. Automatic,W5A580

Insulation Floor
Figure IVA-350

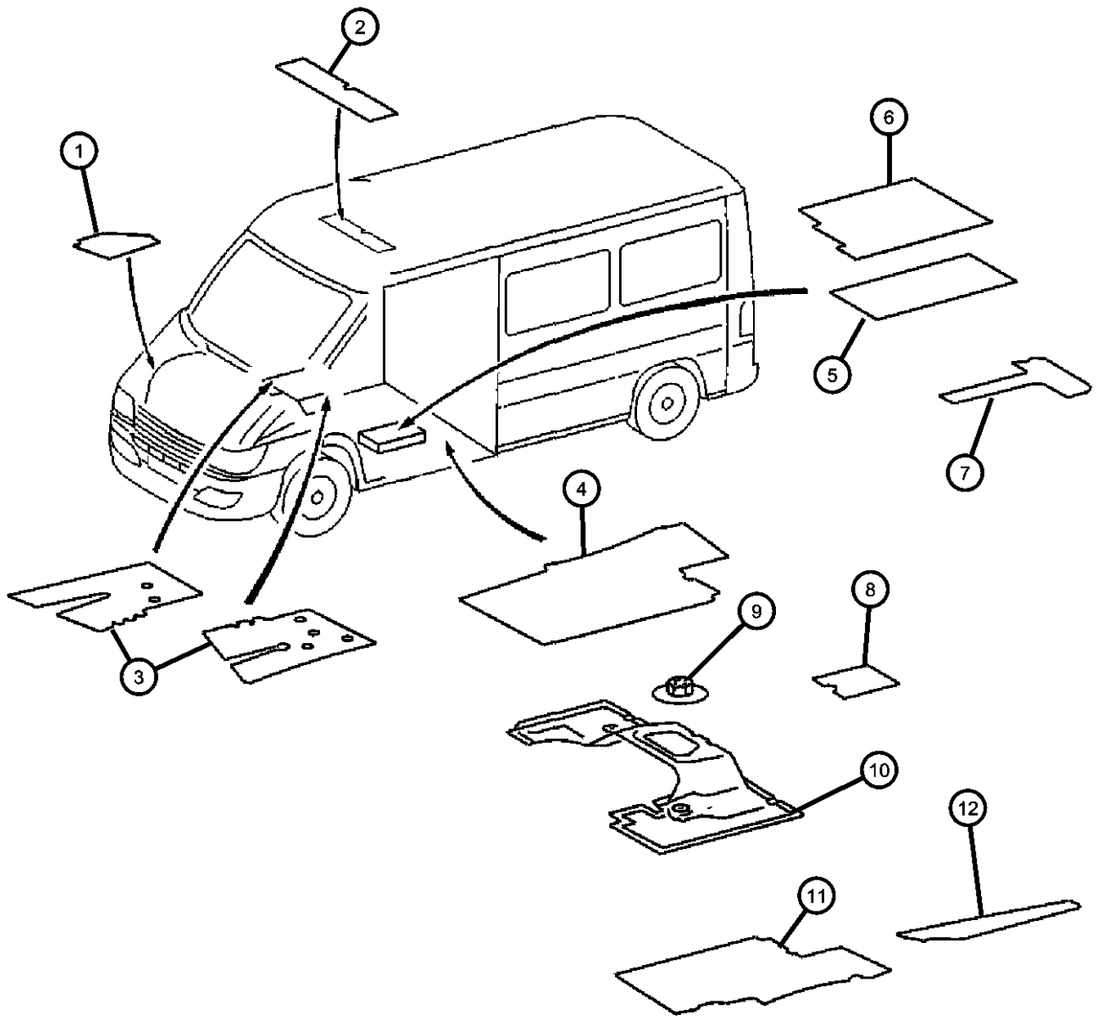

ITEM	PART NUMBER	QTY	LINE	SERIES	BODY	ENGINE	TRANS	TRIM	DESCRIPTION
		1	2, 6	L	51, 52, 54, 55, 56				
		1	3, 7	L	12, 15, 16				
8									INSULATION, Floor
	05122473AA	2	2, 6	L	56, 51, 52, 54, 55				
		2	3, 7	L	12, 15, 16				
		2	2, 6	L	11, 12, 14, 15, 16				
9									FASTENER, Buttonhead
	05125593AA	1	2, 6	L	11, 12, 14, 15, 16				
		1	2, 6	L	51, 52, 54, 55, 56				
		1	3, 7	L	12, 15, 16				
10									INSULATION, Floor
	05122476AA	1	2, 6	L	11, 12, 14, 15, 16				
		1	2, 6	L	51, 52, 54, 55, 56				
		1	3, 7	L	12, 15, 16				
11									INSULATION, Floor
	05122478AA	1	2, 6	L	11, 12, 14, 15, 16				
		1	2, 6	L	51, 52, 54, 55, 56				
		1	3, 7	L	12, 15, 16				
12									INSULATION, Floor
	05122466AA	1	2, 6	L	11, 12, 14, 15, 16				
		1	6, 2	L	51, 52, 54, 55, 56				
		1	3, 7	L	12, 15, 16				
-13									INSULATION, Floor

SPRINTER (VA)

SERIES	LINE	BODY	ENGINE	TRANSMISSION
L = LOWLINE	3 = HD DODGE 2WD 6 = Lt. Duty DODGE 4WD 2 = Med. Duty DODGE 2WD 7 = Med. Duty DODGE 4WD	55 = Wagon 140" 54 = Wagon 118" 52 = Wagon 140" 51 = Wagon 118" 12 = Van 140" 11 = Van 118" 06 = Front Section 158" 14 = Van 118" 15 = Van 140" 16 = Van 158" 56 = Wagon 158" 01 = Chassis Forward Control 118" 02 = Chassis Forward Control 140"	EX8 = Engine-2.7L I5 Mercedes Turbo Diesel	DGJ = Transmission-5-Spd. Automatic,W5A580

AR = use ase required - = Non illustrrated part

Insulation Floor
Figure IVA-350

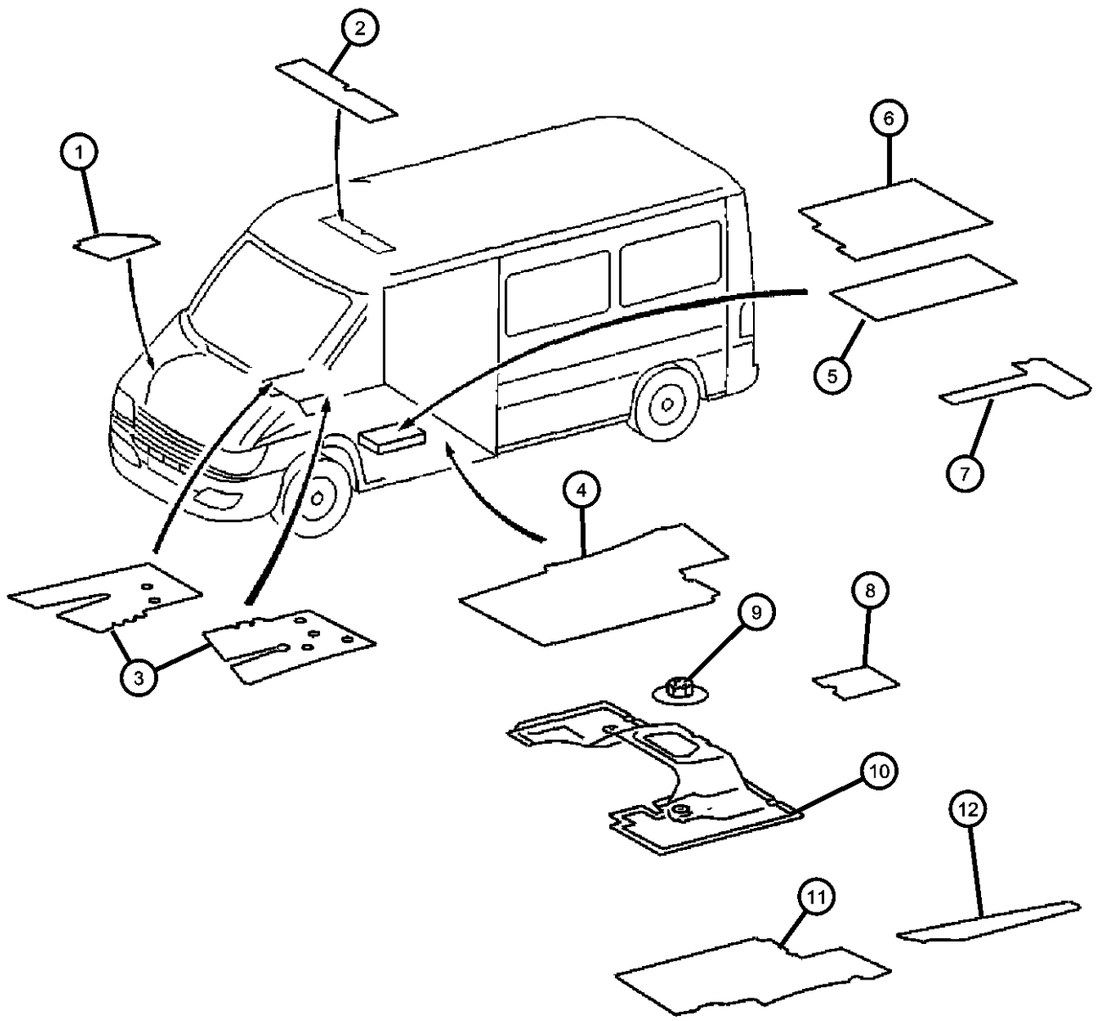

ITEM	PART NUMBER	QTY	LINE	SERIES	BODY	ENGINE	TRANS	TRIM	DESCRIPTION
	05122467AA	1	2, 6	L	11, 12, 14, 15, 16				Entrance, Inside, Right
		1	2, 6	L	51, 52, 54, 55, 56				Entrance, Inside, Right
		1	3, 7	L	12, 15, 16				Entrance, Inside, Right
-14									INSULATION, Floor
	05122470AA	1	2, 6	L	11, 12, 14, 15, 16				Seat Box, Right
		1	2, 6	L	51, 52, 54, 55, 56				Seat Box, Right
		1	3, 7	L	12, 15, 16				Seat Box, Right

SPRINTER (VA)

SERIES	LINE	BODY	ENGINE	TRANSMISSION
L = LOWLINE	3 = HD DODGE 2WD 6 = Lt. Duty DODGE 4WD 2 = Med. Duty DODGE 2WD 7 = Med. Duty DODGE 4WD	55 = Wagon 140" 54 = Wagon 118" 52 = Wagon 140" 51 = Wagon 118" 12 = Van 140" 11 = Van 118" 06 = Front Section 158" 14 = Van 118" 15 = Van 140" 16 = Van 158" 56 = Wagon 158" 01 = Chassis Forward Control 118" 02 = Chassis Forward Control 140"	EX8 = Engine-2.7L I5 Mercedes Turbo Diesel	DGJ = Transmission-5-Spd. Automatic,W5A580

Front Door Trim
Figure IVA-410

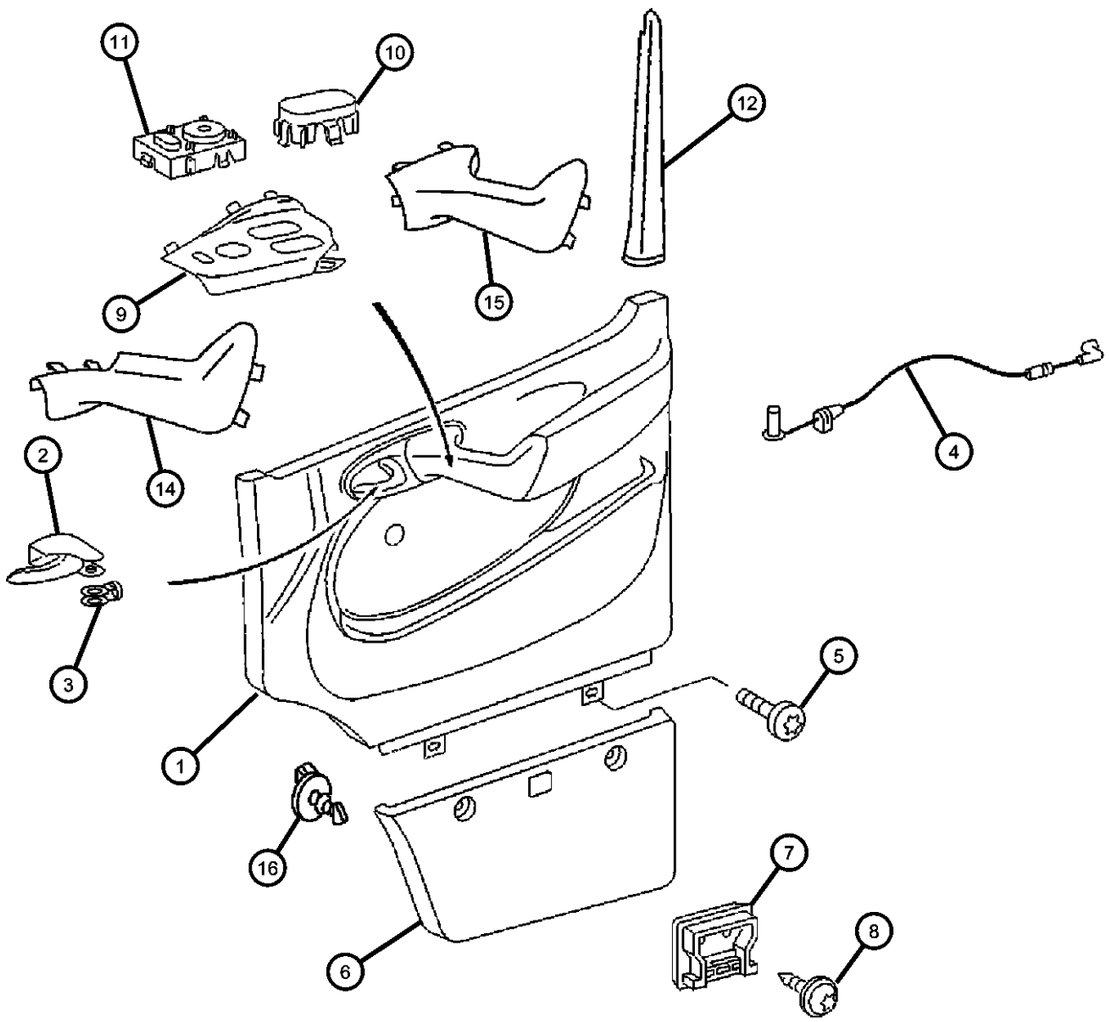

ITEM	PART NUMBER	QTY	LINE	SERIES	BODY	ENGINE	TRANS	TRIM	DESCRIPTION
1									PANEL, Front Door Trim
	05104344AA	1	3, 7	L	12, 15, 16				Without [JPA] Electric Windows, Right
	05123742AA	1	2, 6	L	01, 02, 06				With [JPA] Electric Windows, Left
	05104340AA	1	2, 6	L	01, 02, 06				Without [JPA] Electric Windows, Left
		1	2, 6	L	11, 12, 14, 15, 16				Without [JPA] Electric Windows, Left
		1	2, 6	L	55, 56, 51, 52, 54				Without [JPA] Electric Windows, Left
		1	3, 7	L	02, 06				Without [JPA] Electric Windows, Left
		1	3, 7	L	12, 15, 16				Without [JPA] Electric Windows, Left
		1	2, 6	L	01, 02, 06				Without [JPA] Electric Windows, Right
		1	2, 6	L	11, 12, 14, 15, 16				Without [JPA] Electric Windows, Right
		1	2, 6	L	51, 52, 54, 55, 56				Without [JPA] Electric Windows, Right
		1	3, 7	L	02, 06				Without [JPA] Electric Windows, Right
		1	2, 6	L	11, 12, 14, 15, 16				With [JPA] Electric Windows, Left
		1	2, 6	L	51, 52, 54, 55, 56				With [JPA] Electric Windows, Left
		1	3, 7	L	12, 15, 16				With [JPA] Electric Windows, Left
	05123747AA	1	2, 6	L	01, 02, 06				With [JPA] Electric Windows, Right
		1	2, 6	L	12, 14, 15, 16, 11				With [JPA] Electric Windows, Right
		1	2, 6	L	51, 52, 54, 55, 56				With [JPA] Electric Windows, Right
		1	3, 7	L	12, 15, 16				With [JPA] Electric Windows, Right
2									HANDLE, Door Interior
	05133515AA	1	2, 6	L	01, 02, 06				Right

SPRINTER (VA)

SERIES	LINE	BODY	ENGINE	TRANSMISSION
L = LOWLINE	3 = HD DODGE 2WD 6 = Lt. Duty DODGE 4WD 2 = Med. Duty DODGE 2WD 7 = Med. Duty DODGE 4WD	55 = Wagon 140" 54 = Wagon 118" 52 = Wagon 140" 51 = Wagon 118" 12 = Van 140" 11 = Van 118" 06 = Front Section 158" 14 = Van 118" 15 = Van 140" 16 = Van 158" 56 = Wagon 158" 01 = Chassis Forward Control 118" 02 = Chassis Forward Control 140"	EX8 = Engine-2.7L I5 Mercedes Turbo Diesel	DGJ = Transmission-5-Spd. Automatic,W5A580

Front Door Trim
Figure IVA-410

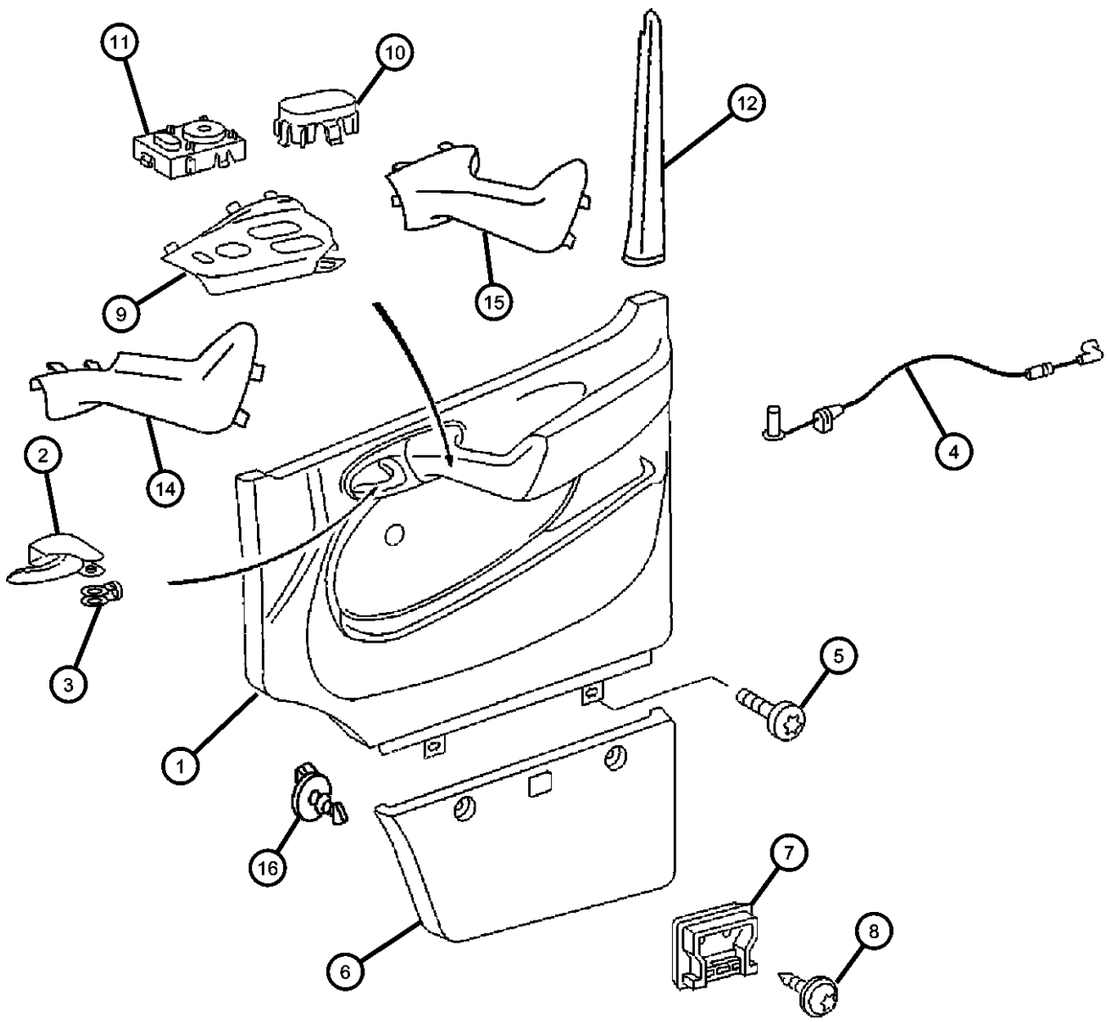

ITEM	PART NUMBER	QTY	LINE	SERIES	BODY	ENGINE	TRANS	TRIM	DESCRIPTION
		1	2, 6	L	11, 12, 14, 15, 16				Right
		1	2, 6	L	51, 52, 54, 55, 56				Right
		1	3, 7	L	12, 15, 16				Right
	05133988AA	1	2, 6	L	01, 02, 06				Left
		1	2, 6	L	11, 12, 14, 15, 16				Left
		1	2, 6	L	51, 52, 54, 55, 56				Left
		1	3, 7	L	12, 15, 16				Left
3									CLIP, Door Trim
	05133516AA	1	2, 6	L	01, 02, 06				Right
		1	2, 6	L	11, 12, 14, 15, 16				Right
		1	2, 6	L	51, 52, 54, 55, 56				Right
		1	3, 7	L	12, 15, 16				Right
	05133989AA	1	2, 6	L	01, 02, 06				Left
		1	2, 6	L	51, 52, 54, 55, 56				Left
		1	3, 7	L	12, 15, 16				Left
		1	2, 6	L	11, 12, 14, 15, 16				Left
4									LINK, Door Latch
	05124068AA	1	2, 6	L	01, 02, 06				Left
		1	2, 6	L	11, 12, 14, 15, 16				Left
		1	2, 6	L	51, 52, 54, 55, 56				Left
		1	3, 7	L	12, 15, 16				Left
	05124069AA	1	2, 6	L	01, 02, 06				Right
		1	2, 6	L	11, 12, 14, 15, 16				Right

SPRINTER (VA)

SERIES	LINE	BODY	ENGINE	TRANSMISSION
L = LOWLINE	3 = HD DODGE 2WD 6 = Lt. Duty DODGE 4WD 2 = Med. Duty DODGE 2WD 7 = Med. Duty DODGE 4WD	55 = Wagon 140" 54 = Wagon 118" 52 = Wagon 140" 51 = Wagon 118" 12 = Van 140" 11 = Van 118" 06 = Front Section 158" 14 = Van 118" 15 = Van 140" 16 = Van 158" 56 = Wagon 158" 01 = Chassis Forward Control 118" 02 = Chassis Forward Control 140"	EX8 = Engine-2.7L I5 Mercedes Turbo Diesel	DGJ = Transmission-5-Spd. Automatic,W5A580

Front Door Trim
Figure IVA-410

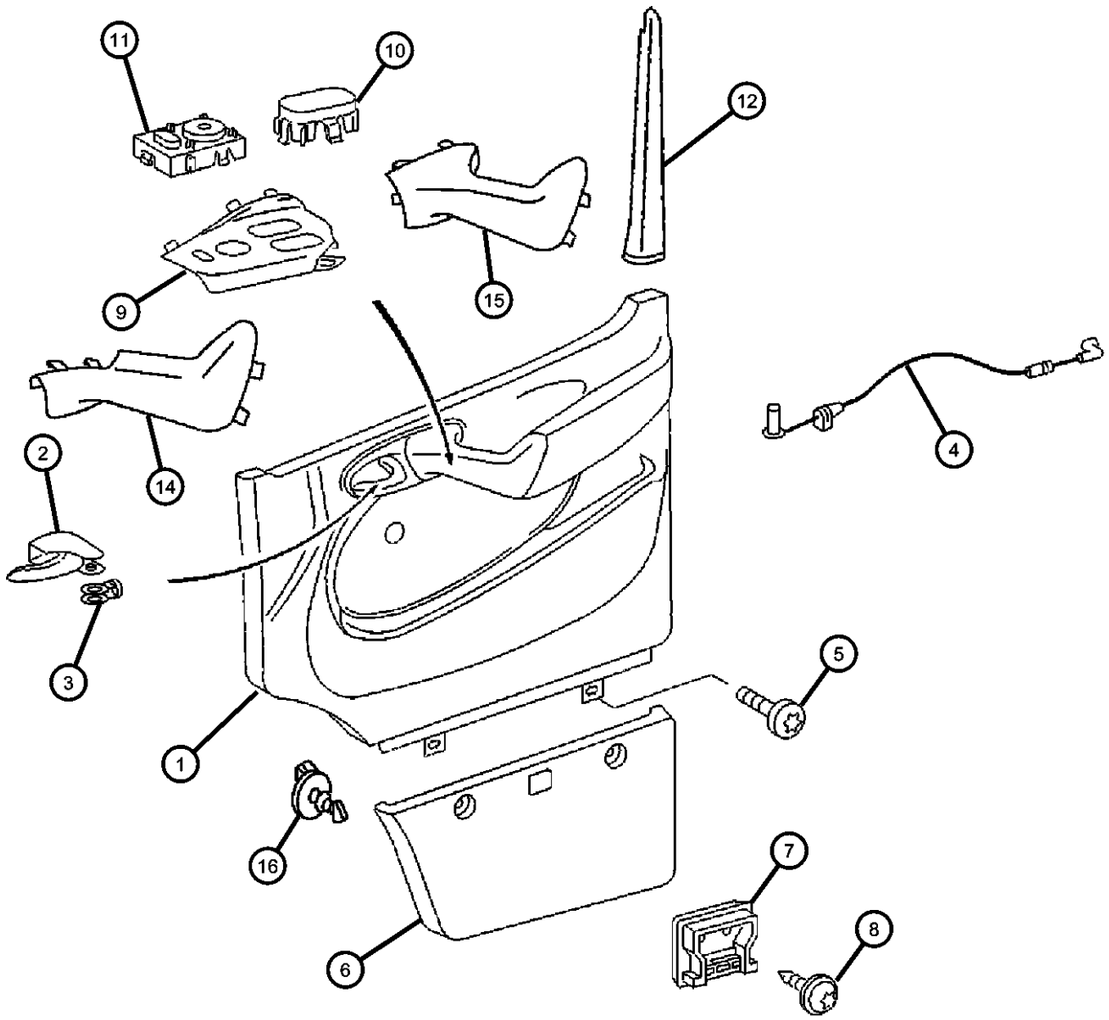

ITEM	PART NUMBER	QTY	LINE	SERIES	BODY	ENGINE	TRANS	TRIM	DESCRIPTION
		1	2, 6	L	51, 52, 54, 55, 56				Right
		1	3, 7	L	12, 15, 16				Right
5									SCREW
	06104142AA	2	2, 6	L	11, 12, 14, 15, 16				
		2	3, 7	L	12, 15, 16				
		2	2, 6	L	51, 52, 54, 55, 56				
6									COVER, Door Panel
	05104325AA	1	2, 6	L	51, 52, 54, 55, 56				Left
		1	3, 7	L	12, 15, 16				Left
	05114499AA	1							Right
		1	2, 6	L	11, 12, 14, 15, 16				Left
7									BEZEL, Door Trim Panel
	05123763AA	2	2, 6	L	11, 12, 14, 15, 16				
		2	2, 6	L	51, 52, 54, 55, 56				
		2	3, 7	L	12, 15, 16				
8									SCREW
	06104567AA	4	2, 6	L	11, 12, 14, 15, 16				
		4	2, 6	L	51, 52, 54, 55, 56				
		4	3, 7	L	12, 15, 16				
9									BEZEL, Power Window/Door Lock Switch
	05123790AA	1	2, 6	L	01, 02, 06				Left
		1	2, 6	L	11, 12, 14, 15, 16				Left
	05123791AA	1	2, 6	L	15, 16, 11, 12, 14				Right

SPRINTER (VA)

SERIES	LINE	BODY	ENGINE	TRANSMISSION
L = LOWLINE	3 = HD DODGE 2WD 6 = Lt. Duty DODGE 4WD 2 = Med. Duty DODGE 2WD 7 = Med. Duty DODGE 4WD	55 = Wagon 140" 54 = Wagon 118" 52 = Wagon 140" 51 = Wagon 118" 12 = Van 140" 11 = Van 118" 06 = Front Section 158" 14 = Van 118" 15 = Van 140" 16 = Van 158" 56 = Wagon 158" 01 = Chassis Forward Control 118" 02 = Chassis Forward Control 140"	EX8 = Engine-2.7L I5 Mercedes Turbo Diesel	DGJ = Transmission-5-Spd. Automatic,W5A580

Front Door Trim
Figure IVA-410

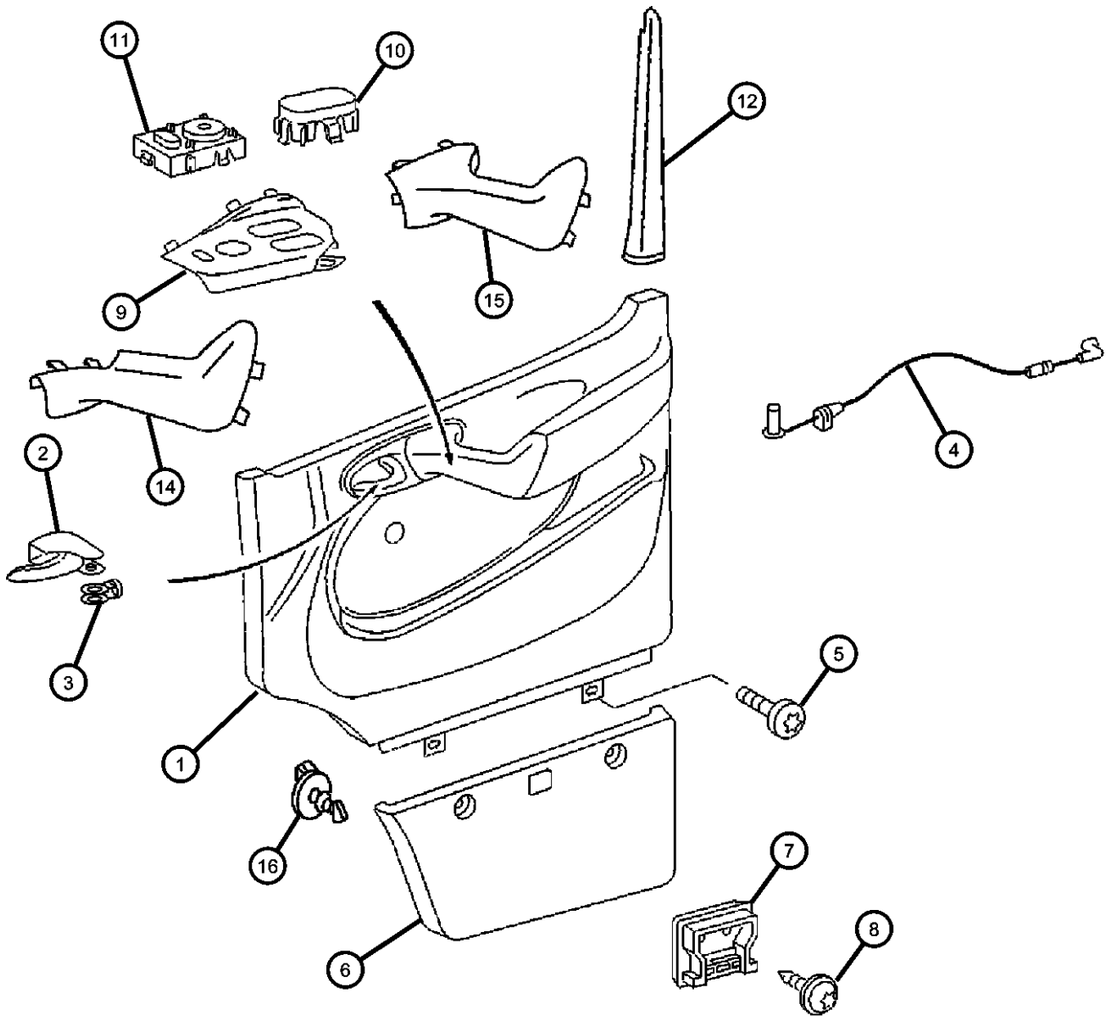

ITEM	PART NUMBER	QTY	LINE	SERIES	BODY	ENGINE	TRANS	TRIM	DESCRIPTION
		1	2, 6	L	51, 52, 54, 55, 56				Right
		1	2, 6	L	51, 52, 54, 55, 56				Left
		1	3, 7	L	12, 15, 16				Left
		1	2, 6	L	01, 02, 06				Right
		1	3, 7	L	12, 15, 16				Right
10									COVER, Switch
	05104354AA	2	3, 7	L	12, 15, 16				
		2	2, 6	L	01, 02, 06				
		2	2, 6	L	11, 12, 14, 15, 16				
		2	2, 6	L	51, 52, 54, 55, 56				
11									SWITCH, Mirror
	05103845AA	1	2, 6	L	01, 02, 06				
		1	2, 6	L	11, 12, 14, 15, 16				
		1	2, 6	L	51, 52, 54, 55, 56				
		1	3, 7	L	02, 06				
12									MOLDING, Front Door Closeout
	05104322AA	1	3, 7	L	12, 15, 16				Left
		1	2, 6	L	01, 02, 06				Left
		1	2, 6	L	11, 12, 14, 15, 16				Left
		1	2, 6	L	51, 52, 54, 55, 56				Left
	05123738AA	1	2, 6	L	01, 02, 06				Right
		1	2, 6	L	11, 14, 15, 12, 16				Right
		1	2, 6	L	54, 55, 56, 51, 52				Right

SPRINTER (VA)

SERIES	LINE	BODY	ENGINE	TRANSMISSION
L = LOWLINE	3 = HD DODGE 2WD 6 = Lt. Duty DODGE 4WD 2 = Med. Duty DODGE 2WD 7 = Med. Duty DODGE 4WD	55 = Wagon 140" 54 = Wagon 118" 52 = Wagon 140" 51 = Wagon 118" 12 = Van 140" 11 = Van 118" 06 = Front Section 158" 14 = Van 118" 15 = Van 140" 16 = Van 158" 56 = Wagon 158" 01 = Chassis Forward Control 118" 02 = Chassis Forward Control 140"	EX8 = Engine-2.7L I5 Mercedes Turbo Diesel	DGJ = Transmission-5-Spd. Automatic,W5A580

AR = use ase required - = Non illustrrated part

Front Door Trim
Figure IVA-410

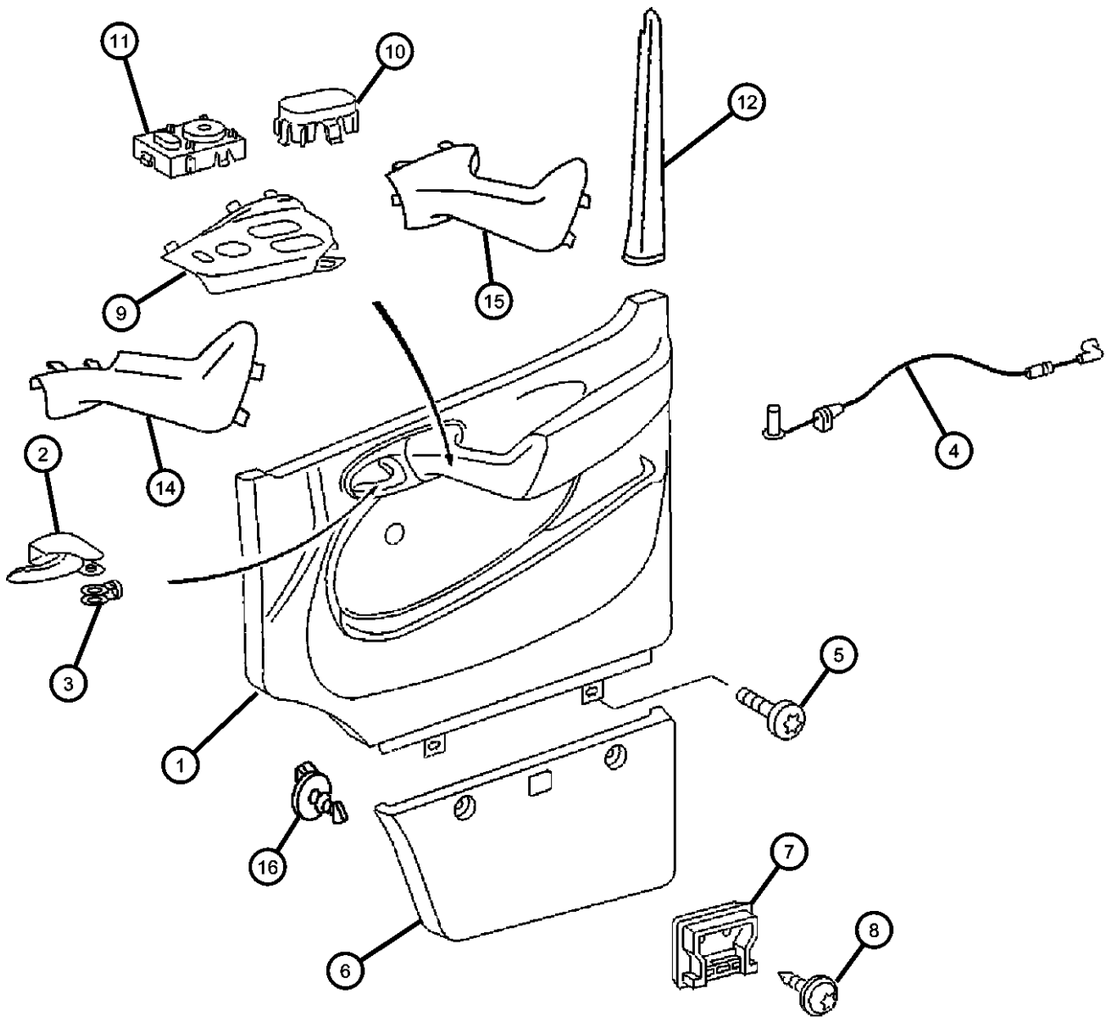

ITEM	PART NUMBER	QTY	LINE	SERIES	BODY	ENGINE	TRANS	TRIM	DESCRIPTION
		1	3, 7	L	12, 15, 16				Right
-13									CLIP, Trim
	06104897AA	6	2, 6	L	01, 02, 06				
		6	2, 6	L	11, 12, 14, 15, 16				
		6	2, 6	L	51, 52, 54, 55, 56				
		6	7, 3	L	12, 15, 16				
14									HANDLE, Door Interior
	05123788AA	1	2, 6	L	01, 02, 06				With [JPA] Power Heated Mirrors, Left
		1	2, 6	L	11, 12, 14, 15, 16				With [JPA] Power Heated Mirrors, Left
		1	2, 6	L	51, 52, 54, 55, 56				With [JPA] Power Heated Mirrors, Left
		1	3, 7	L	02, 06				With [JPA] Power Heated Mirrors, Left
		1	3, 7	L	12, 15, 16				With [JPA] Power Heated Mirrors, Left
	05123789AA	1	2, 6	L	01, 02, 06				With [JPA] Power Heated Mirrors, Right
		1	2, 6	L	11, 12, 14, 15, 16				With [JPA] Power Heated Mirrors, Right
		1	2, 6	L	51, 52, 54, 55, 56				With [JPA] Power Heated Mirrors, Right
		1	3, 7	L	02, 06				With [JPA] Power Heated Mirrors, Right
		1	3, 7	L	12, 15, 16				With [JPA] Power Heated Mirrors, Right
15									HANDLE, Door Interior
	05123786AA	1	2, 6	L	06, 01, 02				Without [JPA] Power Heated Mirrors, Left
		1	2, 6	L	11, 12, 14, 15, 16				Without [JPA] Power Heated Mirrors, Left
		1	2, 6	L	51, 52, 54, 55, 56				Without [JPA] Power Heated Mirrors, Left

SPRINTER (VA)

SERIES	LINE	BODY	ENGINE	TRANSMISSION
L = LOWLINE	3 = HD DODGE 2WD 6 = Lt. Duty DODGE 4WD 2 = Med. Duty DODGE 2WD 7 = Med. Duty DODGE 4WD	55 = Wagon 140" 54 = Wagon 118" 52 = Wagon 140" 51 = Wagon 118" 12 = Van 140" 11 = Van 118" 06 = Front Section 158" 14 = Van 118" 15 = Van 140" 16 = Van 158" 56 = Wagon 158" 01 = Chassis Forward Control 118" 02 = Chassis Forward Control 140"	EX8 = Engine-2.7L I5 Mercedes Turbo Diesel	DGJ = Transmission-5-Spd. Automatic,W5A580

Front Door Trim
Figure IVA-410

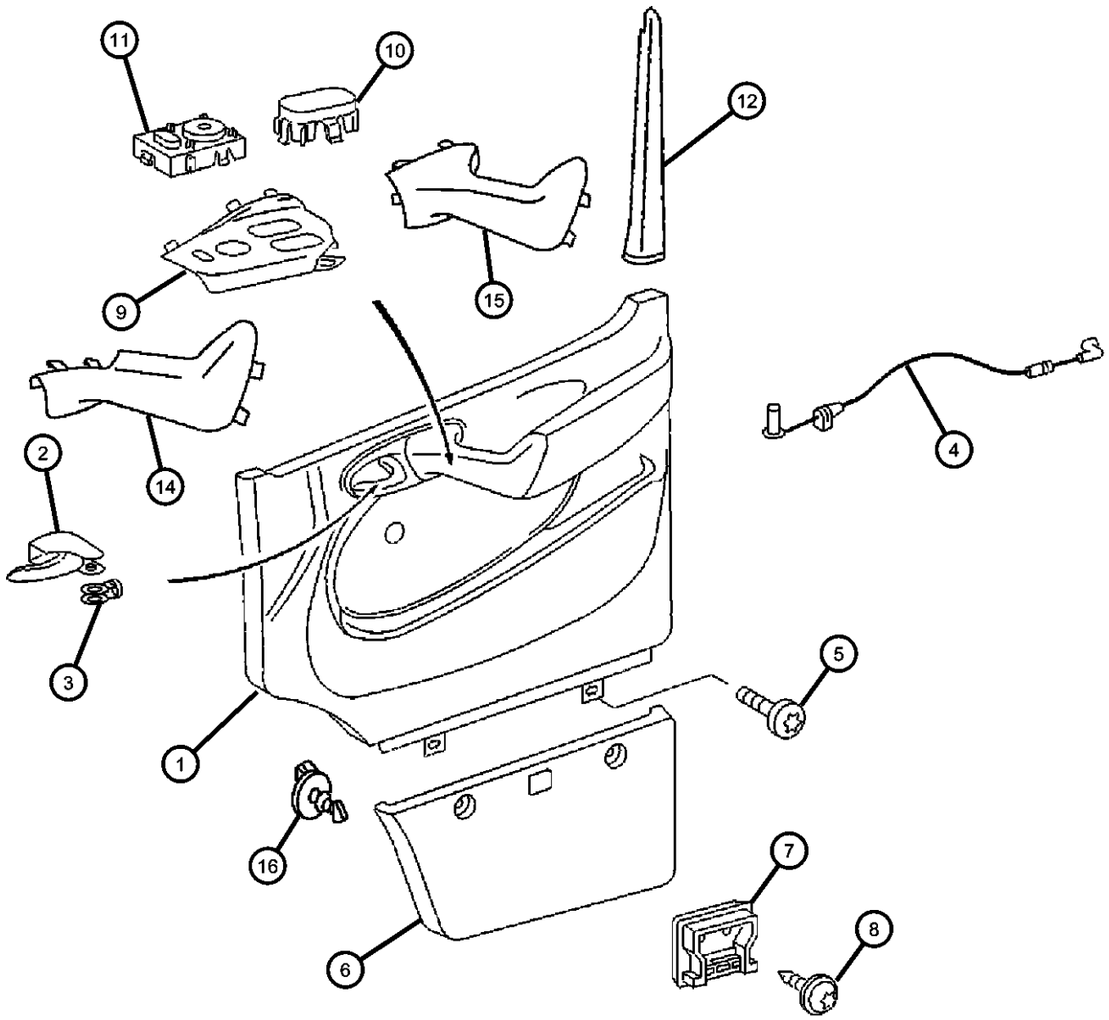

ITEM	PART NUMBER	QTY	LINE	SERIES	BODY	ENGINE	TRANS	TRIM	DESCRIPTION
		1	3, 7	L	02, 06				Without [JPA] Power Heated Mirrors, Left
		1	3, 7	L	12, 15, 16				Without [JPA] Power Heated Mirrors, Left
	05123787AA	1	2, 6	L	51, 52, 54, 55, 56				Without [JPA] Power Heated Mirrors, Right
		1	3, 7	L	02, 06				Without [JPA] Power Heated Mirrors, Right
		1	3, 7	L	12, 15, 16				Without [JPA] Power Heated Mirrors, Right
		1	2, 6	L	01, 02, 06				Without [JPA] Power Heated Mirrors, Right
		1	2, 6	L	11, 12, 14, 15, 16				Without [JPA] Power Heated Mirrors, Right
16									RETAINER, Trim Panel
	05133517AA	1	2, 6	L	11, 12, 14, 15, 16				
		1	2, 6	L	51, 52, 54, 55, 56				
		1	3, 7	L	16, 12, 15				

SPRINTER (VA)

SERIES	LINE	BODY	ENGINE	TRANSMISSION
L = LOWLINE	3 = HD DODGE 2WD 6 = Lt. Duty DODGE 4WD 2 = Med. Duty DODGE 2WD 7 = Med. Duty DODGE 4WD	55 = Wagon 140" 54 = Wagon 118" 52 = Wagon 140" 51 = Wagon 118" 12 = Van 140" 11 = Van 118" 06 = Front Section 158" 14 = Van 118" 15 = Van 140" 16 = Van 158" 56 = Wagon 158" 01 = Chassis Forward Control 118" 02 = Chassis Forward Control 140"	EX8 = Engine-2.7L I5 Mercedes Turbo Diesel	DGJ = Transmission-5-Spd. Automatic,W5A580

Sliding Door Trim
Figure IVA-420

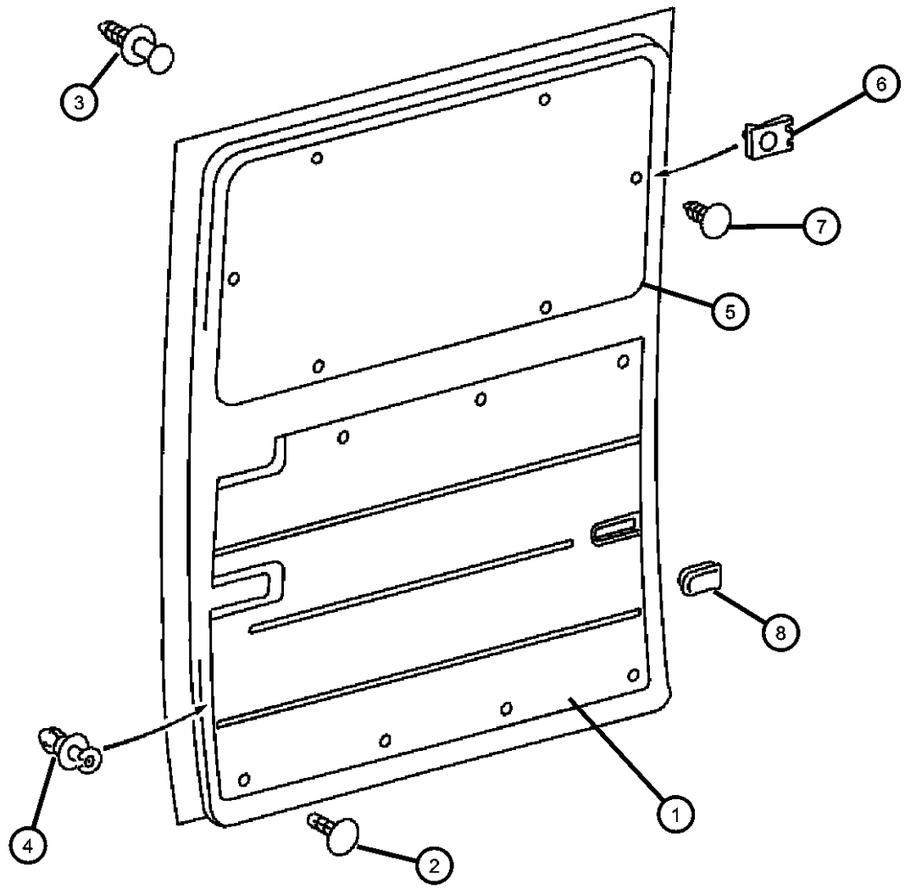

ITEM	PART NUMBER	QTY	LINE	SERIES	BODY	ENGINE	TRANS	TRIM	DESCRIPTION
Sales Codes:									
[4UW] = Interior Paneling Luxury									
[CMF] = Cargo Panels									
[GKA] = Right Sliding Door									
[GKE] = Left Sliding Door									
[GKG] = High Clearance									
1									PANEL, Sliding Door Trim
	05104367AA	1	3, 7	L	12, 15, 16				With [GKA] Sliding Right Door and [CMF] Cargo Panels
	05123841AA	1	2, 6	L	11, 12, 14, 15, 16				With [GKE] Sliding Left Door and [4UW] Interior Paneling Luxury
		1	2, 6	L	51, 52, 54, 55, 56				With [GKE] Sliding Left Door and [4UW] Interior Paneling Luxury
		1	3, 7	L	12, 15, 16				With [GKE] Sliding Left Door and [4UW] Interior Paneling Luxury
	05104366AA	1	2, 6	L	11, 12, 14, 15, 16				With [GKA] Sliding Right Door
		1	2, 6	L	51, 52, 54, 55, 56				With [GKA] Sliding Right Door
		1	3, 7	L	12, 15, 16				With [GKA] Sliding Right Door
		1	2, 6	L	11, 12, 14, 15, 16				With [GKA] Sliding Right Door and [CMF] Cargo Panels
	05123881AA	1	3, 7	L	12, 15, 16				With [GKE] Sliding Left Door and [CTE] Washable Wall
	05123882AA	1	2, 6	L	11, 12, 14, 15, 16				With [GKA] Sliding Right Door and [CTE] Washable Wall
	05123845AA	1	2, 6	L	11, 12, 14, 15, 16				With [GKA] Sliding Right Door and [4UW] Interior Paneling Luxury
		1	2, 6	L	52, 54, 55, 56, 51				With [GKA] Sliding Right Door and [4UW] Interior Paneling Luxury
		1	3, 7	L	12, 15, 16				With [GKA] Sliding Right Door and [4UW] Interior Paneling Luxury
	05123875AA	1	2, 6	L	11, 12, 14, 15, 16				With [GKE] Sliding Left Door and [CMF] Full Laminated Wood
		1	3, 7	L	12, 15, 16				With [GKE] Sliding Left Door and [CMF] Full Laminated Wood

SPRINTER (VA)

SERIES	LINE	BODY	ENGINE	TRANSMISSION
L = LOWLINE	3 = HD DODGE 2WD 6 = Lt. Duty DODGE 4WD 2 = Med. Duty DODGE 2WD 7 = Med. Duty DODGE 4WD	55 = Wagon 140" 54 = Wagon 118" 52 = Wagon 140" 51 = Wagon 118" 12 = Van 140" 11 = Van 118" 06 = Front Section 158" 14 = Van 118" 15 = Van 140" 16 = Van 158" 56 = Wagon 158" 01 = Chassis Forward Control 118" 02 = Chassis Forward Control 140"	EX8 = Engine-2.7L I5 Mercedes Turbo Diesel	DGJ = Transmission-5-Spd. Automatic,W5A580

Sliding Door Trim
Figure IVA-420

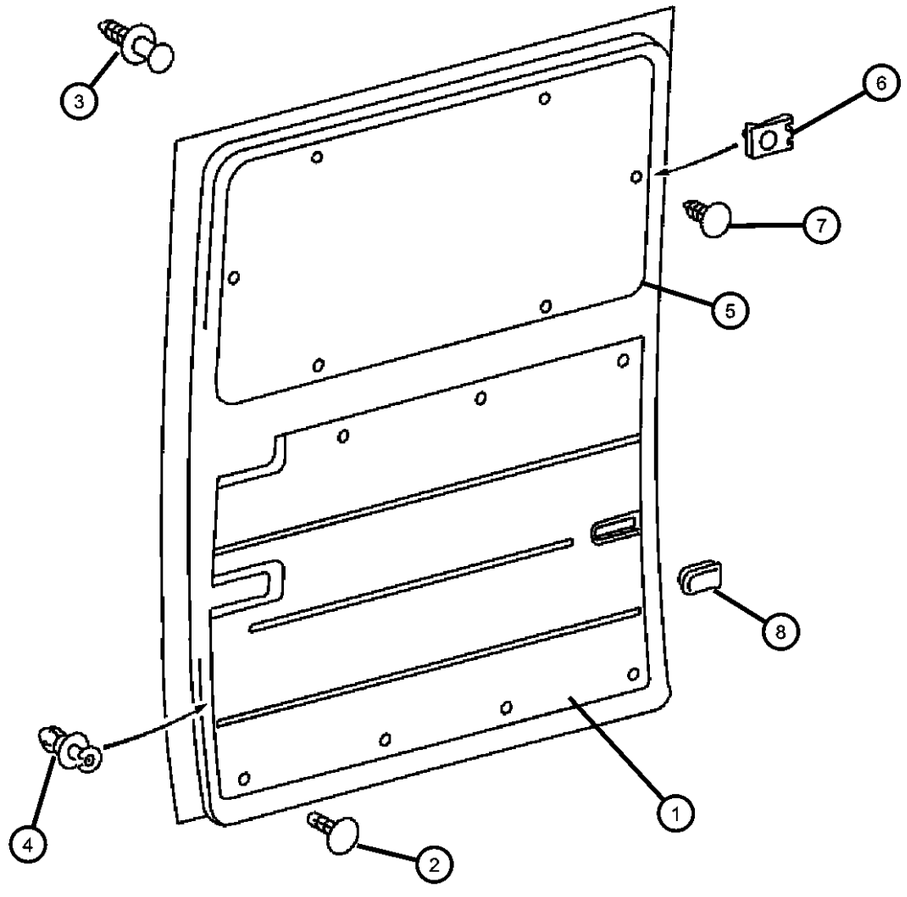

ITEM	PART NUMBER	QTY	LINE	SERIES	BODY	ENGINE	TRANS	TRIM	DESCRIPTION
	05123877AA	1	2, 6	L	11, 12, 14, 15, 16				With [GKE] Sliding Left Door
		1	2, 6	L	51, 52, 54, 55, 56				With [GKE] Sliding Left Door
		1	3, 7	L	12, 15, 16				With [GKE] Sliding Left Door
		1	2, 6	L	11, 12, 14, 15, 16				With [GKE] Sliding Left Door and [CTE] Washable Wall
		1	3, 7	L	12, 15, 16				With [GKA] Sliding Right Door and [CTE] Washable Wall
2									PIN, Push
	05103553AA	9	2, 6	L	11, 12, 14, 15, 16				
		9	2, 6	L	51, 52, 54, 55, 56				
		9	3, 7	L	16, 12, 15				
3									PIN, Push
	05103925AA	1	2, 6	L	11, 12, 14, 15, 16				
		1	2, 6	L	51, 52, 54, 55, 56				
		1	3, 7	L	12, 15, 16				
4									PIN, Push
	06104895AA	10	2, 6	L	11, 12, 14, 15, 16				
		10	2, 6	L	51, 52, 54, 55, 56				
		10	3, 7	L	12, 15, 16				
5									PANEL, Cargo Door, Upper Right & Left
	05123888AA	1	2, 6	L	11, 12, 14, 15, 16				
		1	3, 7	L	12, 15, 16				
6									U-NUT
	05125859AA	10	3, 7	L	12, 15, 16				

SPRINTER (VA)

SERIES	LINE	BODY	ENGINE	TRANSMISSION
L = LOWLINE	3 = HD DODGE 2WD 6 = Lt. Duty DODGE 4WD 2 = Med. Duty DODGE 2WD 7 = Med. Duty DODGE 4WD	55 = Wagon 140" 54 = Wagon 118" 52 = Wagon 140" 51 = Wagon 118" 12 = Van 140" 11 = Van 118" 06 = Front Section 158" 14 = Van 118" 15 = Van 140" 16 = Van 158" 56 = Wagon 158" 01 = Chassis Forward Control 118" 02 = Chassis Forward Control 140"	EX8 = Engine-2.7L I5 Mercedes Turbo Diesel	DGJ = Transmission-5-Spd. Automatic,W5A580

Sliding Door Trim
Figure IVA-420

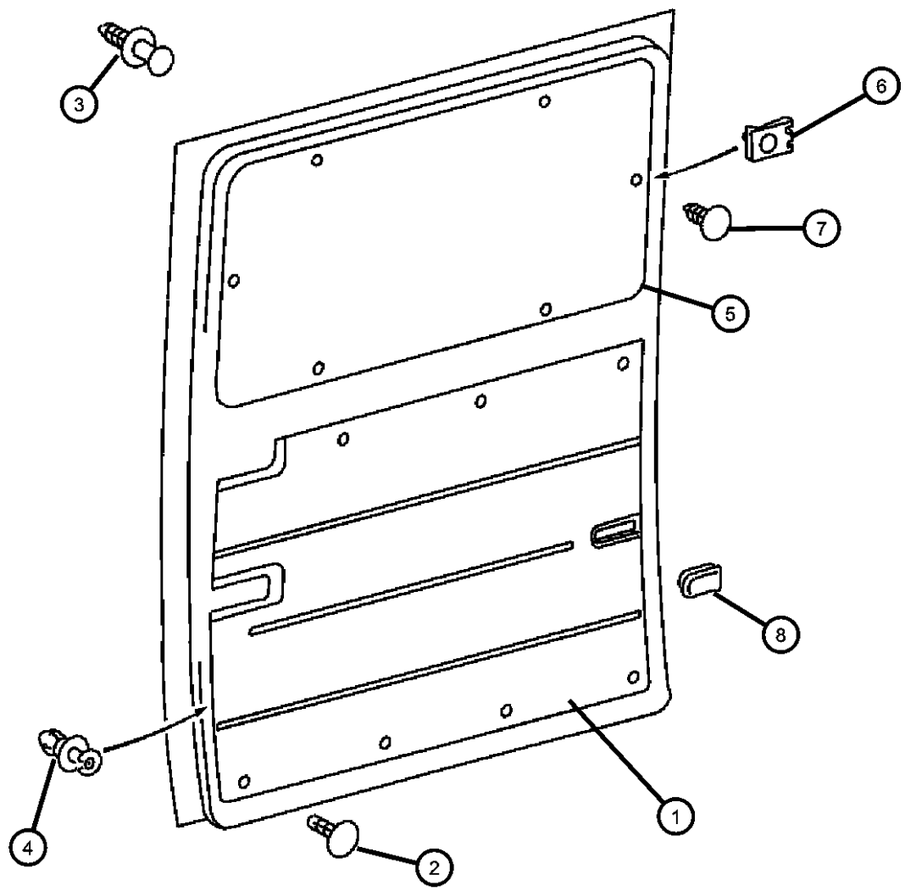

ITEM	PART NUMBER	QTY	LINE	SERIES	BODY	ENGINE	TRANS	TRIM	DESCRIPTION
		10	2, 6	L	11, 12, 14, 15, 16				
7									PIN, Push
	05103818AA	10	2, 6	L	11, 12, 14, 15, 16				
		10	3, 7	L	12, 15, 16				
8									PLUG, Access Hole
	05104365AA	1	2, 6	L	11, 12, 14, 15, 16				Without [GKG], High Clearance
		1	2, 6	L	51, 52, 54, 55, 56				Without [GKG], High Clearance
		1	3, 7	L	16				Without [GKG], High Clearance
	05104588AA	1	2, 6	L	11, 12, 14, 15, 16				With [GKG], High Clearance
		1	3, 7	L	12, 15				With [GKG], High Clearance
-9									CATCH, Sliding Partition Door
	05104424AA	1	2, 6	L	11, 12, 14, 15, 16				Cargo Partition
		1	3, 7	L	12, 15, 16				Cargo Partition
-10									TAPPING PLATE, Side Door Lock Striker
	05124110AA	2	2, 6	L	11, 12, 14, 15, 16				
		2	2, 6	L	51, 52, 54, 55, 56				
		2	3, 7	L	12, 15, 16				

SPRINTER (VA)

SERIES	LINE	BODY	ENGINE	TRANSMISSION
L = LOWLINE	3 = HD DODGE 2WD 6 = Lt. Duty DODGE 4WD 2 = Med. Duty DODGE 2WD 7 = Med. Duty DODGE 4WD	55 = Wagon 140" 54 = Wagon 118" 52 = Wagon 140" 51 = Wagon 118" 12 = Van 140" 11 = Van 118" 06 = Front Section 158" 14 = Van 118" 15 = Van 140" 16 = Van 158" 56 = Wagon 158" 01 = Chassis Forward Control 118" 02 = Chassis Forward Control 140"	EX8 = Engine-2.7L I5 Mercedes Turbo Diesel	DGJ = Transmission-5-Spd. Automatic,W5A580

Rear Dual Door Trim
Figure IVA-430

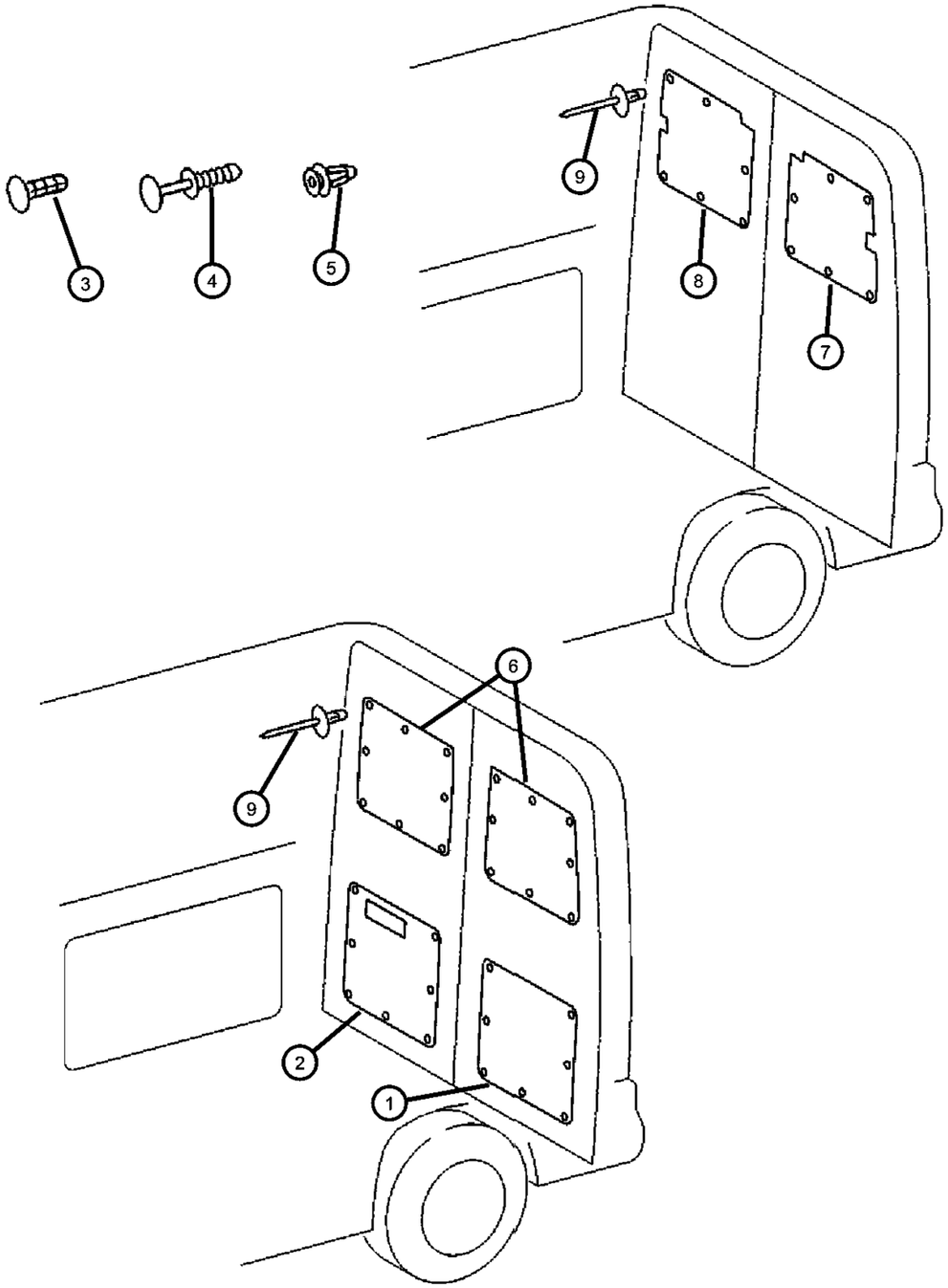

ITEM	PART NUMBER	QTY	LINE	SERIES	BODY	ENGINE	TRANS	TRIM	DESCRIPTION
1									PANEL, Cargo Door, Left
	05104395AA	1	2, 6	L	11, 12, 14, 15, 16				Hard Fiber
		1	2, 6	L	51, 52, 54, 55, 56				Hard Fiber
		1	3, 7	L	12, 15, 16				Hard Fiber
	05123950AA	1	2, 6	L	11, 12, 14, 15, 16				Fabric
		1	2, 6	L	51, 52, 54, 55, 56				Fabric
	05124024AA	1	3, 7	L	12, 15, 16				Plywood
		1	3, 7	L	12, 15, 16				Fabric
		1	2, 6	L	11, 12, 14, 15, 16				Plywood
2									PANEL, Cargo Door, Right
	05104396AA	1	2, 6	L	11, 12, 14, 15, 16				Hard Fiber
		1	2, 6	L	51, 52, 54, 55, 56				Hard Fiber
		1	3, 7	L	12, 15, 16				Hard Fiber
	05123953AA	1	2, 6	L	11, 12, 14, 15, 16				Fabric
		1	2, 6	L	51, 52, 54, 55, 56				Fabric
		1	3, 7	L	12, 15, 16				Fabric
	05124026AA	1	2, 6	L	11, 12, 14, 15, 16				Plywood
		1	3, 7	L	12, 15, 16				Plywood
3									PIN, Push, White
	05103553AA	7	2, 6	L	11, 12, 14, 15, 16				
		7	2, 6	L	51, 52, 54, 55, 56				
		7	3, 7	L	12, 15, 16				
4									PIN, Push

SPRINTER (VA)

SERIES	LINE	BODY	ENGINE	TRANSMISSION
L = LOWLINE	3 = HD DODGE 2WD 6 = Lt. Duty DODGE 4WD 2 = Med. Duty DODGE 2WD 7 = Med. Duty DODGE 4WD	55 = Wagon 140" 54 = Wagon 118" 52 = Wagon 140" 51 = Wagon 118" 12 = Van 140" 11 = Van 118" 06 = Front Section 158" 14 = Van 118" 15 = Van 140" 16 = Van 158" 56 = Wagon 158" 01 = Chassis Forward Control 118" 02 = Chassis Forward Control 140"	EX8 = Engine-2.7L I5 Mercedes Turbo Diesel	DGJ = Transmission-5-Spd. Automatic,W5A580

Rear Dual Door Trim
Figure IVA-430

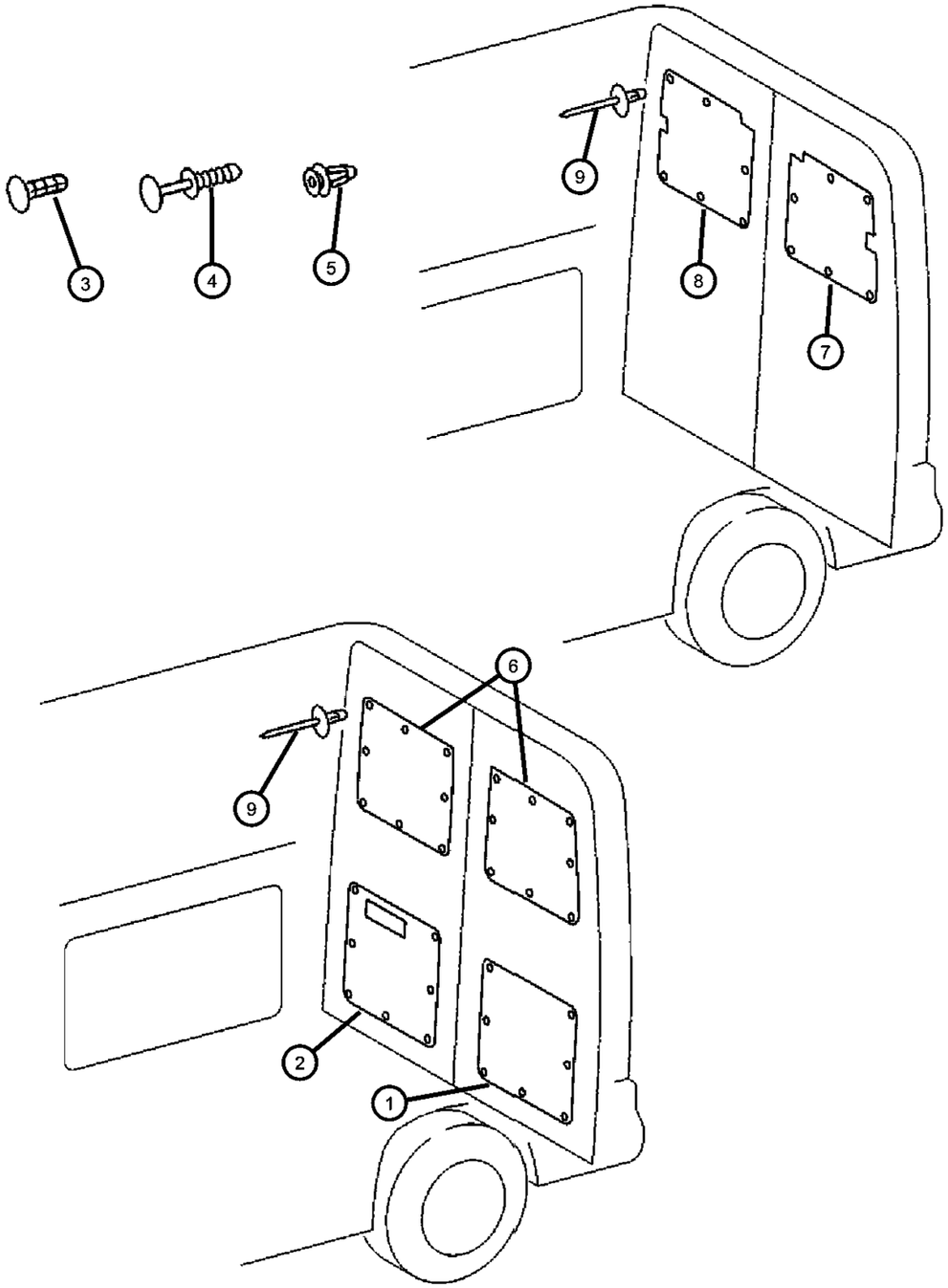

ITEM	PART NUMBER	QTY	LINE	SERIES	BODY	ENGINE	TRANS	TRIM	DESCRIPTION
	05103925AA	1	2, 6	L	11, 12, 14, 15, 16				
		1	2, 6	L	51, 52, 54, 55, 56				
		1	3, 7	L	12, 15, 16				
5									PIN, Push
	06104895AA	15	2, 6	L	11, 12, 14, 15, 16				
		15	2, 6	L	51, 52, 54, 55, 56				
		15	3, 7	L	12, 15, 16				
6									PANEL, Cargo Door, Right & Left
	05124035AA	1	2, 6	L	11, 12, 14, 15, 16				
		1	3, 7	L	12, 15, 16				
7									PANEL, Cargo Door, Left
	05124036AA	1	2, 6	L	11, 12, 14, 15, 16				
		1	3, 7	L	12, 15, 16				
8									PANEL, Cargo Door, Right
	05124036AA	1	2, 6	L	11, 12, 14, 15, 16				
		1	3, 7	L	12, 15, 16				
9									RIVET
	06104865AA	AR	3, 7	L	12, 15, 16				
		AR	2, 6	L	11, 12, 14, 15, 16				
		AR	2, 6	L	51, 52, 54, 55, 56				

SPRINTER (VA)

SERIES	LINE	BODY	ENGINE	TRANSMISSION
L = LOWLINE	3 = HD DODGE 2WD 6 = Lt. Duty DODGE 4WD 2 = Med. Duty DODGE 2WD 7 = Med. Duty DODGE 4WD	55 = Wagon 140" 54 = Wagon 118" 52 = Wagon 140" 51 = Wagon 118" 12 = Van 140" 11 = Van 118" 06 = Front Section 158" 14 = Van 118" 15 = Van 140" 16 = Van 158" 56 = Wagon 158" 01 = Chassis Forward Control 118" 02 = Chassis Forward Control 140"	EX8 = Engine-2.7L I5 Mercedes Turbo Diesel	DGJ = Transmission-5-Spd. Automatic,W5A580

AR = use ase required - = Non illustrrated part

Front Seat - Venice
Figure IVA-510

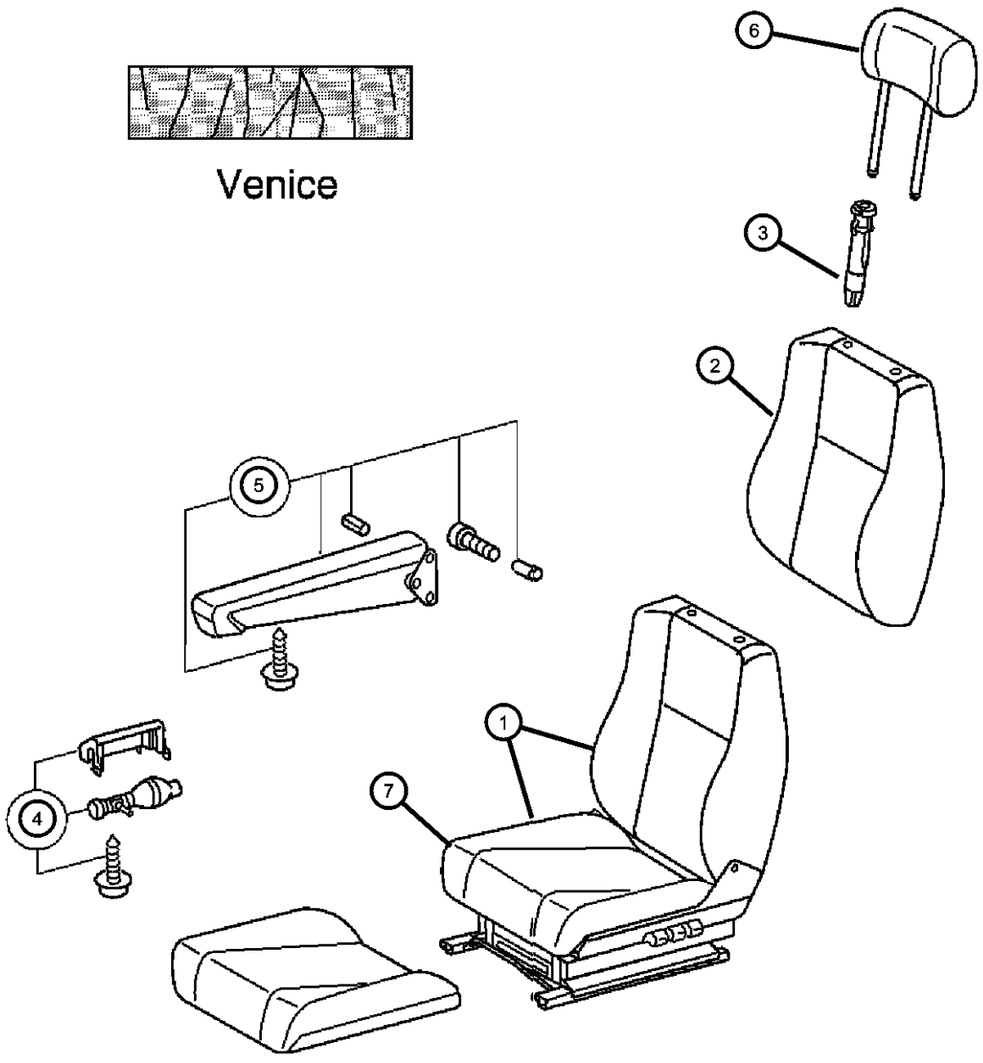

ITEM	PART NUMBER	QTY	LINE	SERIES	BODY	ENGINE	TRANS	TRIM	DESCRIPTION
1									SEAT COMPLETE, Front
	05126970AA	1	3, 7	L	12, 15, 16				Auxiliary Seat, Right
		1	2, 6	L	01, 02, 06				Auxiliary Seat, Right
		1	2, 6	L	11, 12, 14, 15, 16				Auxiliary Seat, Right
		1	2, 6	L	51, 52, 54, 55, 56				Auxiliary Seat, Right
	05126975AA	1	2, 6	L	01, 02, 06				Heated, Left
		1	2, 6	L	11, 12, 14, 15, 16				Heated, Left
		1	2, 6	L	51, 52, 54, 55, 56				Heated, Left
		1	3, 7	L	12, 15, 16				Heated, Left
	05126982AA	1	2, 6	L	01, 02, 06				Comfort Seat, Left
		1	2, 6	L	11, 12, 14, 15, 16				Comfort Seat, Left
		1	2, 6	L	51, 52, 54, 55, 56				Comfort Seat, Left
		1	3, 7	L	12, 15, 16				Comfort Seat, Left
	05126985AA	1	2, 6	L	01, 02, 06				Heated Comfort Seat, Left
		1	2, 6	L	11, 12, 14, 15, 16				Heated Comfort Seat, Left
		1	2, 6	L	51, 52, 54, 55, 56				Heated Comfort Seat, Left
		1	3, 7	L	12, 15, 16				Heated Comfort Seat, Left
	05126986AA	1	2, 6	L	01, 02, 06				Comfort Seat, Right
		1	2, 6	L	11, 12, 14, 15, 16				Comfort Seat, Right
		1	2, 6	L	54, 55, 56, 51, 52				Comfort Seat, Right
		1	3, 7	L	12, 15, 16				Comfort Seat, Right
	05126989AA	1	2, 6	L	01, 02, 06				Heated, Right
		1	3, 7	L	12, 15, 16				Heated, Right
		1	2, 6	L	11, 12, 14, 15, 16				Heated, Right

SPRINTER (VA)

SERIES	LINE	BODY	ENGINE	TRANSMISSION
L = LOWLINE	3 = HD DODGE 2WD 6 = Lt. Duty DODGE 4WD 2 = Med. Duty DODGE 2WD 7 = Med. Duty DODGE 4WD	55 = Wagon 140" 54 = Wagon 118" 52 = Wagon 140" 51 = Wagon 118" 12 = Van 140" 11 = Van 118" 06 = Front Section 158" 14 = Van 118" 15 = Van 140" 16 = Van 158" 56 = Wagon 158" 01 = Chassis Forward Control 118" 02 = Chassis Forward Control 140"	EX8 = Engine-2.7L I5 Mercedes Turbo Diesel	DGJ = Transmission-5-Spd. Automatic,W5A580

AR = use ase required - = Non illustrrated part

Front Seat - Venice
Figure IVA-510

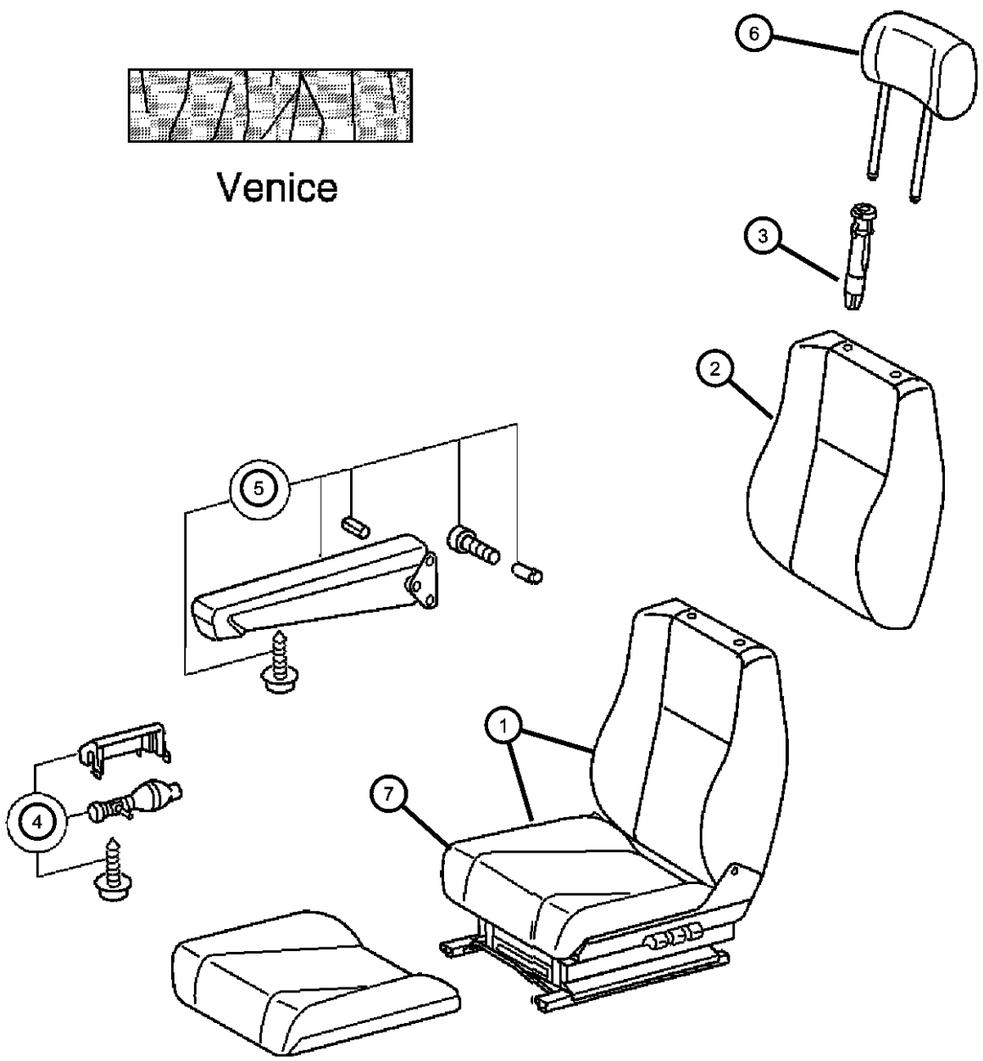

ITEM	PART NUMBER	QTY	LINE	SERIES	BODY	ENGINE	TRANS	TRIM	DESCRIPTION
		1	2, 6	L	51, 52, 54, 55, 56				Heated, Right
2									SEAT BACK, Front
	05103777AA	1						*O0	Right
	05134643AA	1	2, 3, 6, 7					*A7	Left
3									SLEEVE, Headrest
	1AV08AA7AA	2	2, 6	L	01, 02, 06				
		2	2, 6	L	11, 12, 14, 15, 16				
		2	3, 7	L	12, 15, 16				
		2	2, 6	L	51, 52, 54, 55, 56				
4									PUMP, Lumbar Support
	05127631AA	1	2, 6	L	01, 02, 06				
		1	2, 6	L	11, 12, 14, 15, 16				
		1	2, 6	L	51, 52, 54, 55, 56				
		1	3, 7	L	12, 15, 16				
5									ARMREST, Seat
	05103710AA	1	2, 6	L	11, 12, 14, 15, 16				With Mounting Hardware, Left
		1	2, 6	L	51, 52, 54, 55, 56				With Mounting Hardware, Left
	05103711AA	1	2, 6	L	01, 02, 06				With Mounting Hardware, Right
		1	2, 6	L	11, 12, 14, 15, 16				With Mounting Hardware, Right
		1	2, 6	L	51, 52, 54, 55, 56				With Mounting Hardware, Right
		1	2, 6	L	01, 02, 06				With Mounting Hardware, Left
6									HEADREST
	05125368AA	1	2, 6	L	01, 02, 06				Venice

SPRINTER (VA)

SERIES	LINE	BODY	ENGINE	TRANSMISSION
L = LOWLINE	3 = HD DODGE 2WD 6 = Lt. Duty DODGE 4WD 2 = Med. Duty DODGE 2WD 7 = Med. Duty DODGE 4WD	55 = Wagon 140" 54 = Wagon 118" 52 = Wagon 140" 51 = Wagon 118" 12 = Van 140" 11 = Van 118" 06 = Front Section 158" 14 = Van 118" 15 = Van 140" 16 = Van 158" 56 = Wagon 158" 01 = Chassis Forward Control 118" 02 = Chassis Forward Control 140"	EX8 = Engine-2.7L I5 Mercedes Turbo Diesel	DGJ = Transmission-5-Spd. Automatic,W5A580

AR = use ase required - = Non illustrrated part

Front Seat - Venice
Figure IVA-510

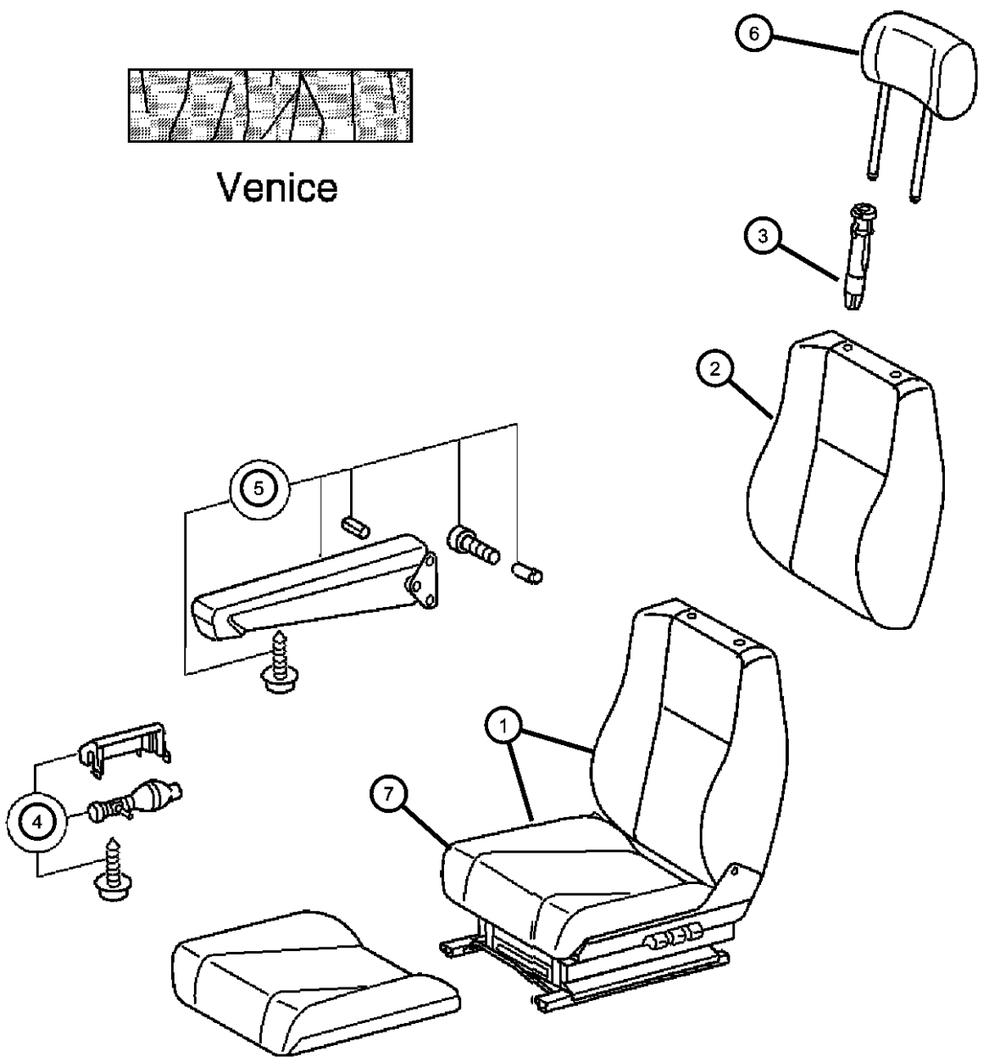

ITEM	PART NUMBER	QTY	LINE	SERIES	BODY	ENGINE	TRANS	TRIM	DESCRIPTION
		3	2, 6	L	11, 12, 14, 15, 16				Venice
		1	2, 6	L	51, 52, 54, 55, 56				Venice
		1	3, 7	L	12, 15, 16				Venice
7									SEAT
	05133020AA	1	2, 6	L	11, 12, 14, 15, 16				Standard Seat - Heated, Left
		1	2, 6	L	51, 52, 54, 55, 56				Standard Seat - Heated, Left
		1	3, 7	L	12, 15, 16				Standard Seat - Heated, Left
	05133025AA	1	2, 6	L	11, 12, 14, 15, 16				Comfort Seat, Left
	05133015AA	1	2, 6	L	11, 12, 14, 15, 16				Single Seat, Driver Side
		1	2, 6	L	51, 52, 54, 55, 56				Single Seat, Driver Side
		1	3, 7	L	12, 15, 16				Single Seat, Driver Side
		1	2, 6	L	51, 52, 54, 55, 56				Comfort Seat, Left
		1	3, 7	L	12, 15, 16				Comfort Seat, Left
	05133028AA	1	2, 6	L	11, 12, 14, 15, 16				Comfort Seat - Heated, Left
		1	2, 6	L	51, 52, 54, 55, 56				Comfort Seat - Heated, Left
		1	3, 7	L	12, 15, 16				Comfort Seat - Heated, Left
	05133029AA	1	6, 2	L	12, 14, 15, 16, 11				Comfort Seat, Right
		1	2, 6	L	51, 52, 54, 55, 56				Comfort Seat, Right
		1	3, 7	L	12, 15, 16				Comfort Seat, Right
	05133032AA	1	2, 6	L	11, 12, 14, 15, 16				Comfort Seat - Heated, Right
		1	2, 6	L	51, 52, 54, 55, 56				Comfort Seat - Heated, Right
		1	3, 7	L	12, 15, 16				Comfort Seat - Heated, Right

SPRINTER (VA)

SERIES	LINE	BODY	ENGINE	TRANSMISSION
L = LOWLINE	3 = HD DODGE 2WD 6 = Lt. Duty DODGE 4WD 2 = Med. Duty DODGE 2WD 7 = Med. Duty DODGE 4WD	55 = Wagon 140" 54 = Wagon 118" 52 = Wagon 140" 51 = Wagon 118" 12 = Van 140" 11 = Van 118" 06 = Front Section 158" 14 = Van 118" 15 = Van 140" 16 = Van 158" 56 = Wagon 158" 01 = Chassis Forward Control 118" 02 = Chassis Forward Control 140"	EX8 = Engine-2.7L I5 Mercedes Turbo Diesel	DGJ = Transmission-5-Spd. Automatic,W5A580

AR = use ase required - = Non illustrrated part

Front Seat - Santos
Figure IVA-515

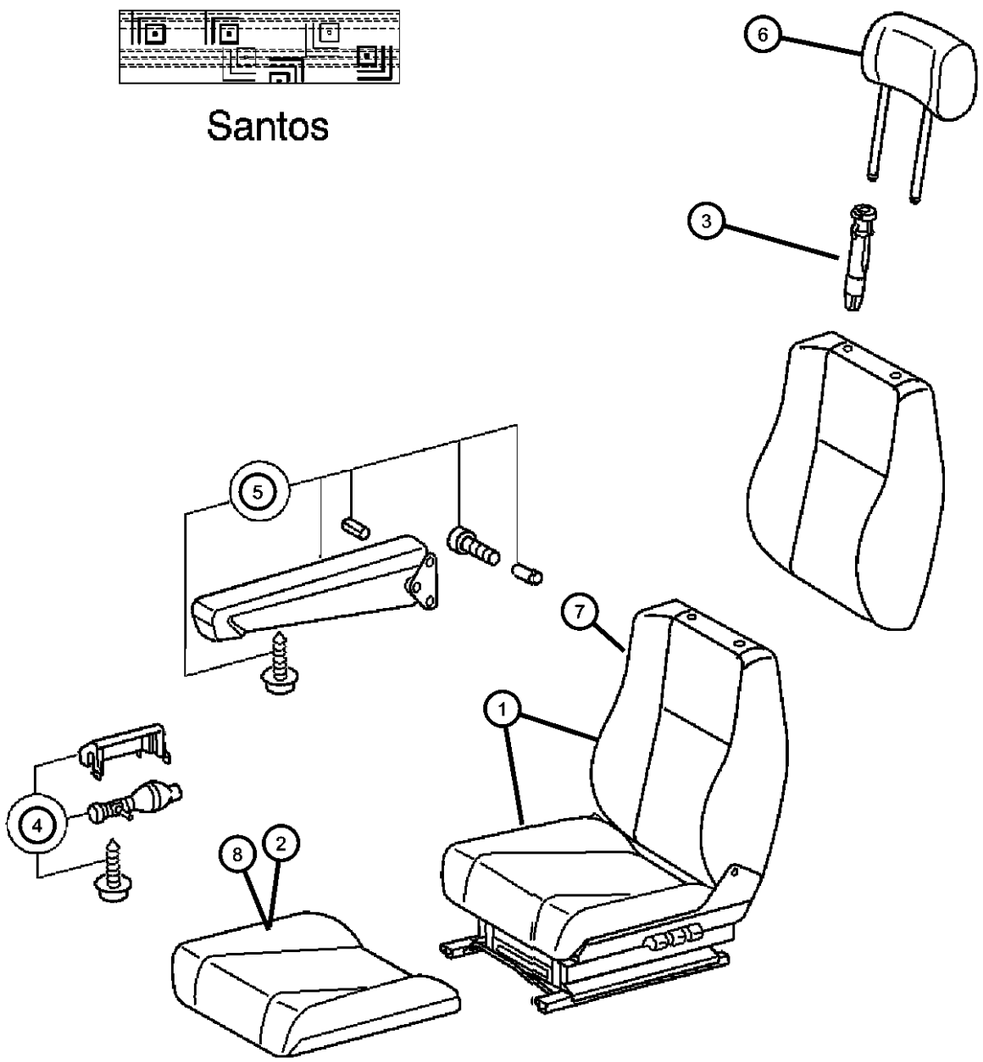

ITEM	PART NUMBER	QTY	LINE	SERIES	BODY	ENGINE	TRANS	TRIM	DESCRIPTION
1									SEAT COMPLETE, Front
	05127100AA	1	2, 6	L	01, 02, 06				Right
		1	2, 6	L	11, 12, 14, 15, 16				Right
		1	2, 6	L	51, 52, 54, 55, 56				Right
		1	3, 7	L	16, 12, 15				Right
	05127102AA	1	2, 6	L	01, 02, 06			*B7	Left
		1	2, 6	L	11, 12, 14, 15, 16			*B7	Left
	05127105AA	1	2, 6	L	11, 12, 14, 15, 16				Heated, Left
		1	2, 6	L	51, 52, 54, 55, 56				Heated, Left
		1	2, 6	L	51, 52, 54, 55, 56			*B7	Left
		1	3, 7	L	12, 15, 16			*B7	Left
		1	2, 6	L	01, 02, 06				Heated, Left
	05127110AA	1	3, 7	L	12, 15, 16				Comfort Seat, Left
	05127114AA	1	2, 6	L	01, 02, 06				Comfort Seat, Right
		1	3, 7	L	12, 15, 16				Heated, Left
		1	2, 6	L	01, 02, 06				Comfort Seat, Left
		1	2, 6	L	11, 12, 14, 15, 16				Comfort Seat, Left
		1	2, 6	L	51, 52, 54, 55, 56				Comfort Seat, Left
		1	2, 6	L	16, 11, 12, 14, 15				Comfort Seat, Right
		1	2, 6	L	51, 52, 54, 55, 56				Comfort Seat, Right
		1	3, 7	L	12, 15, 16				Comfort Seat, Right
2									CUSHION, Front Seat, Driver
	05133234AA	1	2, 6	L	11, 12, 14, 15, 16				

SPRINTER (VA)

SERIES	LINE	BODY	ENGINE	TRANSMISSION
L = LOWLINE	3 = HD DODGE 2WD 6 = Lt. Duty DODGE 4WD 2 = Med. Duty DODGE 2WD 7 = Med. Duty DODGE 4WD	55 = Wagon 140" 54 = Wagon 118" 52 = Wagon 140" 51 = Wagon 118" 12 = Van 140" 11 = Van 118" 06 = Front Section 158" 14 = Van 118" 15 = Van 140" 16 = Van 158" 56 = Wagon 158" 01 = Chassis Forward Control 118" 02 = Chassis Forward Control 140"	EX8 = Engine-2.7L I5 Mercedes Turbo Diesel	DGJ = Transmission-5-Spd. Automatic,W5A580

AR = use ase required - = Non illustrrated part

Front Seat - Santos
Figure IVA-515

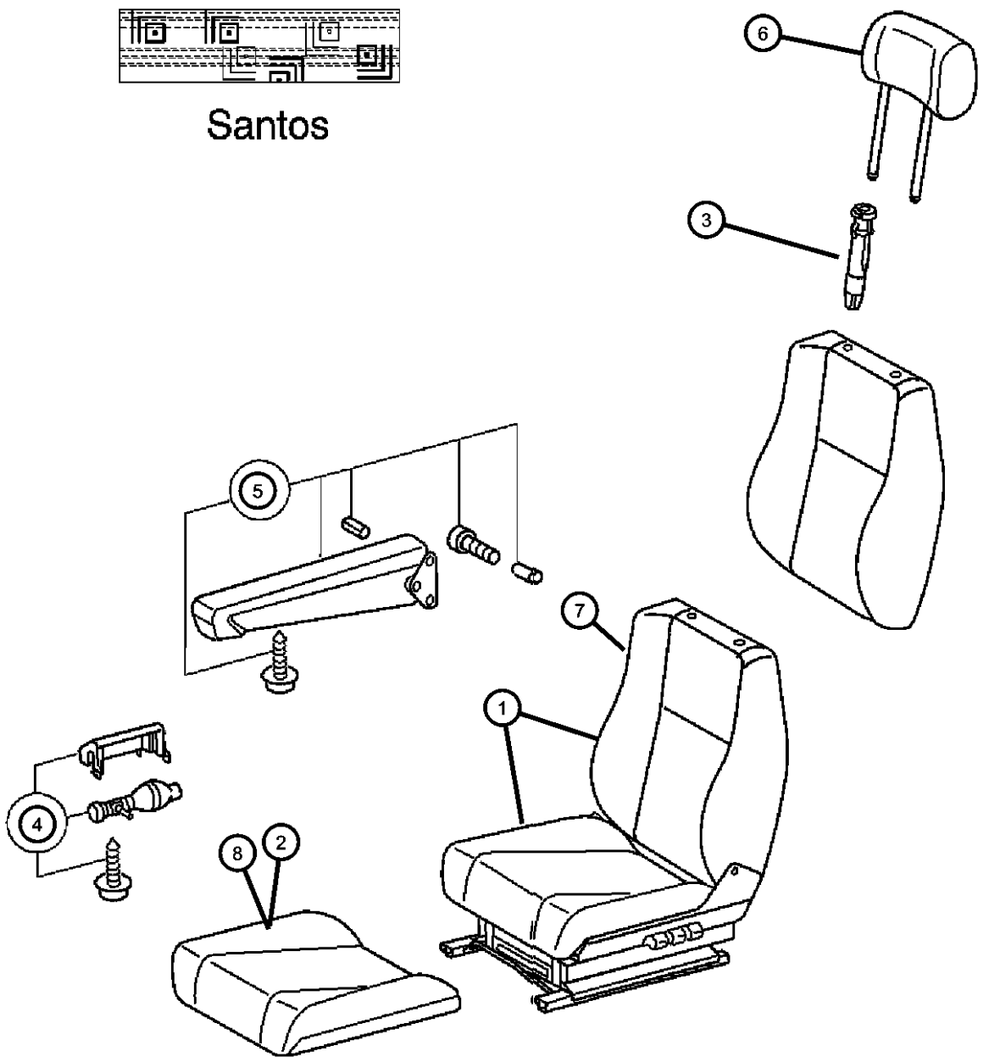

ITEM	PART NUMBER	QTY	LINE	SERIES	BODY	ENGINE	TRANS	TRIM	DESCRIPTION
		1	2, 6	L	51, 52, 54, 55, 56				
		1	3, 7	L					
		1	2, 6	L	01, 02, 06				
3									SLEEVE, Headrest
	1AV08AA7AA	2	2, 6	L	01, 02, 06				
		2	2, 6	L	11, 12, 14, 15, 16				
		2	2, 6	L	51, 52, 54, 55, 56				
		2	3, 7	L	12, 15, 16				
4									PUMP, Lumbar Support
	05127631AA	1	2, 6	L	01, 02, 06				
		1	2, 6	L	11, 12, 14, 15, 16				
		1	2, 6	L	51, 52, 54, 55, 56				
		1	7, 3	L	12, 15, 16				
5									ARMREST, Seat
	05103710AA	1	2, 6	L	11, 12, 14, 15, 16				With Mounting Hardware, Left
		1	2, 6	L	51, 52, 54, 55, 56				With Mounting Hardware, Left
		1	2, 6	L	01, 02, 06				With Mounting Hardware, Left
	05103711AA	1	2, 6	L	01, 02, 06				With Mounting Hardware, Right
		1	2, 6	L	11, 12, 14, 15, 16				With Mounting Hardware, Right
		1	2, 6	L	51, 52, 54, 55, 56				With Mounting Hardware, Right
6									HEADREST
	05125377AA	1	2, 6	L	11, 12, 14, 15, 16				Santos
		1	2, 6	L	52, 54, 55, 56, 51				Santos

SPRINTER (VA)

SERIES	LINE	BODY	ENGINE	TRANSMISSION
L = LOWLINE	3 = HD DODGE 2WD 6 = Lt. Duty DODGE 4WD 2 = Med. Duty DODGE 2WD 7 = Med. Duty DODGE 4WD	55 = Wagon 140" 54 = Wagon 118" 52 = Wagon 140" 51 = Wagon 118" 12 = Van 140" 11 = Van 118" 06 = Front Section 158" 14 = Van 118" 15 = Van 140" 16 = Van 158" 56 = Wagon 158" 01 = Chassis Forward Control 118" 02 = Chassis Forward Control 140"	EX8 = Engine-2.7L I5 Mercedes Turbo Diesel	DGJ = Transmission-5-Spd. Automatic,W5A580

AR = use ase required - = Non illustrrated part

Front Seat - Santos
Figure IVA-515

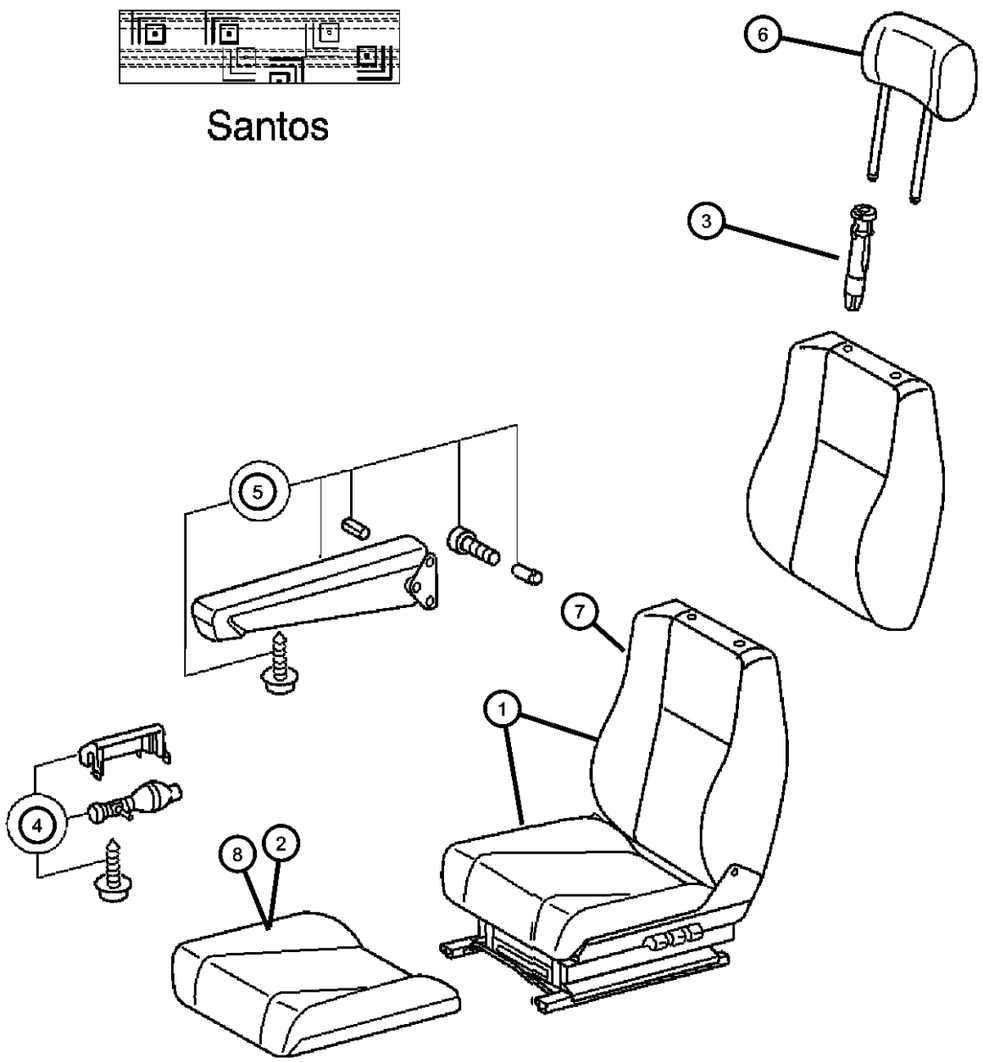

ITEM	PART NUMBER	QTY	LINE	SERIES	BODY	ENGINE	TRANS	TRIM	DESCRIPTION
	05125385AA	1	3, 7	L	12, 15, 16				Santos
7									BACK, Front Seat
	05133276AA	1	2, 6	L	11, 12, 14, 15, 16				Right
		1	2, 6	L	51, 52, 54, 55, 56				Right
8									CUSHION, Front Seat, Passenger
	05133244AA	1	2, 6	L	01, 02, 06				
		1	2, 6	L	11, 12, 14, 15, 16				
		1	2, 6	L	51, 52, 54, 55, 56				
		1	3, 7	L					

SPRINTER (VA)

SERIES	LINE	BODY	ENGINE	TRANSMISSION
L = LOWLINE	3 = HD DODGE 2WD 6 = Lt. Duty DODGE 4WD 2 = Med. Duty DODGE 2WD 7 = Med. Duty DODGE 4WD	55 = Wagon 140" 54 = Wagon 118" 52 = Wagon 140" 51 = Wagon 118" 12 = Van 140" 11 = Van 118" 06 = Front Section 158" 14 = Van 118" 15 = Van 140" 16 = Van 158" 56 = Wagon 158" 01 = Chassis Forward Control 118" 02 = Chassis Forward Control 140"	EX8 = Engine-2.7L I5 Mercedes Turbo Diesel	DGJ = Transmission-5-Spd. Automatic,W5A580

AR = use ase required - = Non illustrrated part

Front Seat - Catano
Figure IVA-520

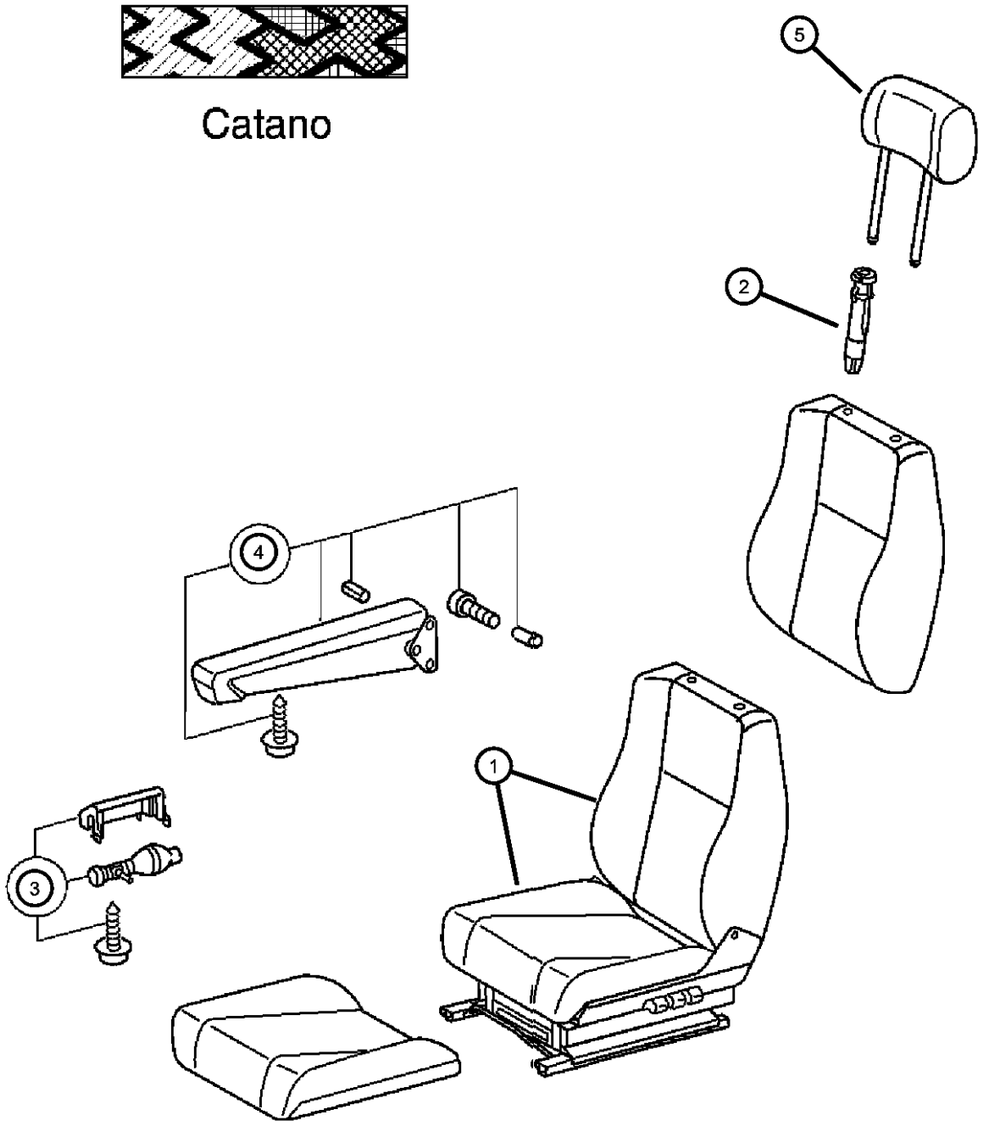

ITEM	PART NUMBER	QTY	LINE	SERIES	BODY	ENGINE	TRANS	TRIM	DESCRIPTION
1									SEAT COMPLETE, Front
	05126994AA	1	2, 6	L	11, 12, 14, 15, 16			*C7	Left
		1	2, 6	L	01, 02, 06			*C7	Left
		1	2, 6	L	51, 52, 54, 55, 56			*C7	Left
		1	3, 7	L	12, 15, 16			*C7	Left
2									SLEEVE, Headrest
	1AV08AA7AA	2	2, 6	L	01, 02, 06				
		2	2, 6	L	11, 12, 14, 15, 16				
		2	2, 6	L	54, 55, 56, 51, 52				
		2	3, 7	L	12, 15, 16				
3									PUMP, Lumbar Support
	05127631AA	1	2, 6	L	01, 02, 06				
		1	2, 6	L	11, 12, 14, 15, 16				
		1	2, 6	L	51, 52, 54, 55, 56				
		1	3, 7	L	12, 15, 16				
4									ARMREST, Seat
	05103710AA	1	2, 6	L	01, 02, 06				With Mounting Hardware, Left
		1	2, 6	L	11, 12, 14, 15, 16				With Mounting Hardware, Left
		1	2, 6	L	51, 52, 54, 55, 56				With Mounting Hardware, Left
	05103711AA	1	2, 6	L	01, 02, 06				With Mounting Hardware, Right
		1	2, 6	L	11, 12, 14, 15, 16				With Mounting Hardware, Right
		1	2, 6	L	51, 52, 54, 55, 56				With Mounting Hardware, Right
5									HEADREST
	05104534AA	1	2, 6	L	01, 02, 06				Catano

SPRINTER (VA)

SERIES	LINE	BODY	ENGINE	TRANSMISSION
L = LOWLINE	3 = HD DODGE 2WD 6 = Lt. Duty DODGE 4WD 2 = Med. Duty DODGE 2WD 7 = Med. Duty DODGE 4WD	55 = Wagon 140" 54 = Wagon 118" 52 = Wagon 140" 51 = Wagon 118" 12 = Van 140" 11 = Van 118" 06 = Front Section 158" 14 = Van 118" 15 = Van 140" 16 = Van 158" 56 = Wagon 158" 01 = Chassis Forward Control 118" 02 = Chassis Forward Control 140"	EX8 = Engine-2.7L I5 Mercedes Turbo Diesel	DGJ = Transmission-5-Spd. Automatic,W5A580

AR = use ase required - = Non illustrrated part

Front Seat - Catano
Figure IVA-520

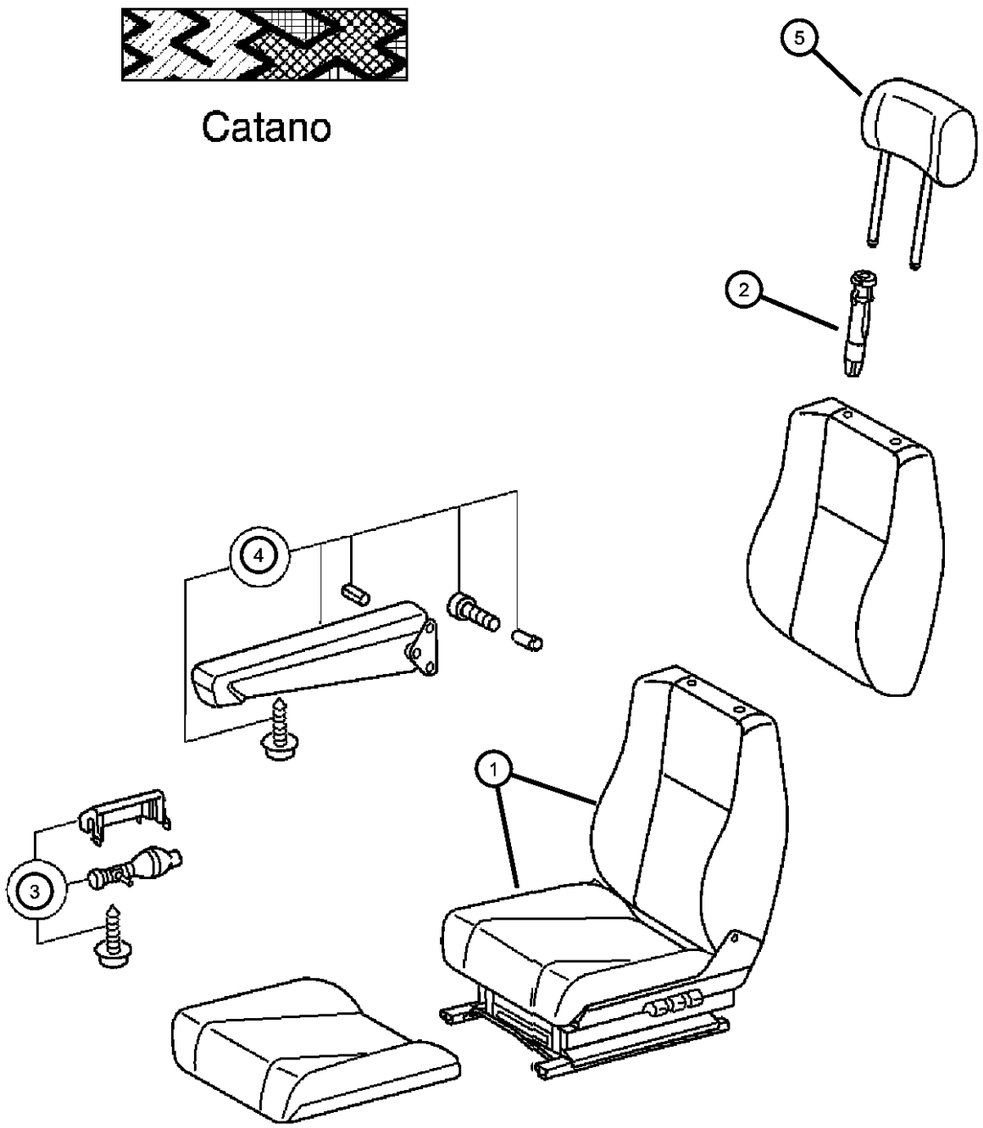

ITEM	PART NUMBER	QTY	LINE	SERIES	BODY	ENGINE	TRANS	TRIM	DESCRIPTION
		1	2, 6	L	11, 12, 14, 15, 16			*C7	Catano
		1	2, 6	L	51, 52, 54, 55, 56				Catano
		1	3, 7	L	12, 15, 16				Catano

SPRINTER (VA)

SERIES	LINE	BODY	ENGINE	TRANSMISSION
L = LOWLINE	3 = HD DODGE 2WD 6 = Lt. Duty DODGE 4WD 2 = Med. Duty DODGE 2WD 7 = Med. Duty DODGE 4WD	55 = Wagon 140" 54 = Wagon 118" 52 = Wagon 140" 51 = Wagon 118" 12 = Van 140" 11 = Van 118" 06 = Front Section 158" 14 = Van 118" 15 = Van 140" 16 = Van 158" 56 = Wagon 158" 01 = Chassis Forward Control 118" 02 = Chassis Forward Control 140"	EX8 = Engine-2.7L I5 Mercedes Turbo Diesel	DGJ = Transmission-5-Spd. Automatic,W5A580

AR = use ase required - = Non illustrrated part

Front Seat - Attaching Parts
Figure IVA-525

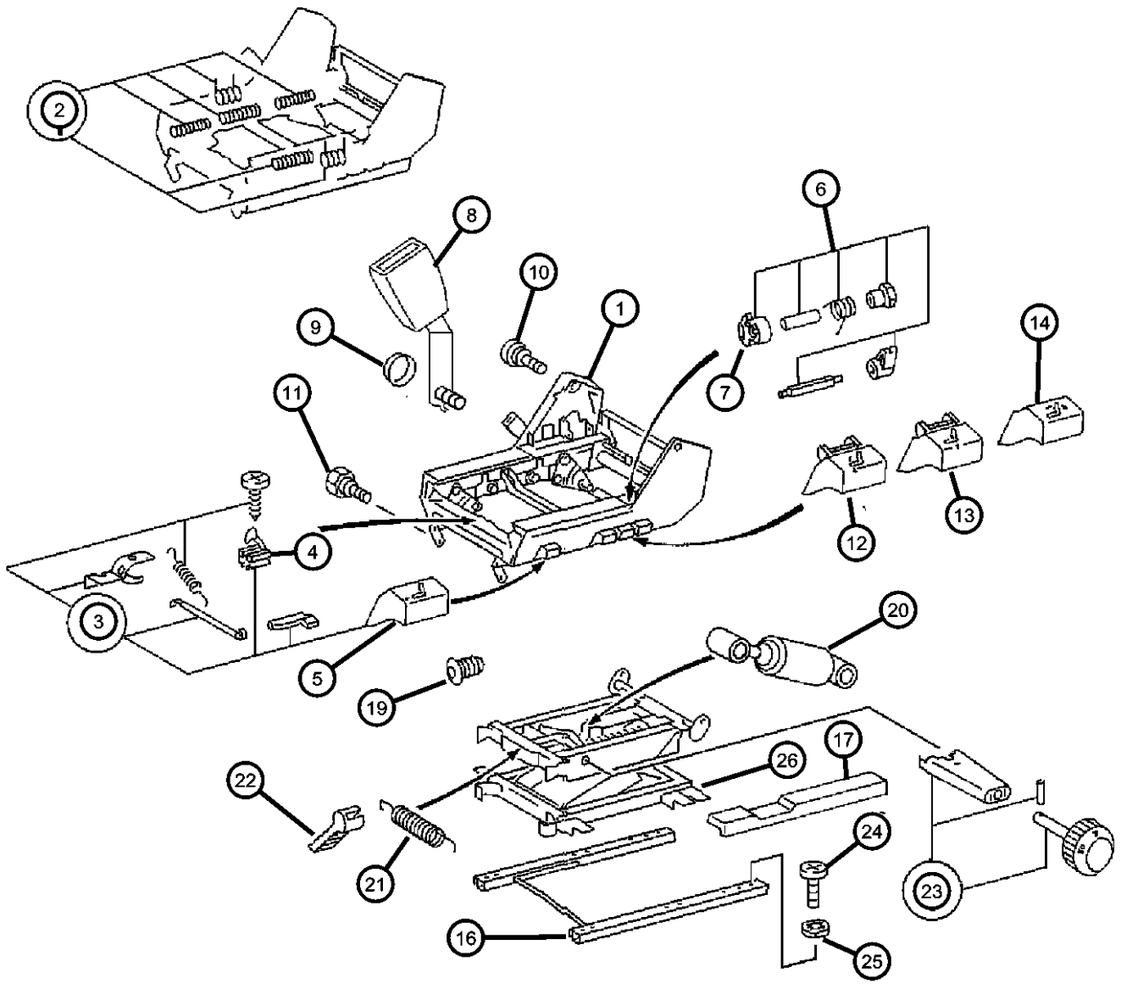

ITEM	PART NUMBER	QTY	LINE	SERIES	BODY	ENGINE	TRANS	TRIM	DESCRIPTION
1									ADJUSTER, Seat
	05103703AA	1	2, 6	L	01, 02, 06				
		1	2, 6	L	51, 52, 54, 55, 56				Driver
		1	3, 7	L	12, 15, 16				Driver
	05133211AA	1	2, 6	L	01, 02, 06				[CDD], Luxury Bucket, Driver
		1	2, 6	L	11, 12, 14, 15, 16				[CDD], Luxury Bucket, Driver
		1	2, 6	L	51, 52, 54, 55, 56				[CDD], Luxury Bucket, Driver
		1	2, 6	L	11, 12, 14, 15, 16				
	05133266AA	1	2, 6	L	01, 02, 06				Passenger
		1	2, 6	L	11, 12, 14, 15, 16				Passenger
		1	2, 6	L	51, 52, 54, 55, 56				Passenger
		1	3, 7	L	12, 15, 16				Passenger
		1	3, 7	L	12, 15, 16				[CDD], Luxury Bucket, Driver
	05133264AA	1	2, 6	L	01, 02, 06				[CDY], Luxury Bucket, Passenger
		1	2, 6	L	11, 12, 14, 15, 16				[CDY], Luxury Bucket, Passenger
		1	2, 6	L	51, 52, 54, 55, 56				[CDY], Luxury Bucket, Passenger
		1	3, 7	L	12, 15, 16				[CDY], Luxury Bucket, Passenger
2									SPRING, Seat Track Adjuster
	05133214AA	1	2, 6	L	01, 02, 06				
		1	2, 6	L	11, 12, 14, 15, 16				
		1	2, 6	L	51, 52, 54, 55, 56				
		1	3, 7	L	12, 15, 16				
3									HANDLE, Seat Adjuster

SPRINTER (VA)

SERIES	LINE	BODY	ENGINE	TRANSMISSION
L = LOWLINE	3 = HD DODGE 2WD 6 = Lt. Duty DODGE 4WD 2 = Med. Duty DODGE 2WD 7 = Med. Duty DODGE 4WD	55 = Wagon 140" 54 = Wagon 118" 52 = Wagon 140" 51 = Wagon 118" 12 = Van 140" 11 = Van 118" 06 = Front Section 158" 14 = Van 118" 15 = Van 140" 16 = Van 158" 56 = Wagon 158" 01 = Chassis Forward Control 118" 02 = Chassis Forward Control 140"	EX8 = Engine-2.7L I5 Mercedes Turbo Diesel	DGJ = Transmission-5-Spd. Automatic,W5A580

Front Seat - Attaching Parts
Figure IVA-525

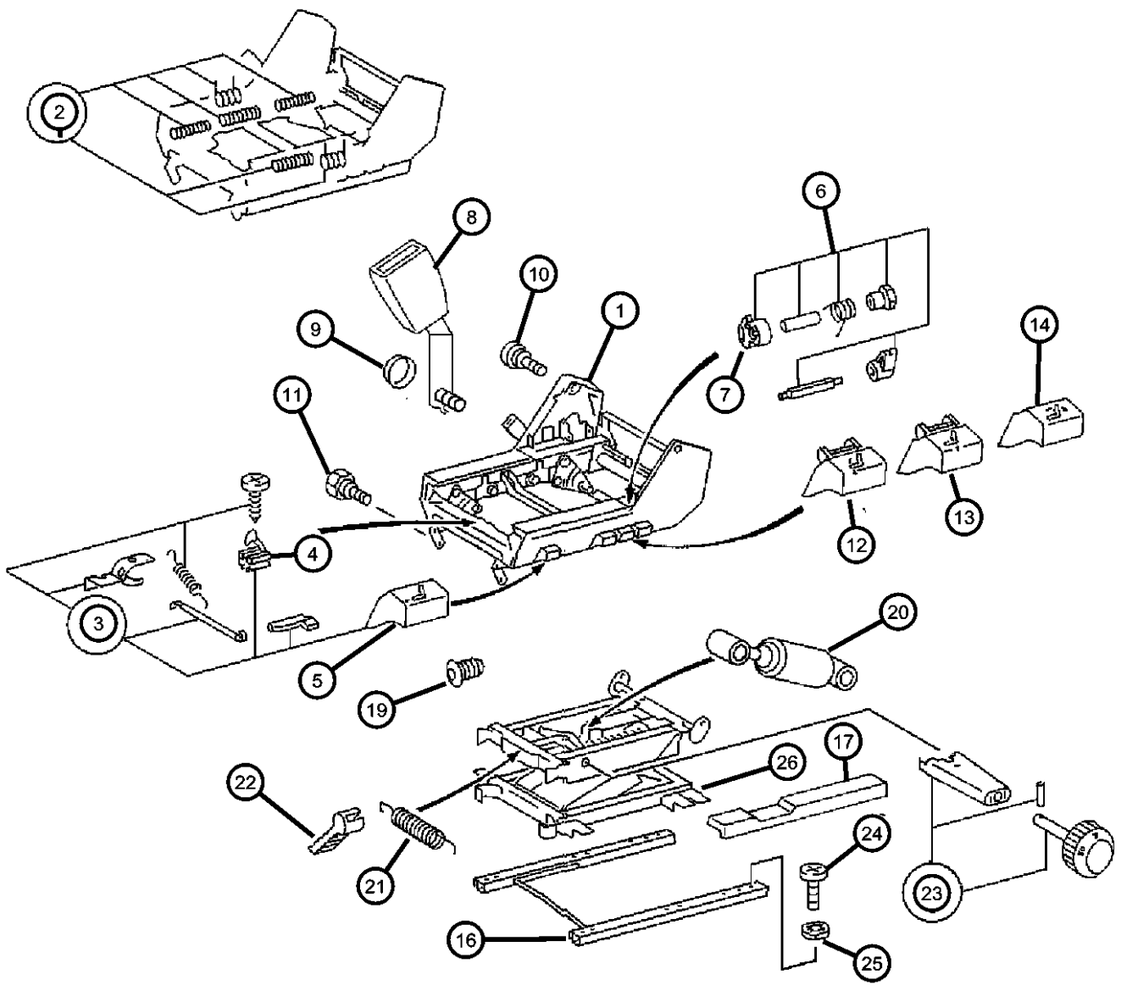

ITEM	PART NUMBER	QTY	LINE	SERIES	BODY	ENGINE	TRANS	TRIM	DESCRIPTION
	05133216AA	1	2, 6	L	01, 02, 06				Seat Cushion Depth, Driver Side
		1	2, 6	L	11, 12, 14, 15, 16				Seat Cushion Depth, Driver Side
		1	2, 6	L	51, 52, 54, 55, 56				Seat Cushion Depth, Driver Side
		1	3, 7	L	12, 15, 16				Seat Cushion Depth, Driver Side
	0ZN48TE4AA	1	3, 7	L	02, 06				Seat Cushion Depth, Passenger Side
4									LOCK, Adjuster
	05133215AA	1	2, 6	L	01, 02, 06				
		1	2, 6	L	11, 12, 14, 15, 16				
		1	2, 6	L	51, 52, 54, 55, 56				
		1	3, 7	L	12, 15, 16				
5									HANDLE, Seat Adjuster
	05133216AA	1	2, 6	L	01, 02, 06				Seat Cushion Depth, Driver Side
	05133267AA	1	2, 6	L	01, 02, 06				Seat Cushion Depth, Passenger Side
		1	2, 6	L	11, 12, 14, 15, 16				Seat Cushion Depth, Passenger Side
		1	2, 6	L	51, 52, 54, 55, 56				Seat Cushion Depth, Passenger Side
		1	2, 6	L	11, 12, 14, 15, 16				Seat Cushion Depth, Driver Side
		1	2, 6	L	51, 52, 54, 55, 56				Seat Cushion Depth, Driver Side
6									HARDWARE KIT
	05133217AA	1	2, 6	L	01, 02, 06				
		1	2, 6	L	11, 12, 14, 15, 16				
		1	2, 6	L	51, 52, 54, 55, 56				
		1	3, 7	L	12, 15, 16				
7									LOCK, Adjuster

SPRINTER (VA)

SERIES	LINE	BODY	ENGINE	TRANSMISSION
L = LOWLINE	3 = HD DODGE 2WD 6 = Lt. Duty DODGE 4WD 2 = Med. Duty DODGE 2WD 7 = Med. Duty DODGE 4WD	55 = Wagon 140" 54 = Wagon 118" 52 = Wagon 140" 51 = Wagon 118" 12 = Van 140" 11 = Van 118" 06 = Front Section 158" 14 = Van 118" 15 = Van 140" 16 = Van 158" 56 = Wagon 158" 01 = Chassis Forward Control 118" 02 = Chassis Forward Control 140"	EX8 = Engine-2.7L I5 Mercedes Turbo Diesel	DGJ = Transmission-5-Spd. Automatic,W5A580

Front Seat - Attaching Parts
Figure IVA-525

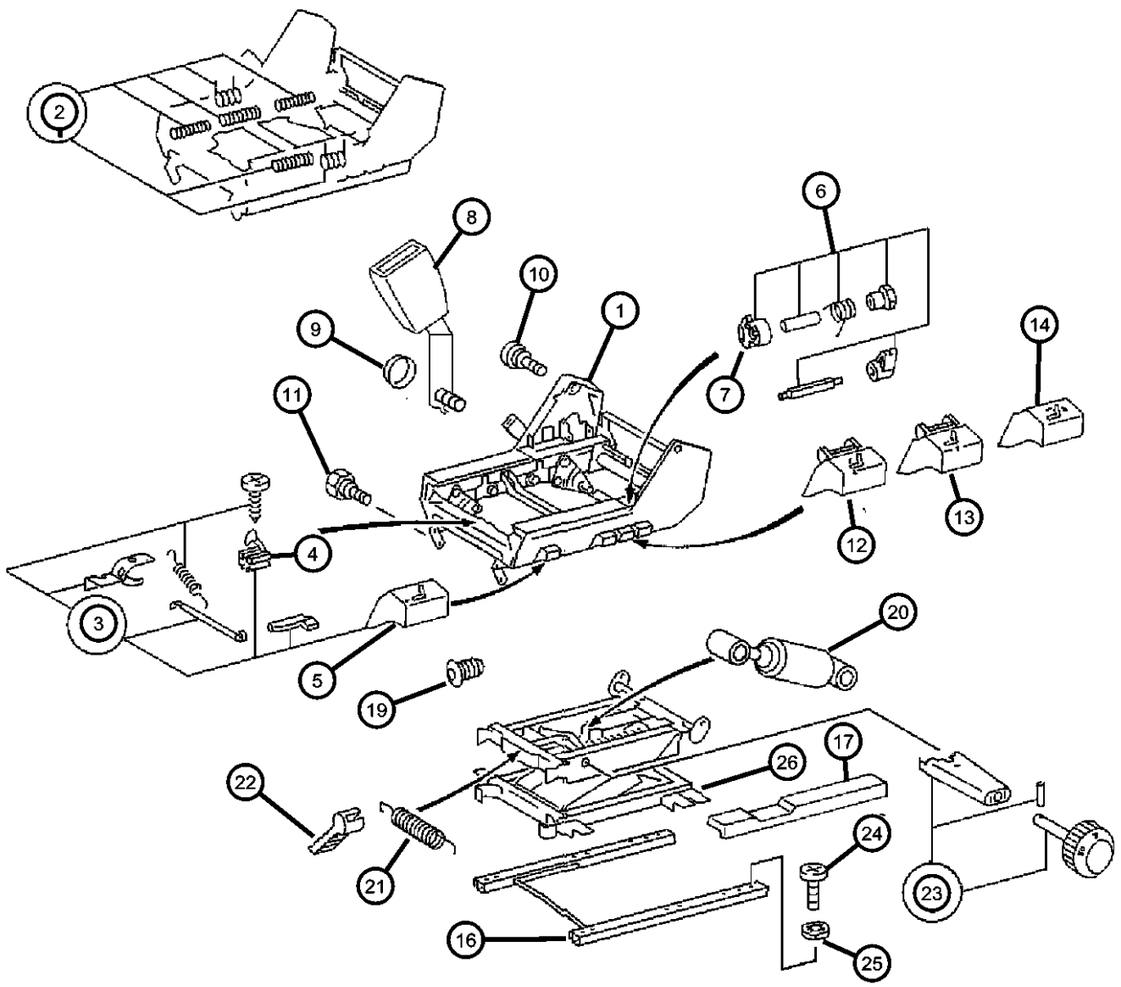

ITEM	PART NUMBER	QTY	LINE	SERIES	BODY	ENGINE	TRANS	TRIM	DESCRIPTION
	05133269AA	1	3, 7	L	12, 15, 16				
		1	2, 6	L	01, 02, 06				
		1	2, 6	L	11, 12, 14, 15, 16				
		1	2, 6	L	51, 52, 54, 55, 56				
8		1							SEAT BELT, Front, For Part Numbers See III 710, (NOT SERVICED)
9									CAP, Screw Cover
	05125999AA	1	2, 6	L	11, 12, 14, 15, 16				
		1	2, 6	L	51, 52, 54, 55, 56				
		1	3, 7	L	12, 15, 16				
		1	2, 6	L	01, 02, 06				
10									BOLT, Pivot
	05133219AA	2	3, 7	L	12, 15, 16				
		2	2, 6	L	01, 02, 06				
		2	2, 6	L	11, 12, 14, 15, 16				
		2	2, 6	L	51, 52, 54, 55, 56				
11									BOLT, Seat
	05133220AA	2	2, 6	L	01, 02, 06				
		2	2, 6	L	11, 12, 14, 15, 16				
		2	2, 6	L	51, 52, 54, 55, 56				
		2	3, 7	L	12, 15, 16				
12									HANDLE, Seat Adjuster
	0ZN44TE4AA	1	2, 6	L	01, 02, 06			-AA	Seat Cushion Depth, Drivers Side

SPRINTER (VA)

SERIES	LINE	BODY	ENGINE	TRANSMISSION
L = LOWLINE	3 = HD DODGE 2WD 6 = Lt. Duty DODGE 4WD 2 = Med. Duty DODGE 2WD 7 = Med. Duty DODGE 4WD	55 = Wagon 140" 54 = Wagon 118" 52 = Wagon 140" 51 = Wagon 118" 12 = Van 140" 11 = Van 118" 06 = Front Section 158" 14 = Van 118" 15 = Van 140" 16 = Van 158" 56 = Wagon 158" 01 = Chassis Forward Control 118" 02 = Chassis Forward Control 140"	EX8 = Engine-2.7L I5 Mercedes Turbo Diesel	DGJ = Transmission-5-Spd. Automatic,W5A580

Front Seat - Attaching Parts
Figure IVA-525

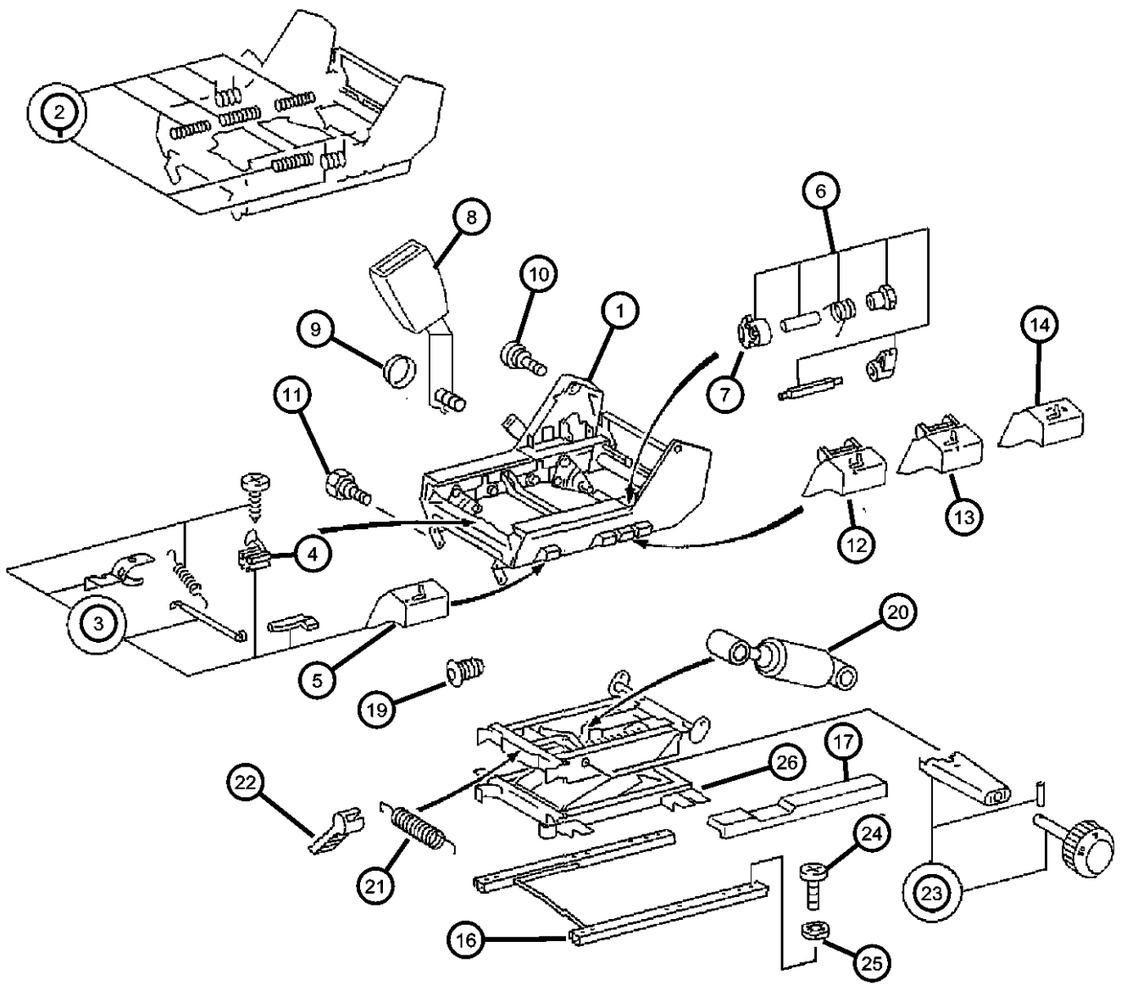

ITEM	PART NUMBER	QTY	LINE	SERIES	BODY	ENGINE	TRANS	TRIM	DESCRIPTION
		1	2, 6	L	11, 12, 14, 15, 16			-AA	Seat Cushion Depth, Drivers Side
		1	2, 6	L	51, 52, 54, 55, 56			-AA	Seat Cushion Depth, Drivers Side
		1	3, 7	L	12, 15, 16			-AA	Seat Cushion Depth, Drivers Side
	0ZN45TE4AA	1	2, 6	L	01, 02, 06			-AA	Raises Front of Cushion, Drivers Side
		1	2, 6	L	11, 12, 14, 15, 16			-AA	Raises Front of Cushion, Drivers Side
		1	2, 6	L	51, 52, 54, 55, 56			-AA	Raises Front of Cushion, Drivers Side
		1	3, 7	L	12, 15, 16			-AA	Raises Front of Cushion, Drivers Side
	0ZN49TE4AA	1	2, 6	L	01, 02, 06			-AA	Raises Front of Cushion, Passenger Side
		1	2, 6	L	11, 12, 14, 15, 16			-AA	Raises Front of Cushion, Passenger Side
		1	2, 6	L	51, 52, 54, 55, 56			-AA	Raises Front of Cushion, Passenger Side
		1	3, 7	L	12, 15, 16			-AA	Raises Front of Cushion, Passenger Side
	0ZN50TE4AA	1	2, 6	L	01, 02, 06			-AA	Raises Rear of Cushion, Passenger Side
		1	3, 7	L	12, 15, 16			-AA	Raises Rear of Cushion, Passenger Side
		1	2, 6	L	11, 12, 14, 15, 16			-AA	Raises Rear of Cushion, Passenger Side
		1	2, 6	L	51, 52, 54, 55, 56			-AA	Raises Rear of Cushion, Passenger Side
13									HANDLE, Seat Adjuster
	05133283AA	1	3, 7	L	12, 15, 16				Adjuster, Front, Cushion
	0ZN46TE4AA	1	2, 6	L	01, 02, 06			-AA	Raises Rear of Cushion, Drivers Side, Cushion
		1	2, 6	L	11, 12, 14, 15, 16			-AA	Raises Rear of Cushion, Drivers Side
		1	2, 6	L	51, 52, 54, 55, 56			-AA	Raises Rear of Cushion, Drivers Side

SPRINTER (VA)

SERIES	LINE	BODY	ENGINE	TRANSMISSION
L = LOWLINE	3 = HD DODGE 2WD 6 = Lt. Duty DODGE 4WD 2 = Med. Duty DODGE 2WD 7 = Med. Duty DODGE 4WD	55 = Wagon 140" 54 = Wagon 118" 52 = Wagon 140" 51 = Wagon 118" 12 = Van 140" 11 = Van 118" 06 = Front Section 158" 14 = Van 118" 15 = Van 140" 16 = Van 158" 56 = Wagon 158" 01 = Chassis Forward Control 118" 02 = Chassis Forward Control 140"	EX8 = Engine-2.7L I5 Mercedes Turbo Diesel	DGJ = Transmission-5-Spd. Automatic,W5A580

AR = use ase required - = Non illustrrated part

Front Seat - Attaching Parts
Figure IVA-525

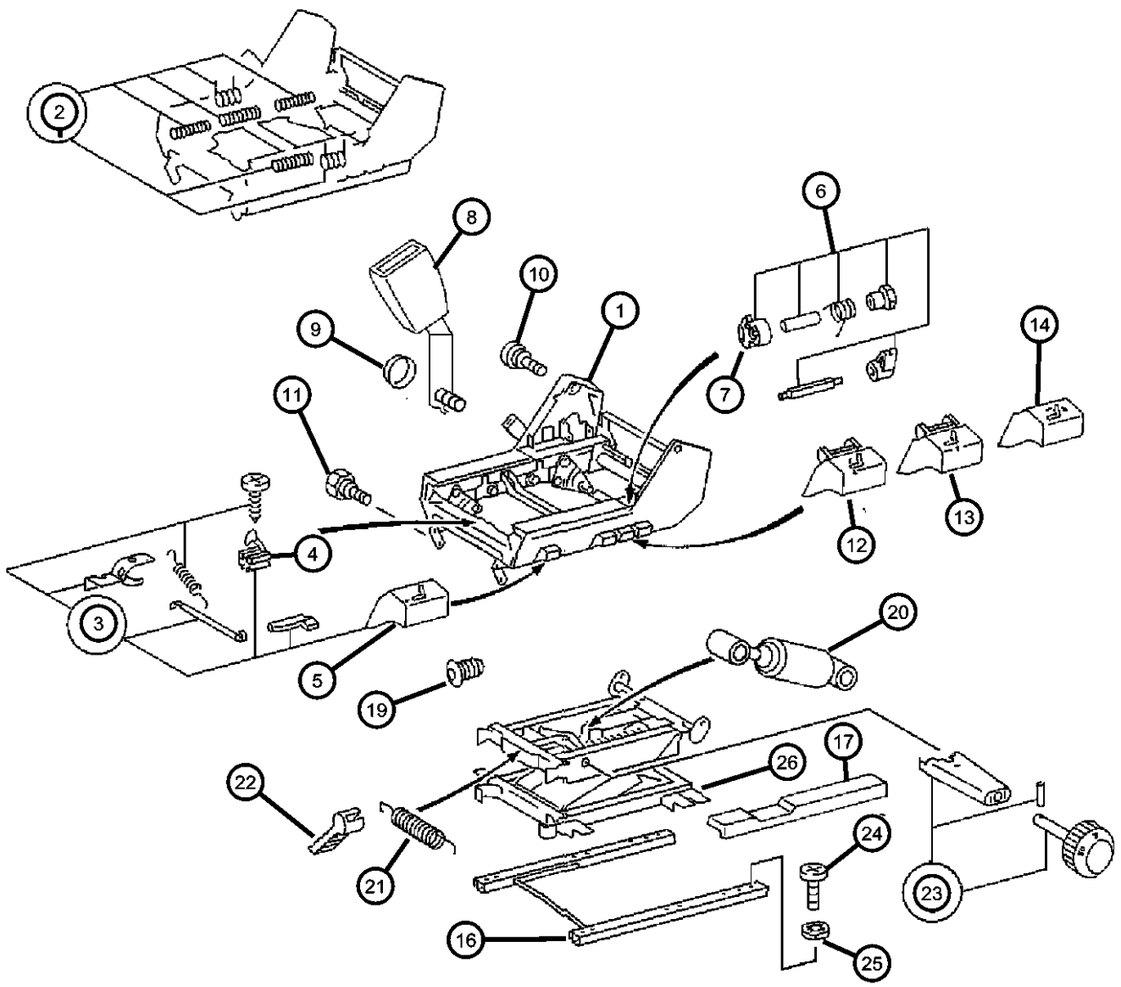

ITEM	PART NUMBER	QTY	LINE	SERIES	BODY	ENGINE	TRANS	TRIM	DESCRIPTION
		1	3, 7	L	12, 15, 16			-AA	Raises Rear of Cushion, Drivers Side
	0ZN50TE4AA	1	3, 7	L	12, 15, 16			-AA	Raises Rear of Cushion, Passenger Side
		1	2, 6	L	01, 02, 06			-AA	Raises Rear of Cushion, Passenger Side
		1	2, 6	L	11, 12, 14, 15, 16			-AA	Raises Rear of Cushion, Passenger Side
		1	2, 6	L	51, 52, 54, 55, 56			-AA	Raises Rear of Cushion, Passenger Side
14									HANDLE, Seat Recliner
	0ZN51TE4AA	1	2, 6	L	11, 12, 14, 15, 16				Passenger Side
		1	3, 7	L	12, 15, 16				Passenger Side
		1	2, 6	L	51, 52, 54, 55, 56				Passenger Side
-15									HANDLE, Recliner
	05103778AA	1	2, 6	L	01, 02, 06				
		1	2, 6	L	11, 12, 14, 15, 16				
		1	2, 6	L	51, 52, 54, 55, 56				
		1	3, 7	L	12, 15, 16				
16									TRACK, Seat Adjuster
	05103702AA	1	3, 7	L	12, 15, 16				
		1	2, 6	L	01, 02, 06				
		1	2, 6	L	11, 12, 14, 15, 16				
		1	2, 6	L	51, 52, 54, 55, 56				
17									COVER, Seat Adjuster
	05133224AA	1	2, 6	L	01, 02, 06				
		1	2, 6	L	11, 12, 14, 15, 16				

SPRINTER (VA)

SERIES	LINE	BODY	ENGINE	TRANSMISSION
L = LOWLINE	3 = HD DODGE 2WD 6 = Lt. Duty DODGE 4WD 2 = Med. Duty DODGE 2WD 7 = Med. Duty DODGE 4WD	55 = Wagon 140" 54 = Wagon 118" 52 = Wagon 140" 51 = Wagon 118" 12 = Van 140" 11 = Van 118" 06 = Front Section 158" 14 = Van 118" 15 = Van 140" 16 = Van 158" 56 = Wagon 158" 01 = Chassis Forward Control 118" 02 = Chassis Forward Control 140"	EX8 = Engine-2.7L I5 Mercedes Turbo Diesel	DGJ = Transmission-5-Spd. Automatic,W5A580

Front Seat - Attaching Parts
Figure IVA-525

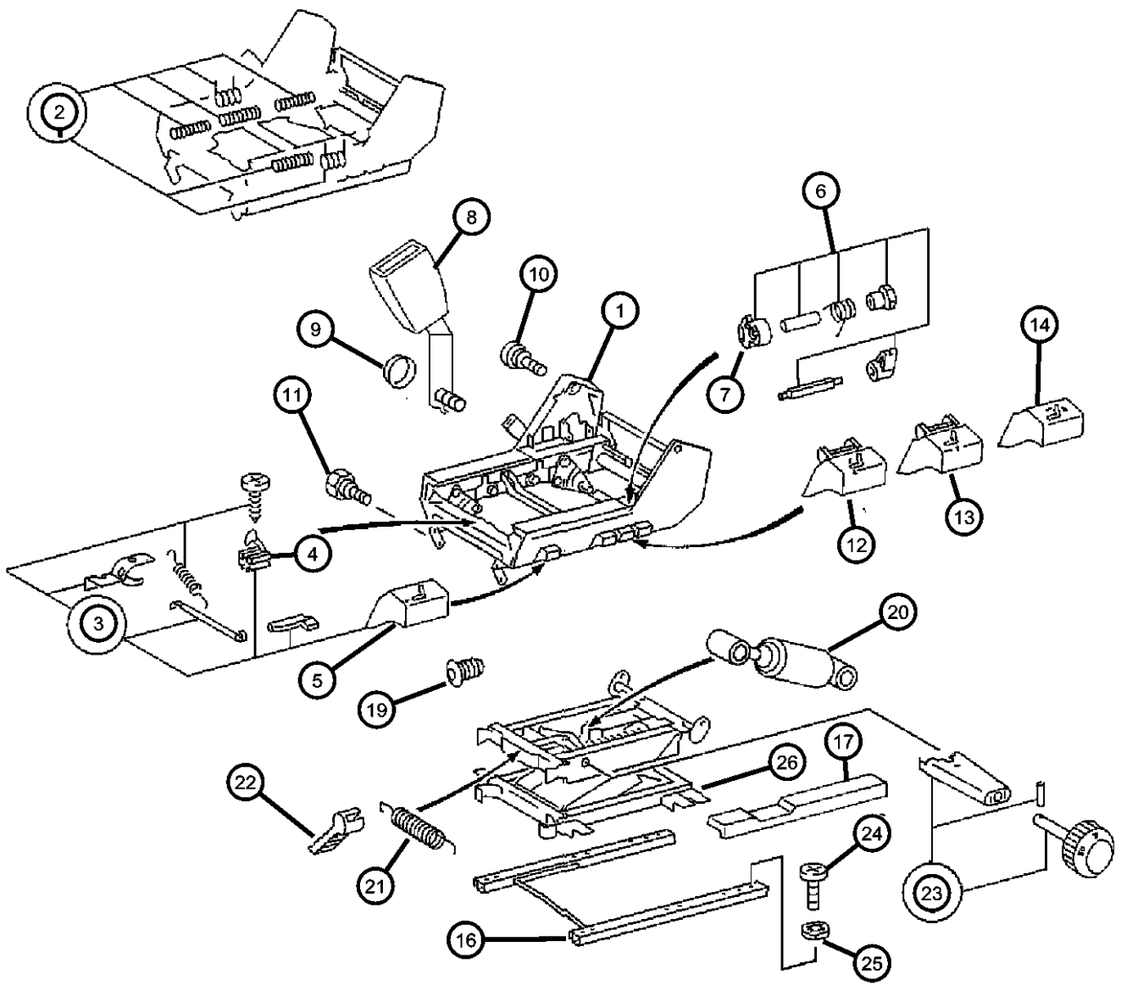

ITEM	PART NUMBER	QTY	LINE	SERIES	BODY	ENGINE	TRANS	TRIM	DESCRIPTION
		1	2, 6	L	51, 52, 54, 55, 56				
		1	3, 7	L	12, 15, 16				
-18									SHIELD, Seat Adjuster
	05133222AA	1	2, 6	L	01, 02, 06				
		1	2, 6	L	11, 12, 14, 15, 16				
		1	2, 6	L	51, 52, 54, 55, 56				
		1	3, 7	L	12, 15, 16				
19		1							PLUG, (NOT SERVICED)
20									ABSORBER
	05133483AA	1	2, 6	L	01, 02, 06				Seat Suspension
		1	2, 6	L	11, 12, 14, 15, 16				Seat Suspension
		1	2, 6	L	51, 52, 54, 55, 56				Seat Suspension
		1	3, 7	L	12, 15, 16				Seat Suspension
21		1							SPRING, (NOT SERVICED),
22		1							LEVER, (NOT SERVICED)
23		1							WHEEL, Hand, (NOT SERVICED)
24									SCREW, Seat
	05126139AA	6	2, 6	L	01, 02, 06				
		6	2, 6	L	11, 12, 14, 15, 16				
		6	2, 6	L	51, 52, 54, 55, 56				
		6	3, 7	L	12, 15, 16				
25									WASHER, Locking
	05125426AA	4	2, 6	L	11, 12, 14, 15, 16				
		4	2, 6	L	51, 52, 54, 55, 56				

SPRINTER (VA)

SERIES	LINE	BODY	ENGINE	TRANSMISSION
L = LOWLINE	3 = HD DODGE 2WD 6 = Lt. Duty DODGE 4WD 2 = Med. Duty DODGE 2WD 7 = Med. Duty DODGE 4WD	55 = Wagon 140" 54 = Wagon 118" 52 = Wagon 140" 51 = Wagon 118" 12 = Van 140" 11 = Van 118" 06 = Front Section 158" 14 = Van 118" 15 = Van 140" 16 = Van 158" 56 = Wagon 158" 01 = Chassis Forward Control 118" 02 = Chassis Forward Control 140"	EX8 = Engine-2.7L I5 Mercedes Turbo Diesel	DGJ = Transmission-5-Spd. Automatic,W5A580

Front Seat - Attaching Parts
Figure IVA-525

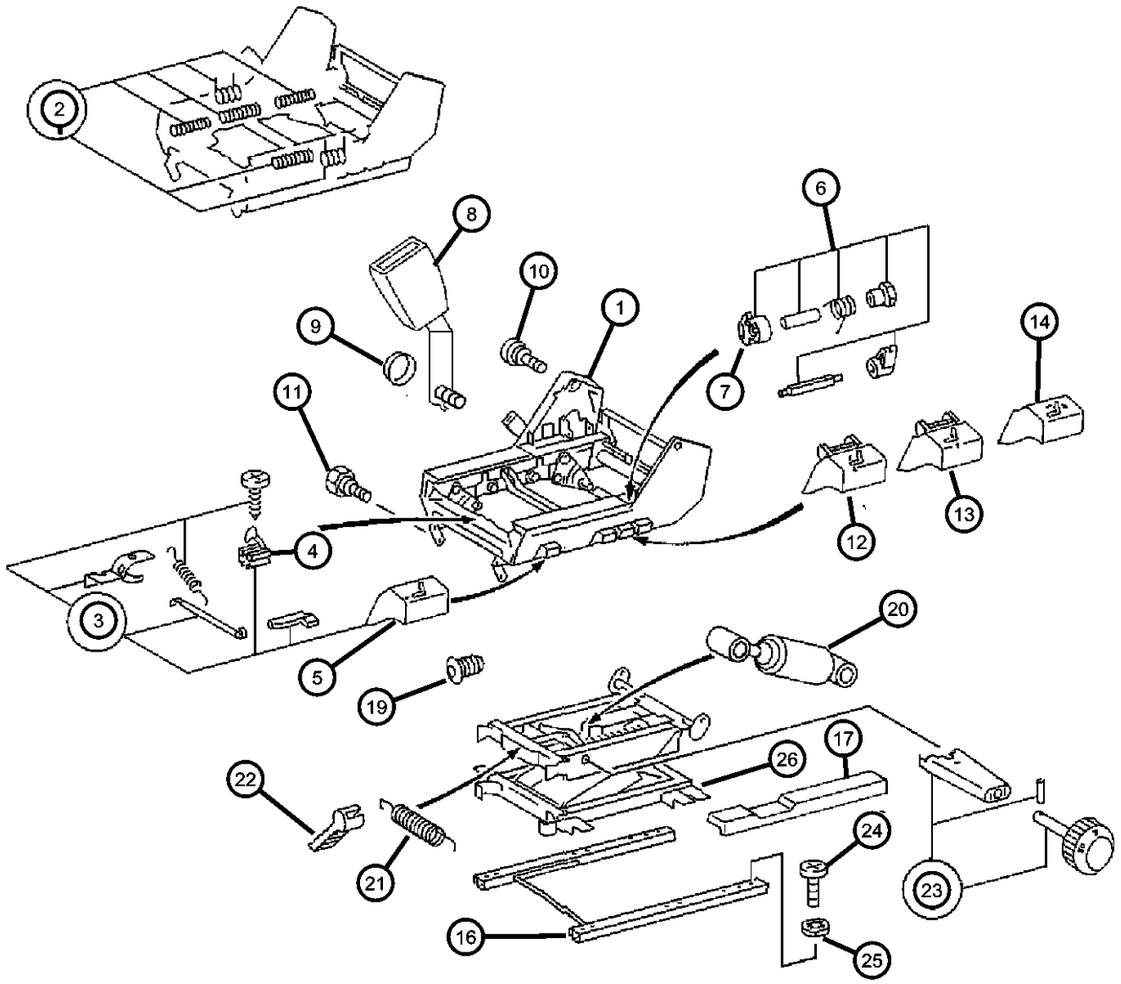

ITEM	PART NUMBER	QTY	LINE	SERIES	BODY	ENGINE	TRANS	TRIM	DESCRIPTION
		4	2, 6	L	01, 02, 06				
		4	3, 7	L	12, 15, 16				
26	05166120AA	1	2, 3, 6, 7	L					FRAME, Front Seat Cushion

SPRINTER (VA)

SERIES	LINE	BODY	ENGINE	TRANSMISSION
L = LOWLINE	3 = HD DODGE 2WD 6 = Lt. Duty DODGE 4WD 2 = Med. Duty DODGE 2WD 7 = Med. Duty DODGE 4WD	55 = Wagon 140" 54 = Wagon 118" 52 = Wagon 140" 51 = Wagon 118" 12 = Van 140" 11 = Van 118" 06 = Front Section 158" 14 = Van 118" 15 = Van 140" 16 = Van 158" 56 = Wagon 158" 01 = Chassis Forward Control 118" 02 = Chassis Forward Control 140"	EX8 = Engine-2.7L I5 Mercedes Turbo Diesel	DGJ = Transmission-5-Spd. Automatic,W5A580

AR = use ase required - = Non illustrrated part

Front Seat - Attaching Parts - Riser
Figure IVA-530

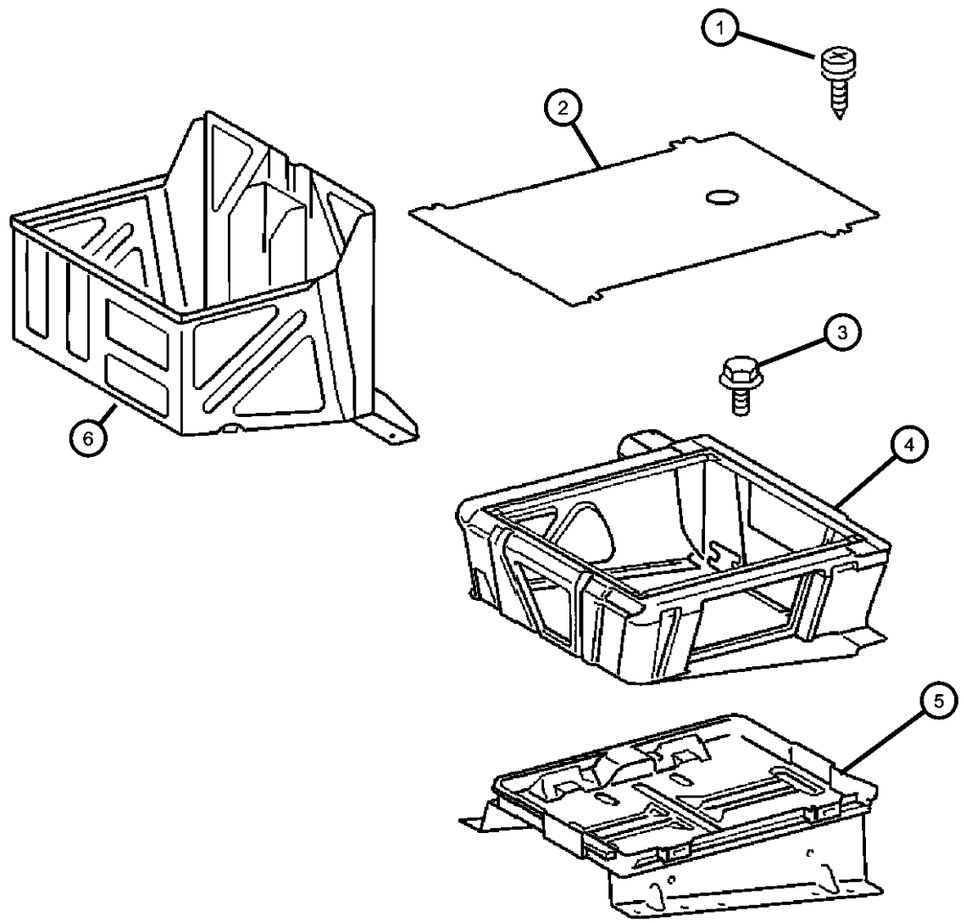

ITEM	PART NUMBER	QTY	LINE	SERIES	BODY	ENGINE	TRANS	TRIM	DESCRIPTION
1									SCREW, Tapping
	06104574AA	2	2, 6	L	11, 12, 14, 15, 16				
		2	2, 6	L	51, 52, 54, 55, 56				
		2	3, 7	L	12, 15, 16				
2									COVER
	05104234AA	1	2, 6	L	11, 12, 14, 15, 16				Seat Box
		1	2, 6	L	51, 52, 54, 55, 56				Seat Box
		1	3, 7	L	12, 15, 16				Seat Box
3									BOLT, Hex Head
	05126227AA	2	2, 6	L	01, 02, 06				
		2	2, 6	L	11, 12, 14, 15, 16				
		2	2, 6	L	51, 52, 54, 55, 56				
		2	3, 7	L	12, 15, 16				
4									RISER, Seat
	05122168AA	1	3, 7	L	12, 15, 16				With Aux. Battery (3500GVW)
	05122187AA	1	2, 6	L	11, 12, 14, 15, 16				Driver
		1	2, 6	L	51, 52, 54, 55, 56				Driver
		1	3, 7	L	12, 15, 16				Driver
	05122192AA	1	2, 6	L	11, 12, 14, 15, 16				Passenger
		1	2, 6	L	51, 52, 54, 55, 56				Passenger
		1	3, 7	L	12, 15, 16				Passenger
5									TRAY, Battery
	05122170AA	1	2, 6	L	11, 12, 14, 15, 16				With Aux. Battery (2500GVW)

SPRINTER (VA)

SERIES	LINE	BODY	ENGINE	TRANSMISSION
L = LOWLINE	3 = HD DODGE 2WD 6 = Lt. Duty DODGE 4WD 2 = Med. Duty DODGE 2WD 7 = Med. Duty DODGE 4WD	55 = Wagon 140" 54 = Wagon 118" 52 = Wagon 140" 51 = Wagon 118" 12 = Van 140" 11 = Van 118" 06 = Front Section 158" 14 = Van 118" 15 = Van 140" 16 = Van 158" 56 = Wagon 158" 01 = Chassis Forward Control 118" 02 = Chassis Forward Control 140"	EX8 = Engine-2.7L I5 Mercedes Turbo Diesel	DGJ = Transmission-5-Spd. Automatic,W5A580

Front Seat - Attaching Parts - Riser
Figure IVA-530

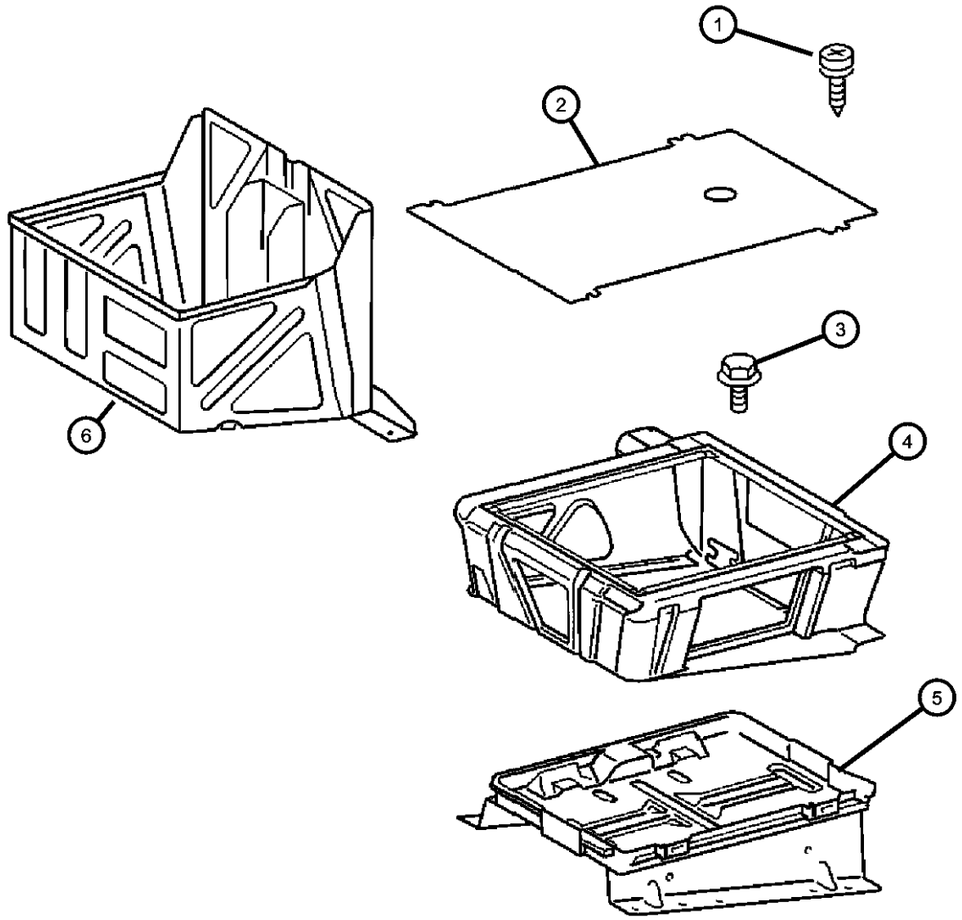

ITEM	PART NUMBER	QTY	LINE	SERIES	BODY	ENGINE	TRANS	TRIM	DESCRIPTION
	0VU01205								Repair Battery Terminal End Top Post (Ten Per Box)
	0VU01207								Repair Battery Terminal End Side Post (Ten Per Box)
		1	2, 6	L	51, 52, 54, 55, 56				With Aux. Battery (2500GVW)
	0VU01205								Repair Battery Terminal End Top Post (Ten Per Box)
	0VU01207								Repair Battery Terminal End Side Post (Ten Per Box)
		1	3, 7	L	12, 15, 16				With Aux. Battery (2500GVW)
	0VU01205								Repair Battery Terminal End Top Post (Ten Per Box)
	0VU01207								Repair Battery Terminal End Side Post (Ten Per Box)
6		1							BOX, Riser, (NOT SERVICED),

SPRINTER (VA)

SERIES	LINE	BODY	ENGINE	TRANSMISSION
L = LOWLINE	3 = HD DODGE 2WD 6 = Lt. Duty DODGE 4WD 2 = Med. Duty DODGE 2WD 7 = Med. Duty DODGE 4WD	55 = Wagon 140" 54 = Wagon 118" 52 = Wagon 140" 51 = Wagon 118" 12 = Van 140" 11 = Van 118" 06 = Front Section 158" 14 = Van 118" 15 = Van 140" 16 = Van 158" 56 = Wagon 158" 01 = Chassis Forward Control 118" 02 = Chassis Forward Control 140"	EX8 = Engine-2.7L I5 Mercedes Turbo Diesel	DGJ = Transmission-5-Spd. Automatic,W5A580

AR = use ase required - = Non illustrrated part

Front Seat - Attaching Parts
Figure IVA-535

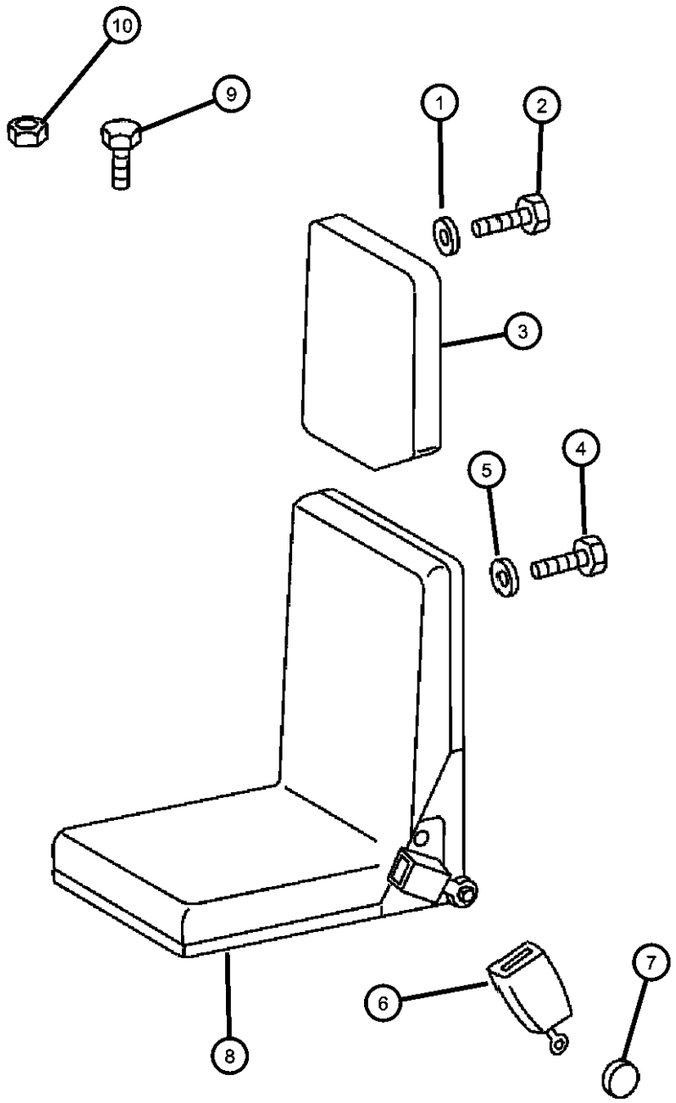

ITEM	PART NUMBER	QTY	LINE	SERIES	BODY	ENGINE	TRANS	TRIM	DESCRIPTION
1									WASHER, Flat
	05098108AA	1	2, 6	L	11, 12, 14, 15, 16				
		1	2, 6	L	51, 52, 54, 55, 56				
		1	3, 7	L	12, 15, 16				
2									SCREW
	06104025AA	4	2, 6	L	11, 12, 14, 15, 16				
		4	2, 6	L	51, 52, 54, 55, 56				
		1	3, 7	L	12, 15, 16				
3	05104535AA	1	3, 7	L	12, 15, 16				HEADREST, Front
4									SCREW
	06104049AA	6	2, 6	L	11, 12, 14, 15, 16				
		6	2, 6	L	54, 55, 56, 51, 52				
		2	3, 7	L	12, 15, 16				
5									WASHER, Flat
	05104641AA	2	2, 6	L	11, 12, 14, 15, 16				
		2	2, 6	L	51, 52, 54, 55, 56				
		2	3, 7	L	12, 15, 16				
6		2							SEAT BELT, See Ill 710 For Part Numbers, (NOT SERVICED)
7									CAP, Screw Cover
	05125999AA	1	2, 6	L	11, 12, 14, 15, 16				
		1	2, 6	L	51, 52, 54, 55, 56				
		1	3, 7	L	12, 15, 16				
8	05125327AA	1	3, 7	L					SEAT COMPLETE, Front
9									BOLT, Hex Head

SPRINTER (VA)

SERIES	LINE	BODY	ENGINE	TRANSMISSION
L = LOWLINE	3 = HD DODGE 2WD 6 = Lt. Duty DODGE 4WD 2 = Med. Duty DODGE 2WD 7 = Med. Duty DODGE 4WD	55 = Wagon 140" 54 = Wagon 118" 52 = Wagon 140" 51 = Wagon 118" 12 = Van 140" 11 = Van 118" 06 = Front Section 158" 14 = Van 118" 15 = Van 140" 16 = Van 158" 56 = Wagon 158" 01 = Chassis Forward Control 118" 02 = Chassis Forward Control 140"	EX8 = Engine-2.7L I5 Mercedes Turbo Diesel	DGJ = Transmission-5-Spd. Automatic,W5A580

Front Seat - Attaching Parts
Figure IVA-535

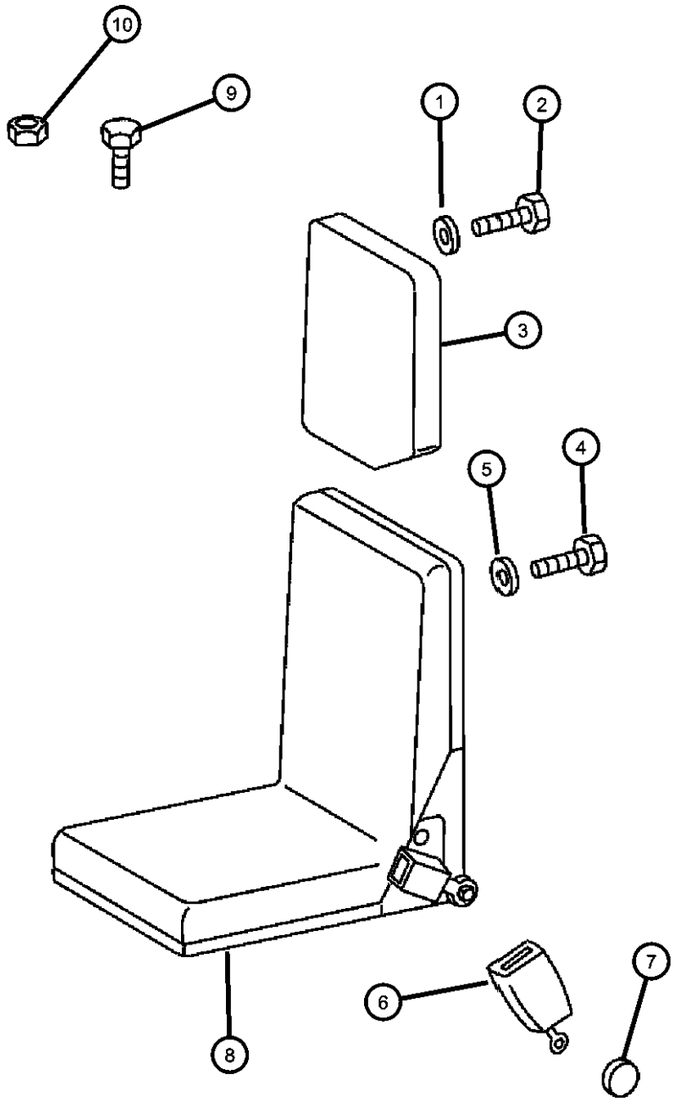

ITEM	PART NUMBER	QTY	LINE	SERIES	BODY	ENGINE	TRANS	TRIM	DESCRIPTION
	05103816AA	8	2, 6	L	51, 52, 54, 55, 56				
		8	2, 6	L	11, 12, 14, 15, 16				
		8	3, 7	L	12, 15				
10									NUT
	06104716AA	2	2, 6	L	11, 12, 14, 15, 16				
		8	2, 6	L	52, 54, 55, 56, 51				
		2	3, 7	L	12, 15, 16				

SPRINTER (VA)

SERIES	LINE	BODY	ENGINE	TRANSMISSION
L = LOWLINE	3 = HD DODGE 2WD 6 = Lt. Duty DODGE 4WD 2 = Med. Duty DODGE 2WD 7 = Med. Duty DODGE 4WD	55 = Wagon 140" 54 = Wagon 118" 52 = Wagon 140" 51 = Wagon 118" 12 = Van 140" 11 = Van 118" 06 = Front Section 158" 14 = Van 118" 15 = Van 140" 16 = Van 158" 56 = Wagon 158" 01 = Chassis Forward Control 118" 02 = Chassis Forward Control 140"	EX8 = Engine-2.7L I5 Mercedes Turbo Diesel	DGJ = Transmission-5-Spd. Automatic,W5A580

AR = use ase required - = Non illustrrated part

Rear Seat - 2 Passenger
Figure IVA-610

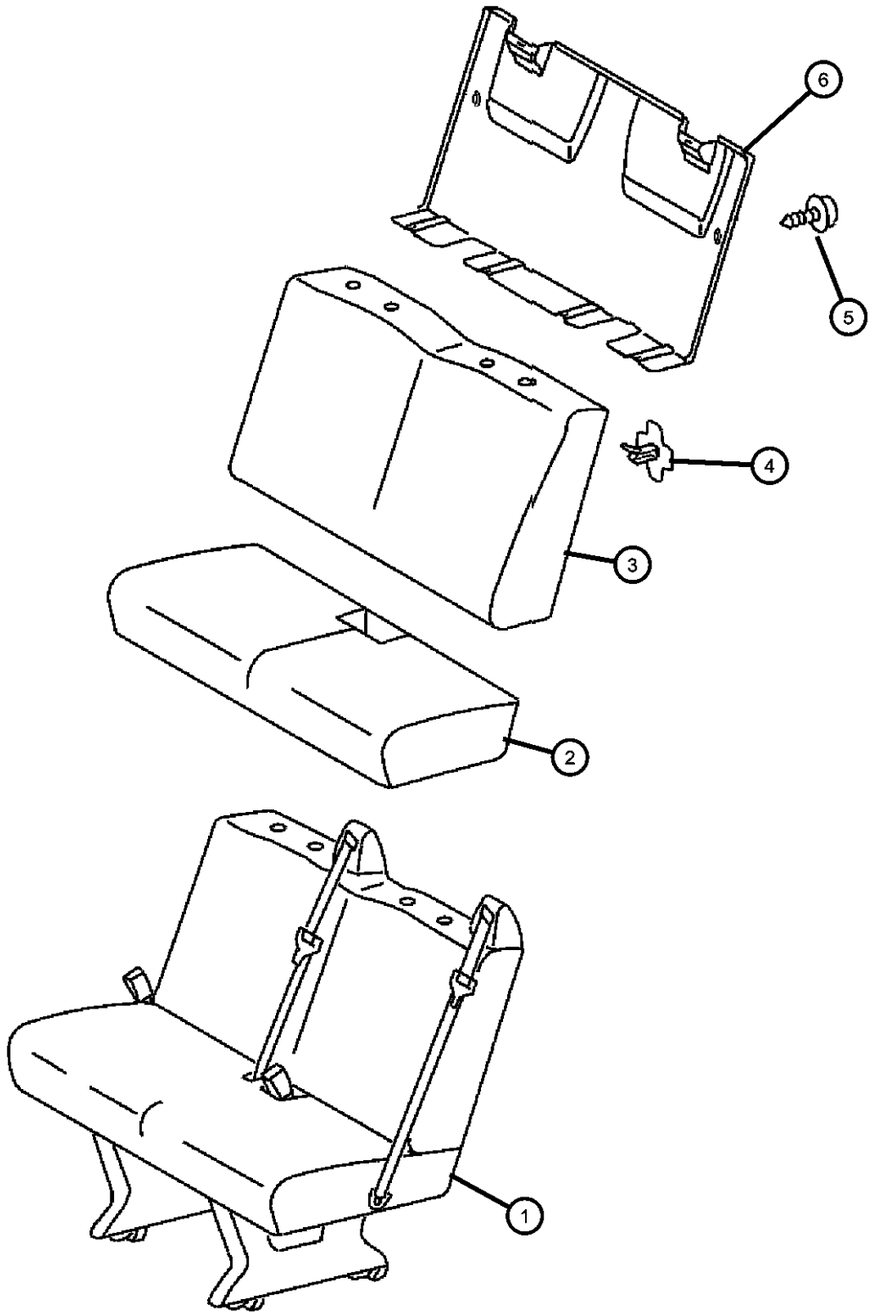

ITEM	PART NUMBER	QTY	LINE	SERIES	BODY	ENGINE	TRANS	TRIM	DESCRIPTION
1									SEAT COMPLETE, Rear, Two Passenger
	05133134AA	1	2, 6	L	51, 52, 54, 55, 56			*B7	
	05133138AA	1	2, 6	L	51, 52, 54, 55, 56			*C7	
2									CUSHION, Rear Seat, Two Passenger
	05134085AA	1	2, 3, 6, 7	L				*B7	
	05134610AA	1	2, 3, 6, 7	L				*C7	
3									SEAT BACK, Rear, 2 Passenger
	05134088AA	1	2, 3, 6, 7	L				*B7	
	05134611AA	1	2, 3, 6, 7	L				*C7	
4									BRACKET, Rear Seatback
	05103706AA	1	2, 6	L	11, 12, 14, 15, 16				Right
		1	2, 6	L	51, 52, 54, 55, 56				Right
		1	3, 7	L	12, 15, 16				Right
	05103707AA	1	3, 7	L	12, 15, 16				Left
		1	2, 6	L	11, 12, 14, 15, 16				Left
		1	2, 6	L	51, 52, 54, 55, 56				Left
5									PANEL, Rear Seat Back
	05134089AA	1	2, 6	L	11, 12, 14, 15, 16				Two Passenger
		1	2, 6	L	51, 52, 54, 55, 56				Two Passenger
		1	3, 7	L	12, 15, 16				Two Passenger
6									SCREW, Self-Tapping
	05133295AA	2	2, 6	L	01, 02, 06				

SPRINTER (VA)

SERIES	LINE	BODY	ENGINE	TRANSMISSION
L = LOWLINE	3 = HD DODGE 2WD 6 = Lt. Duty DODGE 4WD 2 = Med. Duty DODGE 2WD 7 = Med. Duty DODGE 4WD	55 = Wagon 140" 54 = Wagon 118" 52 = Wagon 140" 51 = Wagon 118" 12 = Van 140" 11 = Van 118" 06 = Front Section 158" 14 = Van 118" 15 = Van 140" 16 = Van 158" 56 = Wagon 158" 01 = Chassis Forward Control 118" 02 = Chassis Forward Control 140"	EX8 = Engine-2.7L I5 Mercedes Turbo Diesel	DGJ = Transmission-5-Spd. Automatic,W5A580

AR = use ase required - = Non illustrrated part

Rear Seat - 2 Passenger
Figure IVA-610

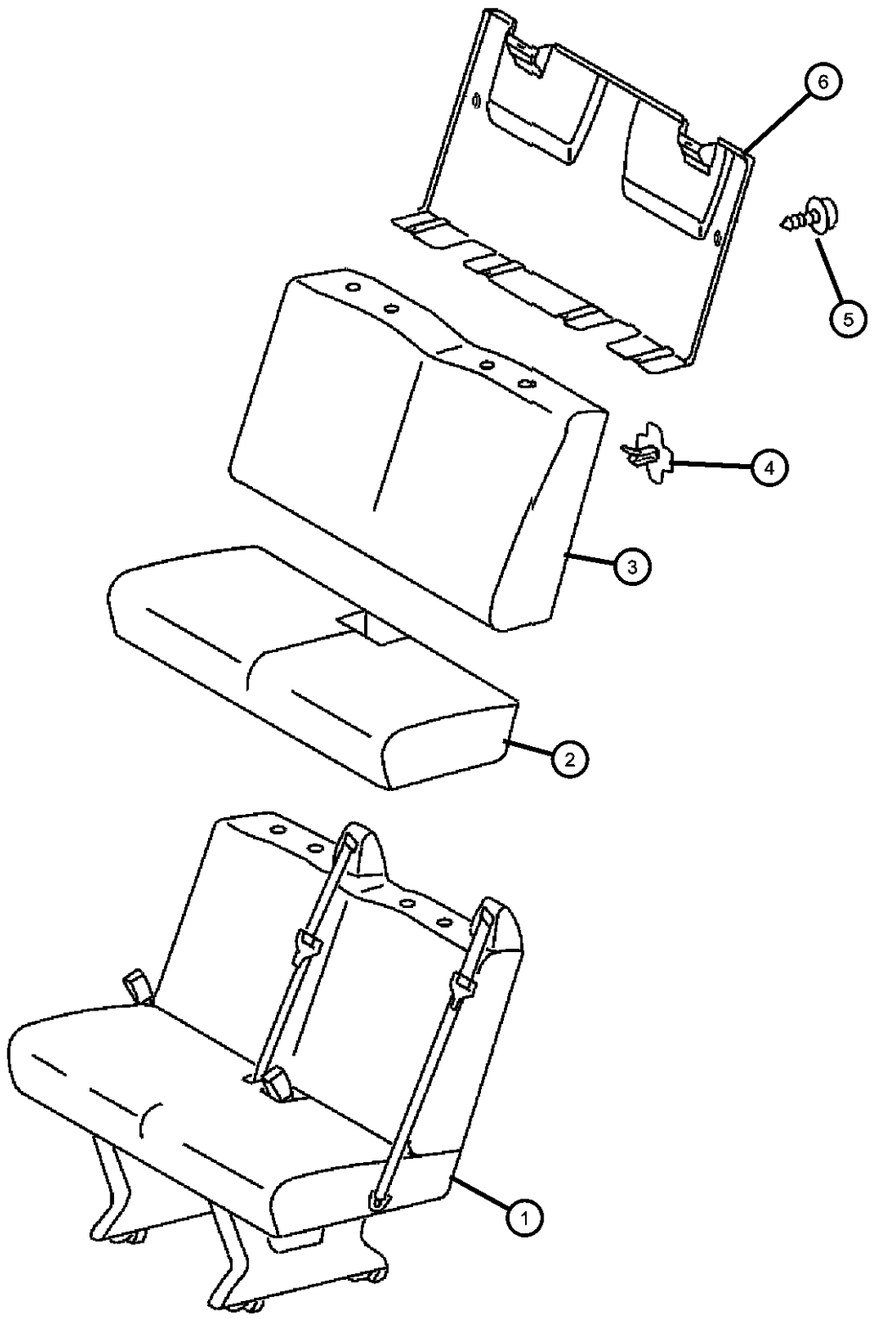

ITEM	PART NUMBER	QTY	LINE	SERIES	BODY	ENGINE	TRANS	TRIM	DESCRIPTION
		2	2, 6	L	16, 11, 12, 14, 15				
		2	2, 6	L	51, 52, 54, 55, 56				

SPRINTER (VA)

SERIES	LINE	BODY	ENGINE	TRANSMISSION
L = LOWLINE	3 = HD DODGE 2WD 6 = Lt. Duty DODGE 4WD 2 = Med. Duty DODGE 2WD 7 = Med. Duty DODGE 4WD	55 = Wagon 140" 54 = Wagon 118" 52 = Wagon 140" 51 = Wagon 118" 12 = Van 140" 11 = Van 118" 06 = Front Section 158" 14 = Van 118" 15 = Van 140" 16 = Van 158" 56 = Wagon 158" 01 = Chassis Forward Control 118" 02 = Chassis Forward Control 140"	EX8 = Engine-2.7L I5 Mercedes Turbo Diesel	DGJ = Transmission-5-Spd. Automatic,W5A580

AR = use ase required - = Non illustrrated part

Rear Seat - 3 Passenger
Figure IVA-615

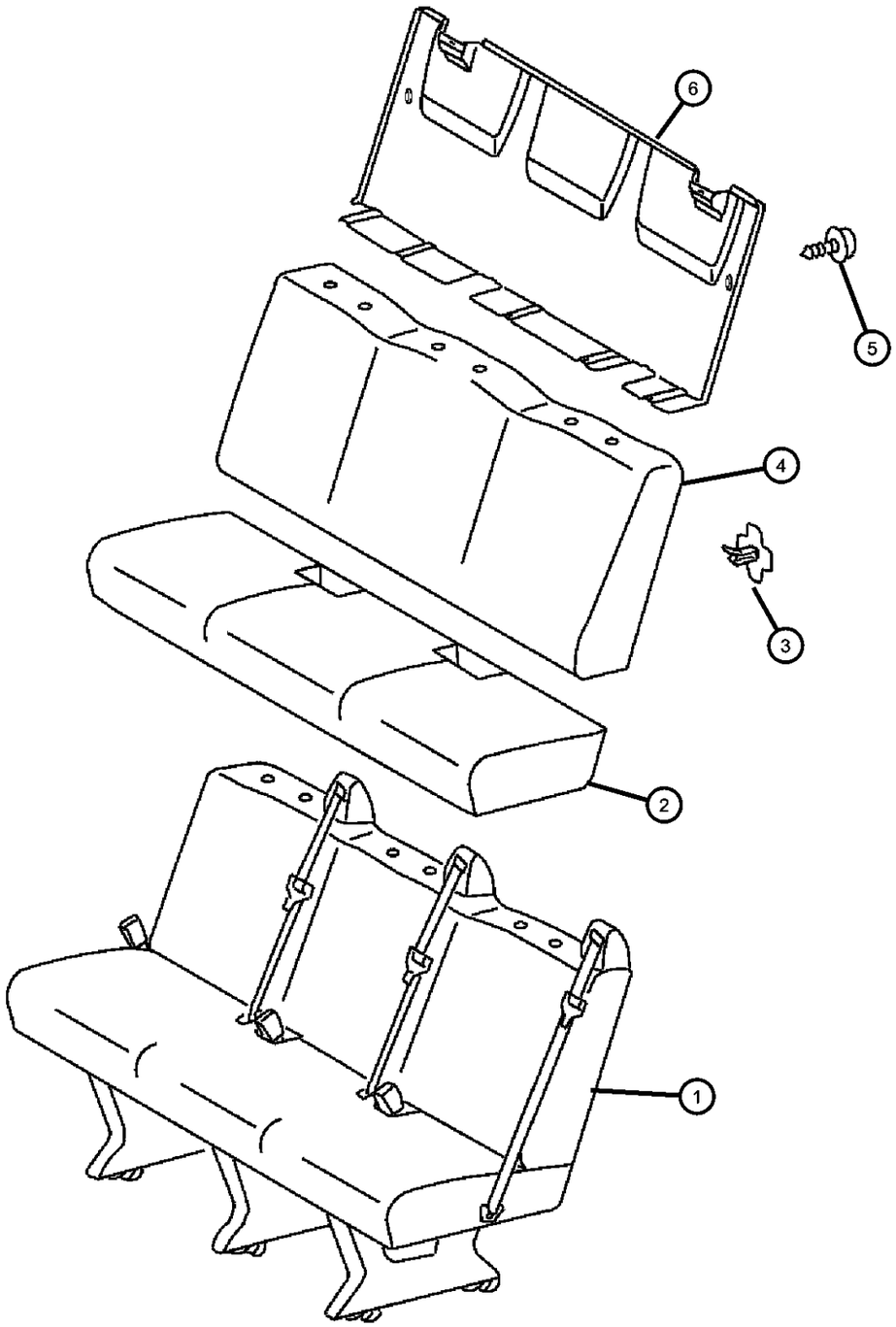

ITEM	PART NUMBER	QTY	LINE	SERIES	BODY	ENGINE	TRANS	TRIM	DESCRIPTION
1									SEAT COMPLETE, Rear, Three Passenger
	05133118AA	1	2, 6	L	11, 12, 14, 15, 16			*B7	First Rear Bench
		1	2, 6	L	51, 52, 54, 55, 56			*B7	First Rear Bench
	05133122AA	1	2, 6	L	11, 12, 14, 15, 16			*C7	First Rear Bench
		1	2, 6	L	51, 52, 54, 55, 56			*C7	First Rear Bench
	05133126AA	1	2, 6	L	51, 52, 54, 55, 56			*B7	Second Rear Bench
		1	2, 6	L	51, 52, 54, 55, 56			*B7	Third Rear Bench
	05133130AA	1	2, 6	L	51, 52, 54, 55, 56			*C7	Second Rear Bench
		1	2, 6	L	51, 52, 54, 55, 56			*C7	Third Rear Bench
2									CUSHION, Rear Seat, Three Passenger
	05134090AA	1	2, 3, 6, 7	L				*B7	First Rear Bench
	05134103AA	1	2, 3, 6, 7	L				*B7	Second & Third Row Rear Bench
	05134612AA	1	2, 3, 6, 7	L				*C7	First Rear Bench
	05134614AA	1	2, 3, 6, 7	L				*C7	Second & Third Row Rear Bench
3									BRACKET, Rear Seatback
	05103706AA	1	2, 6	L	51, 52, 54, 55, 56				Right
		1	3, 7	L	12, 15, 16				Right
	05103707AA	1	2, 6	L	11, 12, 14, 15, 16				Left
		1	2, 6	L	11, 12, 14, 15, 16				Right
		1	2, 6	L	51, 52, 54, 55, 56				Left
		1	3, 7	L	12, 15, 16				Left
4									SEAT BACK, Rear, 3 Passenger

SPRINTER (VA)

SERIES	LINE	BODY	ENGINE	TRANSMISSION
L = LOWLINE	3 = HD DODGE 2WD 6 = Lt. Duty DODGE 4WD 2 = Med. Duty DODGE 2WD 7 = Med. Duty DODGE 4WD	55 = Wagon 140" 54 = Wagon 118" 52 = Wagon 140" 51 = Wagon 118" 12 = Van 140" 11 = Van 118" 06 = Front Section 158" 14 = Van 118" 15 = Van 140" 16 = Van 158" 56 = Wagon 158" 01 = Chassis Forward Control 118" 02 = Chassis Forward Control 140"	EX8 = Engine-2.7L I5 Mercedes Turbo Diesel	DGJ = Transmission-5-Spd. Automatic,W5A580

AR = use ase required - = Non illustrrated part

Rear Seat - 3 Passenger
Figure IVA-615

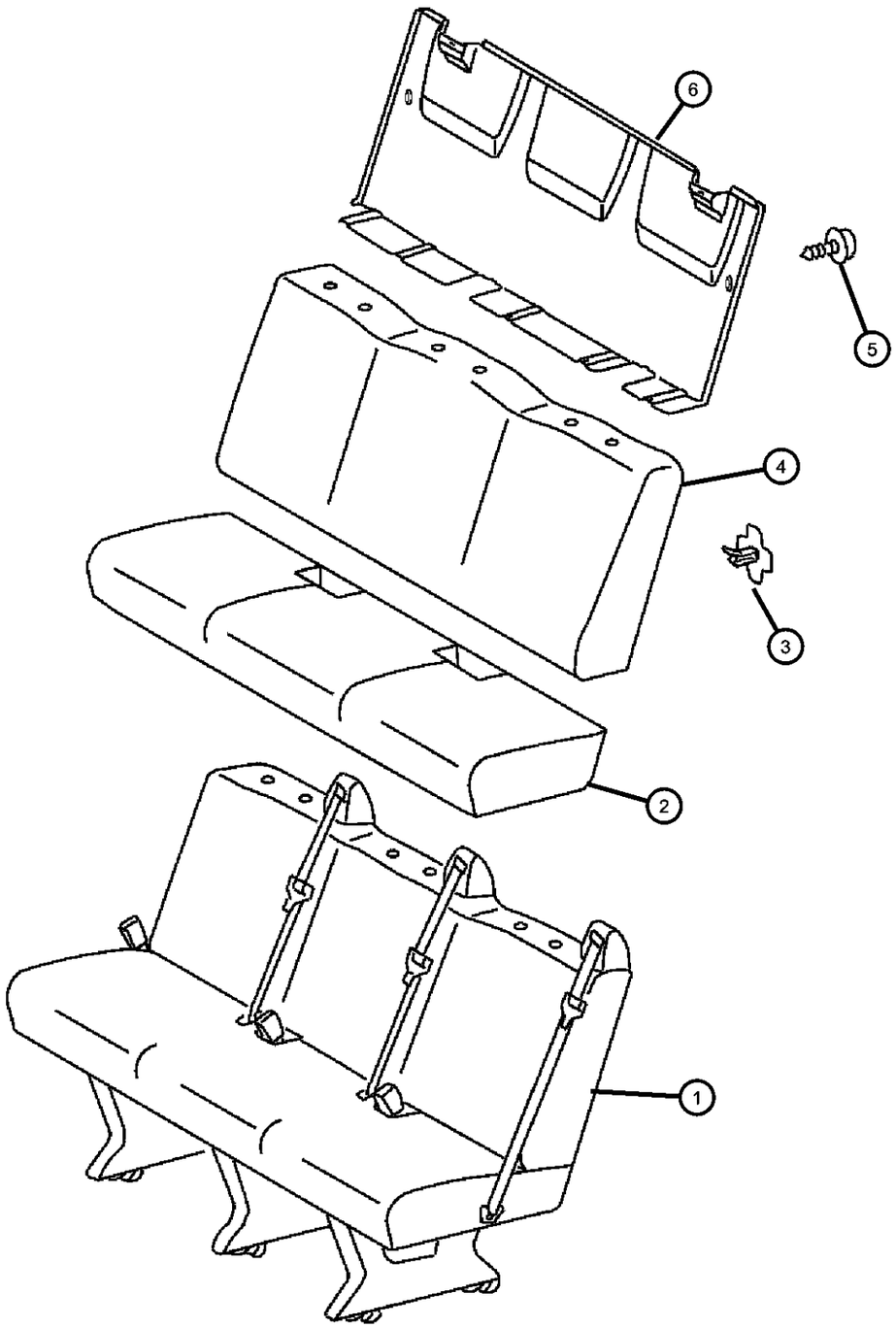

ITEM	PART NUMBER	QTY	LINE	SERIES	BODY	ENGINE	TRANS	TRIM	DESCRIPTION
	05134093AA	1	2, 3, 6, 7	L				*B7	First Rear Bench
	05134106AA	1	2, 3, 6, 7	L				*B7	Second & Third Row Rear Bench
	05134613AA	1	2, 3, 6, 7	L				*C7	First Rear Bench
	05134615AA	1	2, 3, 6, 7	L				*C7	Second & Third Row Rear Bench
5									SCREW, Self-Tapping
	05133295AA	2	2, 6	L	01, 02, 06				
		2	2, 6	L	11, 12, 14, 15, 16				
		2	2, 6	L	51, 52, 54, 55, 56				
6									PANEL, Seat Back, Three Passenger
	05134100AA	1	2, 6	L	11, 12, 14, 15, 16				
		1	2, 6	L	51, 52, 54, 55, 56				
		1	3, 7	L	12, 15, 16				

SPRINTER (VA)

SERIES	LINE	BODY	ENGINE	TRANSMISSION
L = LOWLINE	3 = HD DODGE 2WD 6 = Lt. Duty DODGE 4WD 2 = Med. Duty DODGE 2WD 7 = Med. Duty DODGE 4WD	55 = Wagon 140" 54 = Wagon 118" 52 = Wagon 140" 51 = Wagon 118" 12 = Van 140" 11 = Van 118" 06 = Front Section 158" 14 = Van 118" 15 = Van 140" 16 = Van 158" 56 = Wagon 158" 01 = Chassis Forward Control 118" 02 = Chassis Forward Control 140"	EX8 = Engine-2.7L I5 Mercedes Turbo Diesel	DGJ = Transmission-5-Spd. Automatic,W5A580

AR = use ase required - = Non illustrrated part

Attaching Parts - 3rd Passenger Seat
Figure IVA-620

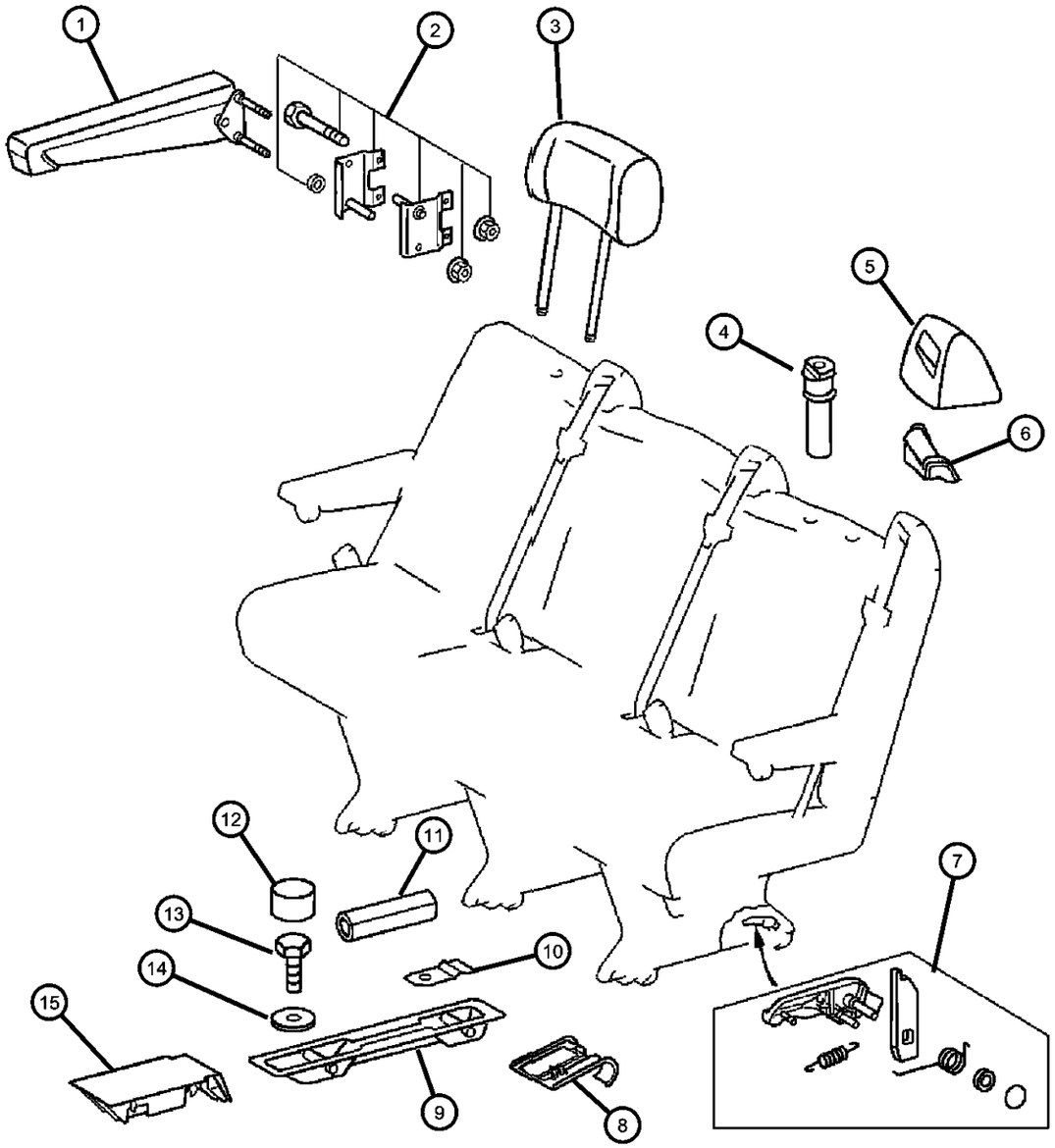

ITEM	PART NUMBER	QTY	LINE	SERIES	BODY	ENGINE	TRANS	TRIM	DESCRIPTION
1									ARMREST, REAR SEAT
	0ZN58CSSAA	1	2, 6	L	11, 12, 14, 15, 16			-AA	
		1	2, 6	L	51, 52, 54, 55, 56			-AA	
		1	3, 7	L	12, 15, 16			-AA	
2									BRACKET, Arm Rest
	05134098AA	1	2, 6	L	11, 12, 14, 15, 16				
		1	2, 6	L	51, 52, 54, 55, 56				
		1	3, 7	L	12, 15, 16				
3									HEADREST
	05104534AA	1	2, 6	L	11, 12, 14, 15, 16				Catano
		1	2, 6	L	51, 52, 54, 55, 56				Catano
		1	3, 7	L	12, 15, 16				Catano
	05125368AA	3	2, 6	L	11, 12, 14, 15, 16				Venice
		1	2, 6	L	51, 52, 54, 55, 56				Venice
		1	3, 7	L	12, 15, 16				Venice
	05125377AA	1	2, 6	L	11, 12, 14, 15, 16				Santos
		1	3, 7	L	12, 15, 16				Santos
		1	2, 6	L	51, 52, 54, 55, 56				Santos
4									SLEEVE, Headrest
	1AV08AA7AA	6	2, 6	L	11, 12, 14, 15, 16				
		2	2, 6	L	51, 52, 54, 55, 56				
		2	3, 7	L	12, 15, 16				
5									COVER, Seat Belt Opening

SPRINTER (VA)

SERIES	LINE	BODY	ENGINE	TRANSMISSION
L = LOWLINE	3 = HD DODGE 2WD 6 = Lt. Duty DODGE 4WD 2 = Med. Duty DODGE 2WD 7 = Med. Duty DODGE 4WD	55 = Wagon 140" 54 = Wagon 118" 52 = Wagon 140" 51 = Wagon 118" 12 = Van 140" 11 = Van 118" 06 = Front Section 158" 14 = Van 118" 15 = Van 140" 16 = Van 158" 56 = Wagon 158" 01 = Chassis Forward Control 118" 02 = Chassis Forward Control 140"	EX8 = Engine-2.7L I5 Mercedes Turbo Diesel	DGJ = Transmission-5-Spd. Automatic,W5A580

Attaching Parts - 3rd Passenger Seat
Figure IVA-620

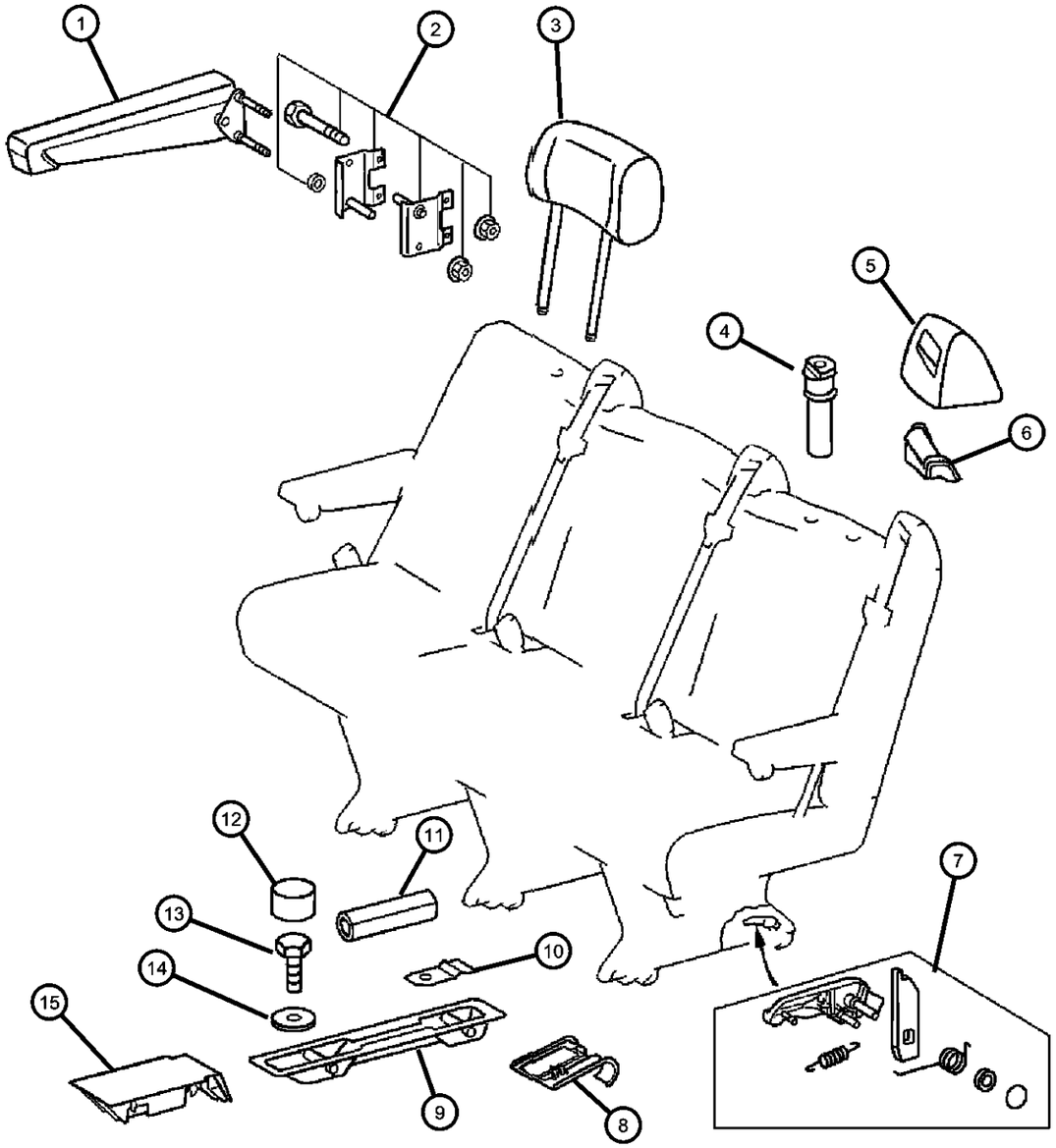

ITEM	PART NUMBER	QTY	LINE	SERIES	BODY	ENGINE	TRANS	TRIM	DESCRIPTION
	05103708AA	1	2, 6	L	11, 12, 14, 15, 16				
		1	2, 6	L	51, 52, 54, 55, 56				
		1	3, 7	L	12, 15, 16				
6									GUIDE, Seat Belt
	05103709AA	1	2, 6	L	11, 14, 15, 16, 12				
		1	2, 6	L	51, 52, 54, 55, 56				
		1	3, 7	L	12, 15, 16				
7									LATCH, Seat
	05103704AA	2	2, 6	L	11, 12, 14, 15, 16				
		2	2, 6	L	51, 52, 54, 55, 56				
		2	3, 7	L	12, 15, 16				
8									ESCUTCHEON, Seat Anchor
	05134099AA	4	2, 6	L	11, 12, 14, 15, 16				
		4	2, 6	L	51, 52, 54, 55, 56				
		4	3, 7	L	12, 15, 16				
9									ESCUTCHEON, Seat Anchor
	05104531AA	1	2, 6	L	51, 52, 54, 55, 56				Second Rear Bench, 2 Passenger
		1	2, 6	L	11, 12, 14, 15, 16				Second Rear Bench, 2 Passenger
		1	3, 7	L	12, 15, 16				Second Rear Bench, 2 Passenger
	05104532AA	2	2, 6	L	11, 12, 14, 15, 16				First Rear Bench, 3 Passenger
		1	2, 6	L	51, 52, 54, 55, 56				First Rear Bench, 3 Passenger
		1	3, 7	L	15, 16, 12				First Rear Bench, 3 Passenger

SPRINTER (VA)

SERIES	LINE	BODY	ENGINE	TRANSMISSION
L = LOWLINE	3 = HD DODGE 2WD 6 = Lt. Duty DODGE 4WD 2 = Med. Duty DODGE 2WD 7 = Med. Duty DODGE 4WD	55 = Wagon 140" 54 = Wagon 118" 52 = Wagon 140" 51 = Wagon 118" 12 = Van 140" 11 = Van 118" 06 = Front Section 158" 14 = Van 118" 15 = Van 140" 16 = Van 158" 56 = Wagon 158" 01 = Chassis Forward Control 118" 02 = Chassis Forward Control 140"	EX8 = Engine-2.7L I5 Mercedes Turbo Diesel	DGJ = Transmission-5-Spd. Automatic,W5A580

Attaching Parts - 3rd Passenger Seat
Figure IVA-620

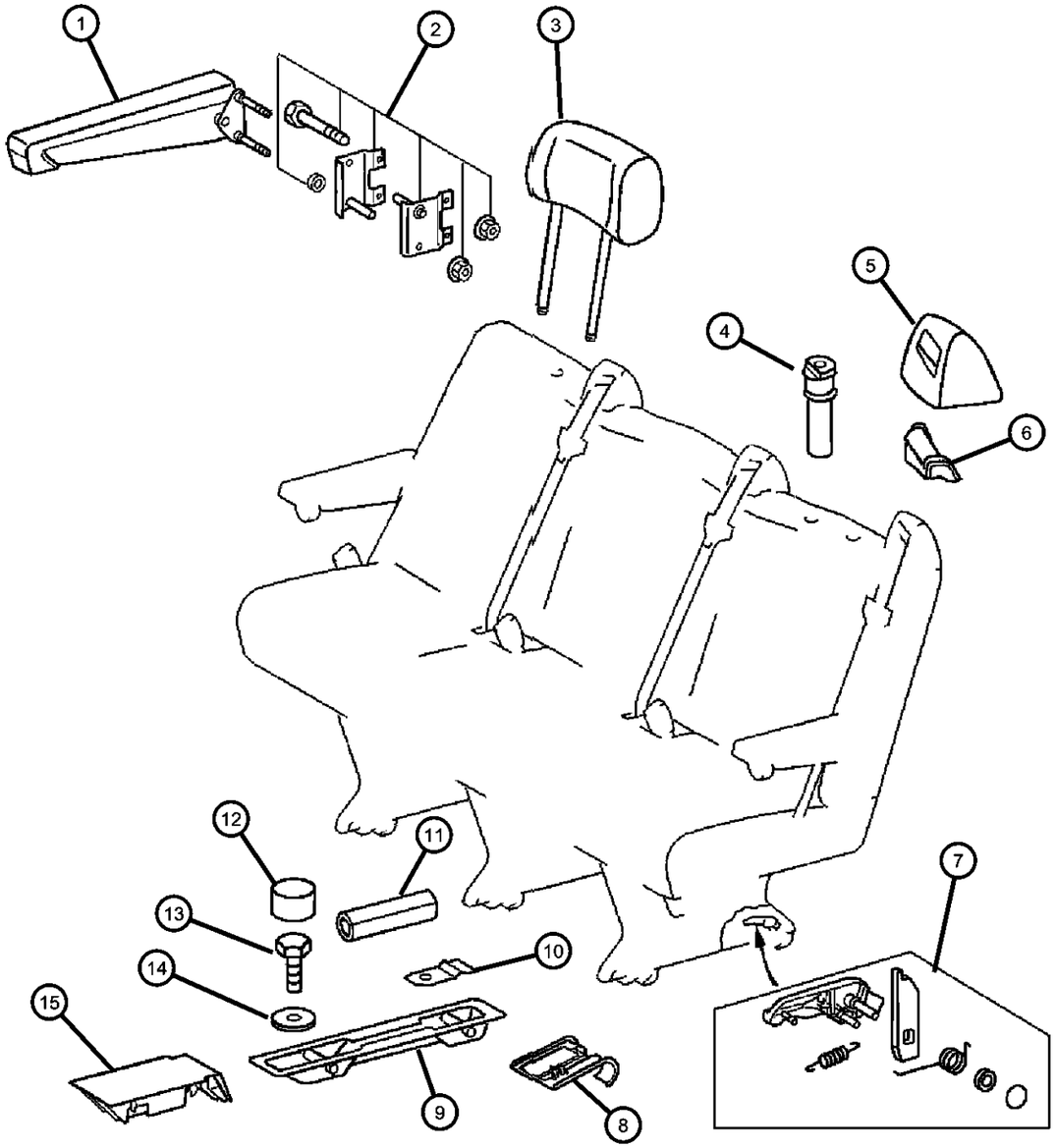

ITEM	PART NUMBER	QTY	LINE	SERIES	BODY	ENGINE	TRANS	TRIM	DESCRIPTION
10									SPRING, Seat Latch Return
	05134097AA	2	2, 6	L	11, 12, 14, 15, 16				
		2	2, 6	L	51, 52, 54, 55, 56				
		2	3, 7	L	12, 15, 16				
11									PIN, Roll
	05104550AA	2	2, 6	L	11, 12, 14, 15, 16				
		6	2, 6	L	51, 52, 54, 55, 56				
12									COVER, Seat Belt
	05133484AA	6	2, 6	L	11, 12, 14, 15, 16				
		6	2, 6	L	51, 52, 54, 55, 56				
		6	3, 7	L	12, 15, 16				
13									BOLT, Hex Head
	06104216AA	4	3, 7	L	02, 06				
		4	2, 6	L	11, 12, 14, 15, 16				
		4	2, 6	L	51, 52, 54, 55, 56				
		4	3, 7	L	12, 15, 16				
14									WASHER, Flat
	05126189AA	4	2, 6	L	15, 16, 11, 12, 14				
		4	2, 6	L	51, 52, 54, 55, 56				
		4	3, 7	L	12, 15, 16				
15									COVER, Seat Anchor
	05104533AA	1	2, 6	L	11, 12, 14, 15, 16				
		1	2, 6	L	51, 52, 54, 55, 56				

SPRINTER (VA)

SERIES	LINE	BODY	ENGINE	TRANSMISSION
L = LOWLINE	3 = HD DODGE 2WD 6 = Lt. Duty DODGE 4WD 2 = Med. Duty DODGE 2WD 7 = Med. Duty DODGE 4WD	55 = Wagon 140" 54 = Wagon 118" 52 = Wagon 140" 51 = Wagon 118" 12 = Van 140" 11 = Van 118" 06 = Front Section 158" 14 = Van 118" 15 = Van 140" 16 = Van 158" 56 = Wagon 158" 01 = Chassis Forward Control 118" 02 = Chassis Forward Control 140"	EX8 = Engine-2.7L I5 Mercedes Turbo Diesel	DGJ = Transmission-5-Spd. Automatic,W5A580

Attaching Parts - 3rd Passenger Seat
Figure IVA-620

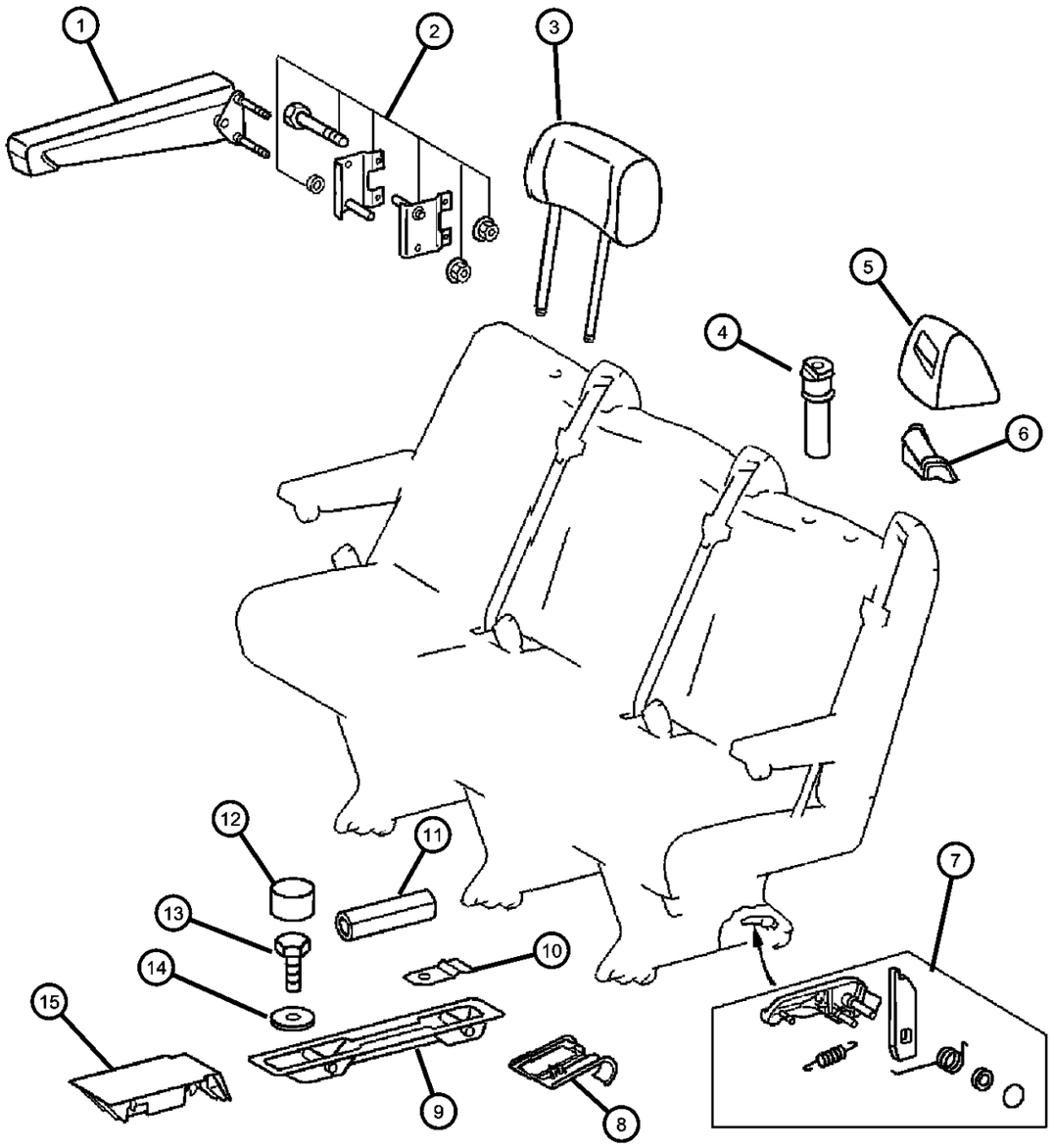

ITEM	PART NUMBER	QTY	LINE	SERIES	BODY	ENGINE	TRANS	TRIM	DESCRIPTION
		1	3, 7	L	12, 15, 16				
-16	05133285AA	1	3, 7	L	12, 15, 16				HANDLE, Seat Adjuster, Adjuster, Rear, Cushion

SPRINTER (VA)

SERIES	LINE	BODY	ENGINE	TRANSMISSION
L = LOWLINE	3 = HD DODGE 2WD 6 = Lt. Duty DODGE 4WD 2 = Med. Duty DODGE 2WD 7 = Med. Duty DODGE 4WD	55 = Wagon 140" 54 = Wagon 118" 52 = Wagon 140" 51 = Wagon 118" 12 = Van 140" 11 = Van 118" 06 = Front Section 158" 14 = Van 118" 15 = Van 140" 16 = Van 158" 56 = Wagon 158" 01 = Chassis Forward Control 118" 02 = Chassis Forward Control 140"	EX8 = Engine-2.7L I5 Mercedes Turbo Diesel	DGJ = Transmission-5-Spd. Automatic,W5A580

Seat Belt - Front
Figure IVA-710

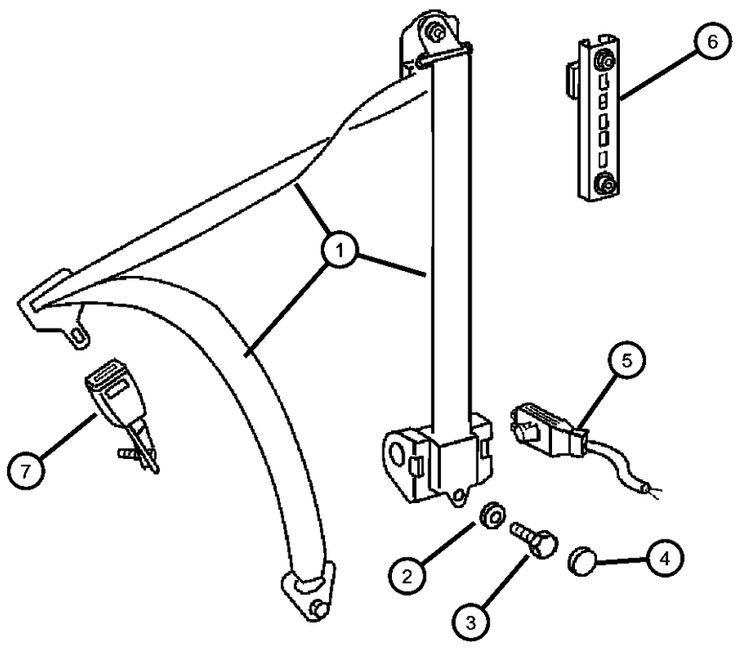

ITEM	PART NUMBER	QTY	LINE	SERIES	BODY	ENGINE	TRANS	TRIM	DESCRIPTION
1									SEAT BELT, Front Outer
	05103812AA	1	2, 6	L	01, 02, 06				Left
		1	2, 6	L	11, 12, 16, 14, 15				Left
		1	2, 6	L	51, 52, 54, 55, 56				Left
		1	3, 7	L	02, 06				Left
		1	3, 7	L	12, 15, 16				Left
	05103835AA	1	2, 6	L	01, 02, 06				Used without Jump Seat, Right
		1	2, 6	L	11, 12, 14, 15, 16				Used without Jump Seat, Right
		1	2, 6	L	51, 52, 54, 55, 56				Used without Jump Seat, Right
		1	3, 7	L	02, 06				Used without Jump Seat, Right
		1	3, 7	L	12, 15, 16				Used without Jump Seat, Right
	05103836AA	1	2, 6	L	11, 12, 14, 15, 16				Orange Seat Belts, Right & Left
		1	3, 7	L	12, 15, 16				Orange Seat Belts, Right & Left
	05125023AA	1	2, 6	L	11, 12, 14, 15, 16				Right
		1	3, 7	L	12, 15, 16				Right
	05125026AA	1	2, 6	L	01, 02, 06				Used with Jump Seat, Right
		1	2, 6	L	11, 12, 14, 15, 16				Used with Jump Seat, Right
		1	2, 6	L	51, 52, 54, 55, 56				Used with Jump Seat, Right
		1	3, 7	L	12, 15, 16				Used with Jump Seat, Right
2									WASHER, Seat Belt Attaching
	05125755AA	2	2, 6	L	11, 12, 14, 15, 16				
		2	2, 6	L	51, 52, 54, 55, 56				
		2	3, 7	L	12, 15, 16				
3									BOLT, Seat Belt

SPRINTER (VA)

SERIES	LINE	BODY	ENGINE	TRANSMISSION
L = LOWLINE	3 = HD DODGE 2WD 6 = Lt. Duty DODGE 4WD 2 = Med. Duty DODGE 2WD 7 = Med. Duty DODGE 4WD	55 = Wagon 140" 54 = Wagon 118" 52 = Wagon 140" 51 = Wagon 118" 12 = Van 140" 11 = Van 118" 06 = Front Section 158" 14 = Van 118" 15 = Van 140" 16 = Van 158" 56 = Wagon 158" 01 = Chassis Forward Control 118" 02 = Chassis Forward Control 140"	EX8 = Engine-2.7L I5 Mercedes Turbo Diesel	DGJ = Transmission-5-Spd. Automatic,W5A580

Seat Belt - Front
Figure IVA-710

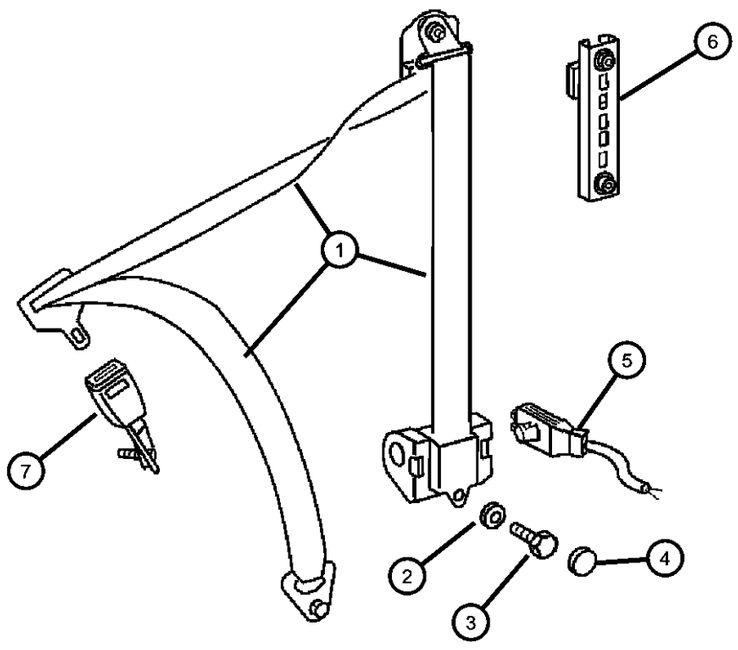

ITEM	PART NUMBER	QTY	LINE	SERIES	BODY	ENGINE	TRANS	TRIM	DESCRIPTION
	05125705AA	2	3, 7	L	12, 15, 16				
		2	2, 6	L	11, 12, 14, 15, 16				
		2	2, 6	L	51, 52, 54, 55, 56				
4									CAP, Screw Cover
	05125999AA	1	2, 6	L	11, 12, 14, 15, 16				
		1	2, 6	L	51, 52, 54, 55, 56				
		1	3, 7	L	12, 15, 16				
		1	2, 6	L	01, 02, 06				
5									HARNESS, Wiring
	05133485AA	2	2, 6	L	01, 02, 06				
		2	2, 6	L	11, 12, 14, 15, 16				
		2	2, 6	L	51, 52, 54, 55, 56				
		2	3, 7	L	12, 15, 16				
6									ADJUSTER, Seat Belt Turning Loop
	05104498AA	2	3, 7	L	12, 15, 16				
		2	2, 6	L	11, 12, 14, 15, 16				
		2	2, 6	L	51, 52, 54, 55, 56				
7									SEAT BELT, Buckle Half
	05103810AA	1	2, 6	L	01, 02, 06				Passenger Side
		1	2, 6	L	11, 12, 14, 15, 16				Passenger Side
		1	2, 6	L	51, 52, 54, 55, 56				Passenger Side
		1	3, 7	L	12, 15, 16				Passenger Side
	05103811AA	1	2, 6	L	11, 12, 14, 15, 16				Driver Side

SPRINTER (VA)

SERIES	LINE	BODY	ENGINE	TRANSMISSION
L = LOWLINE	3 = HD DODGE 2WD 6 = Lt. Duty DODGE 4WD 2 = Med. Duty DODGE 2WD 7 = Med. Duty DODGE 4WD	55 = Wagon 140" 54 = Wagon 118" 52 = Wagon 140" 51 = Wagon 118" 12 = Van 140" 11 = Van 118" 06 = Front Section 158" 14 = Van 118" 15 = Van 140" 16 = Van 158" 56 = Wagon 158" 01 = Chassis Forward Control 118" 02 = Chassis Forward Control 140"	EX8 = Engine-2.7L I5 Mercedes Turbo Diesel	DGJ = Transmission-5-Spd. Automatic,W5A580

Seat Belt - Front
Figure IVA-710

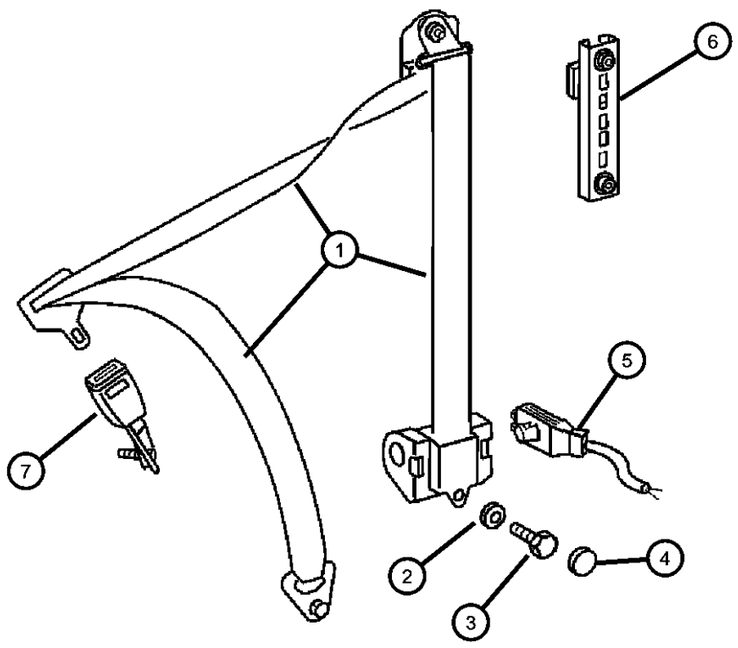

ITEM	PART NUMBER	QTY	LINE	SERIES	BODY	ENGINE	TRANS	TRIM	DESCRIPTION
		1	2, 6	L	51, 52, 54, 55, 56				Driver Side
		1	3, 7	L	12, 15, 16				Driver Side
	05124982AA	1	3, 7	L	12, 15, 16				With Luxury Bucket, Passenger Side
		1	2, 6	L	11, 12, 14, 15, 16				With Luxury Bucket, Passenger Side
		1	2, 6	L	51, 52, 54, 55, 56				With Luxury Bucket, Passenger Side
-8									SEAT BELT, Retractor
	05103834AA	3	2, 6	L	51, 52, 54, 55, 56				
	05125014AA	2	2, 6	L	11, 12, 14, 15, 16				

SPRINTER (VA)

SERIES	LINE	BODY	ENGINE	TRANSMISSION
L = LOWLINE	3 = HD DODGE 2WD 6 = Lt. Duty DODGE 4WD 2 = Med. Duty DODGE 2WD 7 = Med. Duty DODGE 4WD	55 = Wagon 140" 54 = Wagon 118" 52 = Wagon 140" 51 = Wagon 118" 12 = Van 140" 11 = Van 118" 06 = Front Section 158" 14 = Van 118" 15 = Van 140" 16 = Van 158" 56 = Wagon 158" 01 = Chassis Forward Control 118" 02 = Chassis Forward Control 140"	EX8 = Engine-2.7L I5 Mercedes Turbo Diesel	DGJ = Transmission-5-Spd. Automatic,W5A580

Seat Belt - Second Row
Figure IVA-720

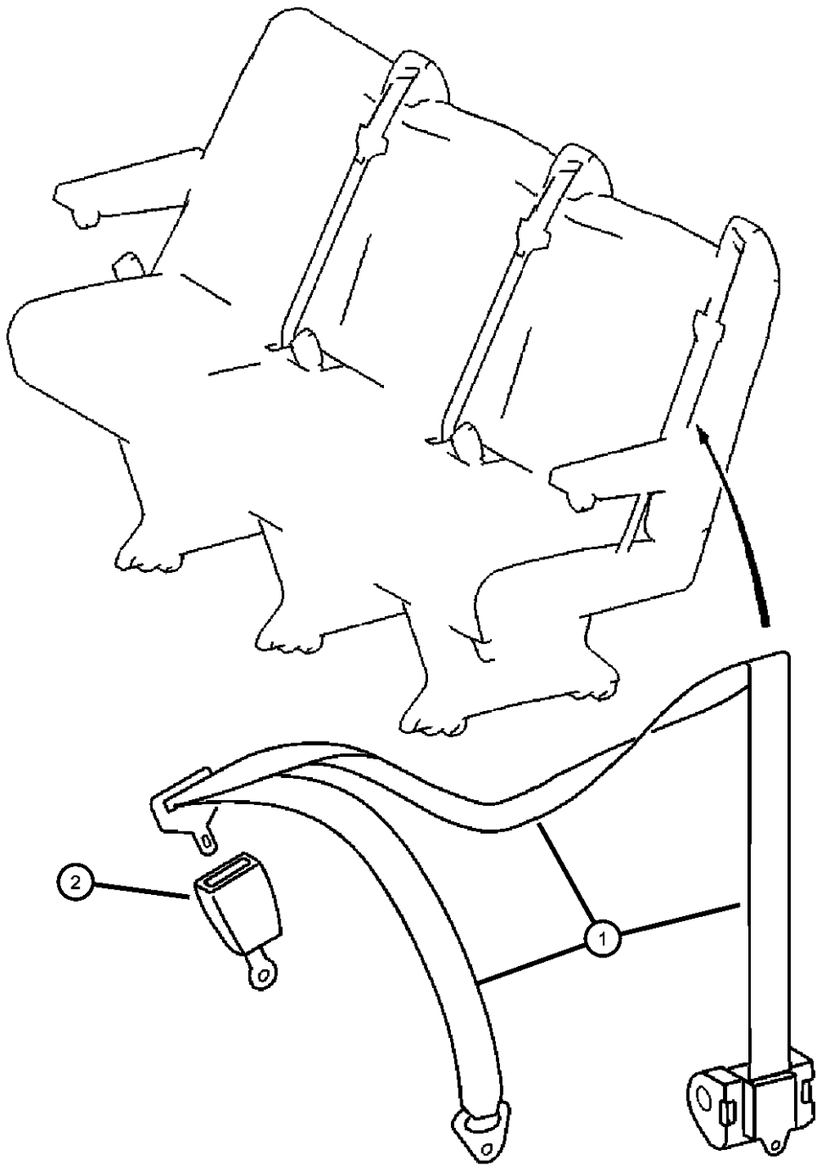

ITEM	PART NUMBER	QTY	LINE	SERIES	BODY	ENGINE	TRANS	TRIM	DESCRIPTION
1									SEAT BELT, Retractor
	05125014AA	2	2, 6	L	11, 12, 14, 15, 16				
		2	2, 6	L	51, 52, 54, 55, 56				
		2	3, 7	L	12, 15, 16				
2									SEAT BELT, Buckle Half
	05104502AA	2	2, 6	L	11, 12, 14, 15, 16				
		2	2, 6	L	51, 52, 54, 55, 56				
		2	3, 7	L	12, 15, 16				

SPRINTER (VA)

SERIES	LINE	BODY	ENGINE	TRANSMISSION
L = LOWLINE	3 = HD DODGE 2WD 6 = Lt. Duty DODGE 4WD 2 = Med. Duty DODGE 2WD 7 = Med. Duty DODGE 4WD	55 = Wagon 140" 54 = Wagon 118" 52 = Wagon 140" 51 = Wagon 118" 12 = Van 140" 11 = Van 118" 06 = Front Section 158" 14 = Van 118" 15 = Van 140" 16 = Van 158" 56 = Wagon 158" 01 = Chassis Forward Control 118" 02 = Chassis Forward Control 140"	EX8 = Engine-2.7L I5 Mercedes Turbo Diesel	DGJ = Transmission-5-Spd. Automatic,W5A580

AR = use ase required - = Non illustrrated part

Group - SVA

Body Sheet Metal Except Doors

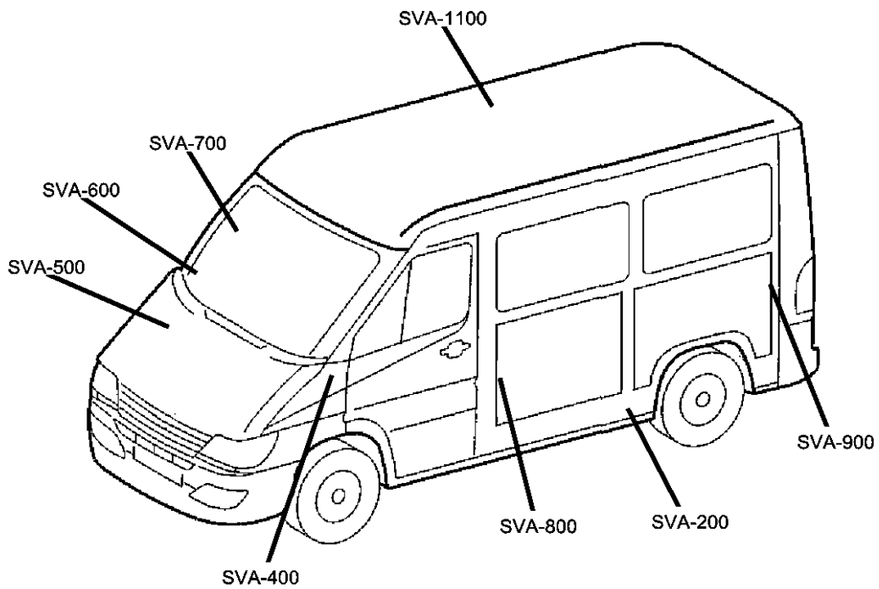

SVA-1100 Roof Panels 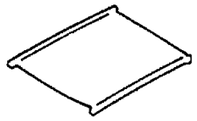	**SVA-1200** Sunroof 	**SVA-200** Floor Pans 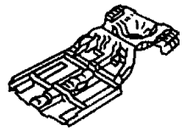	**SVA-300** Plugs
SVA-400 Front Fenders 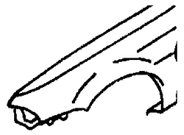	**SVA-500** Hood and Hood Release 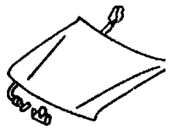	**SVA-600** Cowl and Dash Panel 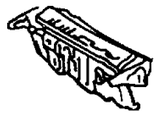	**SVA-700** Glass and Rear View MIrror 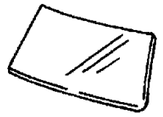
SVA-800 Aperture Panel 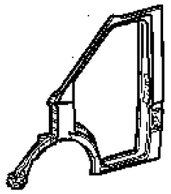	**SVA-900** Quarter Panel and Pillars 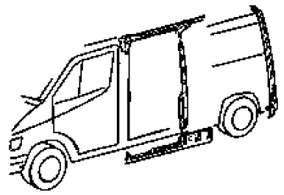		

Group - SVA Body Sheet Metal Except Doors

Illustration Title — Group-Fig. No.

Floor Pans
Front Floor Pan ..... Fig. SVA - 210
Rear Floor Pan ..... Fig. SVA - 220

Plugs
Plugs ..... Fig. SVA - 310

Front Fenders
Front Fender ..... Fig. SVA - 410
Fender Splash Guards ..... Fig. SVA - 420

Hood and Hood Release
Hood and Hood Release ..... Fig. SVA - 510

Cowl and Dash Panel
Cowl and Dash ..... Fig. SVA - 610
Inner Paneling in Cab, Cowl ..... Fig. SVA - 620

Glass and Rear View MIrror
Windshield, Backlite and Rear View Mirror ..... Fig. SVA - 710
Front Right Side Sliding Glass ..... Fig. SVA - 720
Side Glass, Fixed ..... Fig. SVA - 730

Aperture Panel
Front Aperture, Inner, Left ..... Fig. SVA - 810
Front Aperture, Outer, Left ..... Fig. SVA - 820
Front Aperture, Inner, Right ..... Fig. SVA - 830
Front Aperture, Outer, Right ..... Fig. SVA - 840

Quarter Panel and Pillars
Right Side Cargo Door Pillars & Wheelhouse ..... Fig. SVA - 910
Right Side Panels, Cargo ..... Fig. SVA - 920
Right Side Panels, Wagon ..... Fig. SVA - 930
Left Side Cargo Door Pillars & Wheelhouse ..... Fig. SVA - 940
Left Side Panels, Cargo ..... Fig. SVA - 950
Left Side Panels, Wagon ..... Fig. SVA - 960
Rear Splash Shield ..... Fig. SVA - 970
Rear Step Panel ..... Fig. SVA - 980
Partition Wall & Load Protection Grill ..... Fig. SVA - 990

Roof Panels
Low Roof Panel ..... Fig. SVA - 1110
High Roof Panel ..... Fig. SVA - 1120

Sunroof
Manual Sunroof ..... Fig. SVA - 1210
Fixed Sunroof ..... Fig. SVA - 1220

Front Floor Pan
Figure SVA-210

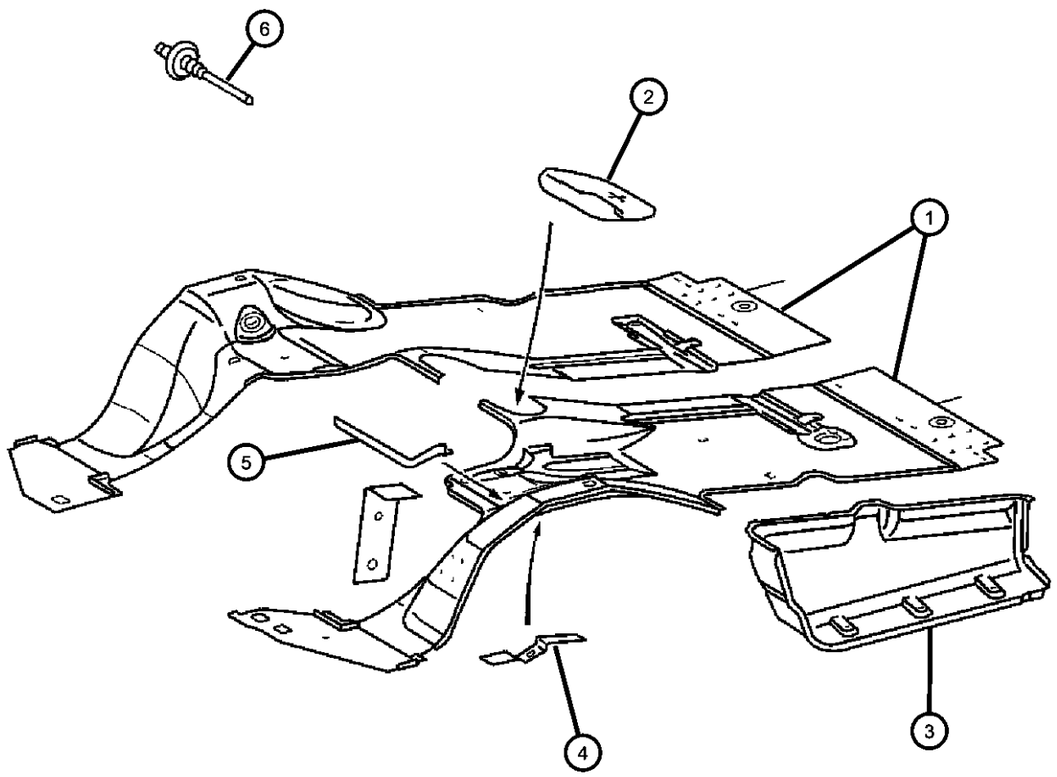

ITEM	PART NUMBER	QTY	LINE	SERIES	BODY	ENGINE	TRANS	TRIM	DESCRIPTION
1									PAD, Floor Pan
	05121511AB	1	2, 6		01, 02, 06				
		1	2, 6		11, 12, 14, 15, 16				
		1	2, 6		51, 52, 54, 55, 56				
		1	3, 7		12, 15, 16				
2									ESCUTCHEON, Floor
	05121510AA	1	2, 6		01, 02, 06				
		1	2, 6		11, 12, 14, 15, 16				
		1	2, 6		51, 52, 54, 55, 56				
		1	3, 7		12, 15, 16				
3									STEP PAD, Side Step
	05104161AA	1	2, 6		01, 02, 06				Left
		1	2, 6		11, 12, 14, 15, 16				Left
		1	2, 6		51, 52, 54, 55, 56				Left
		1	3, 7		12, 15, 16				Left
	05121571AA	1	2, 6		01, 02, 06				Right
		1	2, 6		11, 12, 14, 15, 16				Right
		1	2, 6		51, 52, 54, 55, 56				Right
		1	3, 7		12, 15, 16				Right
4									BRACKET, Floor Pan, Brake Cable
	05119269AA	1	2, 6		01, 02, 06				
		1	2, 6		11, 12, 14, 15, 16				
		1	2, 6		51, 52, 54, 55, 56				
		1	3, 7		12, 15, 16				

SPRINTER (VA)

SERIES	LINE	BODY	ENGINE	TRANSMISSION
L = LOWLINE	3 = HD DODGE 2WD 6 = Lt. Duty DODGE 4WD 2 = Med. Duty DODGE 2WD 7 = Med. Duty DODGE 4WD	55 = Wagon 140" 54 = Wagon 118" 52 = Wagon 140" 51 = Wagon 118" 12 = Van 140" 11 = Van 118" 06 = Front Section 158" 14 = Van 118" 15 = Van 140" 16 = Van 158" 56 = Wagon 158" 01 = Chassis Forward Control 118" 02 = Chassis Forward Control 140"	EX8 = Engine-2.7L I5 Mercedes Turbo Diesel	DGJ = Transmission-5-Spd. Automatic,W5A580

Front Floor Pan
Figure SVA-210

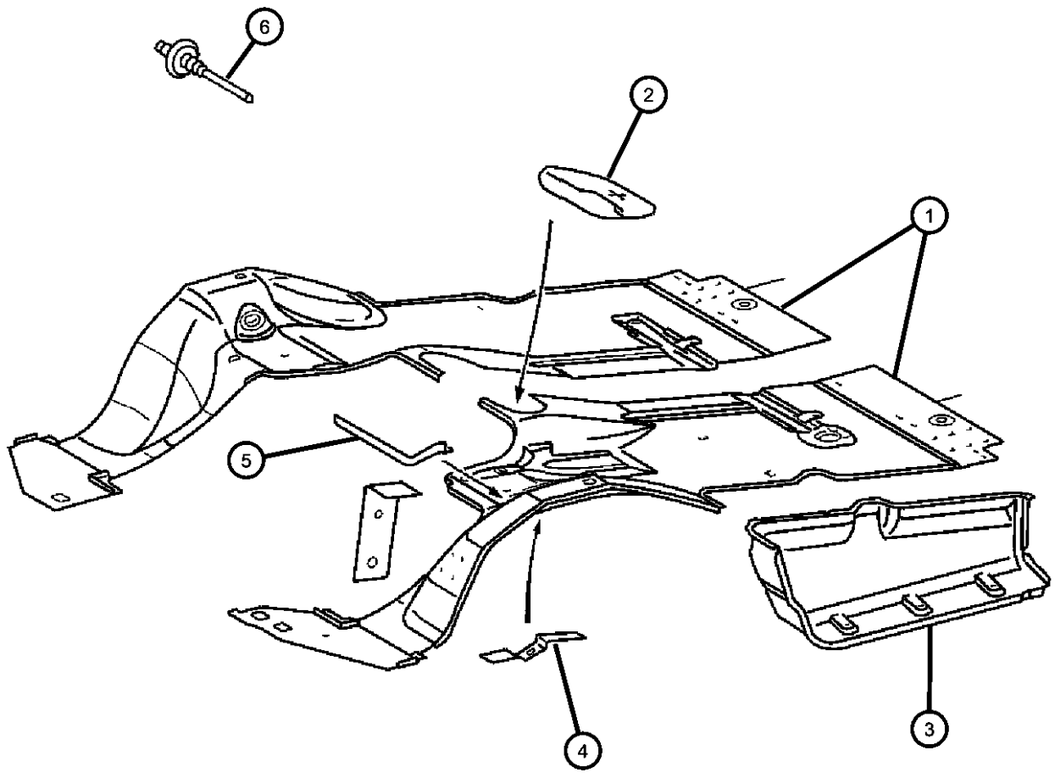

ITEM	PART NUMBER	QTY	LINE	SERIES	BODY	ENGINE	TRANS	TRIM	DESCRIPTION
5									PAD, Floor Pan
	05121494AA	1	2, 6		01, 02, 06				Left
		1	2, 6		11, 12, 14, 15, 16				Left
		1	2, 6		51, 52, 54, 55, 56				Left
		1	3, 7		12, 15, 16				Left
	05121495AA	1	2, 6		01, 02, 06				Right
		1	2, 6		11, 12, 14, 15, 16				Right
		1	2, 6		51, 52, 54, 55, 56				Right
		1	3, 7		12, 15, 16				Right
6									RIVET
	05133847AA	99	2, 6		01, 02, 06				
		99	2, 6		11, 12, 14, 15, 16				
		99	2, 6		51, 52, 54, 55, 56				
		99	3, 7		12, 15, 16				

SPRINTER (VA)

SERIES	LINE	BODY	ENGINE	TRANSMISSION
L = LOWLINE	3 = HD DODGE 2WD 6 = Lt. Duty DODGE 4WD 2 = Med. Duty DODGE 2WD 7 = Med. Duty DODGE 4WD	55 = Wagon 140" 54 = Wagon 118" 52 = Wagon 140" 51 = Wagon 118" 12 = Van 140" 11 = Van 118" 06 = Front Section 158" 14 = Van 118" 15 = Van 140" 16 = Van 158" 56 = Wagon 158" 01 = Chassis Forward Control 118" 02 = Chassis Forward Control 140"	EX8 = Engine-2.7L I5 Mercedes Turbo Diesel	DGJ = Transmission-5-Spd. Automatic,W5A580

AR = use ase required - = Non illustrrated part

Rear Floor Pan
Figure SVA-220

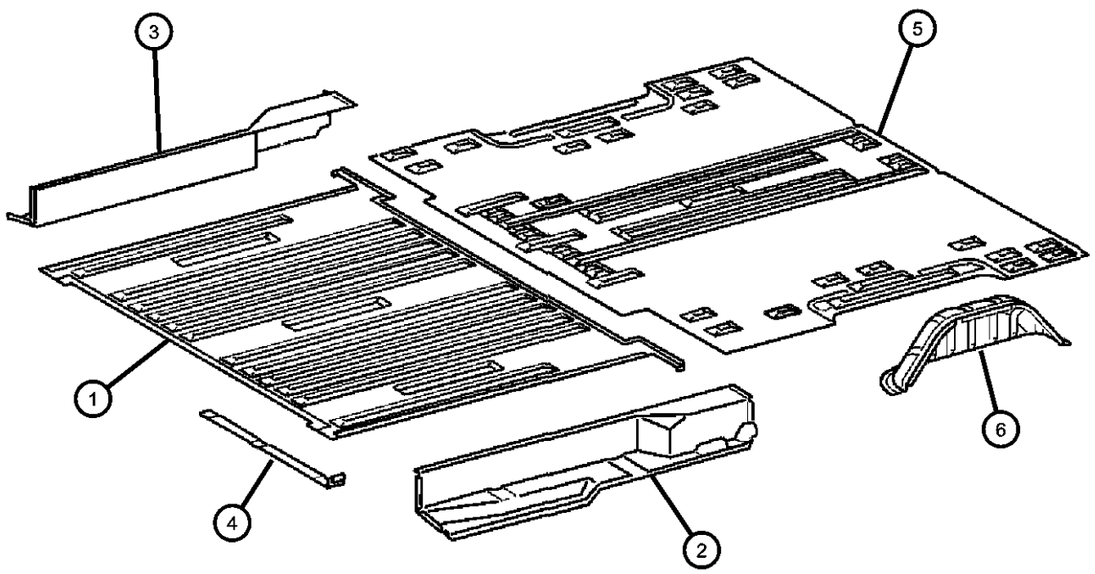

ITEM	PART NUMBER	QTY	LINE	SERIES	BODY	ENGINE	TRANS	TRIM	DESCRIPTION
Sales Codes: [CKZ] = Floor Covering, Rubber [CWC] = Cargo Partition [GKA] = Right Sliding Door [GKE] = Left Sliding Door									
1									PAN, Center Floor
	05121536AA	1	2, 6		11, 12, 14, 15, 16				[GKE], Left Door Sliding
		1	2, 6		51, 52, 54, 55, 56				[GKE], Left Door Sliding
		1	3, 7		12, 15, 16				[GKE], Left Door Sliding
	05121540AA	1	2, 6		11, 12, 14, 15, 16				[GKE], Left Door Sliding & [GKA], Right Door Sliding
		1	2, 6		51, 52, 54, 55, 56				[GKE], Left Door Sliding & [GKA], Right Door Sliding
		1	3, 7		12, 15, 16				[GKE], Left Door Sliding & [GKA], Right Door Sliding
	05121544AA	1	2, 6		11, 12, 14, 15, 16				[GKA], Right Door Sliding
		1	2, 6		51, 52, 54, 55, 56				[GKA], Right Door Sliding
		1	3, 7		12, 15, 16				[GKA], Right Door Sliding
	05121546AA	1	2, 6		11, 12, 14, 15, 16				[CWC], With Cargo Partition
		1	2, 6		51, 52, 54, 55, 56				[CWC], With Cargo Partition
		1	3, 7		12, 15, 16				[CWC], With Cargo Partition
2									PANEL, Side Step Well, Left
	05121457AA	1	2, 6		11, 12, 14, 15, 16				[GKE], Left Door Sliding
		1	2, 6		51, 52, 54, 55, 56				[GKE], Left Door Sliding
		1	3, 7		12, 15, 16				[GKE], Left Door Sliding
	05121461AA	1	2, 6		11, 12, 14, 15, 16				[GKE], Left Door Sliding & [CKZ], Floor Covering, Rubber
		1	3, 7		12, 15, 16				[GKE], Left Door Sliding & [CKZ], Floor Covering, Rubber

SPRINTER (VA)

SERIES	LINE	BODY	ENGINE	TRANSMISSION
L = LOWLINE	3 = HD DODGE 2WD 6 = Lt. Duty DODGE 4WD 2 = Med. Duty DODGE 2WD 7 = Med. Duty DODGE 4WD	55 = Wagon 140" 54 = Wagon 118" 52 = Wagon 140" 51 = Wagon 118" 12 = Van 140" 11 = Van 118" 06 = Front Section 158" 14 = Van 118" 15 = Van 140" 16 = Van 158" 56 = Wagon 158" 01 = Chassis Forward Control 118" 02 = Chassis Forward Control 140"	EX8 = Engine-2.7L I5 Mercedes Turbo Diesel	DGJ = Transmission-5-Spd. Automatic,W5A580

Rear Floor Pan
Figure SVA-220

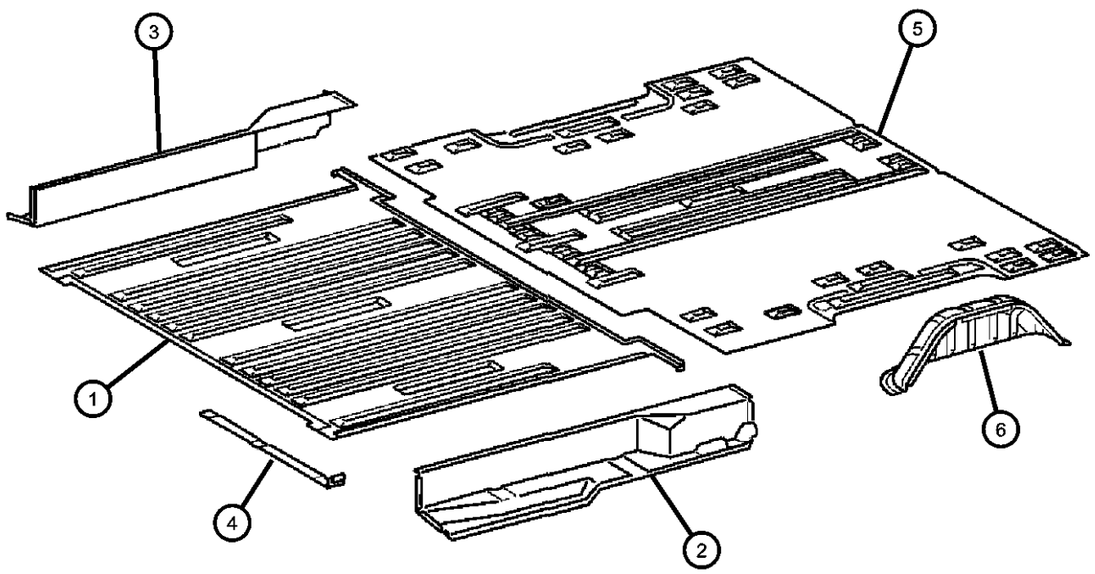

ITEM	PART NUMBER	QTY	LINE	SERIES	BODY	ENGINE	TRANS	TRIM	DESCRIPTION
		1	2, 6		51, 52, 54, 55, 56				[GKE], Left Door Sliding & [CKZ], Floor Covering, Rubber
3									PANEL, Side Step Well, Right
	05104158AA	1	2, 6		11, 12, 14, 15, 16				[GKA], Right Door Sliding
		1	2, 6		51, 52, 54, 55, 56				[GKA], Right Door Sliding
		1	3, 7		12, 15, 16				[GKA], Right Door Sliding
	05121464AA	1	2, 6		11, 12, 14, 15, 16				[GKA], Right Door Sliding & [CKZ], Floor Covering, Rubber
		1	2, 6		51, 52, 54, 55, 56				[GKA], Right Door Sliding & [CKZ], Floor Covering, Rubber
		1	3, 7		12, 15, 16				[GKA], Right Door Sliding & [CKZ], Floor Covering, Rubber
4									BRACKET, Floor Pan, In Front of Central Entrance
	05121501AA	2	2, 6		11, 12, 14, 15, 16				
		2	2, 6		51, 52, 54, 55, 56				
		2	3, 7		12, 15, 16				
5									PAN, Rear Floor
	05104565AA	1	2, 6		56				158 Inch Wheelbase
	05121561AA	1	2, 6		11, 12, 14, 15, 16				140 Inch Wheelbase
	05121474AA	1	3, 7		12, 15				140 Inch Wheelbase
	05121476AA	1	3, 7		16				158 Inch Wheelbase
		1	2, 6		12, 15				140 Inch Wheelbase
		1	2, 6		52, 55				140 Inch Wheelbase
	05121563AA	1	2, 6		51, 54				118 Inch Wheelbase
6									PANEL, Wheelhouse
	05104162AA	2	2, 6		11, 12, 14, 15, 16				

SPRINTER (VA)

SERIES	LINE	BODY	ENGINE	TRANSMISSION
L = LOWLINE	3 = HD DODGE 2WD 6 = Lt. Duty DODGE 4WD 2 = Med. Duty DODGE 2WD 7 = Med. Duty DODGE 4WD	55 = Wagon 140" 54 = Wagon 118" 52 = Wagon 140" 51 = Wagon 118" 12 = Van 140" 11 = Van 118" 06 = Front Section 158" 14 = Van 118" 15 = Van 140" 16 = Van 158" 56 = Wagon 158" 01 = Chassis Forward Control 118" 02 = Chassis Forward Control 140"	EX8 = Engine-2.7L I5 Mercedes Turbo Diesel	DGJ = Transmission-5-Spd. Automatic,W5A580

Rear Floor Pan
Figure SVA-220

ITEM	PART NUMBER	QTY	LINE	SERIES	BODY	ENGINE	TRANS	TRIM	DESCRIPTION
		2	2, 6		51, 52, 54, 55, 56				
		2	3, 7		12, 15, 16				

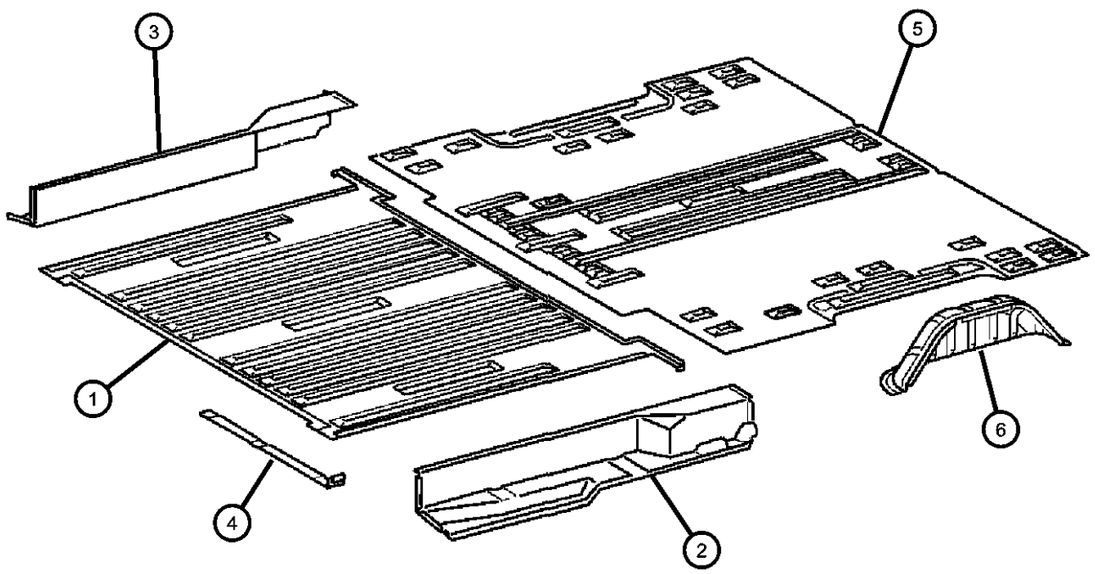

SPRINTER (VA)

SERIES	LINE	BODY	ENGINE	TRANSMISSION
L = LOWLINE	3 = HD DODGE 2WD 6 = Lt. Duty DODGE 4WD 2 = Med. Duty DODGE 2WD 7 = Med. Duty DODGE 4WD	55 = Wagon 140" 54 = Wagon 118" 52 = Wagon 140" 51 = Wagon 118" 12 = Van 140" 11 = Van 118" 06 = Front Section 158" 14 = Van 118" 15 = Van 140" 16 = Van 158" 56 = Wagon 158" 01 = Chassis Forward Control 118" 02 = Chassis Forward Control 140"	EX8 = Engine-2.7L I5 Mercedes Turbo Diesel	DGJ = Transmission-5-Spd. Automatic,W5A580

AR = use ase required - = Non illustrrated part

Plugs
Figure SVA-310

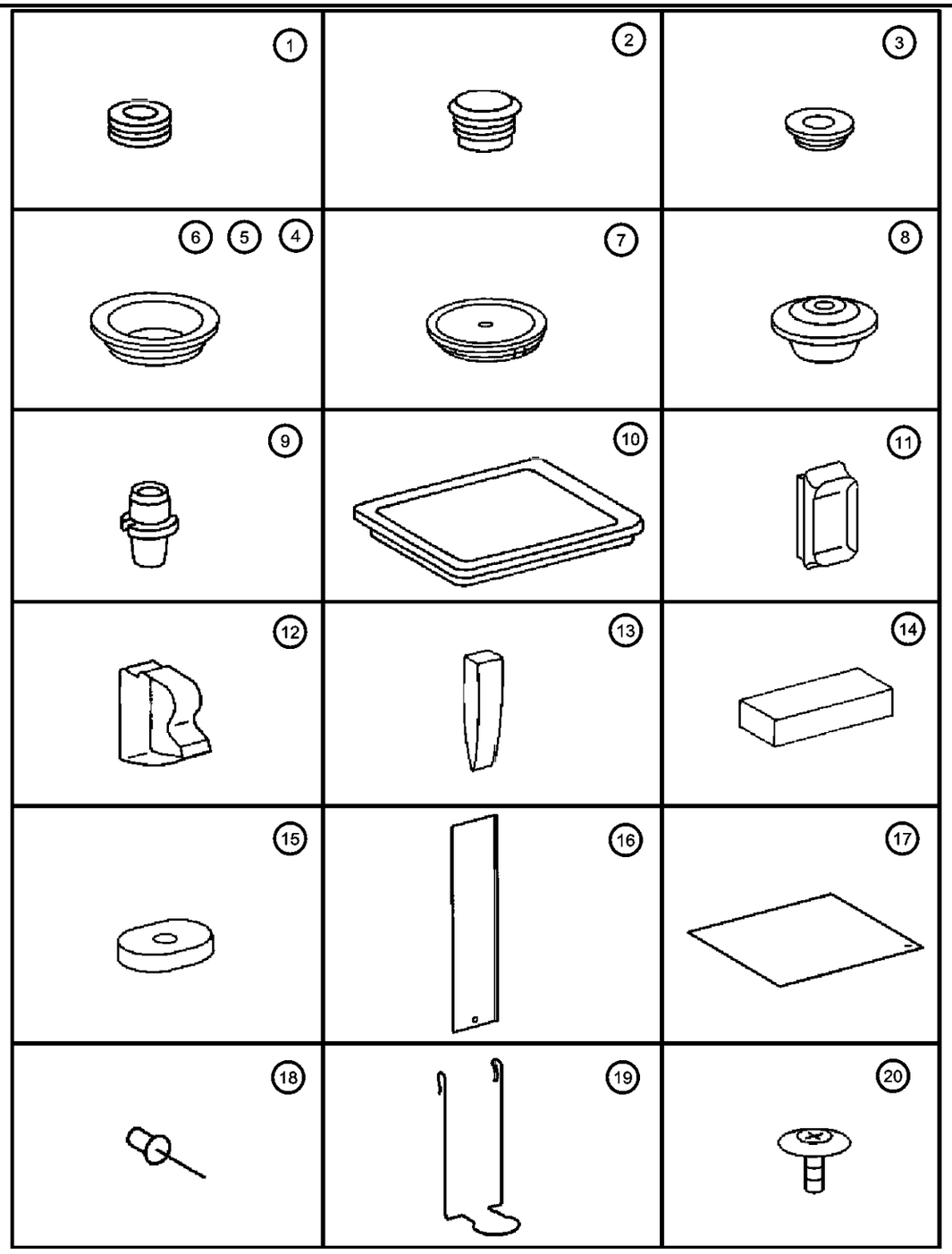

ITEM	PART NUMBER	QTY	LINE	SERIES	BODY	ENGINE	TRANS	TRIM	DESCRIPTION
1									PLUG, Expansion, Dash Panel, Engine Compartment
	05133557AA	1	2, 6		51, 52, 54, 55, 56				
		1	2, 6		01, 02, 06				
		1	2, 6		11, 12, 14, 15, 16				
	05133657AA	1	3, 7		12, 15, 16				
2									PLUG, Body, Water Drain, 22mm
	05125994AA	2	2, 6		01, 02, 06				
		2	2, 6		11, 12, 14, 15, 16				
		2	2, 6		51, 52, 54, 55, 56				
		2	3, 7		12, 15, 16				
3									PLUG, Door Contact Switch
	05098417AA	1	2, 6		11, 12, 14, 15, 16				
		1	2, 6		51, 52, 54, 55, 56				
		1	3, 7		12, 15, 16				
4									PLUG, W/S Washer Reservoir Hole
	05098441AA	2	2, 6		11, 12, 14, 15, 16				
		2	3, 7		12, 15, 16				
5									GROMMET, Body
	05125511AA	2	2, 6		11, 12, 14, 15, 16				
		2	3, 7		12, 15, 16				
6									PLUG, Body
	05098415AA	4	2, 6		01, 02, 06				
		6	2, 6		11, 12, 14, 15, 16				
		6	2, 6		51, 52, 54, 55, 56				

SPRINTER (VA)

SERIES	LINE	BODY	ENGINE	TRANSMISSION
L = LOWLINE	3 = HD DODGE 2WD 6 = Lt. Duty DODGE 4WD 2 = Med. Duty DODGE 2WD 7 = Med. Duty DODGE 4WD	55 = Wagon 140" 54 = Wagon 118" 52 = Wagon 140" 51 = Wagon 118" 12 = Van 140" 11 = Van 118" 06 = Front Section 158" 14 = Van 118" 15 = Van 140" 16 = Van 158" 56 = Wagon 158" 01 = Chassis Forward Control 118" 02 = Chassis Forward Control 140"	EX8 = Engine-2.7L I5 Mercedes Turbo Diesel	DGJ = Transmission-5-Spd. Automatic,W5A580

Plugs
Figure SVA-310

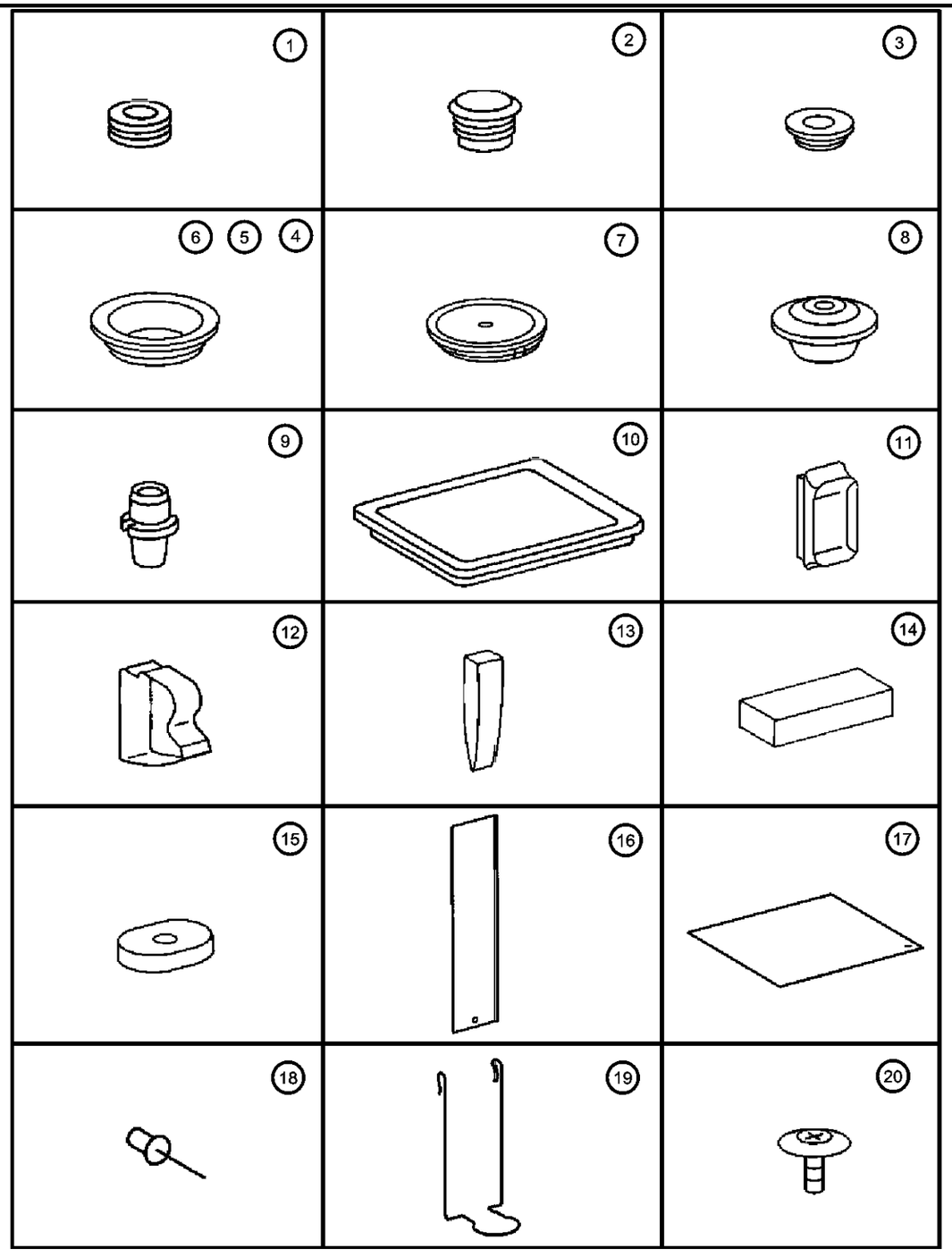

ITEM	PART NUMBER	QTY	LINE	SERIES	BODY	ENGINE	TRANS	TRIM	DESCRIPTION
		8	3, 7		12, 15, 16				
7									PLUG, Body, [89mm]
	05125518AA	6	2, 6		11, 14				
		14	2, 6		16				
		8	2, 6		12, 15				
		6	2, 6		51, 54				
		4	2, 6		52, 55				
		14	2, 6		56				
8									PLUG
	05103947AA	2	2, 6		11, 12, 14, 15, 16				
		2	2, 6		51, 52, 54, 55, 56				
		2	3, 7		12, 15, 16				
9									DRAIN SPOUT, Drain Tube, [13mm]
	05133556AA	2	2, 6		01, 02, 06				
		2	2, 6		11, 12, 14, 15, 16				
		2	2, 6		52, 54, 55, 56, 51				
		2	3, 7		12, 15, 16				
10									PLUG, Body, Water Drain
	05126003AA	2	2, 6		11, 12, 14, 15, 16				
		2	2, 6		51, 52, 54, 55, 56				
		2	3, 7		12, 15, 16				
11									PLUG, Expansion
	05125514AA	4	2, 6		11, 12, 14, 15, 16				
		4	2, 6		51, 52, 54, 55, 56				

SPRINTER (VA)

SERIES	LINE	BODY	ENGINE	TRANSMISSION
L = LOWLINE	3 = HD DODGE 2WD 6 = Lt. Duty DODGE 4WD 2 = Med. Duty DODGE 2WD 7 = Med. Duty DODGE 4WD	55 = Wagon 140" 54 = Wagon 118" 52 = Wagon 140" 51 = Wagon 118" 12 = Van 140" 11 = Van 118" 06 = Front Section 158" 14 = Van 118" 15 = Van 140" 16 = Van 158" 56 = Wagon 158" 01 = Chassis Forward Control 118" 02 = Chassis Forward Control 140"	EX8 = Engine-2.7L I5 Mercedes Turbo Diesel	DGJ = Transmission-5-Spd. Automatic,W5A580

Plugs
Figure SVA-310

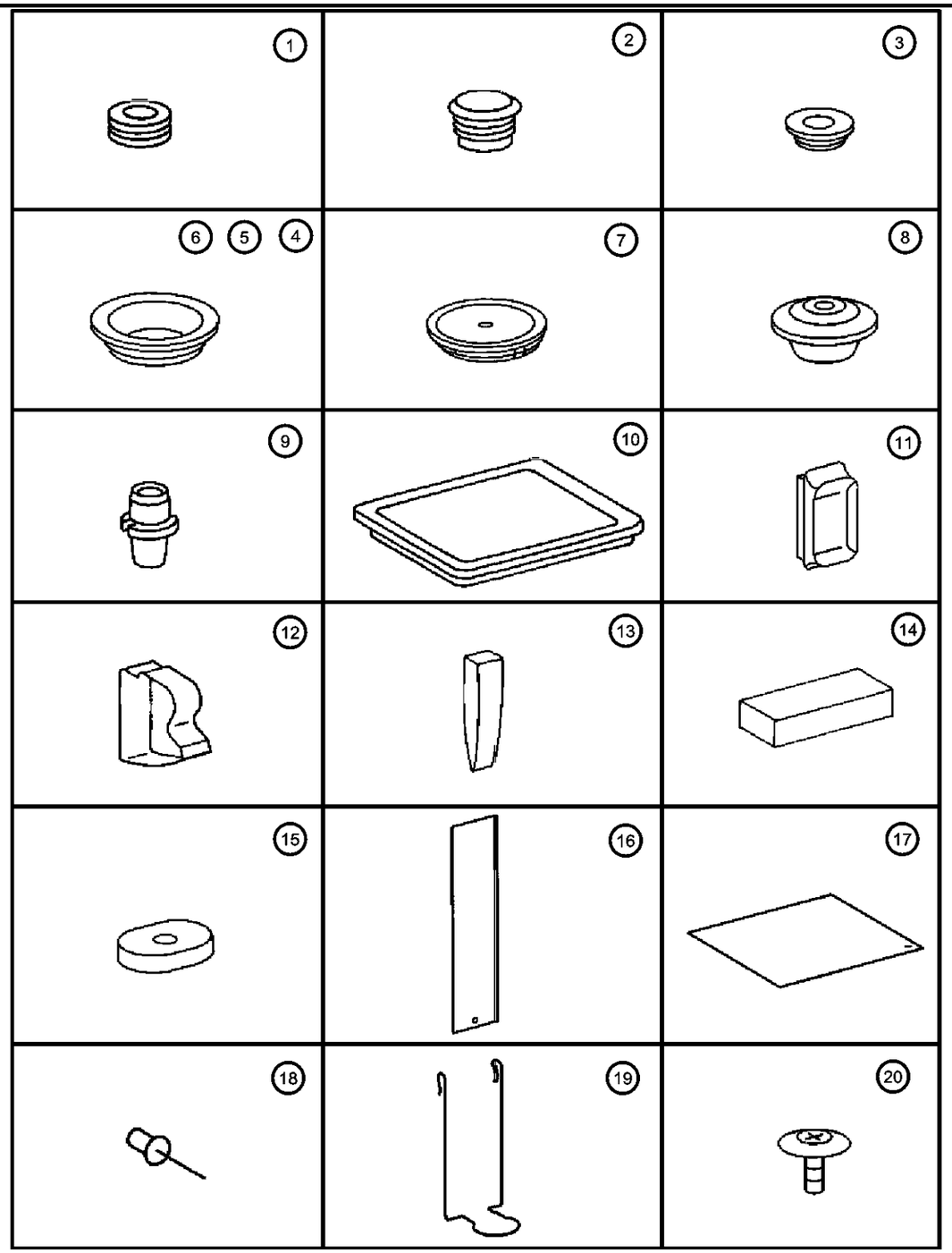

ITEM	PART NUMBER	QTY	LINE	SERIES	BODY	ENGINE	TRANS	TRIM	DESCRIPTION
		4	3, 7		12, 15, 16				
12									SEAL
	05124765AA	2	2, 6		01, 02, 06				
		4	2, 6		51, 52, 54, 55, 56				
		4	2, 6		11, 12, 14, 15, 16				
		4	3, 7		12, 15, 16				
13									SEAL
	05124768AA	2	2, 6		11, 12, 14, 15, 16				
		2	2, 6		54, 55, 56, 51, 52				
		2	3, 7		12, 15, 16				
14									SEAL, B-Pillar, Right
	05124771AA	1	2, 6		01, 02, 06				
		1	2, 6		11, 12, 14, 15, 16				
		1	2, 6		51, 52, 54, 55, 56				
		1	3, 7		12, 15, 16				
15									GROMMET
	05124774AA	1	2, 6		01, 02, 06				Oval Shape
		1	2, 6		11, 12, 14, 15, 16				Oval Shape
		1	2, 6		51, 52, 54, 55, 56				Oval Shape
		1	3, 7		12, 15, 16				Oval Shape
	05124775AA	1	2, 6		01, 02, 06				Circular Solid
		1	2, 6		11, 12, 14, 15, 16				Circular Solid
		1	2, 6		51, 52, 54, 55, 56				Circular Solid

SPRINTER (VA)

SERIES	LINE	BODY	ENGINE	TRANSMISSION
L = LOWLINE	3 = HD DODGE 2WD 6 = Lt. Duty DODGE 4WD 2 = Med. Duty DODGE 2WD 7 = Med. Duty DODGE 4WD	55 = Wagon 140" 54 = Wagon 118" 52 = Wagon 140" 51 = Wagon 118" 12 = Van 140" 11 = Van 118" 06 = Front Section 158" 14 = Van 118" 15 = Van 140" 16 = Van 158" 56 = Wagon 158" 01 = Chassis Forward Control 118" 02 = Chassis Forward Control 140"	EX8 = Engine-2.7L I5 Mercedes Turbo Diesel	DGJ = Transmission-5-Spd. Automatic,W5A580

Plugs
Figure SVA-310

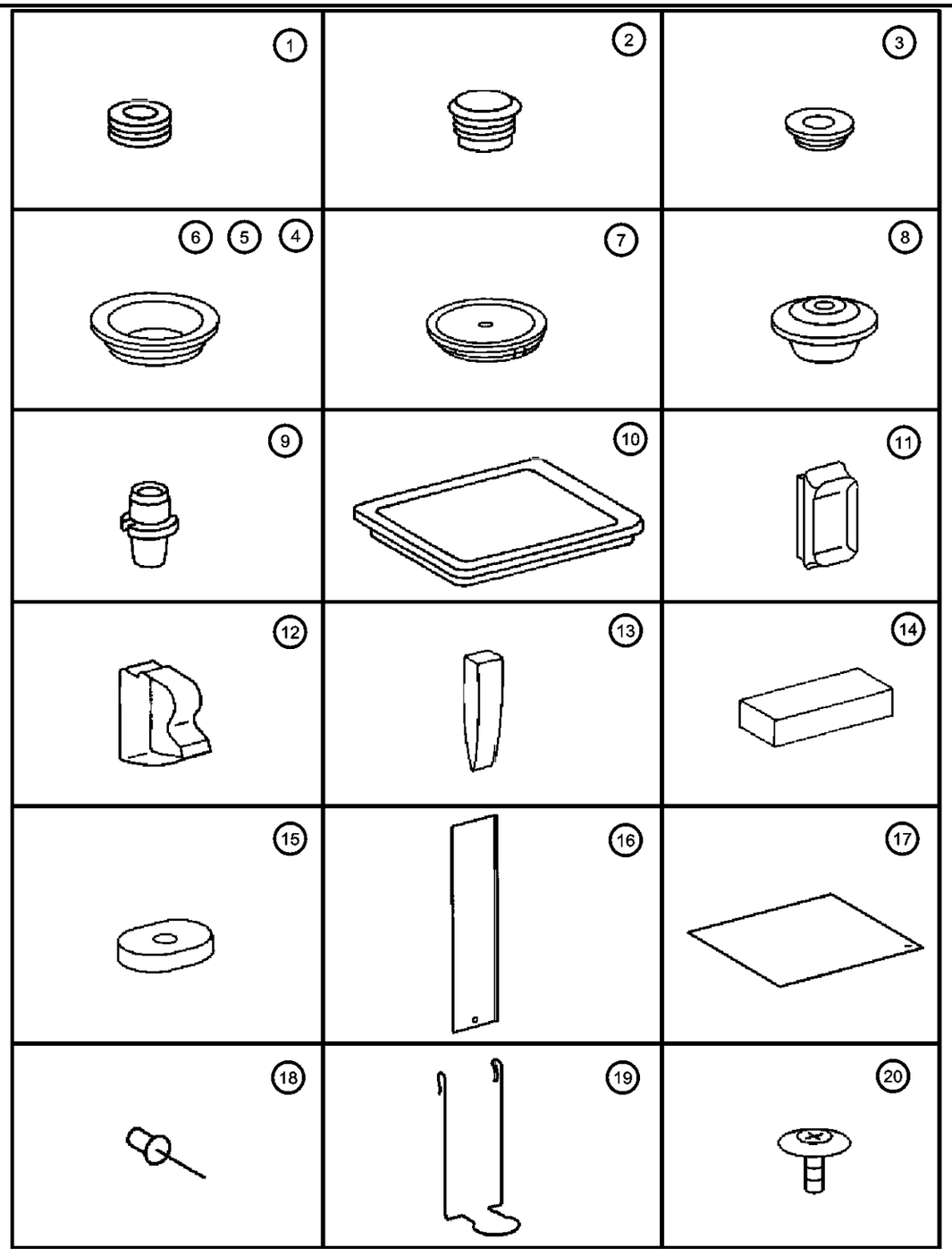

ITEM	PART NUMBER	QTY	LINE	SERIES	BODY	ENGINE	TRANS	TRIM	DESCRIPTION
		1	3, 7		12, 15, 16				Circular Solid
	05124777AA	1	3, 7		12, 15, 16				Circular With Hole
		1	2, 6		06, 01, 02				Circular With Hole
		1	2, 6		11, 12, 14, 15, 16				Circular With Hole
		1	2, 6		51, 52, 54, 55, 56				Circular With Hole
16									COVER, Cable Guide Duct
	05122651AA	1	2, 6		01, 02, 06				
		1	2, 6		51, 52, 54, 55, 56				
		1	2, 6		11, 12, 14, 15, 16				
		1	3, 7		12, 15, 16				
17									COVER, Cable Guide Duct
	05122648AA	1	2, 6		01, 02, 06				
		1	2, 6		11, 12, 14, 15, 16				
		1	2, 6		51, 52, 54, 55, 56				
		1	3, 7		12, 15, 16				
18									RIVET, Blind Bulb, Cable Guide Duct [4.0x8]
	05133417AA	3	2, 6		01, 02, 06				
		3	2, 6		11, 12, 14, 15, 16				
		3	2, 6		54, 55, 56, 51, 52				
		3	3, 7		12, 15, 16				
19									CLIP, Instrument Panel
	05133558AA	2	2, 6		11, 12, 14, 15, 16				
		2	2, 6		51, 52, 54, 55, 56				

SPRINTER (VA)

SERIES	LINE	BODY	ENGINE	TRANSMISSION
L = LOWLINE	3 = HD DODGE 2WD 6 = Lt. Duty DODGE 4WD 2 = Med. Duty DODGE 2WD 7 = Med. Duty DODGE 4WD	55 = Wagon 140" 54 = Wagon 118" 52 = Wagon 140" 51 = Wagon 118" 12 = Van 140" 11 = Van 118" 06 = Front Section 158" 14 = Van 118" 15 = Van 140" 16 = Van 158" 56 = Wagon 158" 01 = Chassis Forward Control 118" 02 = Chassis Forward Control 140"	EX8 = Engine-2.7L I5 Mercedes Turbo Diesel	DGJ = Transmission-5-Spd. Automatic,W5A580

Plugs
Figure SVA-310

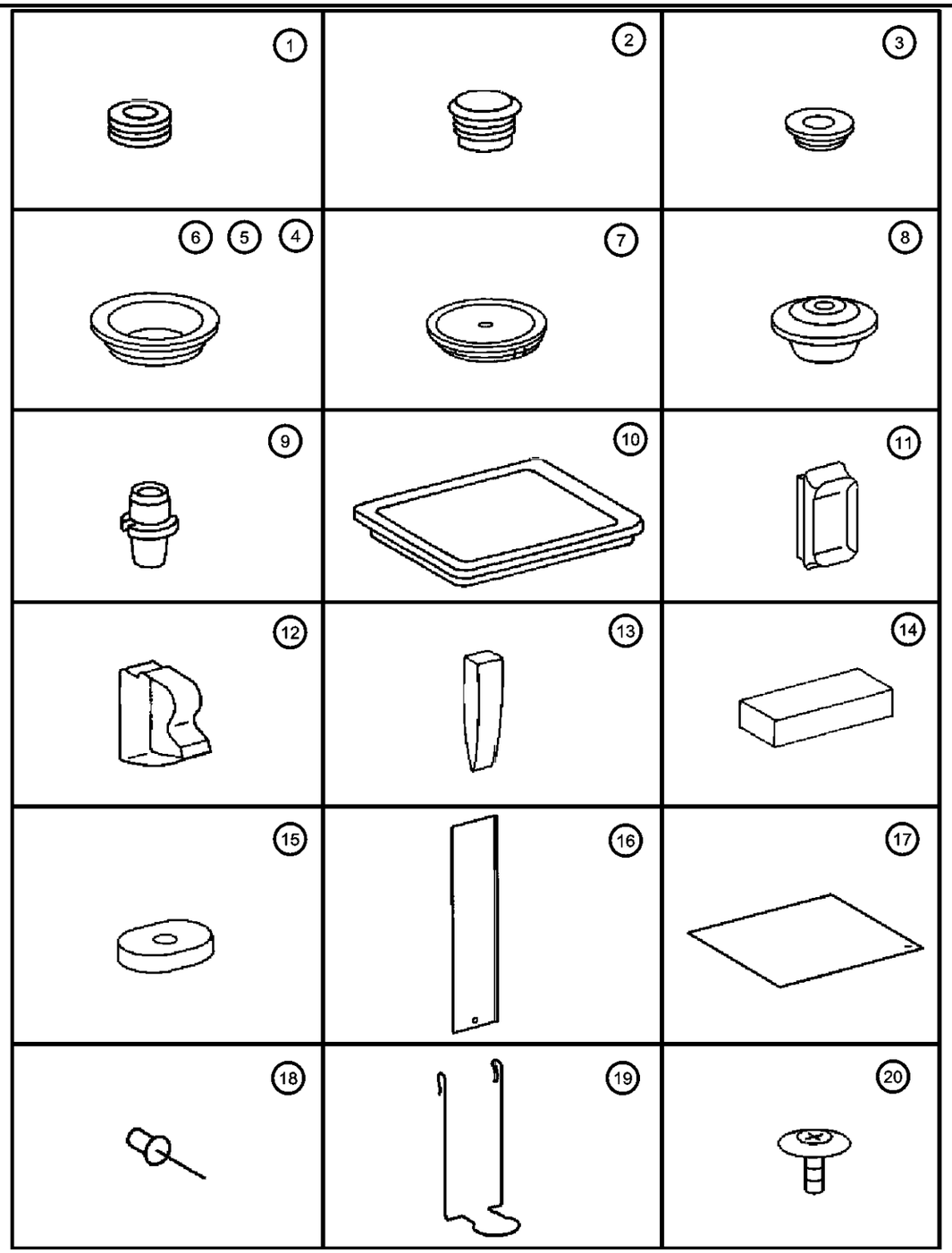

ITEM	PART NUMBER	QTY	LINE	SERIES	BODY	ENGINE	TRANS	TRIM	DESCRIPTION
		1	3, 7		12, 15, 16				
20									PLUG, Body
	05125982AA	1	2, 6		11, 12, 14, 15, 16				
		1	2, 6		51, 52, 54, 55, 56				
		1	3, 7		12, 15, 16				

SPRINTER (VA)

SERIES	LINE	BODY	ENGINE	TRANSMISSION
L = LOWLINE	3 = HD DODGE 2WD 6 = Lt. Duty DODGE 4WD 2 = Med. Duty DODGE 2WD 7 = Med. Duty DODGE 4WD	55 = Wagon 140" 54 = Wagon 118" 52 = Wagon 140" 51 = Wagon 118" 12 = Van 140" 11 = Van 118" 06 = Front Section 158" 14 = Van 118" 15 = Van 140" 16 = Van 158" 56 = Wagon 158" 01 = Chassis Forward Control 118" 02 = Chassis Forward Control 140"	EX8 = Engine-2.7L I5 Mercedes Turbo Diesel	DGJ = Transmission-5-Spd. Automatic,W5A580

AR = use ase required - = Non illustrrated part

Front Fender
Figure SVA-410

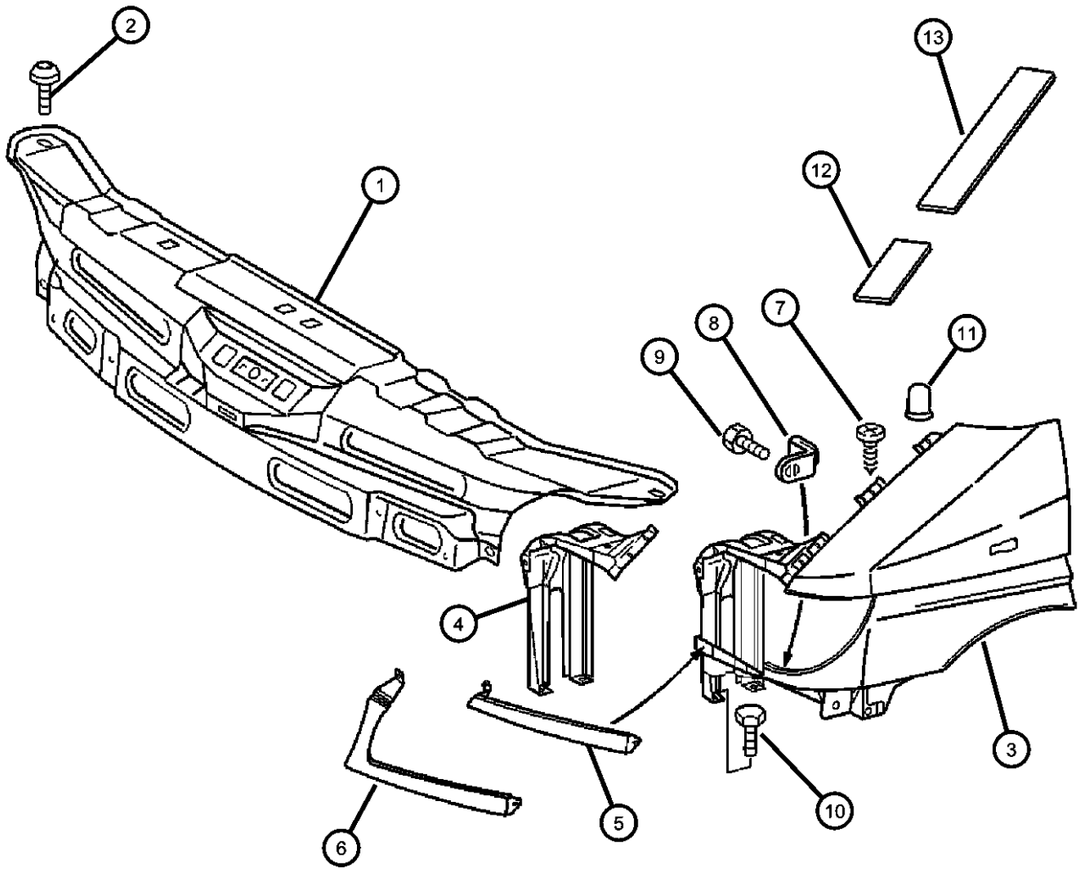

ITEM	PART NUMBER	QTY	LINE	SERIES	BODY	ENGINE	TRANS	TRIM	DESCRIPTION
1									CROSSMEMBER, Radiator
	05104504AA	1	2, 6		01, 02, 06				
		1	2, 6		11, 12, 14, 15, 16				
		1	2, 6		51, 52, 54, 55, 56				
		1	3, 7		12, 15, 16				
2									SCREW
	05103713AA	4	2, 6		01, 02, 06				
		4	2, 6		11, 12, 14, 15, 16				
		4	2, 6		51, 52, 54, 55, 56				
		4	3, 7		12, 15, 16				
3									FENDER, Front
	05104180AA	1	2, 6		11, 12, 14, 15, 16				Left
		1	2, 6		51, 52, 54, 55, 56				Left
		1	2, 6		01, 02, 06				Left
	05104181AA	1	2, 6		12, 14, 15, 16, 11				Right
		1	2, 6		51, 52, 54, 55, 56				Right
		1	3, 7		12, 15, 16				Right
		1	3, 7		12, 15, 16				Left
		1	2, 6		01, 02, 06				Right
4									SUPPORT, Radiator Closure Panel
	05104165AA	1	2, 6		01, 02, 06				Left
		1	2, 6		11, 12, 14, 15, 16				Left
		1	2, 6		51, 52, 54, 55, 56				Left
		1	3, 7		12, 15, 16				Left

SPRINTER (VA)

SERIES	LINE	BODY	ENGINE	TRANSMISSION
L = LOWLINE	3 = HD DODGE 2WD 6 = Lt. Duty DODGE 4WD 2 = Med. Duty DODGE 2WD 7 = Med. Duty DODGE 4WD	55 = Wagon 140" 54 = Wagon 118" 52 = Wagon 140" 51 = Wagon 118" 12 = Van 140" 11 = Van 118" 06 = Front Section 158" 14 = Van 118" 15 = Van 140" 16 = Van 158" 56 = Wagon 158" 01 = Chassis Forward Control 118" 02 = Chassis Forward Control 140"	EX8 = Engine-2.7L I5 Mercedes Turbo Diesel	DGJ = Transmission-5-Spd. Automatic,W5A580

Front Fender
Figure SVA-410

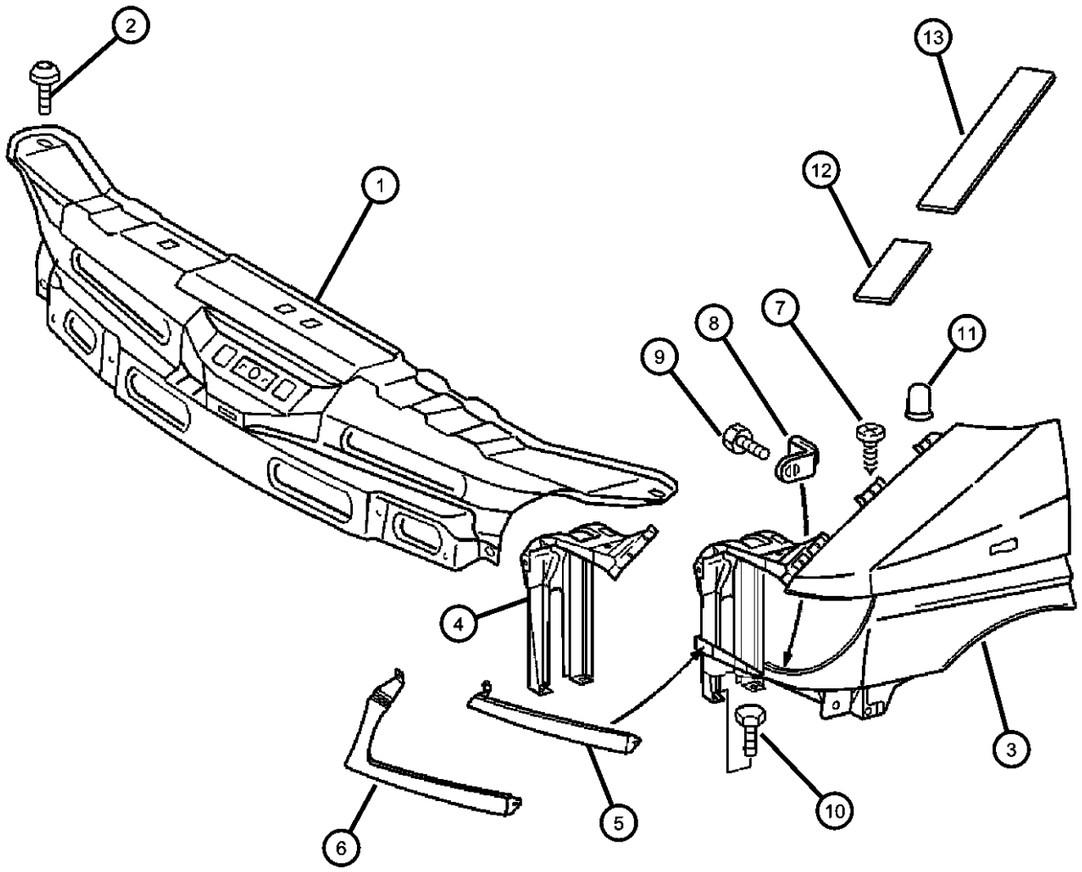

ITEM	PART NUMBER	QTY	LINE	SERIES	BODY	ENGINE	TRANS	TRIM	DESCRIPTION
	05104169AA	1	2, 6		01, 02, 06				Right
		1	2, 6		11, 12, 14, 15, 16				Right
		1	2, 6		51, 52, 54, 55, 56				Right
		1	3, 7		12, 15, 16				Right
5									BEZEL, Headlamp, Dodge
	05104210AA	1	2, 3						Left
	05104213AA	1	2, 3						Right
6									BEZEL, Headlamp, Freightliner
	05104216AA	1	6		01, 02, 06				Left
		1	6		11, 12, 14, 15, 16				Left
		1	6		56, 51, 52, 54, 55				Left
		1	7		02, 06				Left
		1	7		12, 15, 16				Left
	05104217AA	1	6		01, 02, 06				Right
		1	6		11, 12, 14, 15, 16				Right
		1	6		51, 52, 54, 55, 56				Right
		1	7		02, 06				Right
		1	7		12, 15, 16				Right
7									SCREW
	06104581AA	7	2, 6		01, 02, 06				
		7	2, 6		11, 12, 14, 15, 16				
		7	2, 6		51, 52, 54, 55, 56				
		7	3, 7		12, 15, 16				
8									RETAINER

SPRINTER (VA)

SERIES	LINE	BODY	ENGINE	TRANSMISSION
L = LOWLINE	3 = HD DODGE 2WD 6 = Lt. Duty DODGE 4WD 2 = Med. Duty DODGE 2WD 7 = Med. Duty DODGE 4WD	55 = Wagon 140" 54 = Wagon 118" 52 = Wagon 140" 51 = Wagon 118" 12 = Van 140" 11 = Van 118" 06 = Front Section 158" 14 = Van 118" 15 = Van 140" 16 = Van 158" 56 = Wagon 158" 01 = Chassis Forward Control 118" 02 = Chassis Forward Control 140"	EX8 = Engine-2.7L I5 Mercedes Turbo Diesel	DGJ = Transmission-5-Spd. Automatic,W5A580

AR = use ase required - = Non illustrrated part

Front Fender
Figure SVA-410

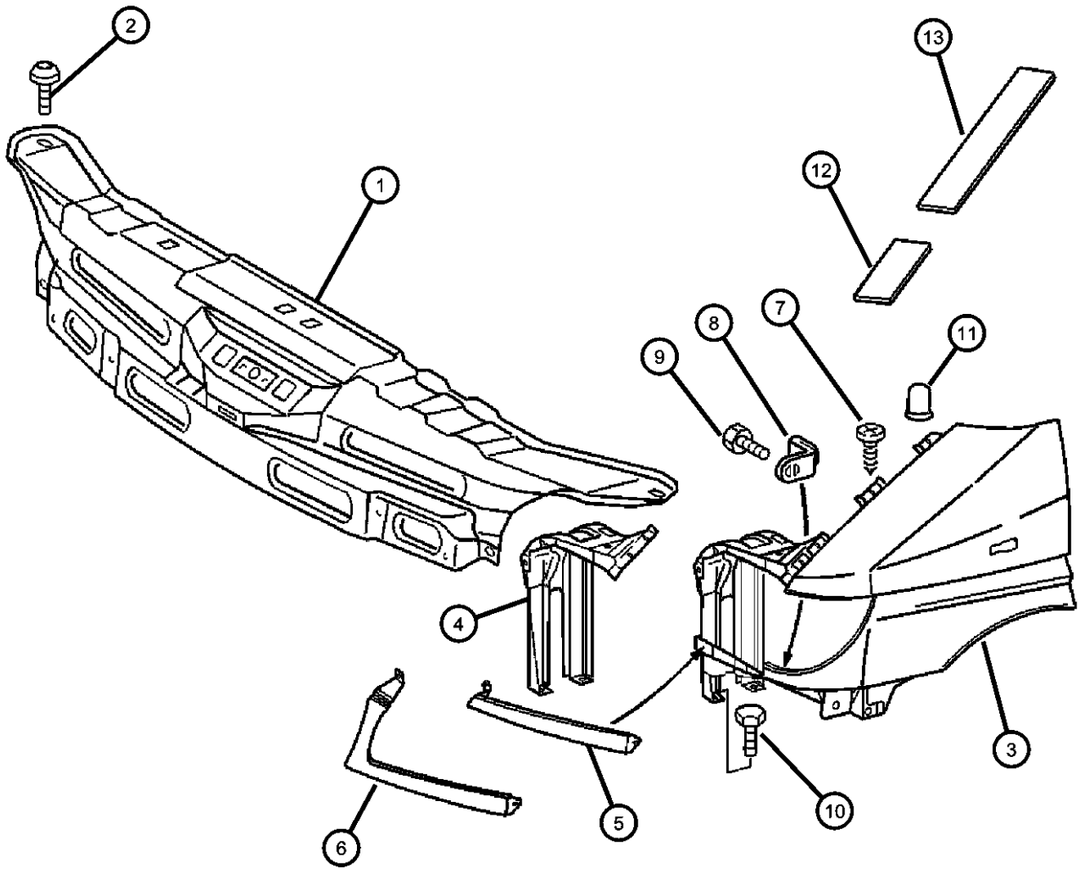

ITEM	PART NUMBER	QTY	LINE	SERIES	BODY	ENGINE	TRANS	TRIM	DESCRIPTION
	05104527AA	1	2, 6		01, 02, 06				
		1	2, 6		11, 12, 14, 15, 16				
		1	2, 6		51, 52, 54, 55, 56				
		1	3, 7		12, 15, 16				
9									SCREW, Tapping
	06104574AA	2	2, 6		11, 12, 14, 15, 16				
		2	2, 6		51, 52, 54, 55, 56				
		2	3, 7		12, 15, 16				
10	06104022AA	3							SCREW
11									CAP, Protective
	05104537AA	1	2, 6		01, 02, 06				
		1	2, 6		51, 52, 54, 55, 56				
		1	2, 6		11, 12, 14, 15, 16				
		1	3, 7		12, 15, 16				
12									SEAL, Fender To Cowl
	05121445AA	2	2, 6		51, 52, 54, 55, 56				
		2	2, 6		01, 02, 06				
		2	2, 6		11, 12, 14, 15, 16				
		2	3, 7		12, 15, 16				
13									SEAL, Fender To Cowl
	05121446AA	1	2, 6		11, 12, 14, 15, 16				
		1	2, 6		01, 02, 06				
		1	2, 6		55, 56, 51, 52, 54				
		1	3, 7		12, 15, 16				

SPRINTER (VA)

SERIES	LINE	BODY	ENGINE	TRANSMISSION
L = LOWLINE	3 = HD DODGE 2WD 6 = Lt. Duty DODGE 4WD 2 = Med. Duty DODGE 2WD 7 = Med. Duty DODGE 4WD	55 = Wagon 140" 54 = Wagon 118" 52 = Wagon 140" 51 = Wagon 118" 12 = Van 140" 11 = Van 118" 06 = Front Section 158" 14 = Van 118" 15 = Van 140" 16 = Van 158" 56 = Wagon 158" 01 = Chassis Forward Control 118" 02 = Chassis Forward Control 140"	EX8 = Engine-2.7L I5 Mercedes Turbo Diesel	DGJ = Transmission-5-Spd. Automatic,W5A580

Fender Splash Guards
Figure SVA-420

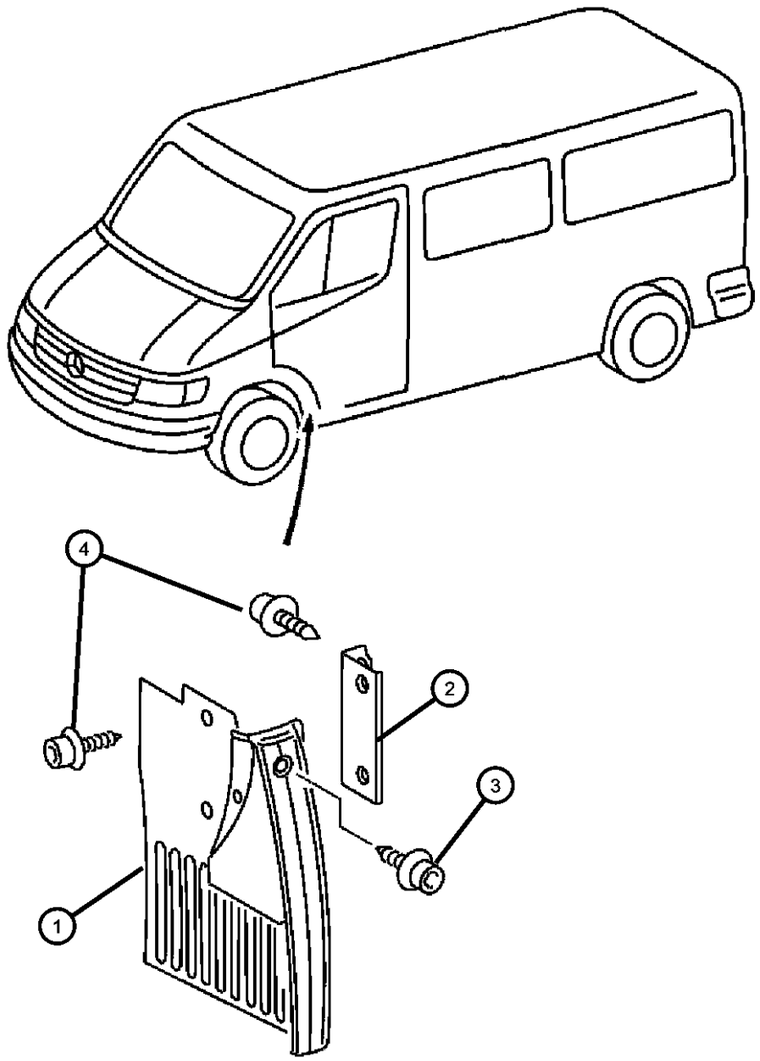

ITEM	PART NUMBER	QTY	LINE	SERIES	BODY	ENGINE	TRANS	TRIM	DESCRIPTION
1									GUARD, Splash
	05104518AA	1	2, 6		01, 02, 06				Left
		1	2, 6		11, 12, 14, 15, 16				Left
		1	2, 6		51, 52, 54, 55, 56				Left
		1	3, 7		12, 15, 16				Left
	05104521AA	1	2, 6		01, 02, 06				Right
		1	2, 6		11, 12, 14, 15, 16				Right
		1	2, 6		51, 52, 54, 55, 56				Right
		1	3, 7		12, 15, 16				Right
	05132502AA	1	2, 6		01, 02, 06				With 16 Inch Wheels, Left
		1	2, 6		11, 12, 14, 15, 16				With 16 Inch Wheels, Left
		1	2, 6		51, 52, 54, 55, 56				With 16 Inch Wheels, Left
	05132504AA	1	2, 6		01, 02, 06				With 16 Inch Wheels, Right
		1	2, 6		11, 12, 14, 15, 16				With 16 Inch Wheels, Right
		1	2, 6		51, 52, 54, 55, 56				With 16 Inch Wheels, Right
2									BRACKET
	05104519AA	2	2, 6		01, 02, 06				
		2	2, 6		11, 12, 14, 15, 16				
		2	2, 6		51, 52, 54, 55, 56				
		2	3, 7		12, 15, 16				
3									SCREW
	06104582AA	4	2, 6		01, 02, 06				
		4	2, 6		11, 12, 14, 15, 16				

SPRINTER (VA)

SERIES	LINE	BODY	ENGINE	TRANSMISSION
L = LOWLINE	3 = HD DODGE 2WD 6 = Lt. Duty DODGE 4WD 2 = Med. Duty DODGE 2WD 7 = Med. Duty DODGE 4WD	55 = Wagon 140" 54 = Wagon 118" 52 = Wagon 140" 51 = Wagon 118" 12 = Van 140" 11 = Van 118" 06 = Front Section 158" 14 = Van 118" 15 = Van 140" 16 = Van 158" 56 = Wagon 158" 01 = Chassis Forward Control 118" 02 = Chassis Forward Control 140"	EX8 = Engine-2.7L I5 Mercedes Turbo Diesel	DGJ = Transmission-5-Spd. Automatic,W5A580

Fender Splash Guards
Figure SVA-420

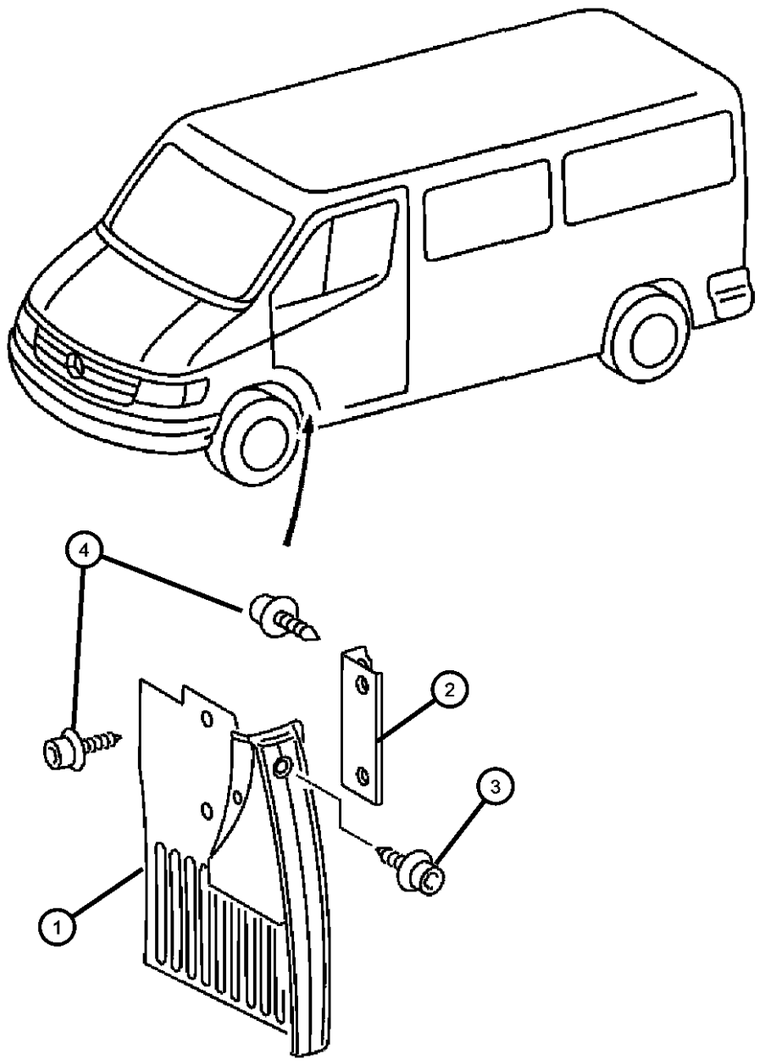

ITEM	PART NUMBER	QTY	LINE	SERIES	BODY	ENGINE	TRANS	TRIM	DESCRIPTION
		4	2, 6		51, 52, 54, 55, 56				
		4	3, 7		12, 15, 16				
4									SCREW
	06104581AA	6	2, 6		11, 12, 14, 15, 16				
		6	2, 6		51, 52, 54, 55, 56				
		6	3, 7		12, 15, 16				

SPRINTER (VA)

SERIES	LINE	BODY	ENGINE	TRANSMISSION
L = LOWLINE	3 = HD DODGE 2WD 6 = Lt. Duty DODGE 4WD 2 = Med. Duty DODGE 2WD 7 = Med. Duty DODGE 4WD	55 = Wagon 140" 54 = Wagon 118" 52 = Wagon 140" 51 = Wagon 118" 12 = Van 140" 11 = Van 118" 06 = Front Section 158" 14 = Van 118" 15 = Van 140" 16 = Van 158" 56 = Wagon 158" 01 = Chassis Forward Control 118" 02 = Chassis Forward Control 140"	EX8 = Engine-2.7L I5 Mercedes Turbo Diesel	DGJ = Transmission-5-Spd. Automatic,W5A580

Hood and Hood Release
Figure SVA-510

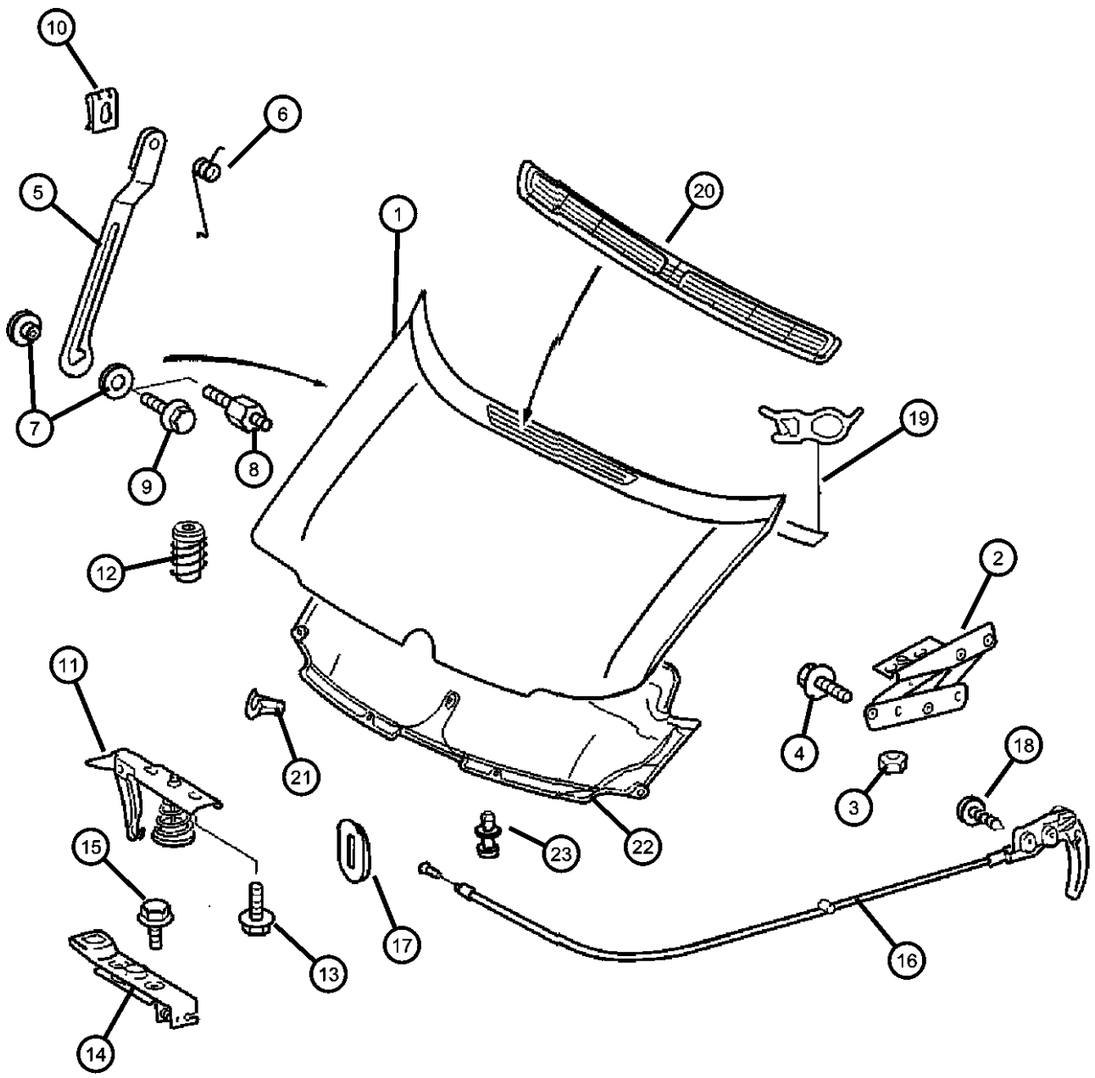

ITEM	PART NUMBER	QTY	LINE	SERIES	BODY	ENGINE	TRANS	TRIM	DESCRIPTION
1									HOOD
	05104402AB	1	2, 6		01, 02, 06				
		1	2, 6		11, 12, 14, 15, 16				
		1	2, 6		51, 52, 54, 55, 56				
		1	3, 7		12, 15, 16				
2									HINGE, Hood
	05104404AA	1	2, 6		01, 02, 06				Left
		1	2, 6		11, 12, 14, 15, 16				Left
		1	2, 6		51, 52, 54, 55, 56				Left
		1	3, 7		12, 15, 16				Left
	05104406AA	1	2, 6		01, 02, 06				Right
		1	2, 6		11, 12, 14, 15, 16				Right
		1	2, 6		51, 52, 54, 55, 56				Right
		1	3, 7		12, 15, 16				Right
3									NUT
	05103731AA	4	2, 6		01, 02, 06				
		4	2, 6		11, 12, 14, 15, 16				
		4	2, 6		51, 52, 54, 55, 56				
		4	3, 7		12, 15, 16				
4									SCREW
	06104022AA	4	2, 6		01, 02, 06				
		4	2, 6		11, 12, 14, 15, 16				
		4	2, 6		51, 52, 54, 55, 56				
		4	3, 7		12, 15, 16				

SPRINTER (VA)

SERIES	LINE	BODY	ENGINE	TRANSMISSION
L = LOWLINE	3 = HD DODGE 2WD 6 = Lt. Duty DODGE 4WD 2 = Med. Duty DODGE 2WD 7 = Med. Duty DODGE 4WD	55 = Wagon 140" 54 = Wagon 118" 52 = Wagon 140" 51 = Wagon 118" 12 = Van 140" 11 = Van 118" 06 = Front Section 158" 14 = Van 118" 15 = Van 140" 16 = Van 158" 56 = Wagon 158" 01 = Chassis Forward Control 118" 02 = Chassis Forward Control 140"	EX8 = Engine-2.7L I5 Mercedes Turbo Diesel	DGJ = Transmission-5-Spd. Automatic,W5A580

AR = use ase required - = Non illustrrated part

Hood and Hood Release
Figure SVA-510

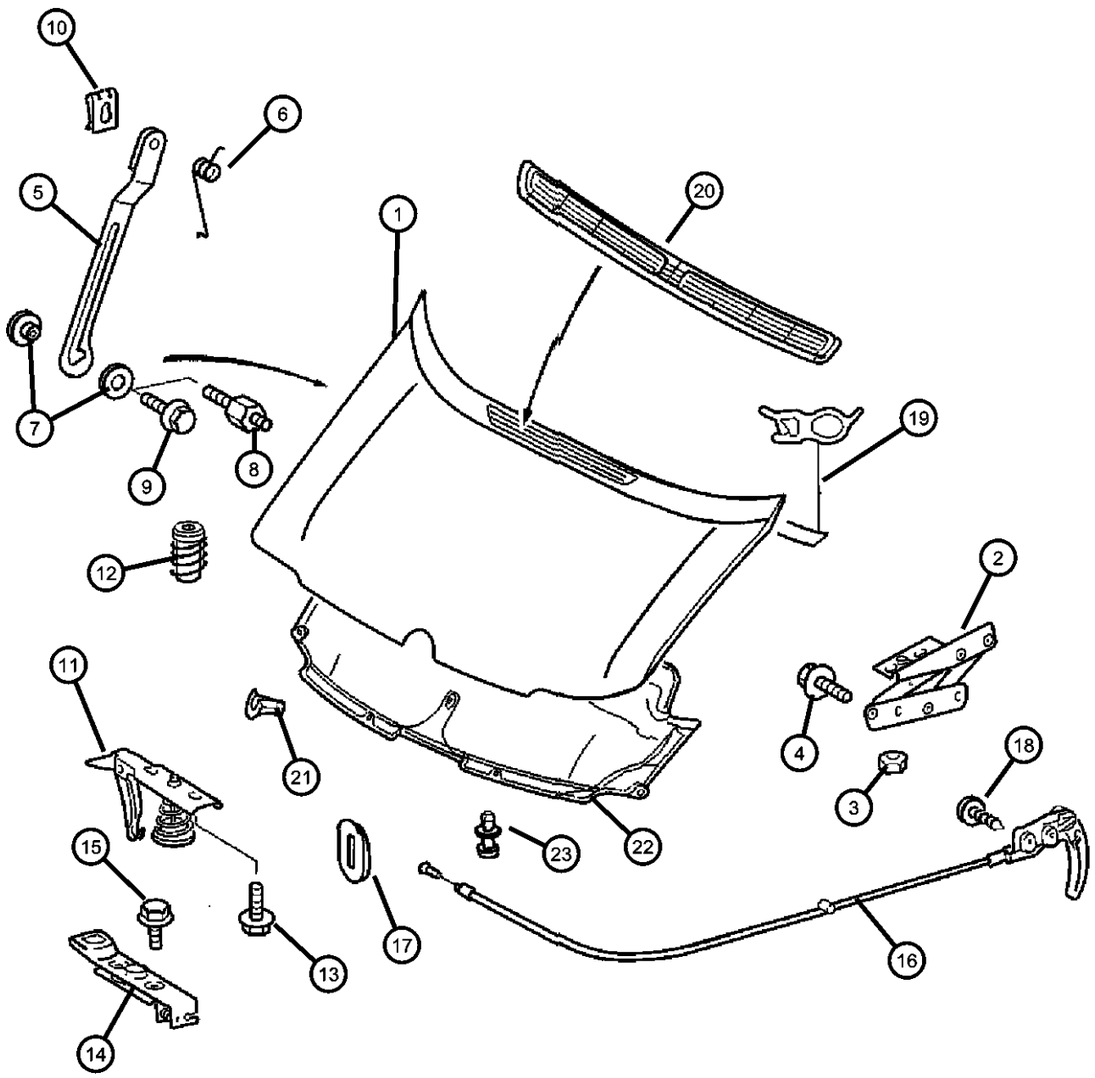

ITEM	PART NUMBER	QTY	LINE	SERIES	BODY	ENGINE	TRANS	TRIM	DESCRIPTION
5									PROP, Hood
	05104407AA	1	2, 6		01, 02, 06				
		1	2, 6		11, 12, 14, 15, 16				
		1	2, 6		51, 52, 54, 55, 56				
		1	3, 7		12, 15, 16				
6									SPRING
	05104546AA	1	2, 6		01, 02, 06				
		1	2, 6		11, 12, 14, 15, 16				
		1	2, 6		51, 52, 54, 55, 56				
		1	3, 7		12, 15, 16				
7									BUSHING, Hood Prop Rod Pivot
	05104545AA	2	2, 6		01, 02, 06				
		2	2, 6		11, 12, 14, 15, 16				
		2	2, 6		51, 52, 54, 55, 56				
		2	3, 7		12, 15, 16				
8									SCREW
	05104542AA	1	2, 6		01, 02, 06				
		1	2, 6		11, 12, 14, 15, 16				
		1	2, 6		51, 52, 54, 55, 56				
		1	3, 7		12, 15, 16				
9									SCREW
	06104024AA	1	3, 7		12, 15, 16				
		1	2, 6		01, 02, 06				
		1	2, 6		11, 12, 14, 15, 16				

SPRINTER (VA)

SERIES	LINE	BODY	ENGINE	TRANSMISSION
L = LOWLINE	3 = HD DODGE 2WD 6 = Lt. Duty DODGE 4WD 2 = Med. Duty DODGE 2WD 7 = Med. Duty DODGE 4WD	55 = Wagon 140" 54 = Wagon 118" 52 = Wagon 140" 51 = Wagon 118" 12 = Van 140" 11 = Van 118" 06 = Front Section 158" 14 = Van 118" 15 = Van 140" 16 = Van 158" 56 = Wagon 158" 01 = Chassis Forward Control 118" 02 = Chassis Forward Control 140"	EX8 = Engine-2.7L I5 Mercedes Turbo Diesel	DGJ = Transmission-5-Spd. Automatic,W5A580

AR = use ase required - = Non illustrrated part

Hood and Hood Release
Figure SVA-510

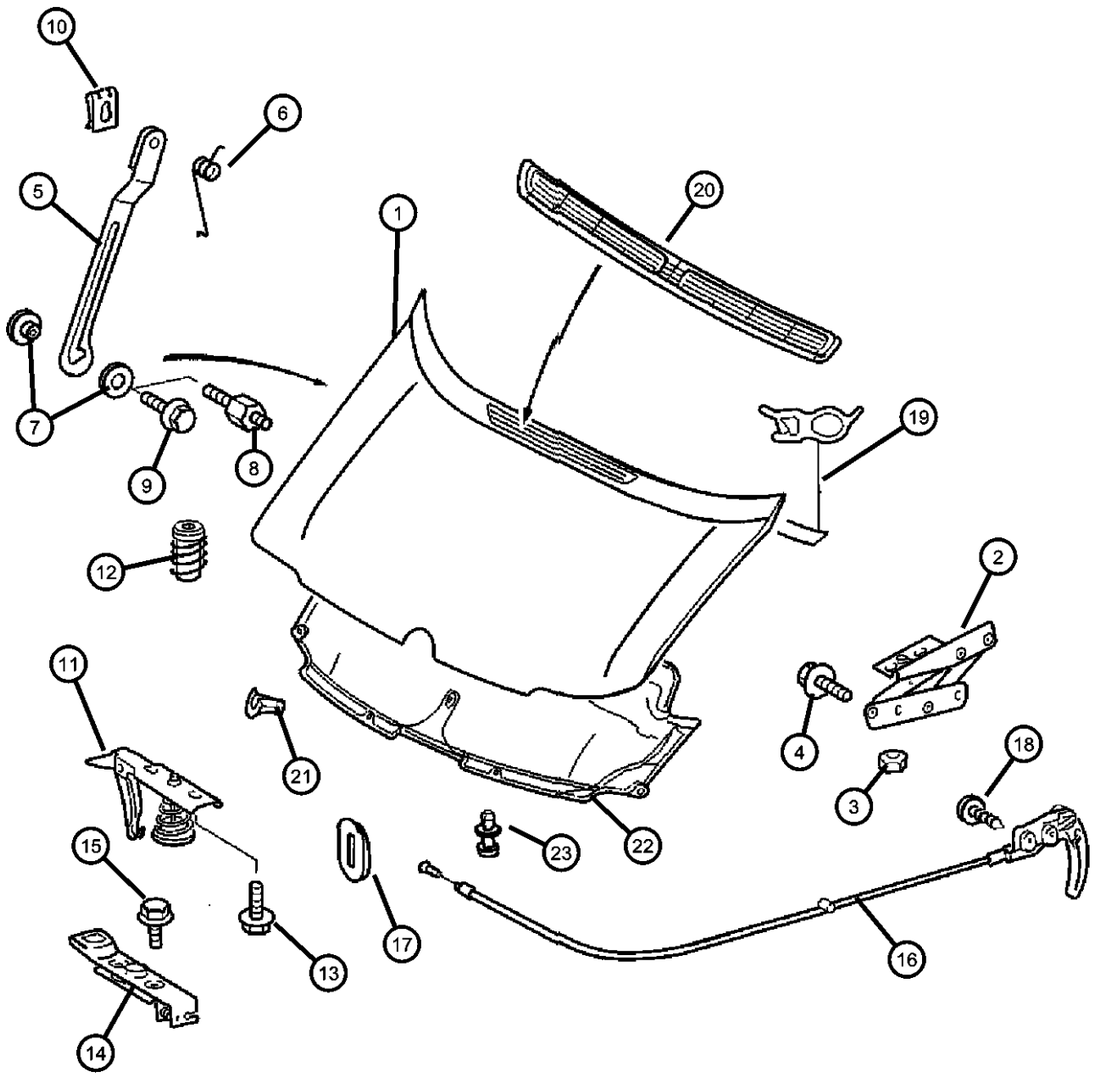

ITEM	PART NUMBER	QTY	LINE	SERIES	BODY	ENGINE	TRANS	TRIM	DESCRIPTION
		1	2, 6		51, 52, 54, 55, 56				
10									CLIP, Hood
	05126111AA	1	2, 6		11, 12, 14, 15, 16				
		1	2, 6		51, 52, 54, 55, 56				
		1	3, 7		12, 15, 16				
11									STRIKER, Hood Latch
	05104401AA	1	3, 7		12, 15, 16				
		1	2, 6		11, 12, 14, 15, 16				
		1	2, 6		51, 52, 54, 55, 56				
12									BUMPER, Rubber
	05134041AA	2	2, 6		11, 12, 14, 15, 16				
		2	2, 6		51, 52, 54, 55, 56				
		2	3, 7		12, 15, 16				
13	05073824AA	2							SCREW
14									LATCH, Hood
	05104028AA	1	2, 6		01, 02, 06				
		1	2, 6		11, 12, 14, 15, 16				
		1	2, 6		51, 52, 54, 55, 56				
		1	3, 7		12, 15, 16				
15									SCREW
	05133476AA	3	2, 6		01, 02, 06				
		2	2, 6		11, 12, 14, 15, 16				
		2	2, 6		51, 52, 54, 55, 56				

SPRINTER (VA)

SERIES	LINE	BODY	ENGINE	TRANSMISSION
L = LOWLINE	3 = HD DODGE 2WD 6 = Lt. Duty DODGE 4WD 2 = Med. Duty DODGE 2WD 7 = Med. Duty DODGE 4WD	55 = Wagon 140" 54 = Wagon 118" 52 = Wagon 140" 51 = Wagon 118" 12 = Van 140" 11 = Van 118" 06 = Front Section 158" 14 = Van 118" 15 = Van 140" 16 = Van 158" 56 = Wagon 158" 01 = Chassis Forward Control 118" 02 = Chassis Forward Control 140"	EX8 = Engine-2.7L I5 Mercedes Turbo Diesel	DGJ = Transmission-5-Spd. Automatic,W5A580

AR = use ase required - = Non illustrrated part

Hood and Hood Release
Figure SVA-510

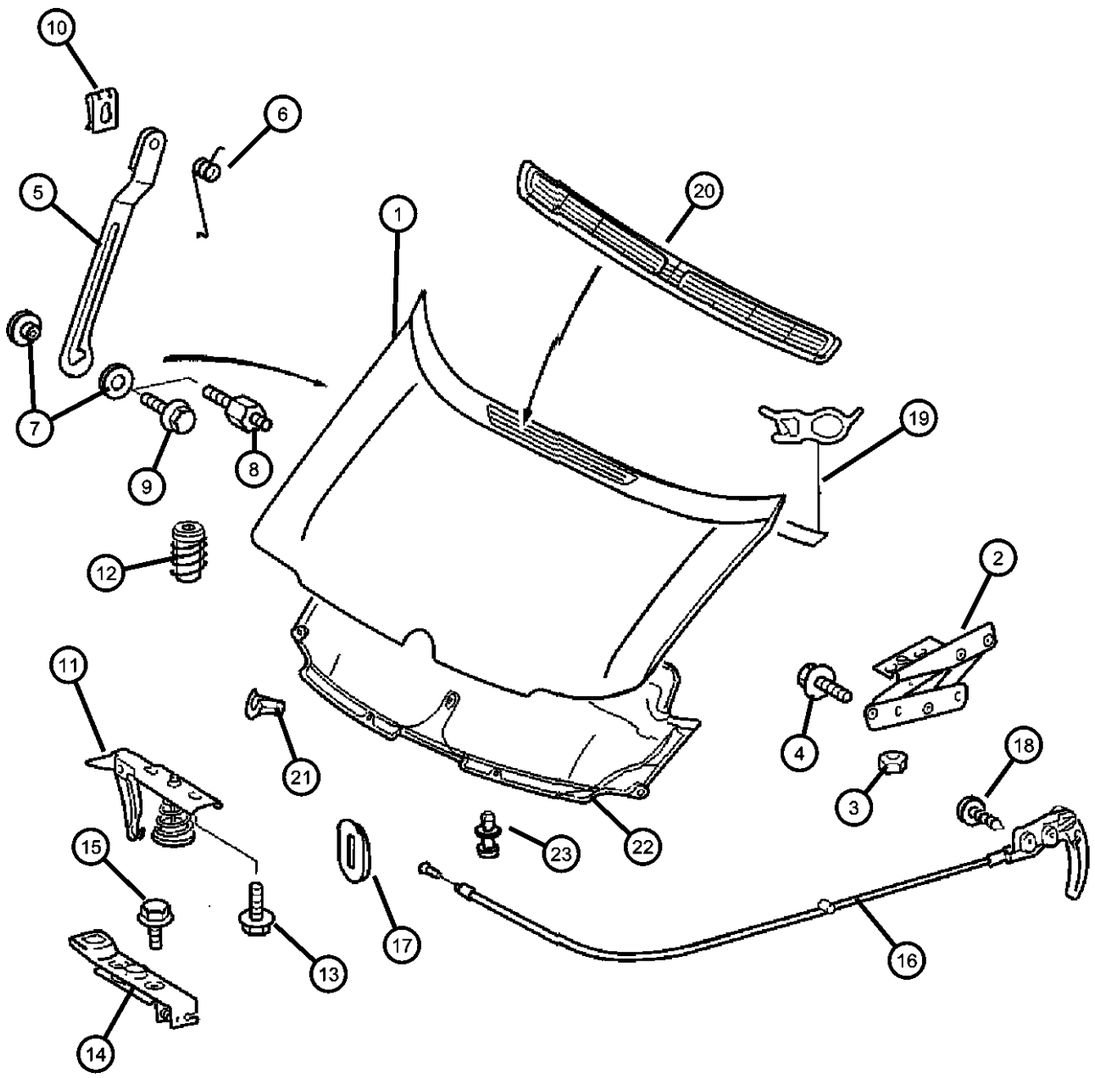

ITEM	PART NUMBER	QTY	LINE	SERIES	BODY	ENGINE	TRANS	TRIM	DESCRIPTION
		3	3, 7		12, 15, 16				
16									CABLE, Hood Release
	05104405AA	1	3, 7		12, 15, 16				
		1	2, 6		01, 02, 06				
		1	2, 6		11, 12, 14, 15, 16				
		1	2, 6		51, 52, 54, 55, 56				
17									GROMMET, Door Wiring
	05133935AA	1	3, 7		12, 15, 16				
		1	2, 6		11, 12, 14, 15, 16				
		1	2, 6		51, 52, 54, 55, 56				
18									SCREW
	06104507AA	2	2, 6		01, 02, 06				
		2	2, 6		11, 12, 14, 15, 16				
		2	2, 6		51, 52, 54, 55, 56				
19									SEAL, Hood
	05134040AA	1	2, 6		01, 02, 06				
		1	2, 6		11, 12, 14, 15, 16				
		1	2, 6		51, 52, 54, 55, 56				
		1	3, 7		12, 15, 16				
20									GRILLE, Hood
	05124653AA	1	3, 7						
		1	2, 6		01, 02, 06				
21									GROMMET
	05103932AA	1	2, 6		11, 12, 14, 15, 16				

SPRINTER (VA)

SERIES	LINE	BODY	ENGINE	TRANSMISSION
L = LOWLINE	3 = HD DODGE 2WD 6 = Lt. Duty DODGE 4WD 2 = Med. Duty DODGE 2WD 7 = Med. Duty DODGE 4WD	55 = Wagon 140" 54 = Wagon 118" 52 = Wagon 140" 51 = Wagon 118" 12 = Van 140" 11 = Van 118" 06 = Front Section 158" 14 = Van 118" 15 = Van 140" 16 = Van 158" 56 = Wagon 158" 01 = Chassis Forward Control 118" 02 = Chassis Forward Control 140"	EX8 = Engine-2.7L I5 Mercedes Turbo Diesel	DGJ = Transmission-5-Spd. Automatic,W5A580

Hood and Hood Release
Figure SVA-510

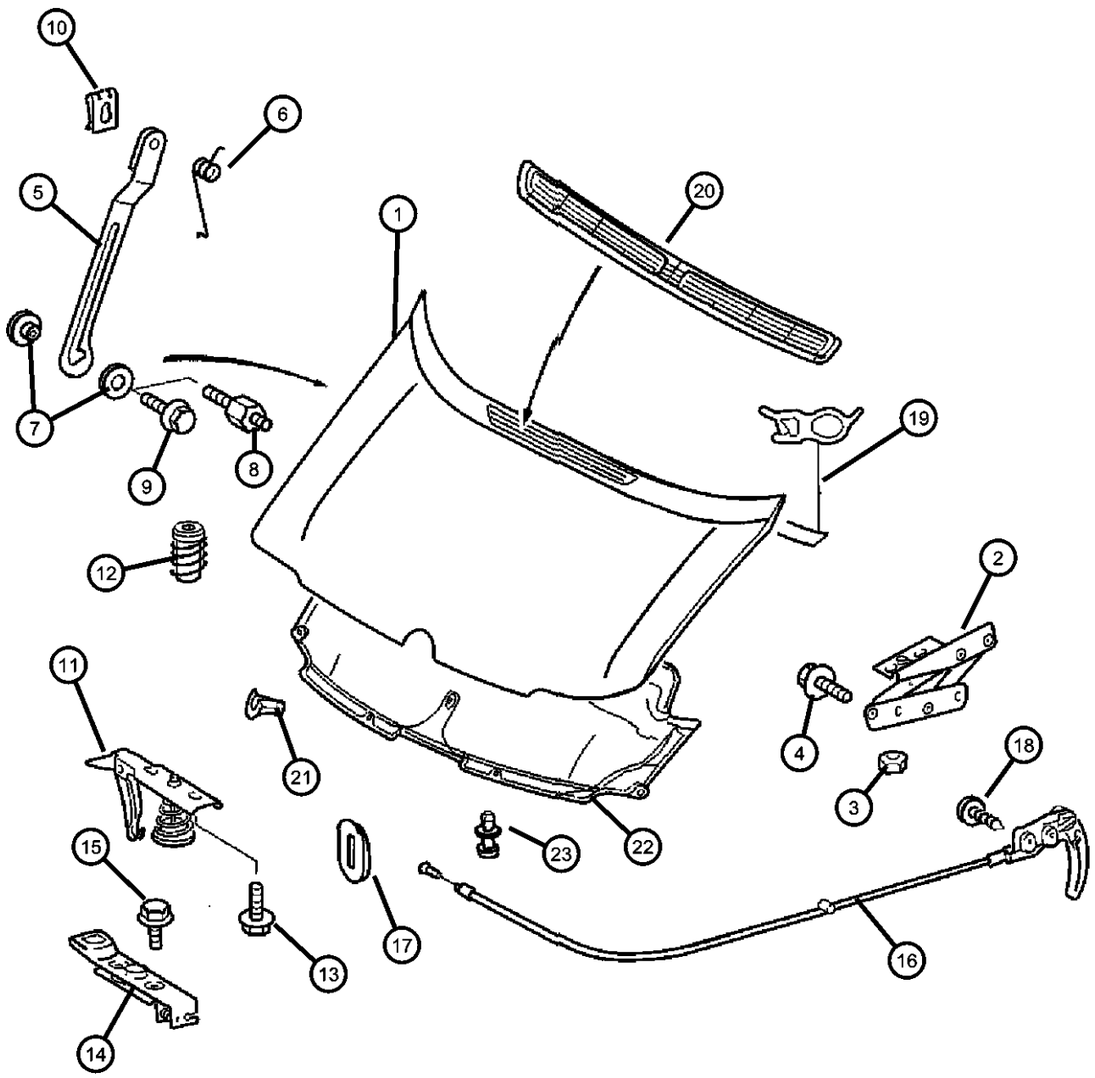

ITEM	PART NUMBER	QTY	LINE	SERIES	BODY	ENGINE	TRANS	TRIM	DESCRIPTION
		1	3, 7		12, 15, 16				
		1	2, 6		51, 52, 54, 55, 56				
22									INSULATION, Hood
	05104486AA	1	2, 6		01, 02, 06				
		1	2, 6		11, 12, 14, 15, 16				
		1	2, 6		51, 52, 54, 55, 56				
		1	3, 7		12, 15, 16				
23									RIVET
	05103921AA	12	2, 6		01, 02, 06				
		12	2, 6		11, 12, 14, 15, 16				
		12	2, 6		51, 52, 54, 55, 56				
		12	3, 7		12, 15, 16				

SPRINTER (VA)

SERIES	LINE	BODY	ENGINE	TRANSMISSION
L = LOWLINE	3 = HD DODGE 2WD 6 = Lt. Duty DODGE 4WD 2 = Med. Duty DODGE 2WD 7 = Med. Duty DODGE 4WD	55 = Wagon 140" 54 = Wagon 118" 52 = Wagon 140" 51 = Wagon 118" 12 = Van 140" 11 = Van 118" 06 = Front Section 158" 14 = Van 118" 15 = Van 140" 16 = Van 158" 56 = Wagon 158" 01 = Chassis Forward Control 118" 02 = Chassis Forward Control 140"	EX8 = Engine-2.7L I5 Mercedes Turbo Diesel	DGJ = Transmission-5-Spd. Automatic,W5A580

AR = use ase required - = Non illustrrated part

Cowl and Dash
Figure SVA-610

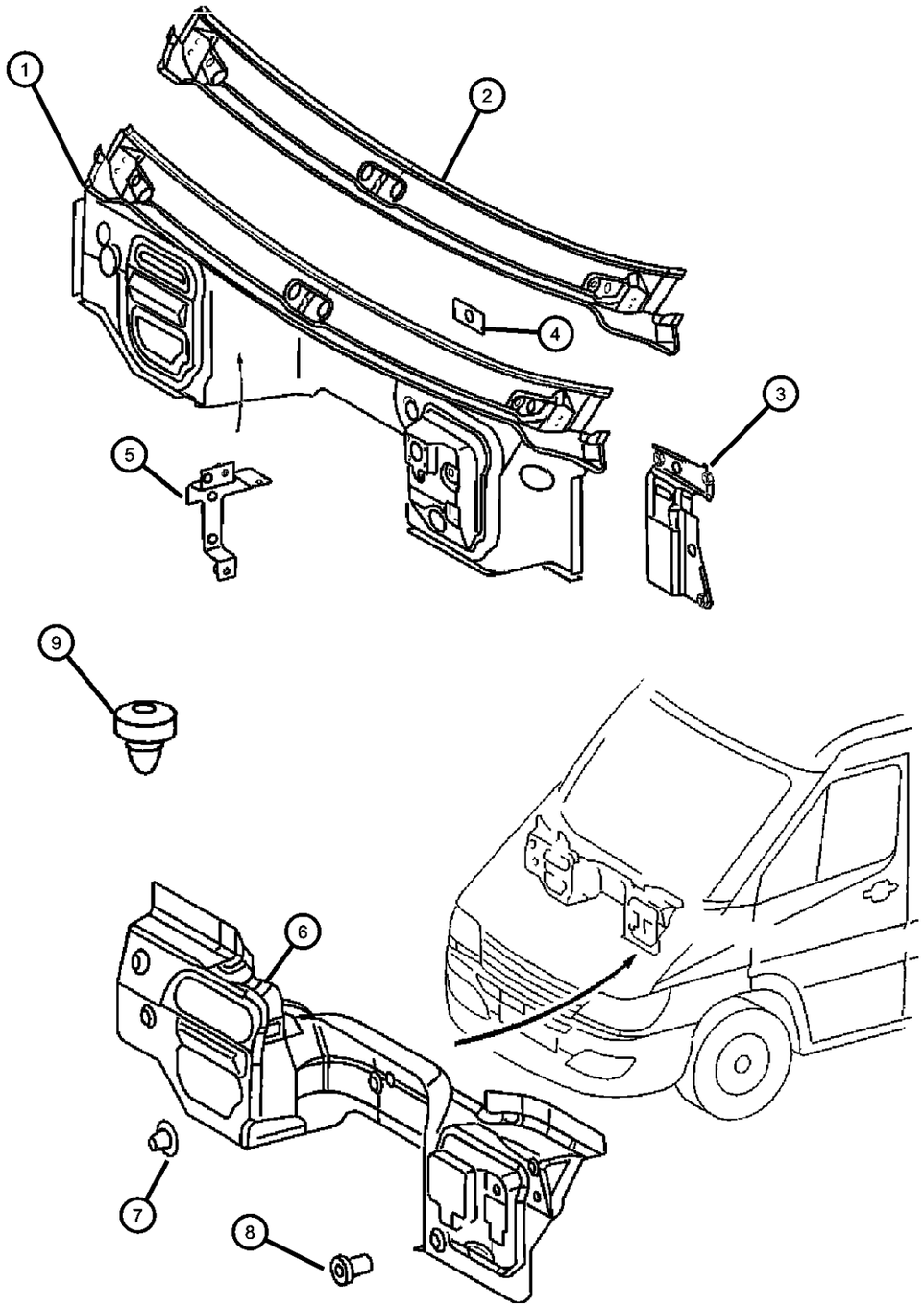

ITEM	PART NUMBER	QTY	LINE	SERIES	BODY	ENGINE	TRANS	TRIM	DESCRIPTION
1									PANEL, Dash Upper
	05121578AA	1	2, 6		11, 12, 14, 15, 16				
		1	2, 6		51, 52, 54, 55, 56				
		1	3, 7		12, 15, 16				
2									PANEL, Cowl Top
	05104164AA	1	2, 6		11, 12, 14, 15, 16				
		1	2, 6		51, 52, 54, 55, 56				
		1	3, 7		12, 15, 16				
3									BRACKET, Dash
	05121583AA	1	2, 6		11, 12, 14, 15, 16				
		1	2, 6		51, 52, 54, 55, 56				
		1	3, 7		12, 15, 16				
4									PLATE
	05121447AA	1	2, 6		11, 12, 14, 15, 16				
		1	2, 6		51, 52, 54, 55, 56				
		1	3, 7		12, 15, 16				
5									BRACKET
	05124627AA	1	2, 6		11, 12, 14, 15, 16				
		1	2, 6		51, 52, 54, 55, 56				
		1	3, 7		12, 15, 16				
6									SILENCER, Dash Panel-Engine Compartment
	05122526AA	1	2, 6		11, 12, 14, 15, 16				
		1	2, 6		51, 52, 54, 55, 56				

SPRINTER (VA)

SERIES	LINE	BODY	ENGINE	TRANSMISSION
L = LOWLINE	3 = HD DODGE 2WD 6 = Lt. Duty DODGE 4WD 2 = Med. Duty DODGE 2WD 7 = Med. Duty DODGE 4WD	55 = Wagon 140" 54 = Wagon 118" 52 = Wagon 140" 51 = Wagon 118" 12 = Van 140" 11 = Van 118" 06 = Front Section 158" 14 = Van 118" 15 = Van 140" 16 = Van 158" 56 = Wagon 158" 01 = Chassis Forward Control 118" 02 = Chassis Forward Control 140"	EX8 = Engine-2.7L I5 Mercedes Turbo Diesel	DGJ = Transmission-5-Spd. Automatic,W5A580

Cowl and Dash
Figure SVA-610

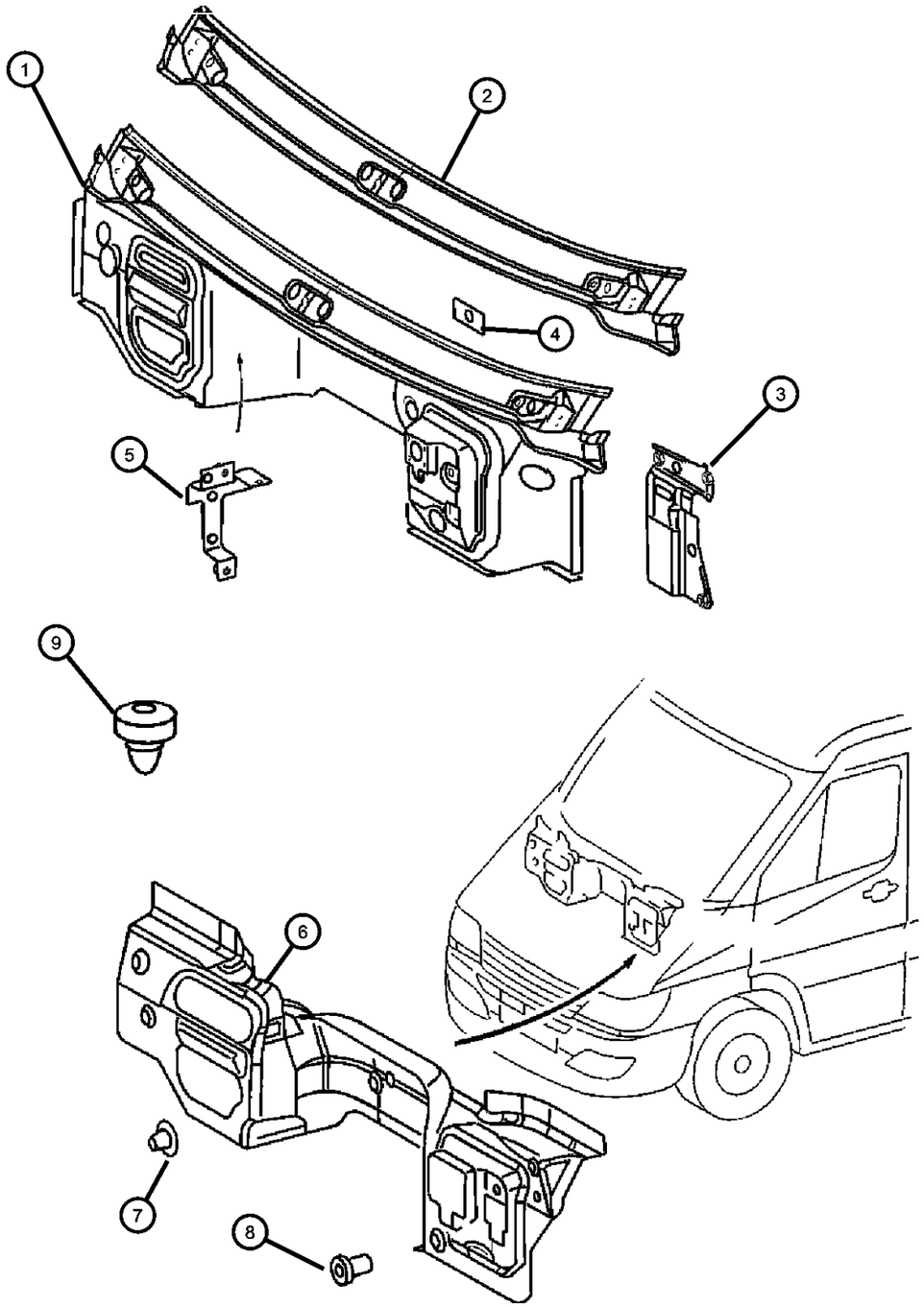

ITEM	PART NUMBER	QTY	LINE	SERIES	BODY	ENGINE	TRANS	TRIM	DESCRIPTION
		1	3, 7		12, 15, 16				
7									PLUG, Button
	05097041AA	4	2, 6		11, 12, 14, 15, 16				
		4	2, 6		51, 52, 54, 55, 56				
		4	3, 7		12, 15, 16				
8									PLUG, Button
	05125592AA	2	2, 6		11, 12, 14, 15, 16				
		2	2, 6		51, 52, 54, 55, 56				
		2	3, 7		12, 15, 16				
9									BUMPER, Rubber
	05103724AA	2	2, 6		11, 12, 14, 15, 16				
		2	2, 6		51, 52, 54, 55, 56				
		2	3, 7		12, 15, 16				

SPRINTER (VA)

SERIES	LINE	BODY	ENGINE	TRANSMISSION
L = LOWLINE	3 = HD DODGE 2WD 6 = Lt. Duty DODGE 4WD 2 = Med. Duty DODGE 2WD 7 = Med. Duty DODGE 4WD	55 = Wagon 140" 54 = Wagon 118" 52 = Wagon 140" 51 = Wagon 118" 12 = Van 140" 11 = Van 118" 06 = Front Section 158" 14 = Van 118" 15 = Van 140" 16 = Van 158" 56 = Wagon 158" 01 = Chassis Forward Control 118" 02 = Chassis Forward Control 140"	EX8 = Engine-2.7L I5 Mercedes Turbo Diesel	DGJ = Transmission-5-Spd. Automatic,W5A580

AR = use ase required - = Non illustrrated part

<< RETURN TO GROUP INDEX

Inner Paneling in Cab, Cowl
Figure SVA-620

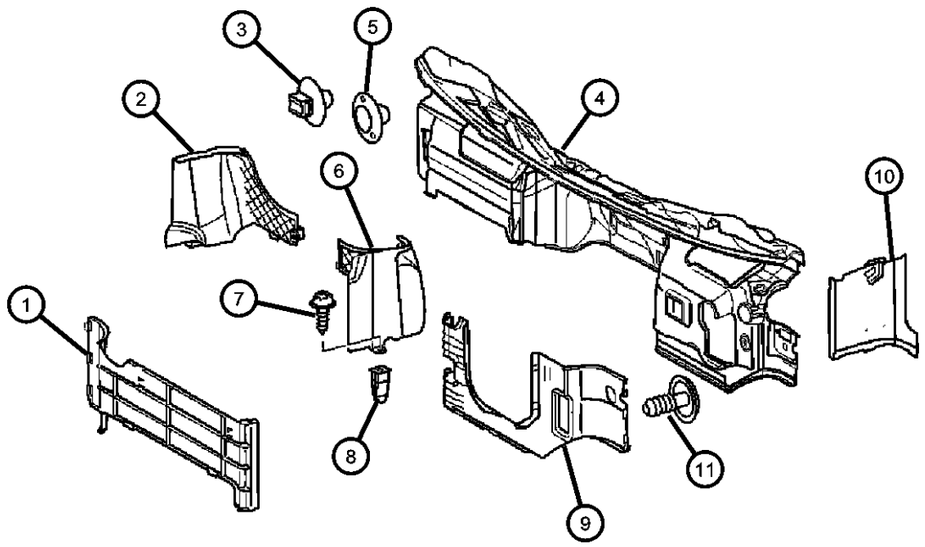

ITEM	PART NUMBER	QTY	LINE	SERIES	BODY	ENGINE	TRANS	TRIM	DESCRIPTION
1									SILENCER, Dash And Cowl Sides
	05131688AA	1	2, 6		11, 12, 14, 15, 16				
		1	2, 6		51, 52, 54, 55, 56				
		1	3, 7		12, 15, 16				
2									PANEL, Bulkhead Support
	05122864AA	1	2, 6		11, 12, 14, 15, 16				
		1	2, 6		51, 52, 54, 55, 56				
		1	3, 7		12, 15, 16				
3									PLUG, Button
	05125592AA	1	2, 6		51, 52, 54, 55, 56				
		1	2, 6		11, 12, 14, 15, 16				
		1	3, 7		12, 15, 16				
4									PANEL, Cowl
	05122857AA	1	2, 6		11, 12, 14, 15, 16				
		1	2, 6		51, 52, 54, 55, 56				
		1	3, 7		12, 15, 16				
5									PLUG, Button
	05097041AA	1	2, 6		11, 12, 14, 15, 16				
		1	2, 6		51, 52, 54, 55, 56				
		3	3, 7		12, 15, 16				
6									PANEL, Bulkhead Support
	05122862AA	1	2, 6		11, 12, 14, 15, 16				
		1	2, 6		51, 52, 54, 55, 56				

SPRINTER (VA)

SERIES	LINE	BODY	ENGINE	TRANSMISSION
L = LOWLINE	3 = HD DODGE 2WD 6 = Lt. Duty DODGE 4WD 2 = Med. Duty DODGE 2WD 7 = Med. Duty DODGE 4WD	55 = Wagon 140" 54 = Wagon 118" 52 = Wagon 140" 51 = Wagon 118" 12 = Van 140" 11 = Van 118" 06 = Front Section 158" 14 = Van 118" 15 = Van 140" 16 = Van 158" 56 = Wagon 158" 01 = Chassis Forward Control 118" 02 = Chassis Forward Control 140"	EX8 = Engine-2.7L I5 Mercedes Turbo Diesel	DGJ = Transmission-5-Spd. Automatic,W5A580

AR = use ase required - = Non illustrrated part

Inner Paneling in Cab, Cowl
Figure SVA-620

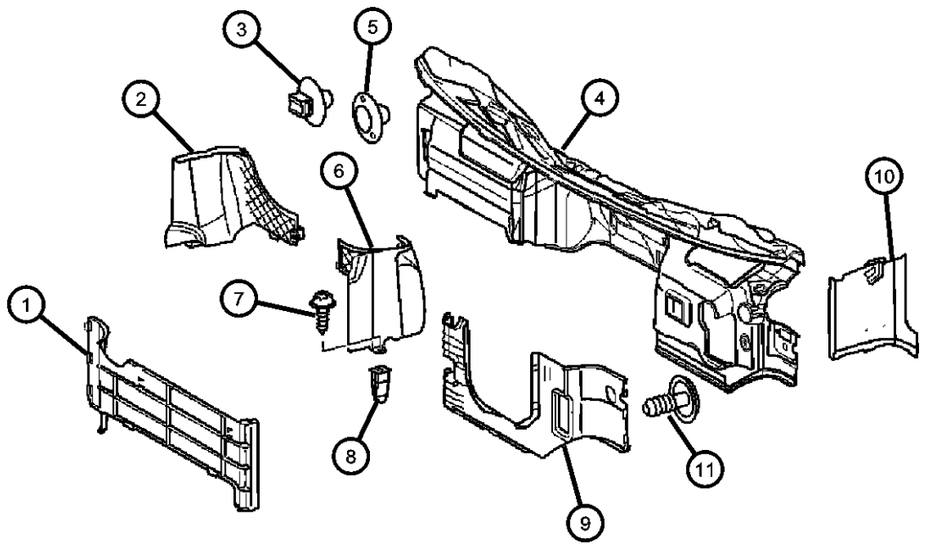

ITEM	PART NUMBER	QTY	LINE	SERIES	BODY	ENGINE	TRANS	TRIM	DESCRIPTION
		1	3, 7		12, 15, 16				
7									SCREW, Tapping
	06104574AA	2	2, 6		11, 12, 14, 15, 16				
		2	2, 6		51, 52, 54, 55, 56				
		2	3, 7		12, 15, 16				
8									NUT, Plastic Snap-in
	05098837AA	8	2, 6		11, 12, 14, 15, 16				
		8	2, 6		51, 52, 54, 55, 56				
		8	3, 7		12, 15, 16				
9									PANEL, Dash
	05131685AA	1	2, 6		11, 12, 14, 15, 16				
		1	2, 6		51, 52, 54, 55, 56				
		1	3, 7		12, 15, 16				
10									PANEL, Cowl Side
	05104266AA	1	2, 6		11, 12, 14, 15, 16				Right
		1	2, 6		51, 52, 54, 55, 56				Right
		1	3, 7		12, 15, 16				Right
	05122865AA	1	2, 6		11, 12, 14, 15, 16				Left
		1	2, 6		51, 52, 54, 55, 56				Left
		1	3, 7		12, 15, 16				Left
11									PLUG, Body
	1AS62DX9AA	2	2, 6		11, 12, 14, 15, 16				

SPRINTER (VA)

SERIES	LINE	BODY	ENGINE	TRANSMISSION
L = LOWLINE	3 = HD DODGE 2WD 6 = Lt. Duty DODGE 4WD 2 = Med. Duty DODGE 2WD 7 = Med. Duty DODGE 4WD	55 = Wagon 140" 54 = Wagon 118" 52 = Wagon 140" 51 = Wagon 118" 12 = Van 140" 11 = Van 118" 06 = Front Section 158" 14 = Van 118" 15 = Van 140" 16 = Van 158" 56 = Wagon 158" 01 = Chassis Forward Control 118" 02 = Chassis Forward Control 140"	EX8 = Engine-2.7L I5 Mercedes Turbo Diesel	DGJ = Transmission-5-Spd. Automatic,W5A580

Inner Paneling in Cab, Cowl
Figure SVA-620

ITEM	PART NUMBER	QTY	LINE	SERIES	BODY	ENGINE	TRANS	TRIM	DESCRIPTION
		2	2, 6		51, 52, 54, 55, 56				
		2	3, 7		12, 15, 16				

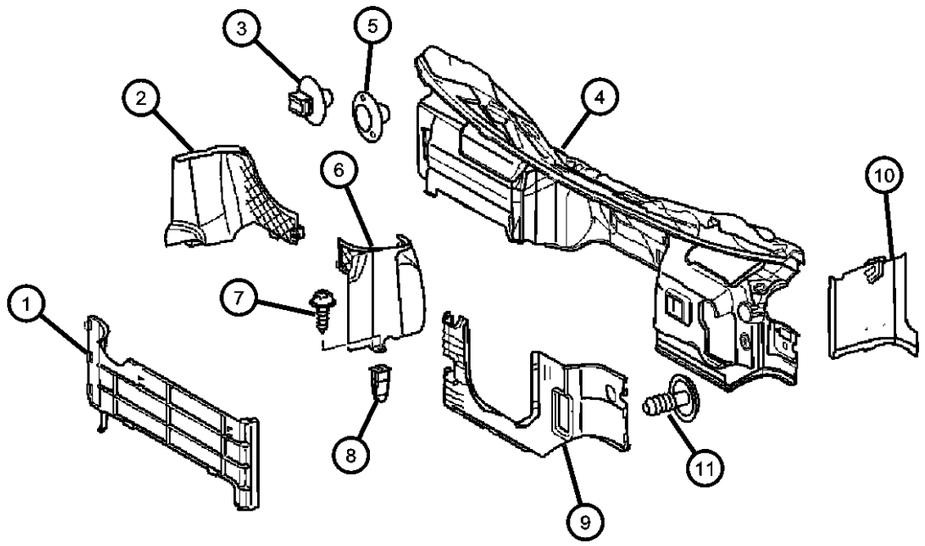

SPRINTER (VA)

SERIES	LINE	BODY	ENGINE	TRANSMISSION
L = LOWLINE	3 = HD DODGE 2WD 6 = Lt. Duty DODGE 4WD 2 = Med. Duty DODGE 2WD 7 = Med. Duty DODGE 4WD	55 = Wagon 140" 54 = Wagon 118" 52 = Wagon 140" 51 = Wagon 118" 12 = Van 140" 11 = Van 118" 06 = Front Section 158" 14 = Van 118" 15 = Van 140" 16 = Van 158" 56 = Wagon 158" 01 = Chassis Forward Control 118" 02 = Chassis Forward Control 140"	EX8 = Engine-2.7L I5 Mercedes Turbo Diesel	DGJ = Transmission-5-Spd. Automatic,W5A580

AR = use ase required - = Non illustrrated part

Windshield, Backlite and Rear View Mirror
Figure SVA-710

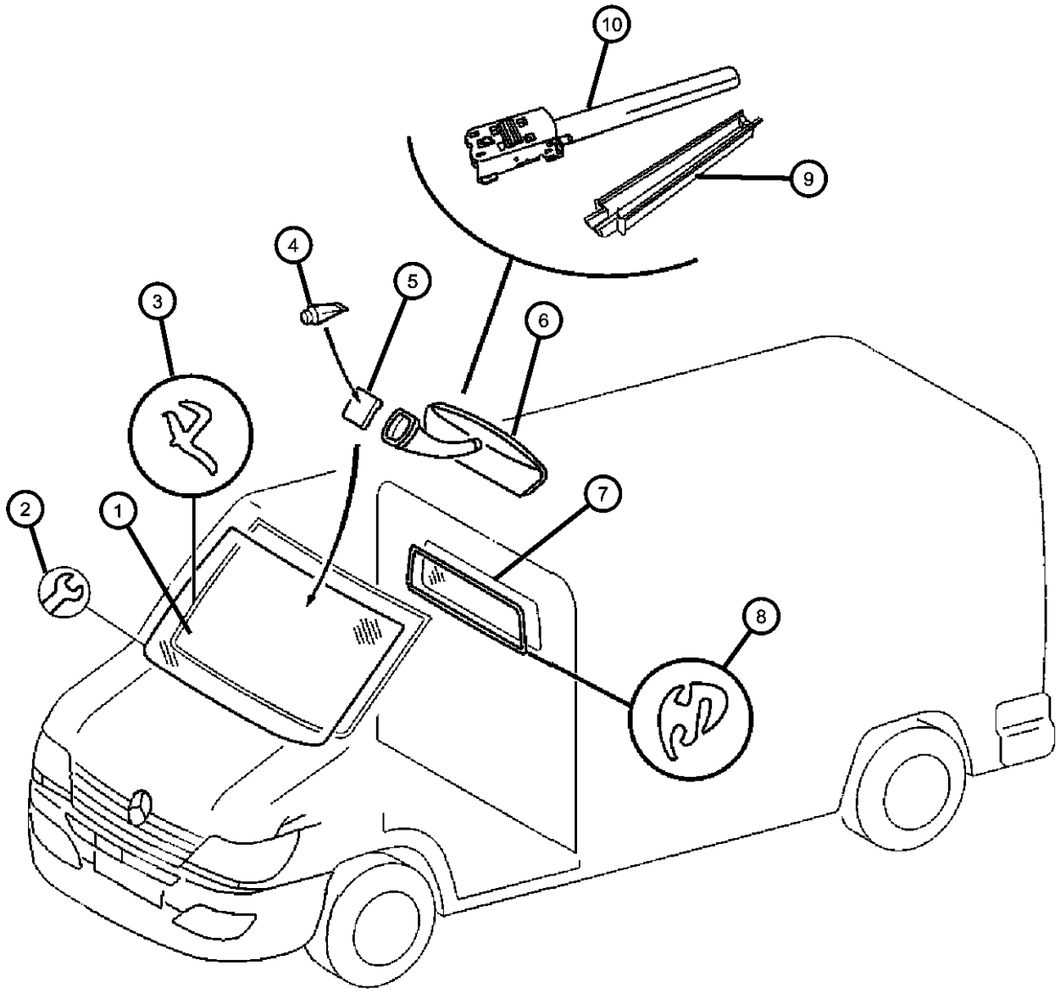

ITEM	PART NUMBER	QTY	LINE	SERIES	BODY	ENGINE	TRANS	TRIM	DESCRIPTION
1									WINDSHIELD
	05103585AA	1	2, 6		11, 12, 14, 15, 16				Solar, Without Shade Band
		1	2, 6		51, 52, 54, 55, 56				Solar, Without Shade Band
		1	3, 7		12, 15, 16				Solar, Without Shade Band
	05103586AA	1	2, 6		11, 12, 14, 15, 16				Solar, With Shade Band
		1	2, 6		51, 52, 54, 55, 56				Solar, With Shade Band
		1	3, 7		12, 15, 16				Solar, With Shade Band
	05122272AA	1	2, 6		11, 12, 14, 15, 16				Heated, With Rain Sensor
		1	2, 6		51, 52, 54, 55, 56				Heated, With Rain Sensor
		1	3, 7		12, 15, 16				Heated, With Rain Sensor
	05122274AA	1	2, 6		01, 02, 06				Heated, With Rain Sensor
		1	3, 7		02, 06				Heated, With Rain Sensor
	05122335AA	1	2, 6		01, 02, 06				Solar, With Shade Band
		1	3, 7		02, 06				Solar, With Shade Band
	05136429AA	1	2, 6		01, 02, 06				Solar, Without Shade Band
		1	3, 7		02, 06				Solar, Without Shade Band
2									REPAIR KIT, Windshield
	05104594AA	1	2, 6		11, 12, 14, 15, 16				
		1	2, 6		51, 52, 54, 55, 56				
		1	3, 7		12, 15, 16				
3									WEATHERSTRIP
	05103584AA	1	2, 6		11, 12, 14, 15, 16				
		1	2, 6		51, 52, 54, 55, 56				
		1	3, 7		12, 15, 16				

SPRINTER (VA)

SERIES	LINE	BODY	ENGINE	TRANSMISSION
L = LOWLINE	3 = HD DODGE 2WD 6 = Lt. Duty DODGE 4WD 2 = Med. Duty DODGE 2WD 7 = Med. Duty DODGE 4WD	55 = Wagon 140" 54 = Wagon 118" 52 = Wagon 140" 51 = Wagon 118" 12 = Van 140" 11 = Van 118" 06 = Front Section 158" 14 = Van 118" 15 = Van 140" 16 = Van 158" 56 = Wagon 158" 01 = Chassis Forward Control 118" 02 = Chassis Forward Control 140"	EX8 = Engine-2.7L I5 Mercedes Turbo Diesel	DGJ = Transmission-5-Spd. Automatic,W5A580

Windshield, Backlite and Rear View Mirror
Figure SVA-710

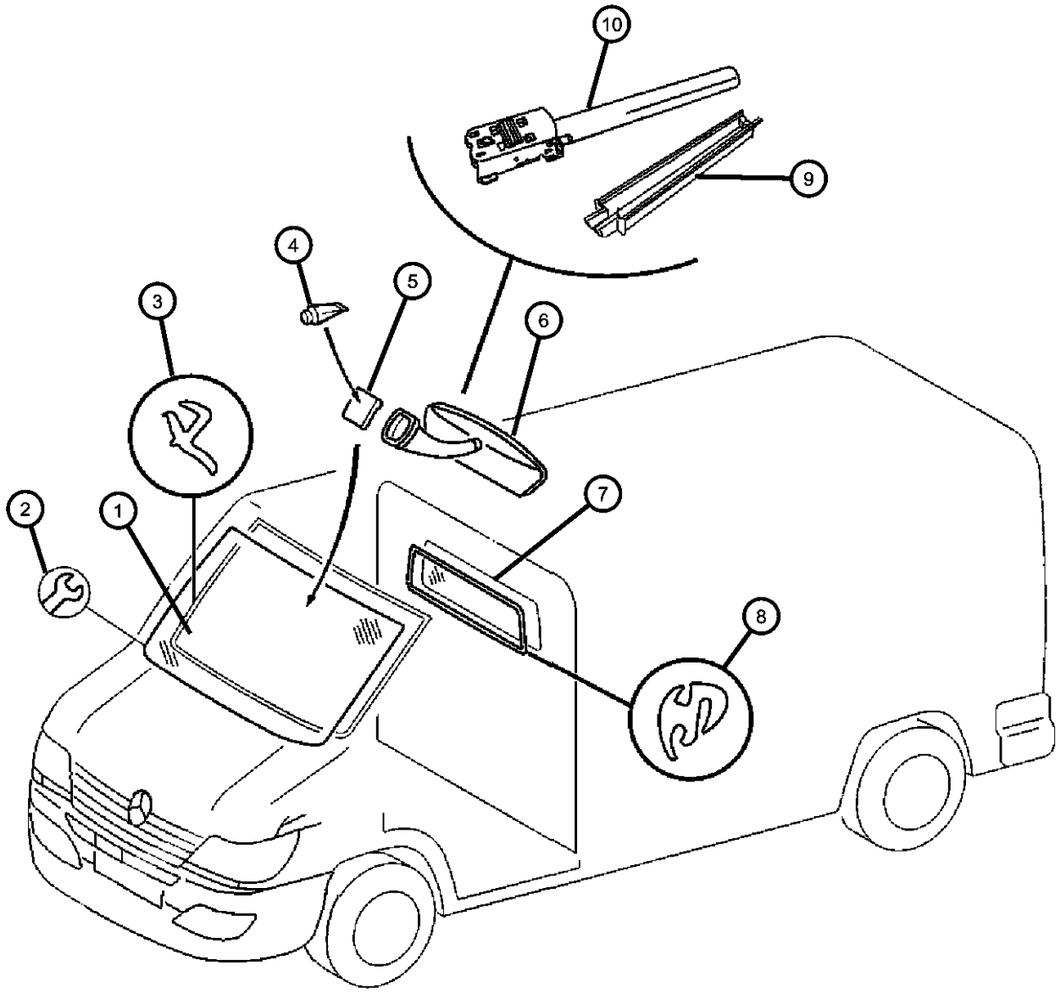

ITEM	PART NUMBER	QTY	LINE	SERIES	BODY	ENGINE	TRANS	TRIM	DESCRIPTION
	05122341AA	1	2, 6		01, 02, 06				
		1	3, 7		02, 06				
4	05073862AA	2							ADHESIVE
5									BUTTON, Rear View Mirror
	05104241AA	1	2, 6		01, 02, 06				
		1	2, 6		11, 12, 14, 15, 16				
		1	2, 6		51, 52, 54, 55, 56				
		1	3, 7		12, 15, 16				
6									MIRROR, Inside Rear View
	05104435AA	1	2, 6		01, 02, 06				
		1	2, 6		11, 12, 14, 15, 16				
		1	2, 6		51, 52, 54, 55, 56				
		1	3, 7		02, 06				
		1	3, 7		12, 15, 16				
	05127266AA	1	2, 6		01, 02, 06				With Rain Sensor [GBF]
		1	2, 6		11, 12, 14, 15, 16				With Rain Sensor [GBF]
		1	2, 6		51, 52, 54, 55, 56				With Rain Sensor [GBF]
		1	3, 7		02, 06				With Rain Sensor [GBF]
7									GLASS, Backlite, Fixed
	05104249AA	1	2, 6		11, 12, 14, 15, 16				
		1	3, 7		12, 15, 16				
8									WEATHERSTRIP, Fixed
	05104250AA	1	2, 6		11, 12, 14, 15, 16				
		1	3, 7		12, 15, 16				

SPRINTER (VA)

SERIES	LINE	BODY	ENGINE	TRANSMISSION
L = LOWLINE	3 = HD DODGE 2WD 6 = Lt. Duty DODGE 4WD 2 = Med. Duty DODGE 2WD 7 = Med. Duty DODGE 4WD	55 = Wagon 140" 54 = Wagon 118" 52 = Wagon 140" 51 = Wagon 118" 12 = Van 140" 11 = Van 118" 06 = Front Section 158" 14 = Van 118" 15 = Van 140" 16 = Van 158" 56 = Wagon 158" 01 = Chassis Forward Control 118" 02 = Chassis Forward Control 140"	EX8 = Engine-2.7L I5 Mercedes Turbo Diesel	DGJ = Transmission-5-Spd. Automatic,W5A580

AR = use ase required - = Non illustrrated part

Windshield, Backlite and Rear View Mirror
Figure SVA-710

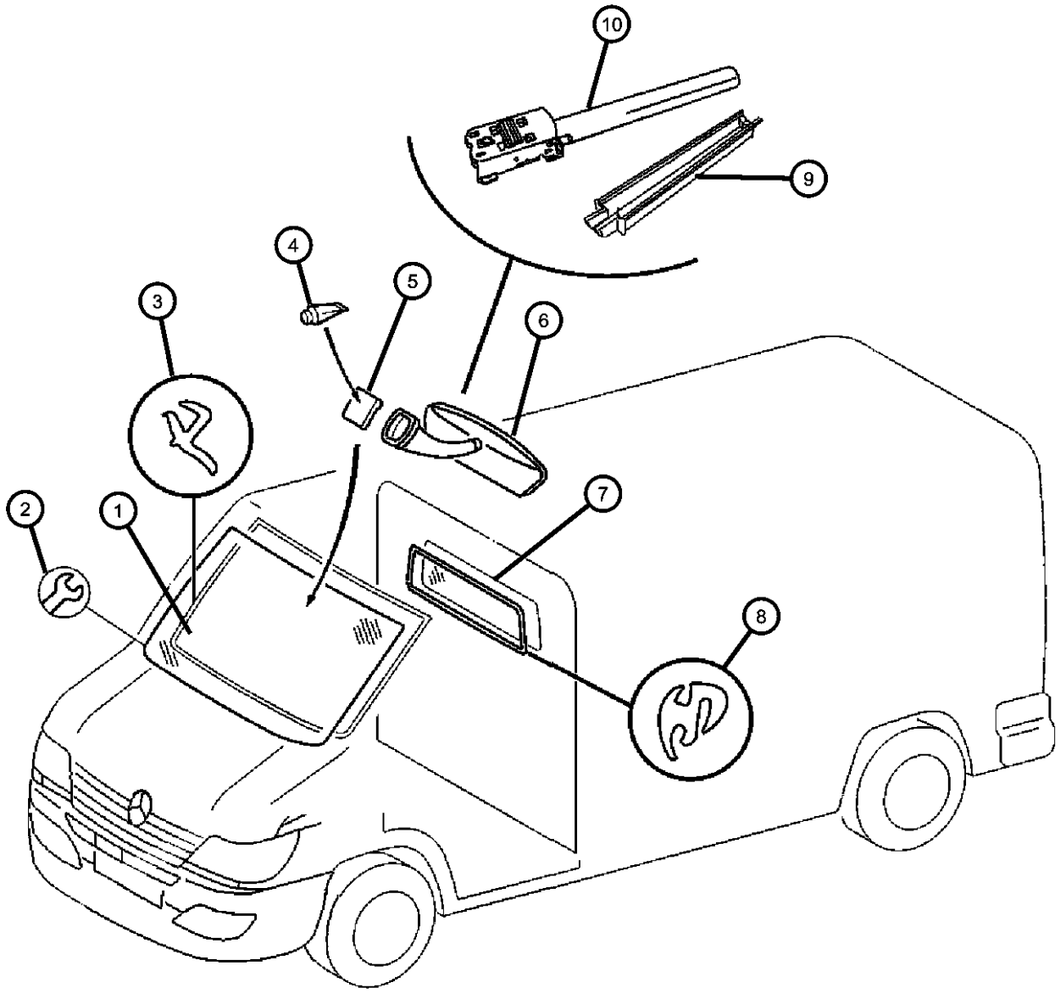

ITEM	PART NUMBER	QTY	LINE	SERIES	BODY	ENGINE	TRANS	TRIM	DESCRIPTION
9									COVER, Rear View Mirror Wire, Outer
	05127268AA	1	2, 6		01, 02, 06				
		1	2, 6		11, 12, 14, 15, 16				
		1	2, 6		51, 52, 54, 55, 56				
		1	3, 7		02, 06				
		1	3, 7		12, 15, 16				
10									COVER, Rear View Mirror Wire, Inner
	05127267AA	1	2, 6		01, 02, 06				
		1	2, 6		11, 12, 14, 15, 16				
		1	2, 6		51, 52, 54, 55, 56				
		1	3, 7		02, 06				
		1	3, 7		12, 15, 16				

SPRINTER (VA)

SERIES	LINE	BODY	ENGINE	TRANSMISSION
L = LOWLINE	3 = HD DODGE 2WD 6 = Lt. Duty DODGE 4WD 2 = Med. Duty DODGE 2WD 7 = Med. Duty DODGE 4WD	55 = Wagon 140" 54 = Wagon 118" 52 = Wagon 140" 51 = Wagon 118" 12 = Van 140" 11 = Van 118" 06 = Front Section 158" 14 = Van 118" 15 = Van 140" 16 = Van 158" 56 = Wagon 158" 01 = Chassis Forward Control 118" 02 = Chassis Forward Control 140"	EX8 = Engine-2.7L I5 Mercedes Turbo Diesel	DGJ = Transmission-5-Spd. Automatic,W5A580

AR = use ase required - = Non illustrrated part

Front Right Side Sliding Glass
Figure SVA-720

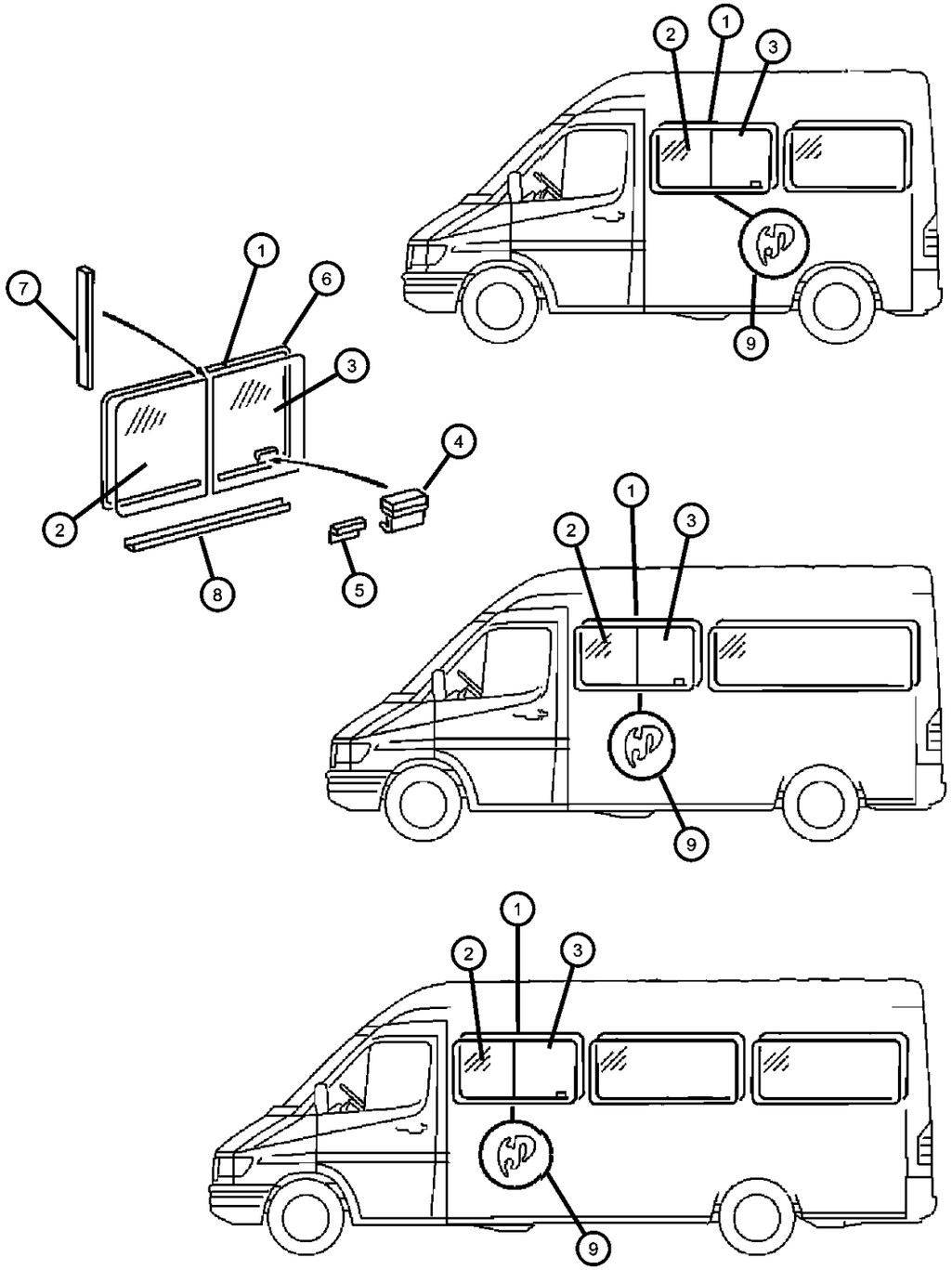

ITEM	PART NUMBER	QTY	LINE	SERIES	BODY	ENGINE	TRANS	TRIM	DESCRIPTION
1									GLASS, Bodyside Window
	05122302AA	1	2, 6		11, 12, 14, 15, 16				Privacy
		1	2, 6		51, 52, 54, 55, 56				Privacy
		1	3, 7		15, 16, 12				Privacy
2									GLASS, Bodyside Window, Fixed
	05134043AA	1	2, 6		11, 12, 14, 15, 16				Privacy
		1	2, 6		51, 52, 54, 55, 56				Privacy
		1	3, 7		12, 15, 16				Privacy
3									GLASS, Sliding Door, Vented
	05123832AA	1	2, 6		11, 12, 14, 15, 16				Privacy
	05134003AA	1	2, 6		51, 52, 54, 55, 56				Privacy
		1	3, 7		12, 15, 16				Privacy
4									HANDLE, Vent Window
	05134004AA	1	2, 6		11, 12, 14, 15, 16				
		1	3, 7		12, 15, 16				
		1	2, 6		51, 52, 54, 55, 56				
5									RETAINER, Side Panel Vent Window
	05133535AA	1	2, 6		11, 12, 14, 15, 16				
		1	2, 6		51, 52, 54, 55, 56				
		1	3, 7		12, 15, 16				
6									WEATHERSTRIP, Side Panel Vent
	05134055AA	2	2, 6		11, 12, 14, 15, 16				
		2	2, 6		51, 52, 54, 55, 56				

SPRINTER (VA)

SERIES	LINE	BODY	ENGINE	TRANSMISSION
L = LOWLINE	3 = HD DODGE 2WD 6 = Lt. Duty DODGE 4WD 2 = Med. Duty DODGE 2WD 7 = Med. Duty DODGE 4WD	55 = Wagon 140" 54 = Wagon 118" 52 = Wagon 140" 51 = Wagon 118" 12 = Van 140" 11 = Van 118" 06 = Front Section 158" 14 = Van 118" 15 = Van 140" 16 = Van 158" 56 = Wagon 158" 01 = Chassis Forward Control 118" 02 = Chassis Forward Control 140"	EX8 = Engine-2.7L I5 Mercedes Turbo Diesel	DGJ = Transmission-5-Spd. Automatic,W5A580

AR = use ase required - = Non illustrrated part

Front Right Side Sliding Glass
Figure SVA-720

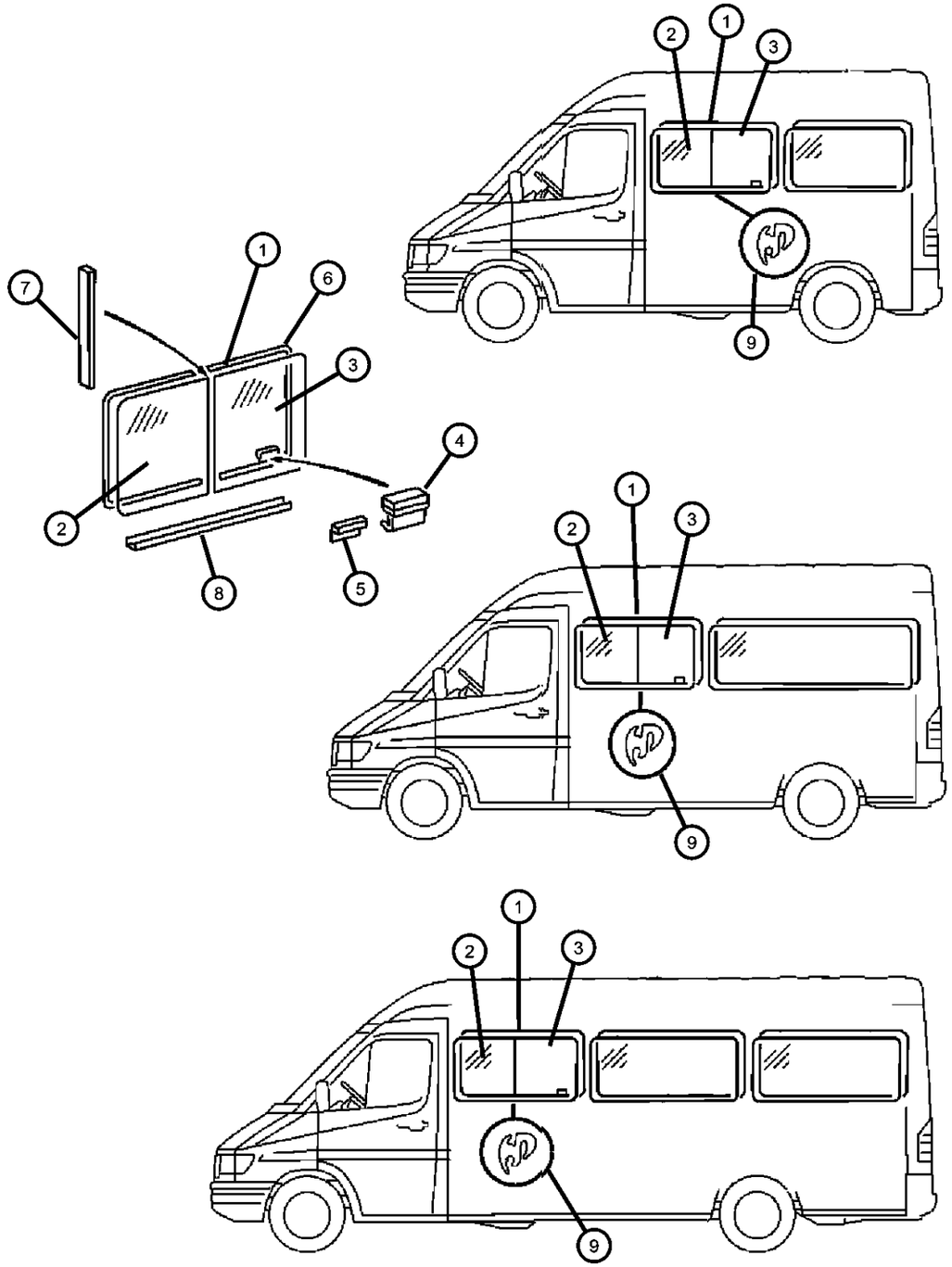

ITEM	PART NUMBER	QTY	LINE	SERIES	BODY	ENGINE	TRANS	TRIM	DESCRIPTION
		2	3, 7		12, 15, 16				
7									WEATHERSTRIP, Side Panel Vent
	05133536AA	1	2, 6		11, 12, 14, 15, 16				
		1	2, 6		51, 52, 54, 55, 56				
		1	3, 7		12, 15, 16				
8									WEATHERSTRIP, Glass
	05134059AA	2	2, 6		11, 12, 14, 15, 16				
		2	2, 6		56, 51, 52, 54, 55				
		2	3, 7		12, 15, 16				
9									SEAL, Window Opening
	05104246AA	1	2, 6		11, 12, 14, 15, 16				
		1	2, 6		51, 52, 54, 55, 56				
		1	3, 7		12, 15, 16				

SPRINTER (VA)

SERIES	LINE	BODY	ENGINE	TRANSMISSION
L = LOWLINE	3 = HD DODGE 2WD 6 = Lt. Duty DODGE 4WD 2 = Med. Duty DODGE 2WD 7 = Med. Duty DODGE 4WD	55 = Wagon 140" 54 = Wagon 118" 52 = Wagon 140" 51 = Wagon 118" 12 = Van 140" 11 = Van 118" 06 = Front Section 158" 14 = Van 118" 15 = Van 140" 16 = Van 158" 56 = Wagon 158" 01 = Chassis Forward Control 118" 02 = Chassis Forward Control 140"	EX8 = Engine-2.7L I5 Mercedes Turbo Diesel	DGJ = Transmission-5-Spd. Automatic,W5A580

AR = use ase required - = Non illustrrated part

Side Glass, Fixed
Figure SVA-730

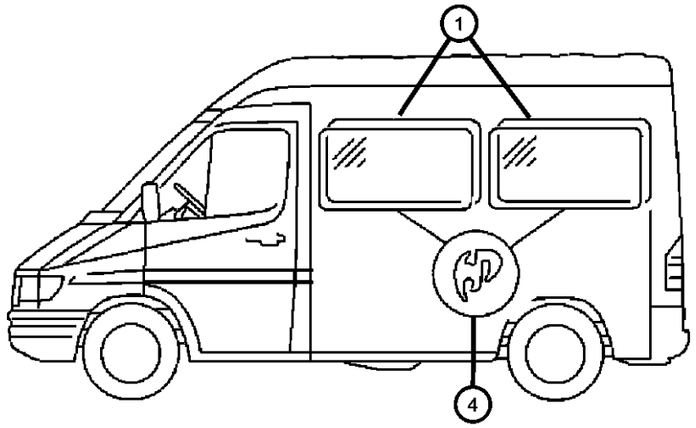

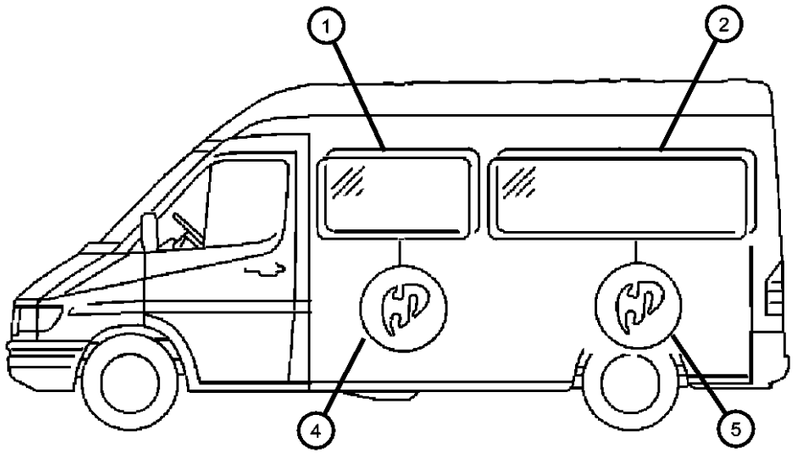

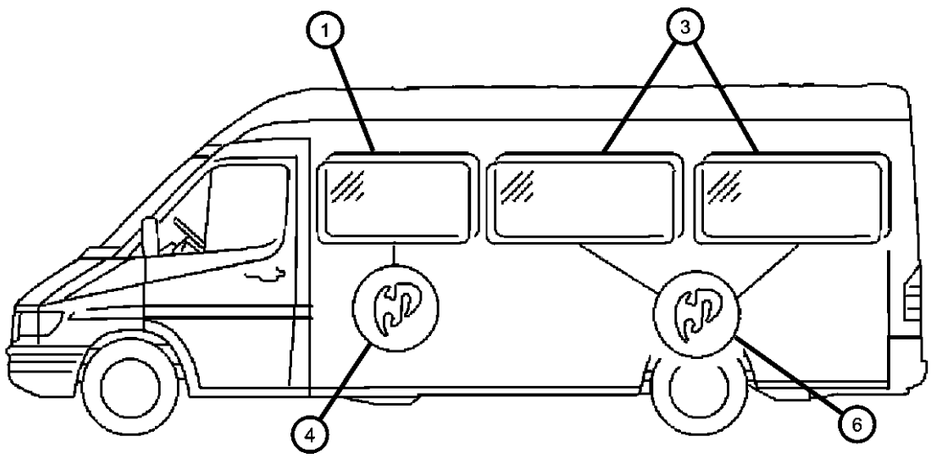

ITEM	PART NUMBER	QTY	LINE	SERIES	BODY	ENGINE	TRANS	TRIM	DESCRIPTION
1									GLASS, Bodyside Window
	05104245AA	1	2, 6		11, 12, 14, 15, 16				Privacy
		1	2, 6		51, 52, 54, 55, 56				Privacy
		1	3, 7		12, 15, 16				Privacy
2									GLASS, Bodyside Window
	05122350AA	1	2, 6		12, 15				Tint
		1	2, 6		52, 55				Tint
		1	3, 7		12, 15				Tint
	05134334AA	1	2, 6		52, 55				Privacy
		1	2, 6		12, 15				Privacy
		1	3, 7		12, 15				Privacy
3									GLASS, Bodyside Window
	05104247AA	1	2, 6		16				Tint
		1	2, 6		56				Tint
		1	3, 7		16				Tint
	05134335AA	1	2, 6		56				Privacy
		1	2, 6		16				Privacy
		1	3, 7		16				Privacy
4									SEAL, Window Opening
	05104246AA	1	2, 6		11, 12, 14, 15, 16				
		1	2, 6		55, 56, 51, 52, 54				
		1	3, 7		12, 15, 16				
5									SEAL, Window Opening
	05104248AA	1	2, 6		12, 15				
		1	2, 6		52, 55				
		1	3, 7		12, 15				
6									SEAL, Window Opening

SPRINTER (VA)

SERIES	LINE	BODY	ENGINE	TRANSMISSION
L = LOWLINE	3 = HD DODGE 2WD 6 = Lt. Duty DODGE 4WD 2 = Med. Duty DODGE 2WD 7 = Med. Duty DODGE 4WD	55 = Wagon 140" 54 = Wagon 118" 52 = Wagon 140" 51 = Wagon 118" 12 = Van 140" 11 = Van 118" 06 = Front Section 158" 14 = Van 118" 15 = Van 140" 16 = Van 158" 56 = Wagon 158" 01 = Chassis Forward Control 118" 02 = Chassis Forward Control 140"	EX8 = Engine-2.7L I5 Mercedes Turbo Diesel	DGJ = Transmission-5-Spd. Automatic,W5A580

Side Glass, Fixed
Figure SVA-730

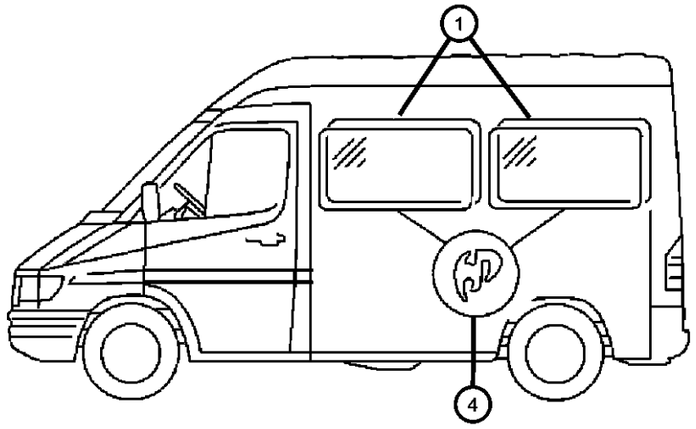

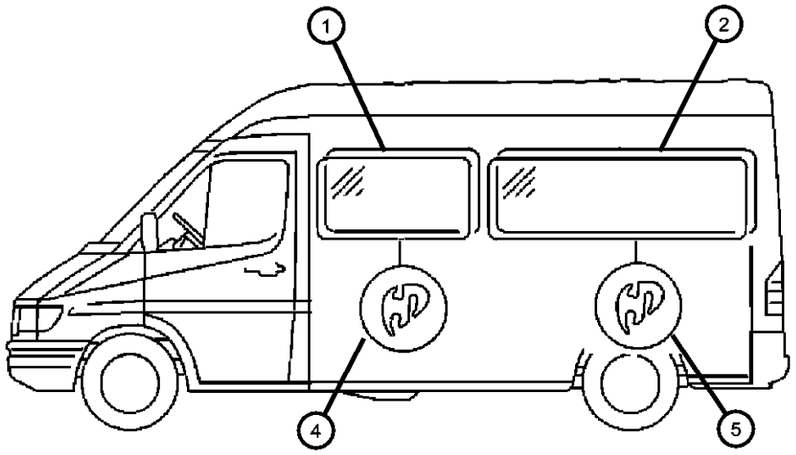

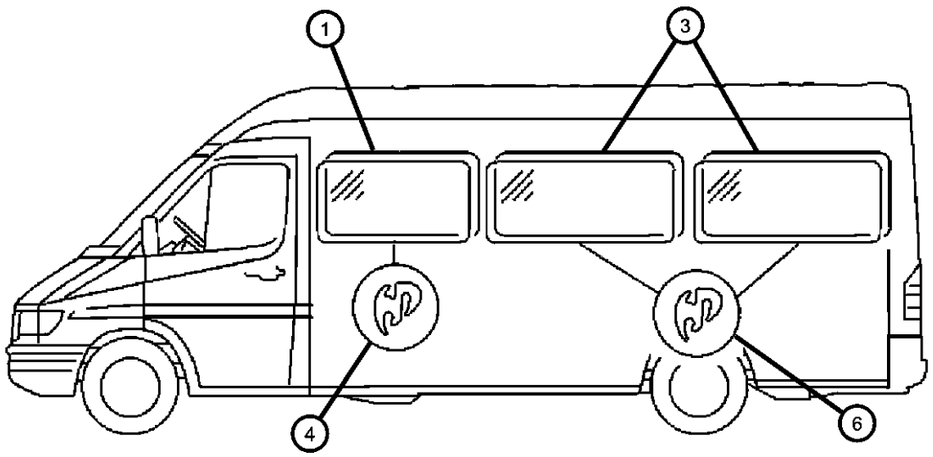

ITEM	PART NUMBER	QTY	LINE	SERIES	BODY	ENGINE	TRANS	TRIM	DESCRIPTION
	05122354AA	1	2, 6		16				
		1	2, 6		56				
		1	3, 7		16				

SPRINTER (VA)

SERIES	LINE	BODY	ENGINE	TRANSMISSION
L = LOWLINE	3 = HD DODGE 2WD 6 = Lt. Duty DODGE 4WD 2 = Med. Duty DODGE 2WD 7 = Med. Duty DODGE 4WD	55 = Wagon 140" 54 = Wagon 118" 52 = Wagon 140" 51 = Wagon 118" 12 = Van 140" 11 = Van 118" 06 = Front Section 158" 14 = Van 118" 15 = Van 140" 16 = Van 158" 56 = Wagon 158" 01 = Chassis Forward Control 118" 02 = Chassis Forward Control 140"	EX8 = Engine-2.7L I5 Mercedes Turbo Diesel	DGJ = Transmission-5-Spd. Automatic,W5A580

Front Aperture, Inner, Left
Figure SVA-810

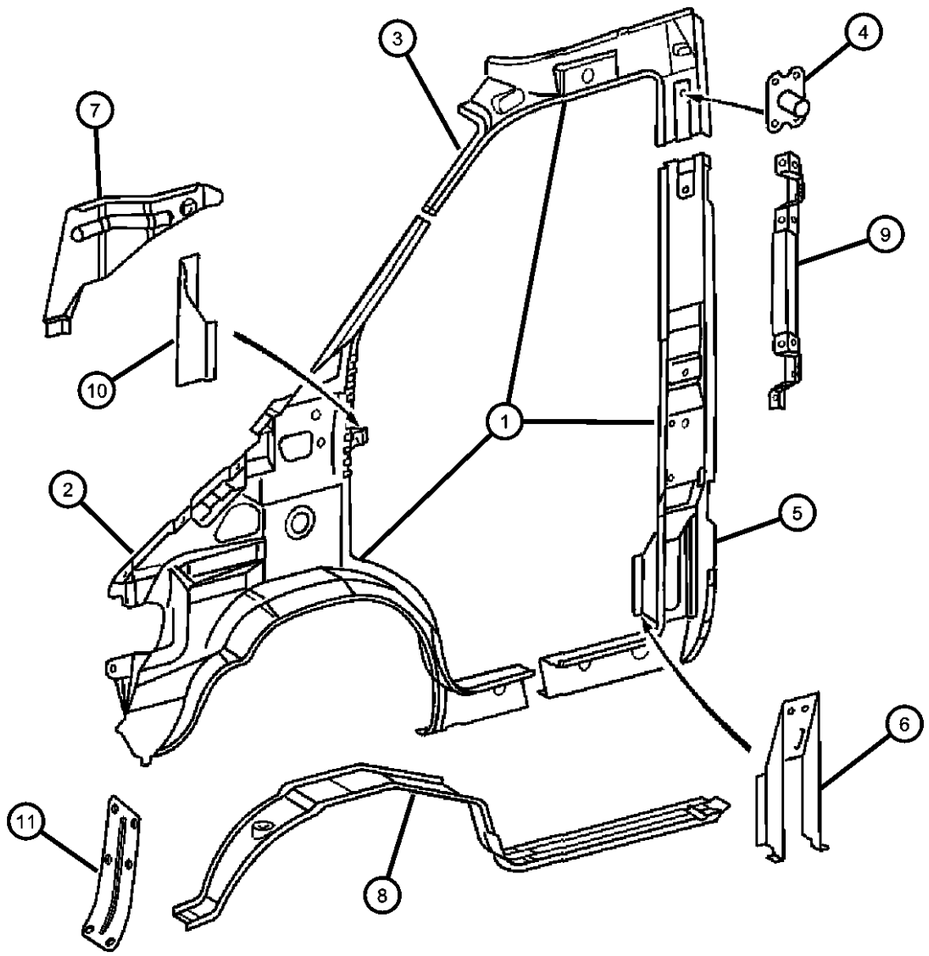

ITEM	PART NUMBER	QTY	LINE	SERIES	BODY	ENGINE	TRANS	TRIM	DESCRIPTION
1									APERTURE, Body Side Door
	05121784AA	1	2, 6		11, 12, 14, 15, 16				Without Left Sliding Door
		1	2, 6		51, 52, 54, 55, 56				Without Left Sliding Door
		1	3, 7		12, 15, 16				Without Left Sliding Door
	05121786AA	1	2, 6		11, 12, 14, 15, 16				With Left Sliding Door
		1	2, 6		51, 52, 54, 55, 56				With Left Sliding Door
		1	3, 7		12, 15, 16				With Left Sliding Door
2									PANEL, Body Side Aperture
	05104184AA	1	2, 6		11, 12, 14, 15, 16				
		1	2, 6		51, 52, 54, 55, 56				
		1	3, 7		12, 15, 16				
3									PANEL, Body Side Aperture
	05121647AA	1	2, 6		11, 12, 14, 15, 16				Without Left Sliding Door
		1	2, 6		51, 52, 54, 55, 56				Without Left Sliding Door
		1	3, 7		12, 15, 16				Without Left Sliding Door
	05121649AA	1	2, 6		11, 12, 14, 15, 16				With Left Sliding Door
		1	2, 6		51, 52, 54, 55, 56				With Left Sliding Door
		1	3, 7		12, 15, 16				With Left Sliding Door
4									TAPPING PLATE, Side Panel
	05125412AA	1	2, 6		11, 12, 14, 15, 16				
		1	2, 6		51, 52, 54, 55, 56				
		1	3, 7		12, 15, 16				
5									PILLAR, Front Door Lock

SPRINTER (VA)

SERIES	LINE	BODY	ENGINE	TRANSMISSION
L = LOWLINE	3 = HD DODGE 2WD 6 = Lt. Duty DODGE 4WD 2 = Med. Duty DODGE 2WD 7 = Med. Duty DODGE 4WD	55 = Wagon 140" 54 = Wagon 118" 52 = Wagon 140" 51 = Wagon 118" 12 = Van 140" 11 = Van 118" 06 = Front Section 158" 14 = Van 118" 15 = Van 140" 16 = Van 158" 56 = Wagon 158" 01 = Chassis Forward Control 118" 02 = Chassis Forward Control 140"	EX8 = Engine-2.7L I5 Mercedes Turbo Diesel	DGJ = Transmission-5-Spd. Automatic,W5A580

Front Aperture, Inner, Left
Figure SVA-810

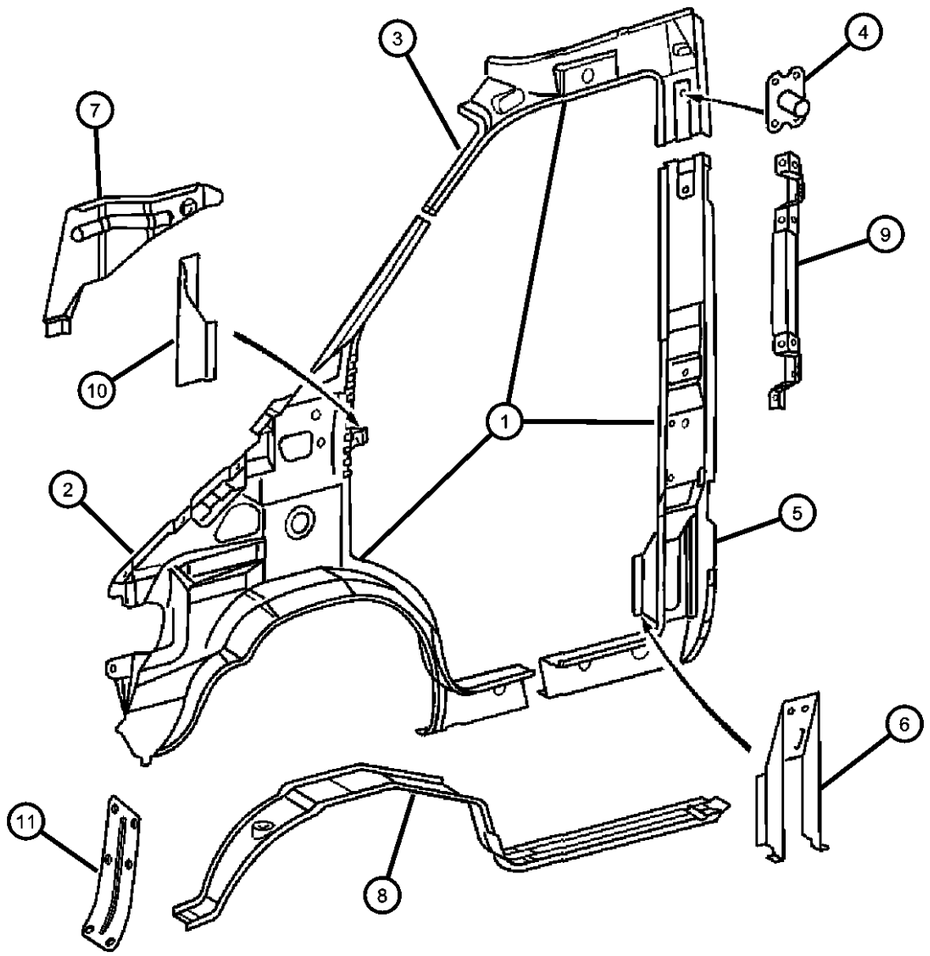

ITEM	PART NUMBER	QTY	LINE	SERIES	BODY	ENGINE	TRANS	TRIM	DESCRIPTION
	05104186AA	1	3, 7		12, 15, 16				Without Left Sliding Door
	05121668AA	1	3, 7		12, 15, 16				With Left Sliding Door
6									REINFORCEMENT, Center Pillar
	05104189AA	1	2, 6		11, 12, 14, 15, 16				
		1	3, 7		12, 15, 16				
		1	2, 6		51, 52, 54, 55, 56				
7	05104193AA	1	3, 7		12, 15, 16				BRACKET, Body Side Aperture
8									WHEELHOUSE, Front Inner
	05104199AA	1	2, 6		11, 12, 14, 15, 16				
		1	2, 6		51, 52, 54, 55, 56				
		1	3, 7		12, 15, 16				
9									BRACKET, Grab Handle
	05121721AA	1	2, 6		11, 12, 14, 15, 16				
		1	2, 6		51, 52, 54, 55, 56				
		1	3, 7		12, 15, 16				
10									REINFORCEMENT, Pillar And Cowl
	05133552AA	1	2, 6		11, 12, 14, 15, 16				
		1	2, 6		51, 52, 54, 55, 56				
		1	3, 7		12, 15, 16				
11									PANEL, Access
	05129943AA	1	2, 6		01, 02, 06				
		1	2, 6		11, 12, 14, 15, 16				
		1	2, 6		51, 52, 54, 55, 56				

SPRINTER (VA)

SERIES	LINE	BODY	ENGINE	TRANSMISSION
L = LOWLINE	3 = HD DODGE 2WD 6 = Lt. Duty DODGE 4WD 2 = Med. Duty DODGE 2WD 7 = Med. Duty DODGE 4WD	55 = Wagon 140" 54 = Wagon 118" 52 = Wagon 140" 51 = Wagon 118" 12 = Van 140" 11 = Van 118" 06 = Front Section 158" 14 = Van 118" 15 = Van 140" 16 = Van 158" 56 = Wagon 158" 01 = Chassis Forward Control 118" 02 = Chassis Forward Control 140"	EX8 = Engine-2.7L I5 Mercedes Turbo Diesel	DGJ = Transmission-5-Spd. Automatic,W5A580

Front Aperture, Outer, Left
Figure SVA-820

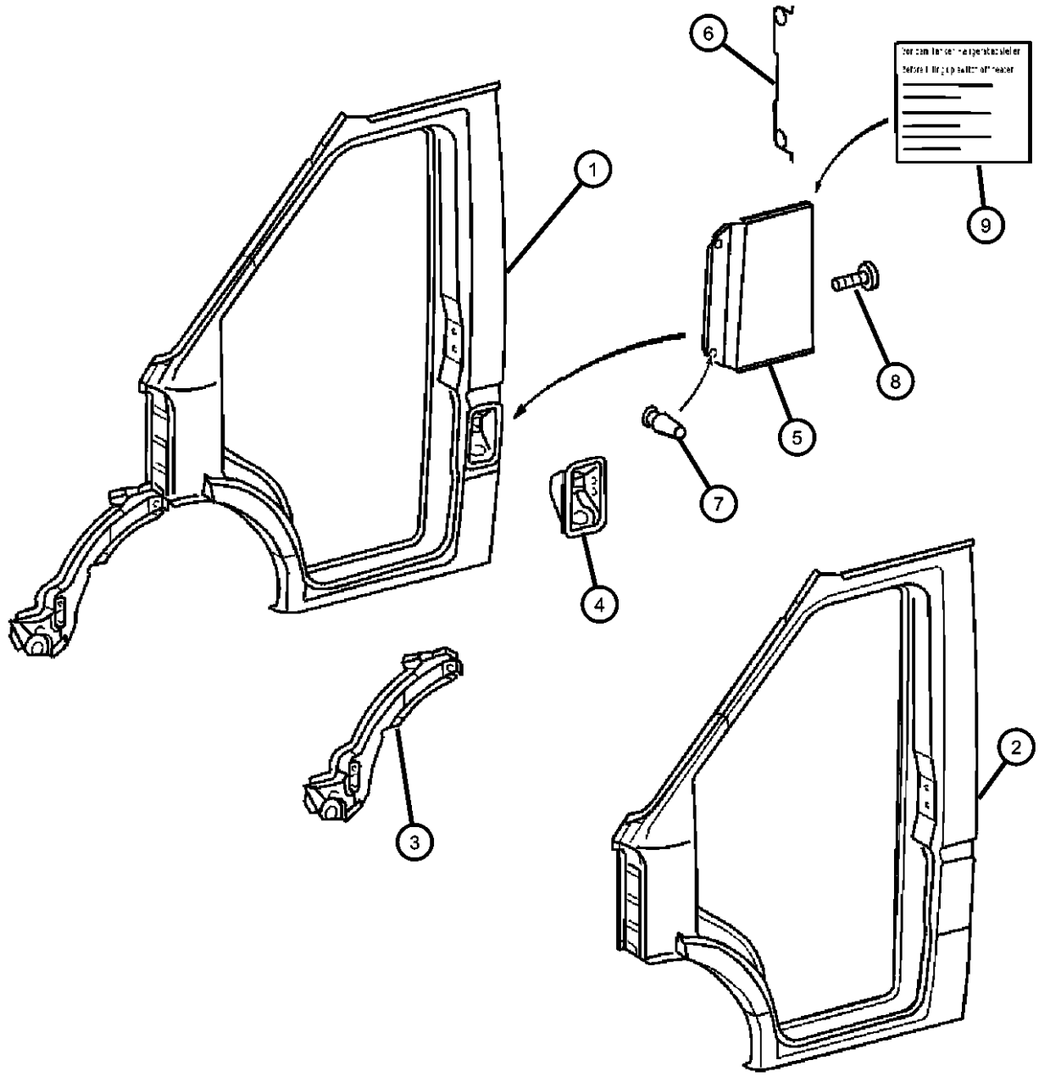

ITEM	PART NUMBER	QTY	LINE	SERIES	BODY	ENGINE	TRANS	TRIM	DESCRIPTION
1									APERTURE, Body Side Door, Complete
	05104182AA	1	2, 6		11, 12, 14, 15, 16				
		1	2, 6		51, 52, 54, 55, 56				
		1	3, 7		12, 15, 16				
2									APERTURE, Body Side Door, Skin Only, With No Full Door Cutout
	05104220AA	1	2, 6		11, 12, 14, 15, 16				
		1	2, 6		51, 52, 54, 55, 56				
		1	3, 7		12, 15, 16				
3	05104192AA	1	3, 7		12, 15, 16				PANEL, Fender Extentsion
4									HOUSING, Fuel Filler
	05104167AA	1	3, 7		12, 15, 16				
		1	2, 6		11, 12, 14, 15, 16				
		1	2, 6		51, 52, 54, 55, 56				
5									DOOR, Fuel Fill
	05104399AA	1	2, 6		11, 12, 14, 15, 16				
		1	2, 6		51, 52, 54, 55, 56				
		1	3, 7		12, 15, 16				
6									SPRING, Fuel Filler Door
	05104408AA	1	3, 7		12, 15, 16				
		1	2, 6		11, 12, 14, 15, 16				
		1	2, 6		51, 52, 54, 55, 56				
7									BUMPER, Fuel Door
	05103917AA	1	3, 7		12, 15, 16				

SPRINTER (VA)

SERIES	LINE	BODY	ENGINE	TRANSMISSION
L = LOWLINE	3 = HD DODGE 2WD 6 = Lt. Duty DODGE 4WD 2 = Med. Duty DODGE 2WD 7 = Med. Duty DODGE 4WD	55 = Wagon 140" 54 = Wagon 118" 52 = Wagon 140" 51 = Wagon 118" 12 = Van 140" 11 = Van 118" 06 = Front Section 158" 14 = Van 118" 15 = Van 140" 16 = Van 158" 56 = Wagon 158" 01 = Chassis Forward Control 118" 02 = Chassis Forward Control 140"	EX8 = Engine-2.7L I5 Mercedes Turbo Diesel	DGJ = Transmission-5-Spd. Automatic,W5A580

Front Aperture, Outer, Left
Figure SVA-820

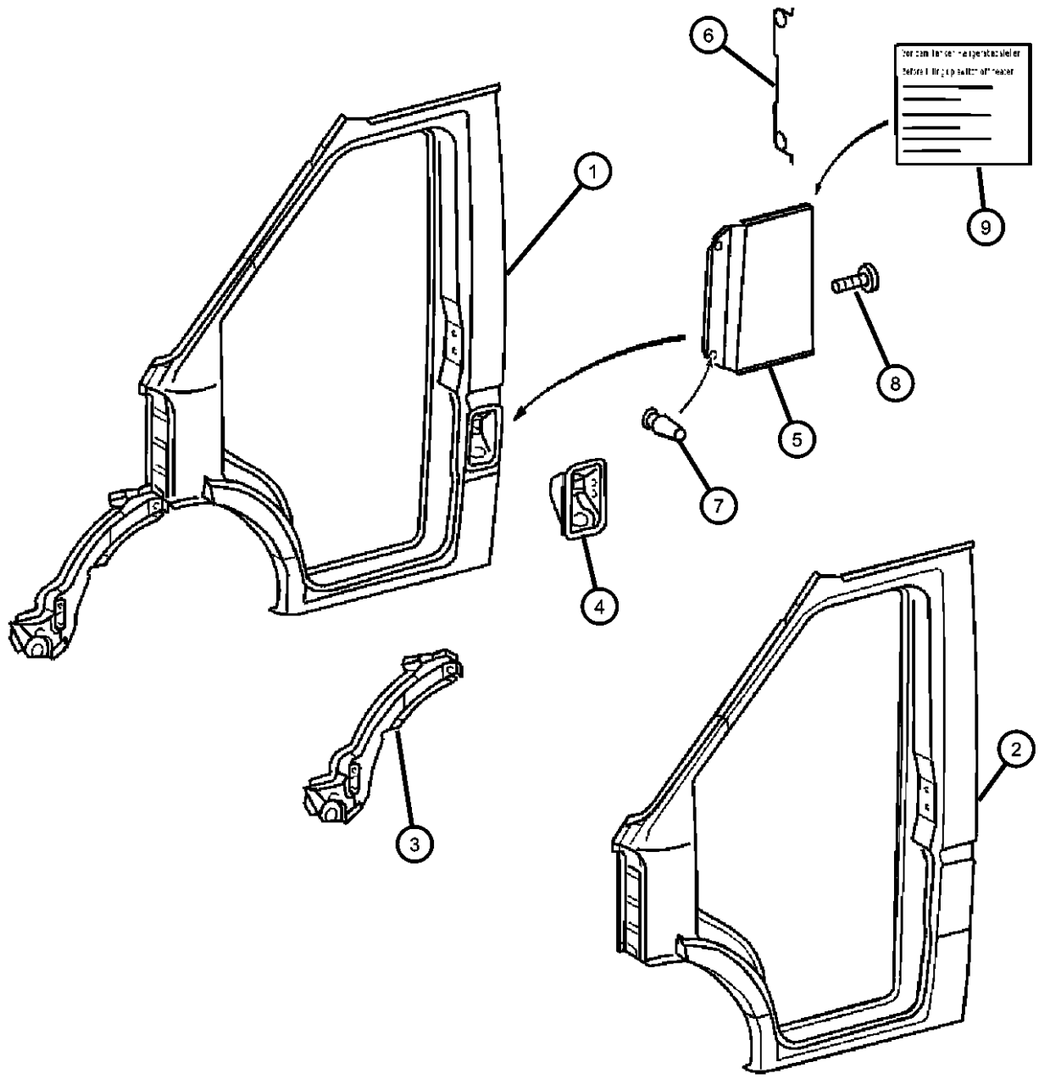

ITEM	PART NUMBER	QTY	LINE	SERIES	BODY	ENGINE	TRANS	TRIM	DESCRIPTION
		2	2, 6		11, 12, 14, 15, 16				
		2	2, 6		51, 52, 54, 55, 56				
8									SCREW
	05103714AA	2	2, 6		11, 12, 14, 15, 16				
		2	2, 6		51, 52, 54, 55, 56				
		1	3, 7		12, 15, 16				
9									LABEL, Fuel
	05104152AA	1	2, 6		11, 12, 14, 15, 16				
		1	2, 6		51, 52, 54, 55, 56				
		1	3, 7		12, 15, 16				

SPRINTER (VA)

SERIES	LINE	BODY	ENGINE	TRANSMISSION
L = LOWLINE	3 = HD DODGE 2WD 6 = Lt. Duty DODGE 4WD 2 = Med. Duty DODGE 2WD 7 = Med. Duty DODGE 4WD	55 = Wagon 140" 54 = Wagon 118" 52 = Wagon 140" 51 = Wagon 118" 12 = Van 140" 11 = Van 118" 06 = Front Section 158" 14 = Van 118" 15 = Van 140" 16 = Van 158" 56 = Wagon 158" 01 = Chassis Forward Control 118" 02 = Chassis Forward Control 140"	EX8 = Engine-2.7L I5 Mercedes Turbo Diesel	DGJ = Transmission-5-Spd. Automatic,W5A580

Front Aperture, Inner, Right
Figure SVA-830

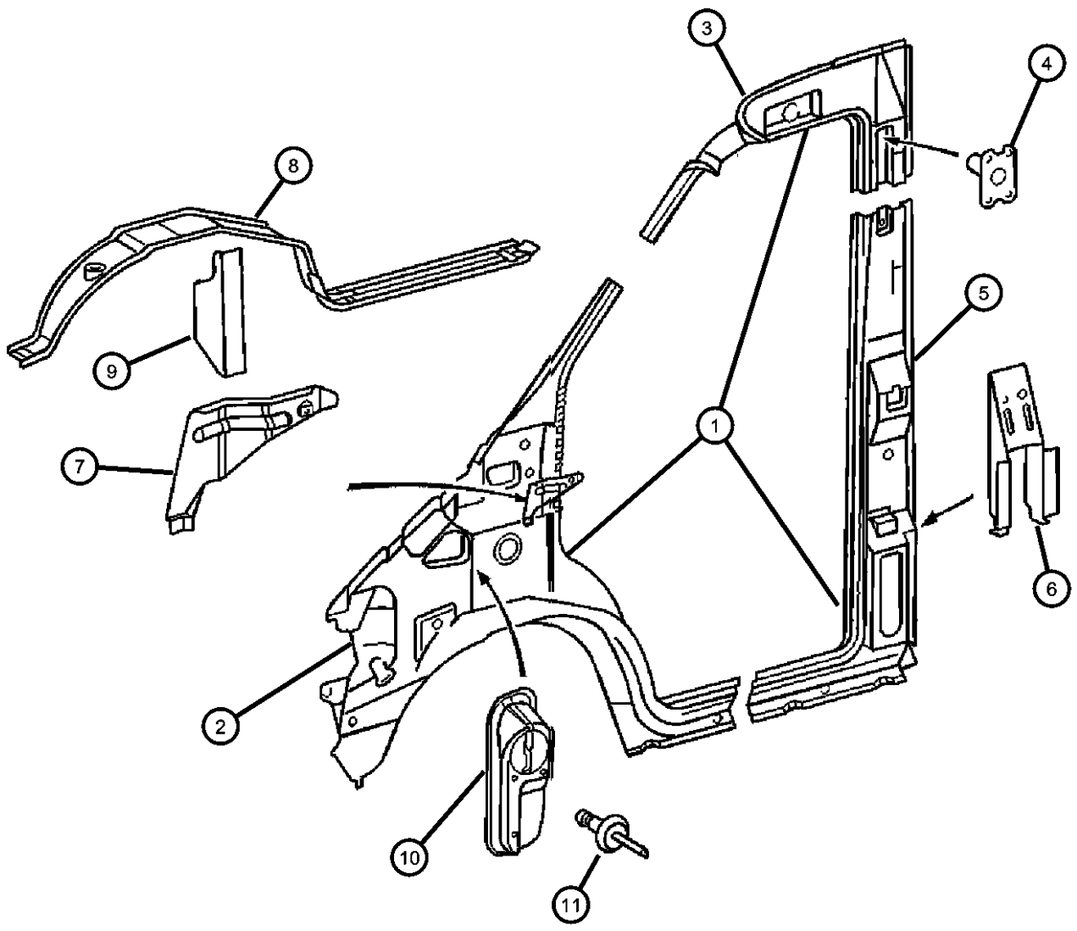

ITEM	PART NUMBER	QTY	LINE	SERIES	BODY	ENGINE	TRANS	TRIM	DESCRIPTION
1									APERTURE, Body Side Door
	05104183AA	1	2, 6		11, 12, 14, 15, 16				With Sliding Door
		1	2, 6		51, 52, 54, 55, 56				With Sliding Door
		1	3, 7		12, 15, 16				With Sliding Door
	05121659AA	1	2, 6		11, 12, 14, 15, 16				Without Sliding Door
		1	2, 6		51, 52, 54, 55, 56				Without Sliding Door
		1	3, 7		12, 15, 16				Without Sliding Door
2									PANEL, Body Side Aperture
	05104185AA	1	2, 6		11, 12, 14, 15, 16				
		1	2, 6		51, 52, 54, 55, 56				
		1	3, 7		12, 15, 16				
3									PANEL, Body Side Aperture
	05121648AA	1	2, 6		11, 12, 14, 15, 16				Without Sliding Door
		1	2, 6		51, 52, 54, 55, 56				Without Sliding Door
		1	3, 7		12, 15, 16				Without Sliding Door
	05121650AA	1	2, 6		11, 12, 14, 15, 16				With Sliding Door
		1	2, 6		51, 52, 54, 55, 56				With Sliding Door
		1	3, 7		12, 15, 16				With Sliding Door
4									TAPPING PLATE, Side Panel
	05125412AA	1	2, 6		11, 12, 14, 15, 16				
		1	2, 6		51, 52, 54, 55, 56				
		1	3, 7		12, 15, 16				
5									PANEL, Body Side Aperture

SPRINTER (VA)

SERIES	LINE	BODY	ENGINE	TRANSMISSION
L = LOWLINE	3 = HD DODGE 2WD 6 = Lt. Duty DODGE 4WD 2 = Med. Duty DODGE 2WD 7 = Med. Duty DODGE 4WD	55 = Wagon 140" 54 = Wagon 118" 52 = Wagon 140" 51 = Wagon 118" 12 = Van 140" 11 = Van 118" 06 = Front Section 158" 14 = Van 118" 15 = Van 140" 16 = Van 158" 56 = Wagon 158" 01 = Chassis Forward Control 118" 02 = Chassis Forward Control 140"	EX8 = Engine-2.7L I5 Mercedes Turbo Diesel	DGJ = Transmission-5-Spd. Automatic,W5A580

Front Aperture, Inner, Right
Figure SVA-830

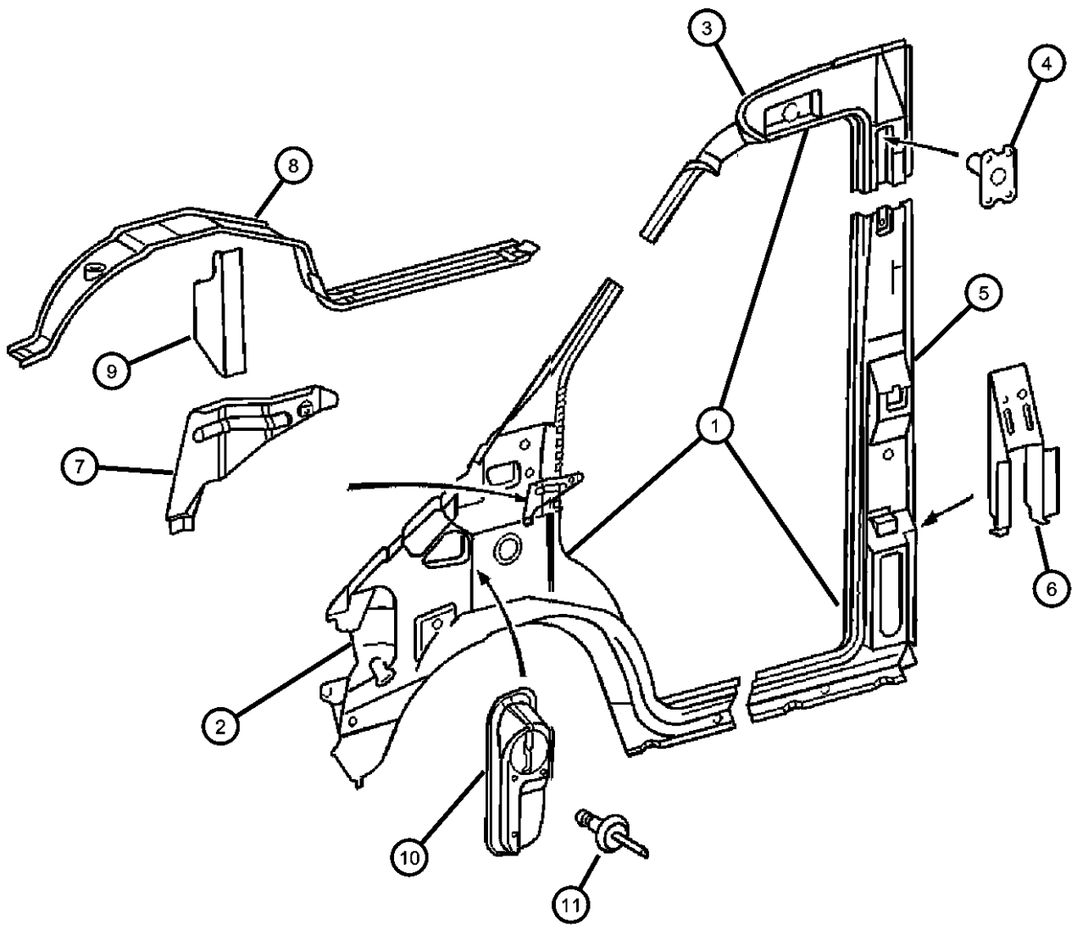

ITEM	PART NUMBER	QTY	LINE	SERIES	BODY	ENGINE	TRANS	TRIM	DESCRIPTION
	05121644AA	1	2, 6		11, 12, 14, 15, 16				Without Sliding Door
		1	2, 6		51, 52, 54, 55, 56				Without Sliding Door
		1	3, 7		12, 15, 16				Without Sliding Door
	05121645AA	1	2, 6		11, 12, 14, 15, 16				With Sliding Door
		1	2, 6		51, 52, 54, 55, 56				With Sliding Door
		1	3, 7		12, 15, 16				With Sliding Door
6									REINFORCEMENT, Center Pillar
	05104189AA	1	2, 6		11, 12, 14, 15, 16				
		1	3, 7		12, 15, 16				
		1	2, 6		51, 52, 54, 55, 56				
7									BRACKET, Instrument Panel
	05104195AA	1	2, 6		11, 12, 14, 15, 16				
		1	2, 6		51, 52, 54, 55, 56				
		1	3, 7		12, 15, 16				
8									WHEELHOUSE, Front Inner
	05104199AA	1	2, 6		11, 12, 14, 15, 16				
	05104200AA	1	2, 6		51, 52, 54, 55, 56				
		1	3, 7		12, 15, 16				
9									REINFORCEMENT, Pillar And Cowl
	05133552AA	1	2, 6		11, 12, 14, 15, 16				
		1	2, 6		51, 52, 54, 55, 56				
		1	3, 7		12, 15, 16				

SPRINTER (VA)

SERIES	LINE	BODY	ENGINE	TRANSMISSION
L = LOWLINE	3 = HD DODGE 2WD 6 = Lt. Duty DODGE 4WD 2 = Med. Duty DODGE 2WD 7 = Med. Duty DODGE 4WD	55 = Wagon 140" 54 = Wagon 118" 52 = Wagon 140" 51 = Wagon 118" 12 = Van 140" 11 = Van 118" 06 = Front Section 158" 14 = Van 118" 15 = Van 140" 16 = Van 158" 56 = Wagon 158" 01 = Chassis Forward Control 118" 02 = Chassis Forward Control 140"	EX8 = Engine-2.7L I5 Mercedes Turbo Diesel	DGJ = Transmission-5-Spd. Automatic,W5A580

Front Aperture, Inner, Right
Figure SVA-830

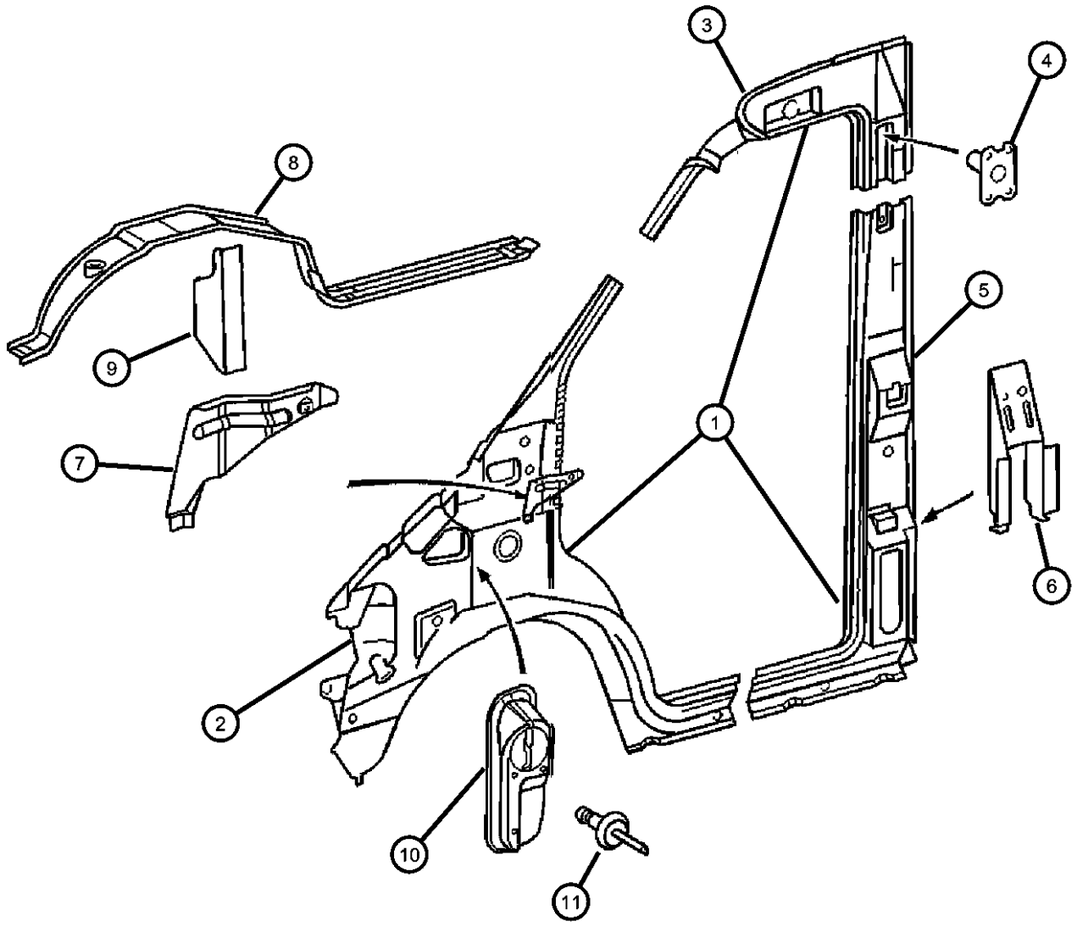

ITEM	PART NUMBER	QTY	LINE	SERIES	BODY	ENGINE	TRANS	TRIM	DESCRIPTION
10									BUSHING, Door Aperture
	05104187AA	1	2, 6		11, 12, 14, 15, 16				
		1	2, 6		51, 52, 54, 55, 56				
		1	3, 7		12, 15, 16				
11									RIVET
	05133554AA	3	2, 6		11, 12, 14, 15, 16				
		3	2, 6		51, 52, 54, 55, 56				
		3	3, 7		12, 15, 16				
12									COVER
	05122859AA	1	2, 6		01, 02, 06				
		1	2, 6		11, 12, 14, 15, 16				
		1	2, 6		51, 52, 54, 55, 56				
		1	3, 7		02, 06				
		1	3, 7		12, 15, 16				

SPRINTER (VA)

SERIES	LINE	BODY	ENGINE	TRANSMISSION
L = LOWLINE	3 = HD DODGE 2WD 6 = Lt. Duty DODGE 4WD 2 = Med. Duty DODGE 2WD 7 = Med. Duty DODGE 4WD	55 = Wagon 140" 54 = Wagon 118" 52 = Wagon 140" 51 = Wagon 118" 12 = Van 140" 11 = Van 118" 06 = Front Section 158" 14 = Van 118" 15 = Van 140" 16 = Van 158" 56 = Wagon 158" 01 = Chassis Forward Control 118" 02 = Chassis Forward Control 140"	EX8 = Engine-2.7L I5 Mercedes Turbo Diesel	DGJ = Transmission-5-Spd. Automatic,W5A580

AR = use ase required - = Non illustrrated part

Front Aperture, Outer, Right
Figure SVA-840

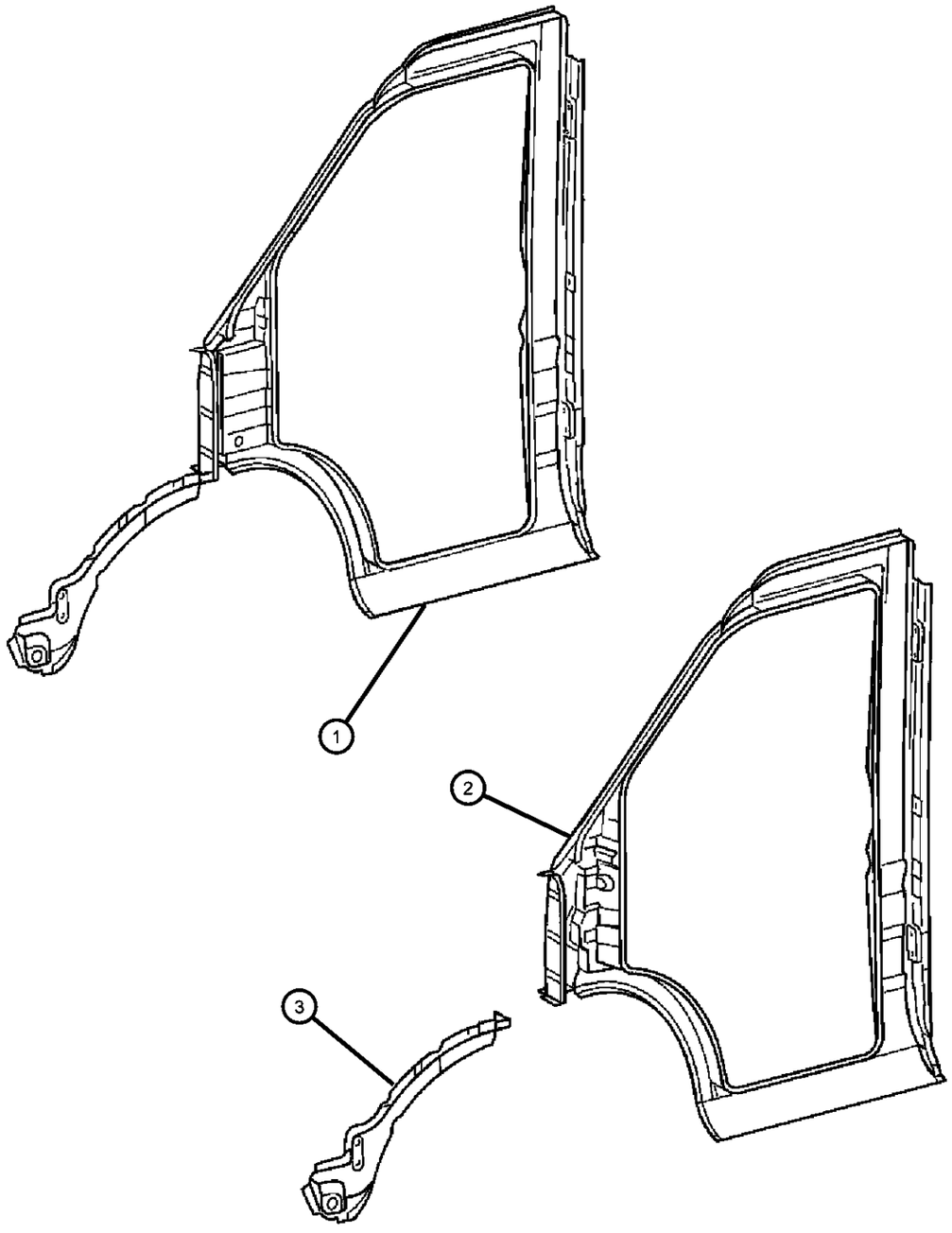

ITEM	PART NUMBER	QTY	LINE	SERIES	BODY	ENGINE	TRANS	TRIM	DESCRIPTION
1									APERTURE, Body Side Door
	05121683AA	1	2, 6		11, 12, 14, 15, 16				
		1	2, 6		51, 52, 54, 55, 56				
		1	3, 7		12, 15, 16				
2									APERTURE, Body Side Door
	05104221AA	1	2, 6		11, 12, 14, 15, 16				
		1	2, 6		51, 52, 54, 55, 56				
		1	3, 7		12, 15, 16				
3	05104190AA	1	3, 7		12, 15, 16				PANEL, Fender Extentsion

SPRINTER (VA)

SERIES	LINE	BODY	ENGINE	TRANSMISSION
L = LOWLINE	3 = HD DODGE 2WD 6 = Lt. Duty DODGE 4WD 2 = Med. Duty DODGE 2WD 7 = Med. Duty DODGE 4WD	55 = Wagon 140" 54 = Wagon 118" 52 = Wagon 140" 51 = Wagon 118" 12 = Van 140" 11 = Van 118" 06 = Front Section 158" 14 = Van 118" 15 = Van 140" 16 = Van 158" 56 = Wagon 158" 01 = Chassis Forward Control 118" 02 = Chassis Forward Control 140"	EX8 = Engine-2.7L I5 Mercedes Turbo Diesel	DGJ = Transmission-5-Spd. Automatic,W5A580

AR = use ase required - = Non illustrrated part

Right Side Cargo Door Pillars & Wheelhouse
Figure SVA-910

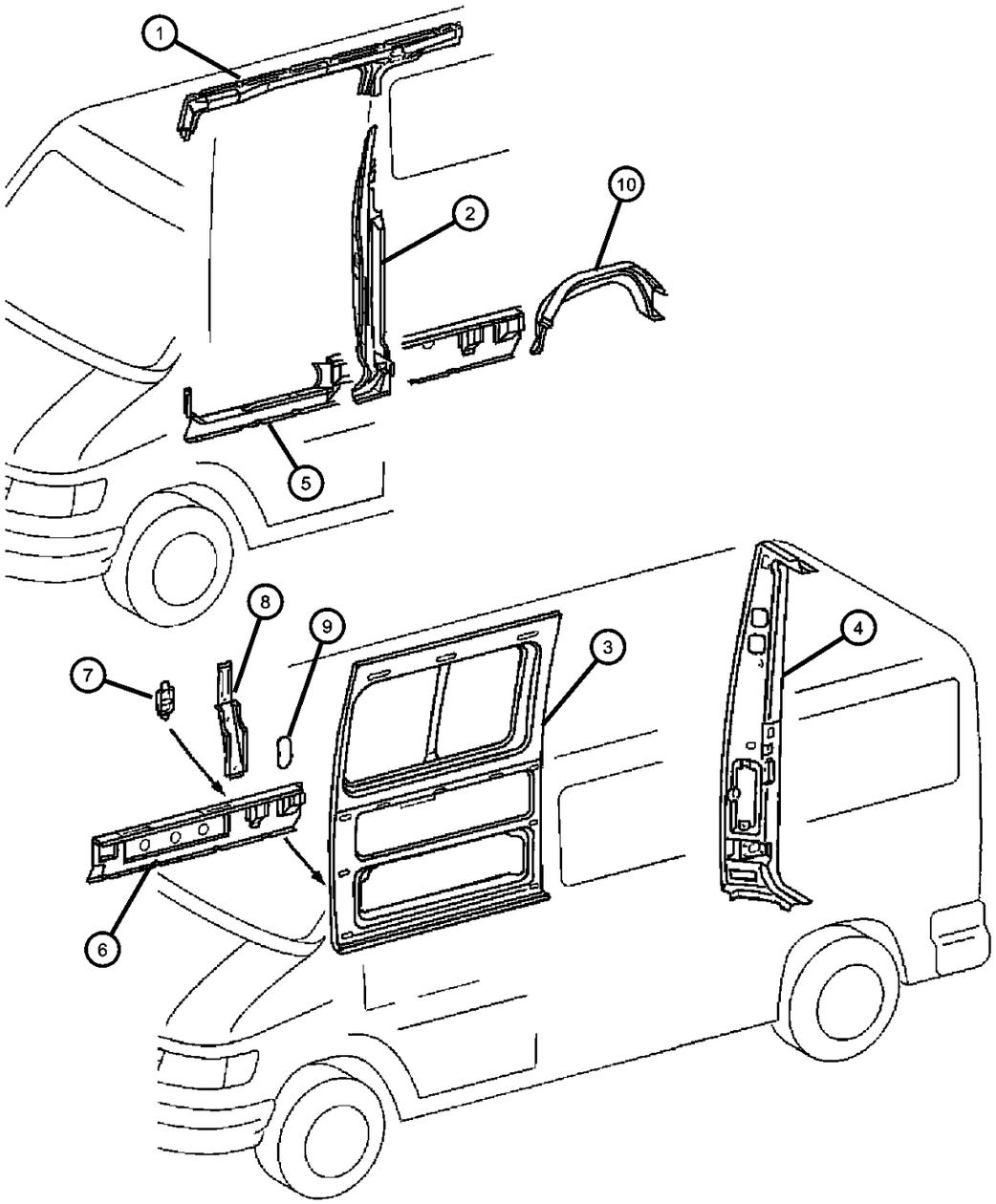

ITEM	PART NUMBER	QTY	LINE	SERIES	BODY	ENGINE	TRANS	TRIM	DESCRIPTION
1									REINFORCEMENT, Body Side Aperture
	05104204AA	1	2, 6		11, 12, 14, 15, 16				
		1	2, 6		51, 52, 54, 55, 56				
		1	3, 7		12, 15, 16				
2									PILLAR, Side Cargo Door
	05104166AA	1	2, 6		11, 12, 14, 15, 16				[140 & 158] Inch Wheelbase
		1	2, 6		51, 52, 54, 55, 56				[140 & 158] Inch Wheelbase
		1	3, 7		12, 15, 16				[140 & 158] Inch Wheelbase
	05121699AA	1	2, 6		11, 14				[118] Inch Wheelbase
		1	2, 6		12, 15, 16				[118] Inch Wheelbase
		1	2, 6		51, 54				[118] Inch Wheelbase
		1	2, 6		55, 56, 52				[118] Inch Wheelbase
		1	3, 7		12, 15, 16				[118] Inch Wheelbase
3									PANEL, Body Side Front
	05104197AA	1	2, 6		11, 12, 14, 15, 16				
		1	2, 6		51, 52, 54, 55, 56				
		1	3, 7		12, 15, 16				
4									PILLAR, Rear Cargo Door Hinge
	05104178AA	1	2, 6		11, 12, 14, 15, 16				High Roof
		1	2, 6		51, 52, 54, 55, 56				High Roof
	05121908AA	1	2, 6		11, 12, 14, 15, 16				Low Roof
		1	2, 6		51, 52, 54, 55, 56				Low Roof
		1	3, 7		12, 15, 16				Low Roof
		1	3, 7		12, 15, 16				High Roof

SPRINTER (VA)

SERIES	LINE	BODY	ENGINE	TRANSMISSION
L = LOWLINE	3 = HD DODGE 2WD 6 = Lt. Duty DODGE 4WD 2 = Med. Duty DODGE 2WD 7 = Med. Duty DODGE 4WD	55 = Wagon 140" 54 = Wagon 118" 52 = Wagon 140" 51 = Wagon 118" 12 = Van 140" 11 = Van 118" 06 = Front Section 158" 14 = Van 118" 15 = Van 140" 16 = Van 158" 56 = Wagon 158" 01 = Chassis Forward Control 118" 02 = Chassis Forward Control 140"	EX8 = Engine-2.7L I5 Mercedes Turbo Diesel	DGJ = Transmission-5-Spd. Automatic,W5A580

Right Side Cargo Door Pillars & Wheelhouse
Figure SVA-910

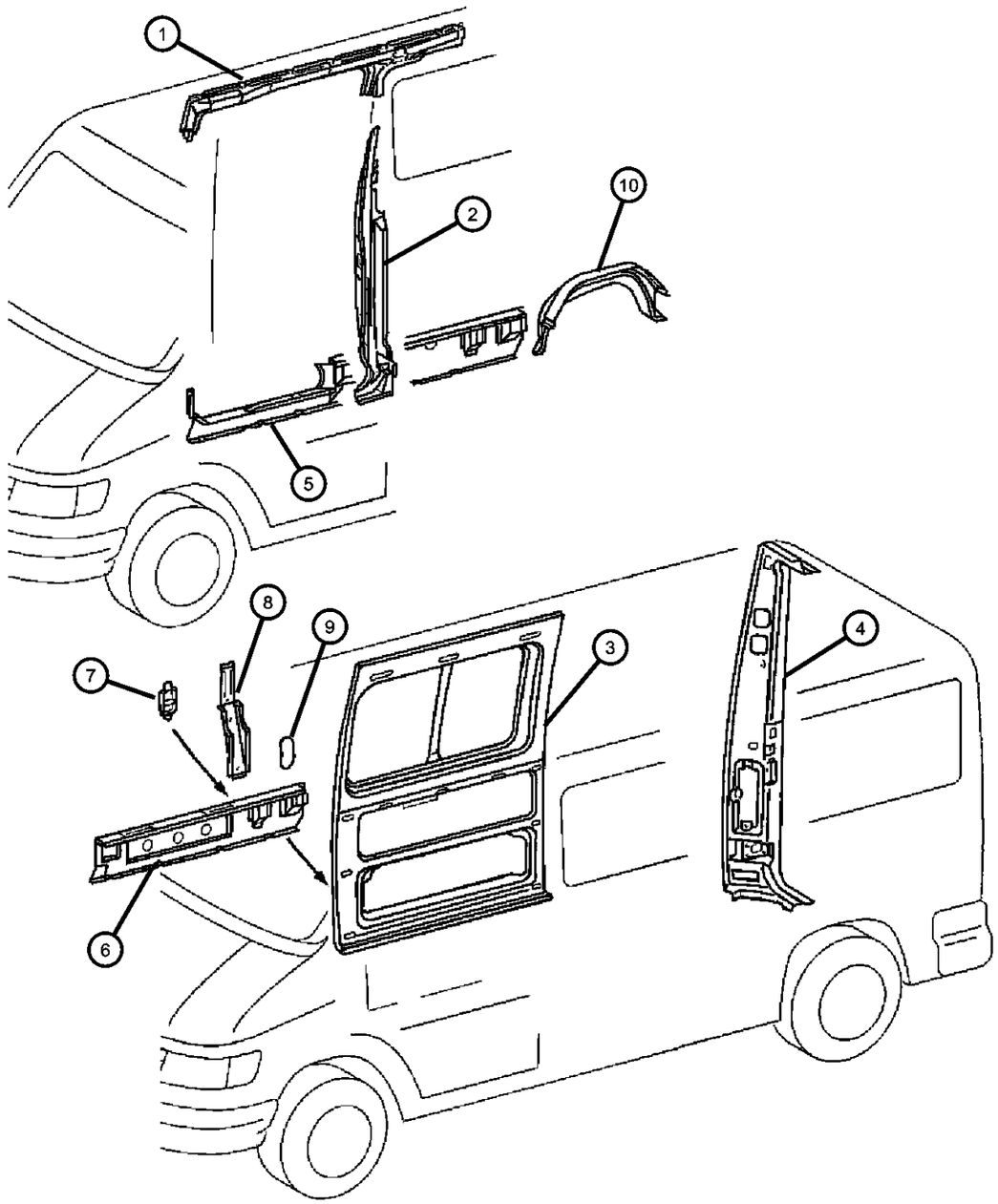

ITEM	PART NUMBER	QTY	LINE	SERIES	BODY	ENGINE	TRANS	TRIM	DESCRIPTION
5									SUPPORT, Sill Reinforcement
	05104171AA	1	2, 6		11, 14				[118] Inch Wheelbase
		1	2, 6		51, 54				[118] Inch Wheelbase
	05121747AA	1	2, 6		16				[158] Inch Wheelbase, Without Right Sliding Door
		1	2, 6		56				[158] Inch Wheelbase, Without Right Sliding Door
		1	3, 7		16				[158] Inch Wheelbase, Without Right Sliding Door
	05121752AA	1	2, 6		12, 15				[140] Inch Wheelbase
		1	2, 6		52, 55				[140] Inch Wheelbase
	05121755AA	1	2, 6		16				[158] Inch Wheelbase, With Right Sliding Door
		1	2, 6		56				[158] Inch Wheelbase, With Right Sliding Door
	05121776AA	1	3, 7		12, 15				[140] Inch Wheelbase
	05121780AA	1	3, 7		16				[158] Inch Wheelbase, With Right Sliding Door
6									SUPPORT, Sill Reinforcement
	05121743AA	1	2, 6		12, 15				[140] Inch Wheelbase, With Right Sliding Door
		1	2, 6		52, 55				[140] Inch Wheelbase, With Right Sliding Door
		1	3, 7		12, 15				[140] Inch Wheelbase, With Right Sliding Door
	05121766AA	1	3, 7		12, 15, 16				[140] Inch Wheelbase, Without Right Sliding Door
	05131075AA	1	2, 6		11, 14				[118] Inch Wheelbase, Without Right Sliding Door
		1	2, 6		51, 54				[118] Inch Wheelbase, Without Right Sliding Door
	05131079AA	1	2, 6		12, 15				[140] Inch Wheelbase, Without Right Sliding Door
		1	2, 6		52, 55				[140] Inch Wheelbase, Without Right Sliding Door

SPRINTER (VA)

SERIES	LINE	BODY	ENGINE	TRANSMISSION
L = LOWLINE	3 = HD DODGE 2WD 6 = Lt. Duty DODGE 4WD 2 = Med. Duty DODGE 2WD 7 = Med. Duty DODGE 4WD	55 = Wagon 140" 54 = Wagon 118" 52 = Wagon 140" 51 = Wagon 118" 12 = Van 140" 11 = Van 118" 06 = Front Section 158" 14 = Van 118" 15 = Van 140" 16 = Van 158" 56 = Wagon 158" 01 = Chassis Forward Control 118" 02 = Chassis Forward Control 140"	EX8 = Engine-2.7L I5 Mercedes Turbo Diesel	DGJ = Transmission-5-Spd. Automatic,W5A580

Right Side Cargo Door Pillars & Wheelhouse
Figure SVA-910

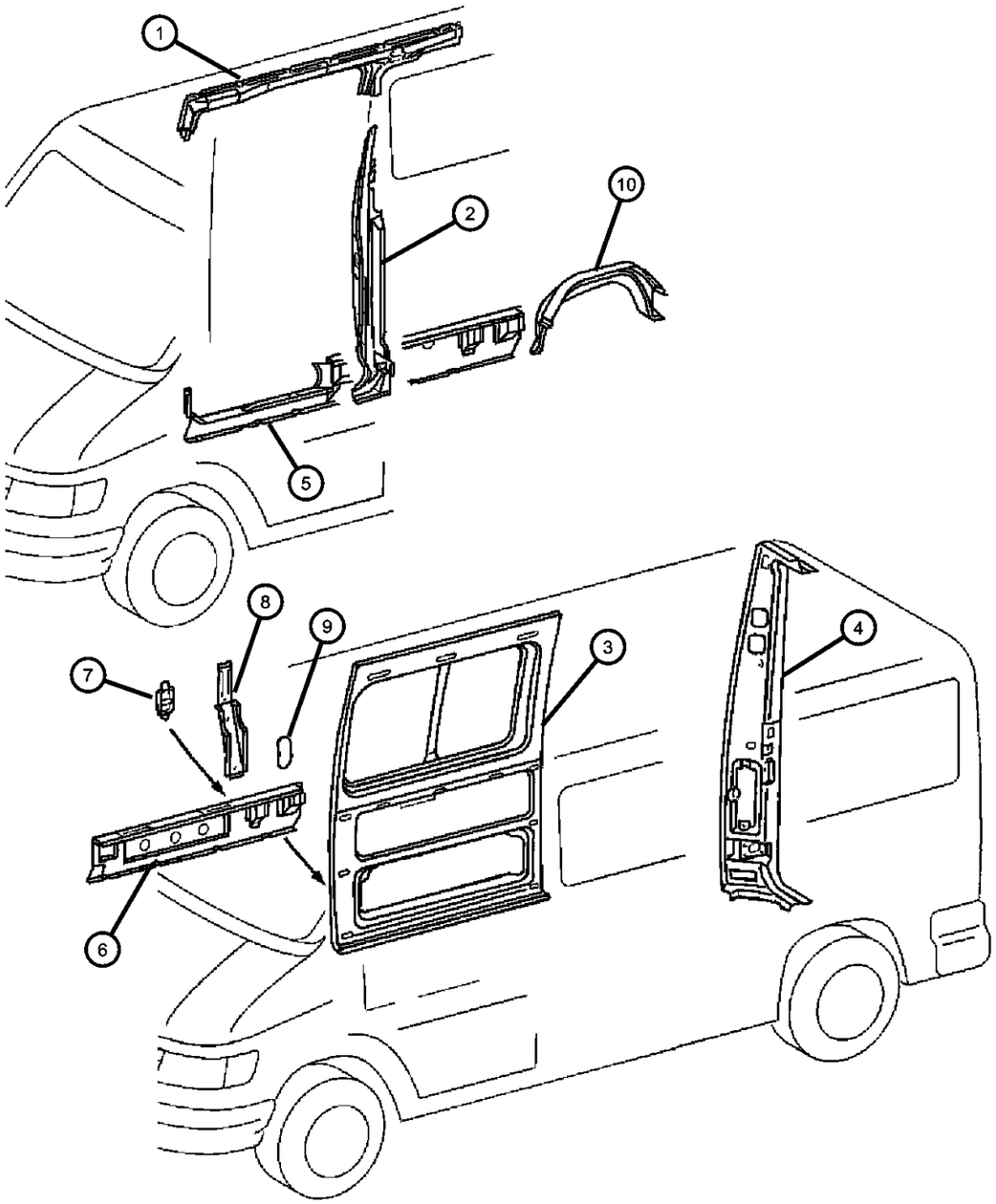

ITEM	PART NUMBER	QTY	LINE	SERIES	BODY	ENGINE	TRANS	TRIM	DESCRIPTION
	05131083AA	1	2, 6		16				[158] Inch Wheelbase, Without Right Sliding Door
		1	2, 6		56				[158] Inch Wheelbase, Without Right Sliding Door
7									PLUG, Body
	05125519AA	2	2, 6		12, 15, 16				
		1	2, 6		11, 14				
		2	2, 6		52, 55, 56				
		1	2, 6		51, 54				
		1	3, 7		12, 15, 16				
8									REINFORCEMENT, Side Panel
	05104198AA	1	2, 6		11, 12, 14, 15, 16				
		1	2, 6		51, 52, 54, 55, 56				
		1	3, 7		12, 15, 16				
9									COVER, Sill
	05121838AA	1	2, 6		15, 16, 11, 12, 14				
		1	2, 6		51, 52, 54, 55, 56				
		1	3, 7		12, 15, 16				
10									WHEELHOUSE
	05121862AA	1	2, 6		11, 12, 14, 15, 16				
		1	2, 6		51, 52, 54, 55, 56				
	05121865AA	1	2, 6		51, 52, 54, 55, 56				With [WDG], 16x6 Steel Wheels
		1	3, 7		12, 15, 16				With [WDG], 16x6 Steel Wheels
		1	2, 6		11, 12, 14, 15, 16				With [WDG], 16x6 Steel Wheels

SPRINTER (VA)

SERIES	LINE	BODY	ENGINE	TRANSMISSION
L = LOWLINE	3 = HD DODGE 2WD 6 = Lt. Duty DODGE 4WD 2 = Med. Duty DODGE 2WD 7 = Med. Duty DODGE 4WD	55 = Wagon 140" 54 = Wagon 118" 52 = Wagon 140" 51 = Wagon 118" 12 = Van 140" 11 = Van 118" 06 = Front Section 158" 14 = Van 118" 15 = Van 140" 16 = Van 158" 56 = Wagon 158" 01 = Chassis Forward Control 118" 02 = Chassis Forward Control 140"	EX8 = Engine-2.7L I5 Mercedes Turbo Diesel	DGJ = Transmission-5-Spd. Automatic,W5A580

Right Side Panels, Cargo
Figure SVA-920

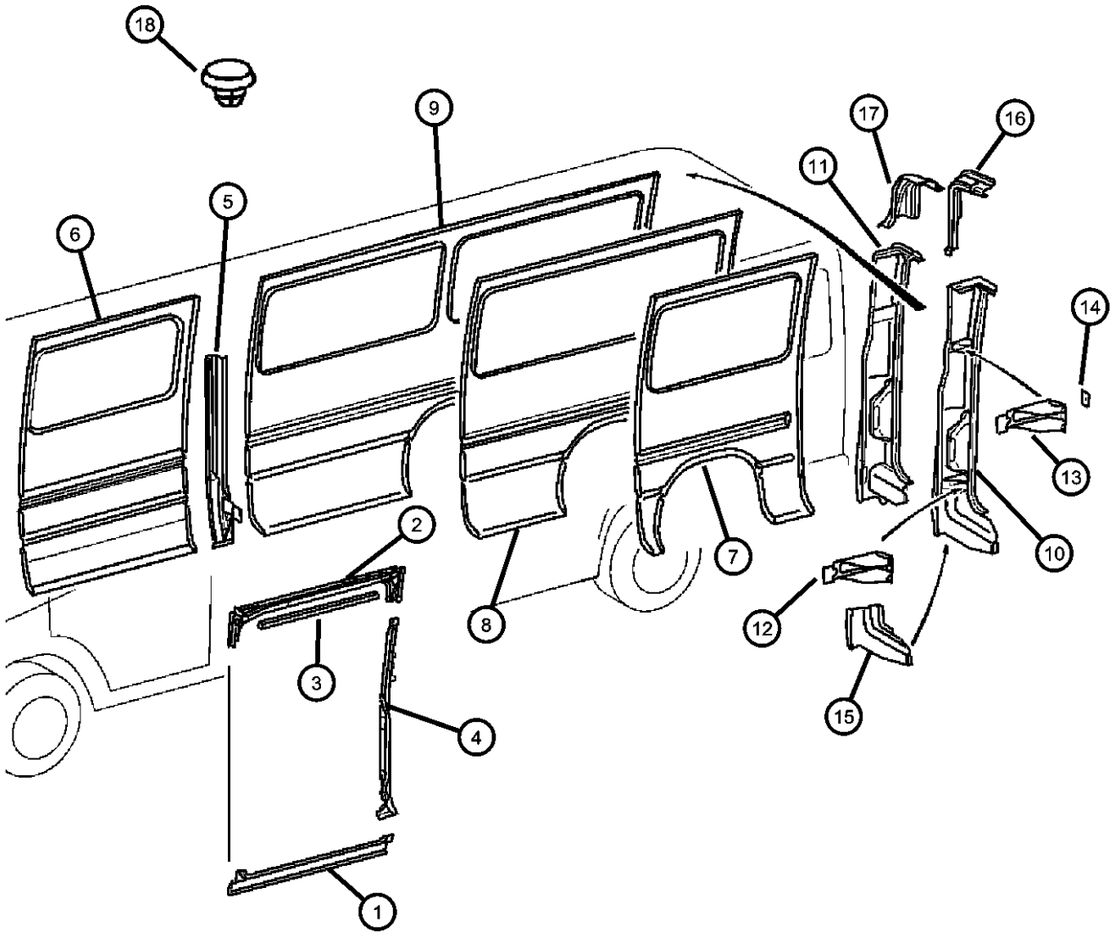

ITEM	PART NUMBER	QTY	LINE	SERIES	BODY	ENGINE	TRANS	TRIM	DESCRIPTION
1									PANEL, Sill
	05104214AA	1	2, 6		11, 12, 14, 15, 16				
		1	2, 6		51, 52, 54, 55, 56				
		1	3, 7		12, 15, 16				
2									PANEL, Cargo Compartment, Upper
	05104179AA	1	2, 6		11, 12, 14, 15, 16				
		1	2, 6		51, 52, 54, 55, 56				
		1	3, 7		12, 15, 16				
3									TRACK, Sliding Door
	05122036AA	1	2, 6		11, 12, 14, 15, 16				
		1	2, 6		51, 52, 54, 55, 56				
		1	3, 7		12, 15, 16				
4									PILLAR, Side Cargo Door
	05104166AA	1	2, 6		11, 12, 14, 15, 16				[140 & 158] Inch Wheelbase
		1	2, 6		51, 52, 54, 55, 56				[140 & 158] Inch Wheelbase
		1	3, 7		12, 15, 16				[140 & 158] Inch Wheelbase
	05121699AA	1	2, 6		11, 14				[118] Inch Wheelbase
		1	2, 6		51, 54				[118] Inch Wheelbase
		1	2, 6		52, 55, 56				[118] Inch Wheelbase
		1	3, 7		12, 15, 16				[118] Inch Wheelbase
		1	2, 6		12, 15, 16				[118] Inch Wheelbase
5									PILLAR, Side Cargo Door
	05121704AA	1	2, 6		12, 15, 16				[140 & 158] Inch Wheelbase
		1	2, 6		52, 55, 56				[140 & 158] Inch Wheelbase
		1	3, 7		12, 15, 16				[140 & 158] Inch Wheelbase

SPRINTER (VA)

SERIES	LINE	BODY	ENGINE	TRANSMISSION
L = LOWLINE	3 = HD DODGE 2WD 6 = Lt. Duty DODGE 4WD 2 = Med. Duty DODGE 2WD 7 = Med. Duty DODGE 4WD	55 = Wagon 140" 54 = Wagon 118" 52 = Wagon 140" 51 = Wagon 118" 12 = Van 140" 11 = Van 118" 06 = Front Section 158" 14 = Van 118" 15 = Van 140" 16 = Van 158" 56 = Wagon 158" 01 = Chassis Forward Control 118" 02 = Chassis Forward Control 140"	EX8 = Engine-2.7L I5 Mercedes Turbo Diesel	DGJ = Transmission-5-Spd. Automatic,W5A580

AR = use ase required - = Non illustrrated part

Right Side Panels, Cargo
Figure SVA-920

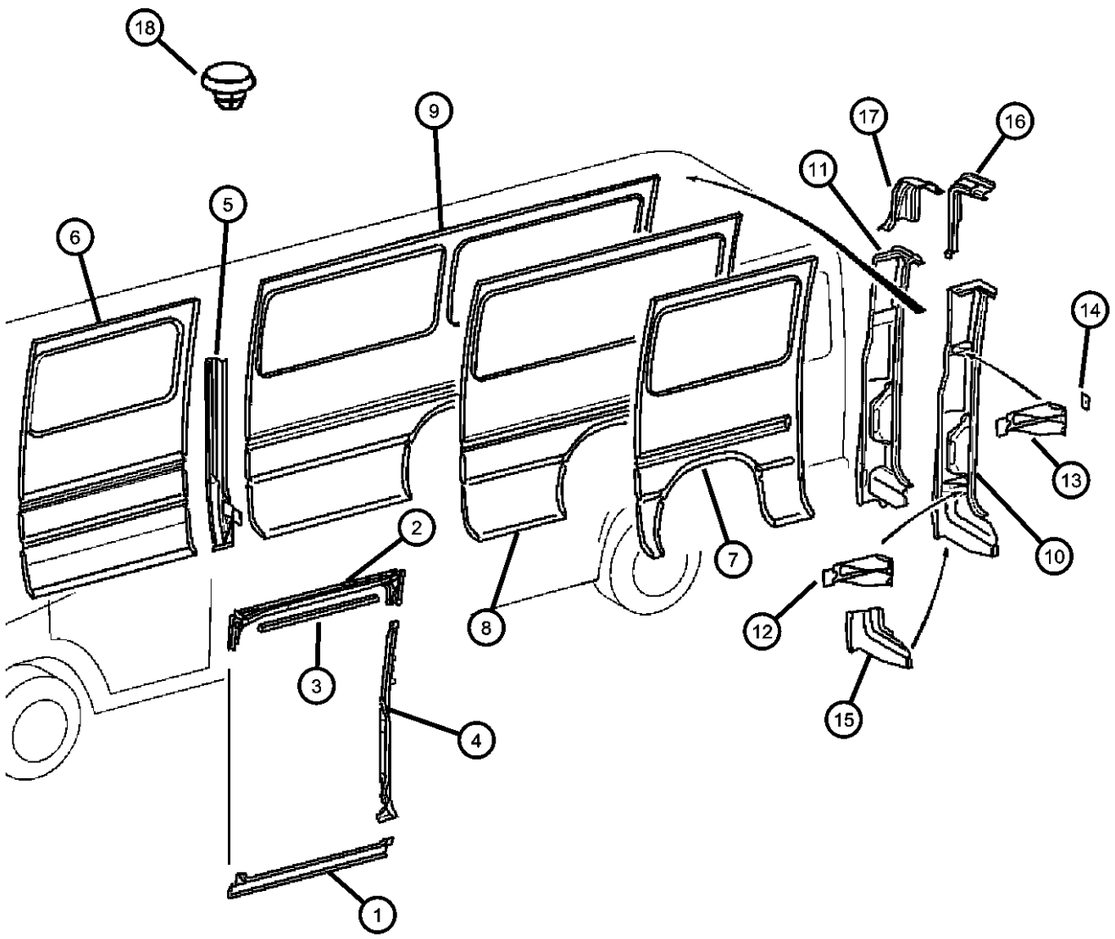

ITEM	PART NUMBER	QTY	LINE	SERIES	BODY	ENGINE	TRANS	TRIM	DESCRIPTION
	05131053AA	1	2, 6		11, 14				[118] Inch Wheelbase
		1	2, 6		51, 54				[118] Inch Wheelbase
6									PANEL, Body Side Front
	05104205AA	1	2, 6		11, 12, 14, 15, 16				
		1	3, 7		12, 15, 16				
7									PANEL, Body Side Rear
	05131138AA	1	2, 6		51, 52, 54, 55, 56				
	05131146AA	1	2, 6		11, 14				
		1	2, 6		51, 54				
8									PANEL, Body Side Rear
	05121965AA	1	2, 6		12, 15				Without Windows, 15 Inch Wheels,Outer
	05121967AA	1	2, 6		12, 15				With Windows,Outer
		1	2, 6		52, 55				With Windows,Outer
	05121993AA	1	3, 7		12, 15				
	05131161AA	1	2, 6		12, 15				Without Windows, 16 Inch Wheels,Outer
9									PANEL, Body Side Rear
	05121970AA	1	2, 6		16				With Windows, Without [R16] Wheels
	05104225AA	1	2, 6		16				No Windows, Without [R16] Wheels
	05121998AA	1							
		1	2, 6		56				With Windows, Without [R16] Wheels
	05131173AA	1	2, 6		16				No Windows, With [R16] Wheels
	05131178AA	1	2, 6		56				With Windows & [R16] Wheels
		1	2, 6		16				With Windows & [R16] Wheels
10									PANEL, D Pillar

SPRINTER (VA)

SERIES	LINE	BODY	ENGINE	TRANSMISSION
L = LOWLINE	3 = HD DODGE 2WD 6 = Lt. Duty DODGE 4WD 2 = Med. Duty DODGE 2WD 7 = Med. Duty DODGE 4WD	55 = Wagon 140" 54 = Wagon 118" 52 = Wagon 140" 51 = Wagon 118" 12 = Van 140" 11 = Van 118" 06 = Front Section 158" 14 = Van 118" 15 = Van 140" 16 = Van 158" 56 = Wagon 158" 01 = Chassis Forward Control 118" 02 = Chassis Forward Control 140"	EX8 = Engine-2.7L I5 Mercedes Turbo Diesel	DGJ = Transmission-5-Spd. Automatic,W5A580

Right Side Panels, Cargo
Figure SVA-920

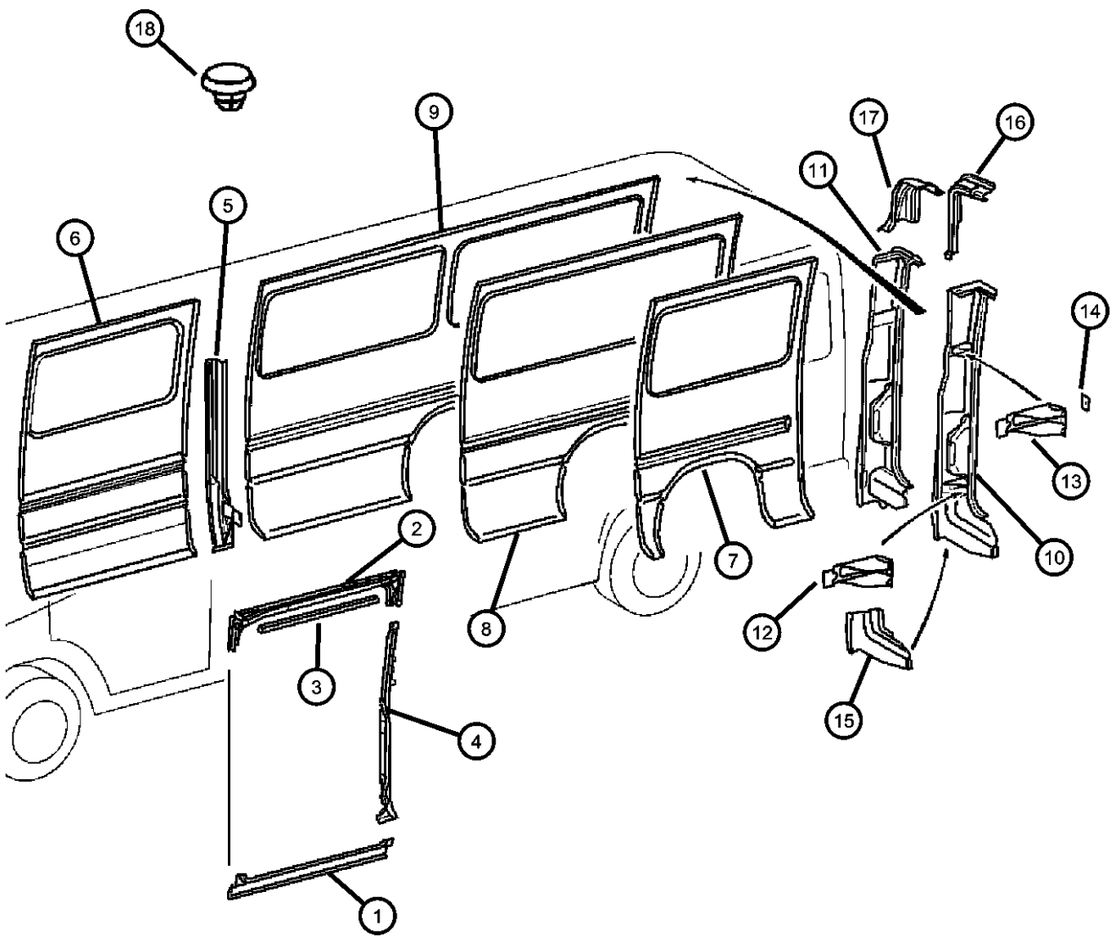

ITEM	PART NUMBER	QTY	LINE	SERIES	BODY	ENGINE	TRANS	TRIM	DESCRIPTION
	05104176AA	1	2, 6		11, 12, 14, 15, 16				With High Roof
		1	2, 6		51, 52, 54, 55, 56				With High Roof
		1	3, 7		12, 15, 16				With High Roof
	05121679AA	1	2, 6		11, 12, 14, 15, 16				With Low Roof
		1	2, 6		51, 52, 54, 55, 56				With Low Roof
		1	3, 7		12, 15, 16				With Low Roof
11									PANEL, D Pillar
	05104208AA	1	2, 6		11, 12, 14, 15, 16				
		1	3, 7		12, 15, 16				
		1	2, 6		51, 52, 54, 55, 56				
12									REINFORCEMENT, Rear door hinge
	05104209AA	1	2, 6		11, 12, 14, 15, 16				
		1	3, 7		12, 15, 16				
		1	2, 6		51, 52, 54, 55, 56				
13									REINFORCEMENT, Rear door hinge
	05104215AA	1	2, 6		11, 12, 14, 15, 16				
		1	2, 6		51, 52, 54, 55, 56				
		1	3, 7		12, 15, 16				
14									PLATE, Rear Door Hinge
	05104188AA	2	2, 6		11, 12, 14, 15, 16				
		2	2, 6		51, 52, 54, 55, 56				
		2	3, 7		12, 15, 16				

SPRINTER (VA)

SERIES	LINE	BODY	ENGINE	TRANSMISSION
L = LOWLINE	3 = HD DODGE 2WD 6 = Lt. Duty DODGE 4WD 2 = Med. Duty DODGE 2WD 7 = Med. Duty DODGE 4WD	55 = Wagon 140" 54 = Wagon 118" 52 = Wagon 140" 51 = Wagon 118" 12 = Van 140" 11 = Van 118" 06 = Front Section 158" 14 = Van 118" 15 = Van 140" 16 = Van 158" 56 = Wagon 158" 01 = Chassis Forward Control 118" 02 = Chassis Forward Control 140"	EX8 = Engine-2.7L I5 Mercedes Turbo Diesel	DGJ = Transmission-5-Spd. Automatic,W5A580

Right Side Panels, Cargo
Figure SVA-920

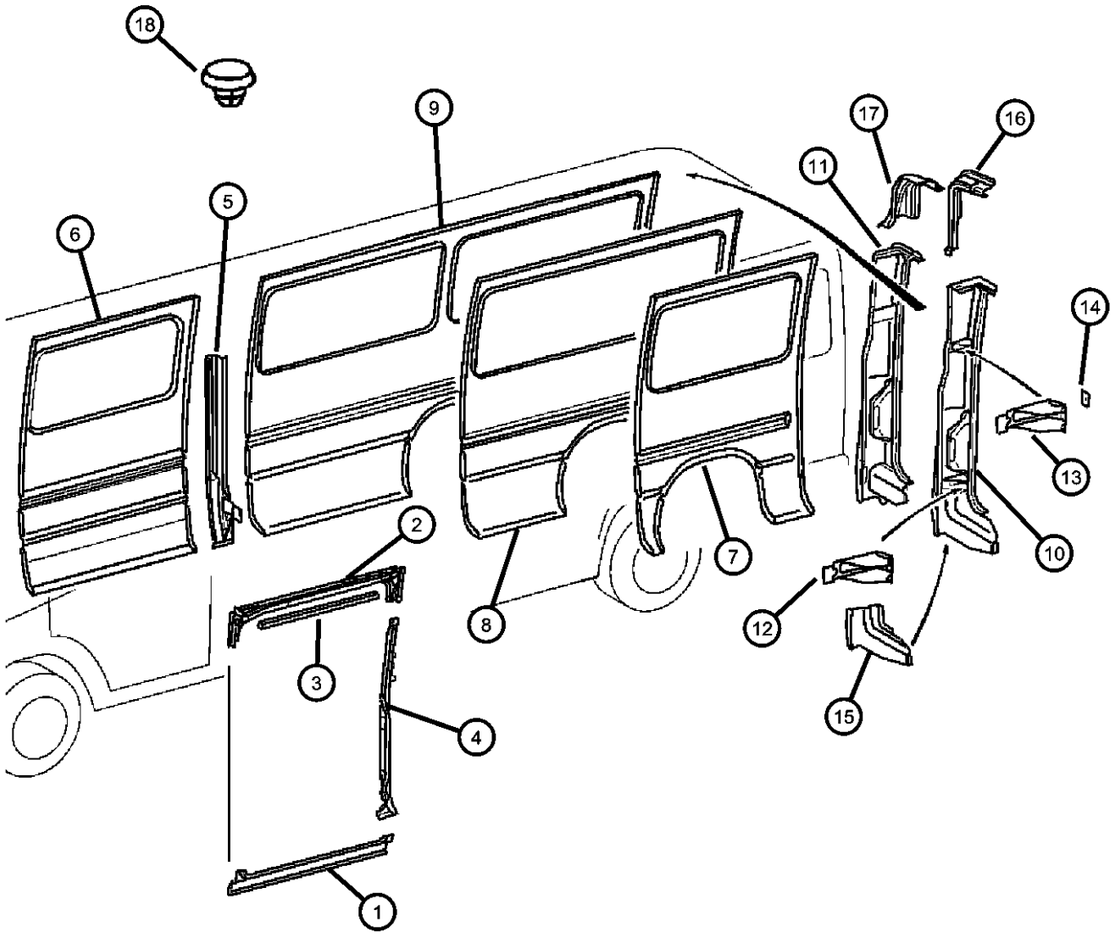

ITEM	PART NUMBER	QTY	LINE	SERIES	BODY	ENGINE	TRANS	TRIM	DESCRIPTION
15									EXTENSION, D Pillar Lower
	05104211AA	1	2, 6		11, 12, 14, 15, 16				
		1	2, 6		51, 52, 54, 55, 56				
		1	3, 7		12, 15, 16				
16									EXTENSION, D Pillar Upper
	05104224AA	1	2, 6		11, 12, 14, 15, 16				
		1	2, 6		51, 52, 54, 55, 56				
		1	3, 7		12, 15, 16				
17									PANEL, D Pillar Trim
	05104218AA	1	2, 6		11, 12, 14, 15, 16				
		1	2, 6		51, 52, 54, 55, 56				
		1	3, 7		12, 15, 16				
18									PLUG, Expansion
	05133657AA	1	2, 6		11, 12, 14, 15, 16				
		1	2, 6		51, 52, 54, 55, 56				
		1	3, 7		12, 15, 16				

SPRINTER (VA)

SERIES	LINE	BODY	ENGINE	TRANSMISSION
L = LOWLINE	3 = HD DODGE 2WD 6 = Lt. Duty DODGE 4WD 2 = Med. Duty DODGE 2WD 7 = Med. Duty DODGE 4WD	55 = Wagon 140" 54 = Wagon 118" 52 = Wagon 140" 51 = Wagon 118" 12 = Van 140" 11 = Van 118" 06 = Front Section 158" 14 = Van 118" 15 = Van 140" 16 = Van 158" 56 = Wagon 158" 01 = Chassis Forward Control 118" 02 = Chassis Forward Control 140"	EX8 = Engine-2.7L I5 Mercedes Turbo Diesel	DGJ = Transmission-5-Spd. Automatic,W5A580

Right Side Panels, Wagon
Figure SVA-930

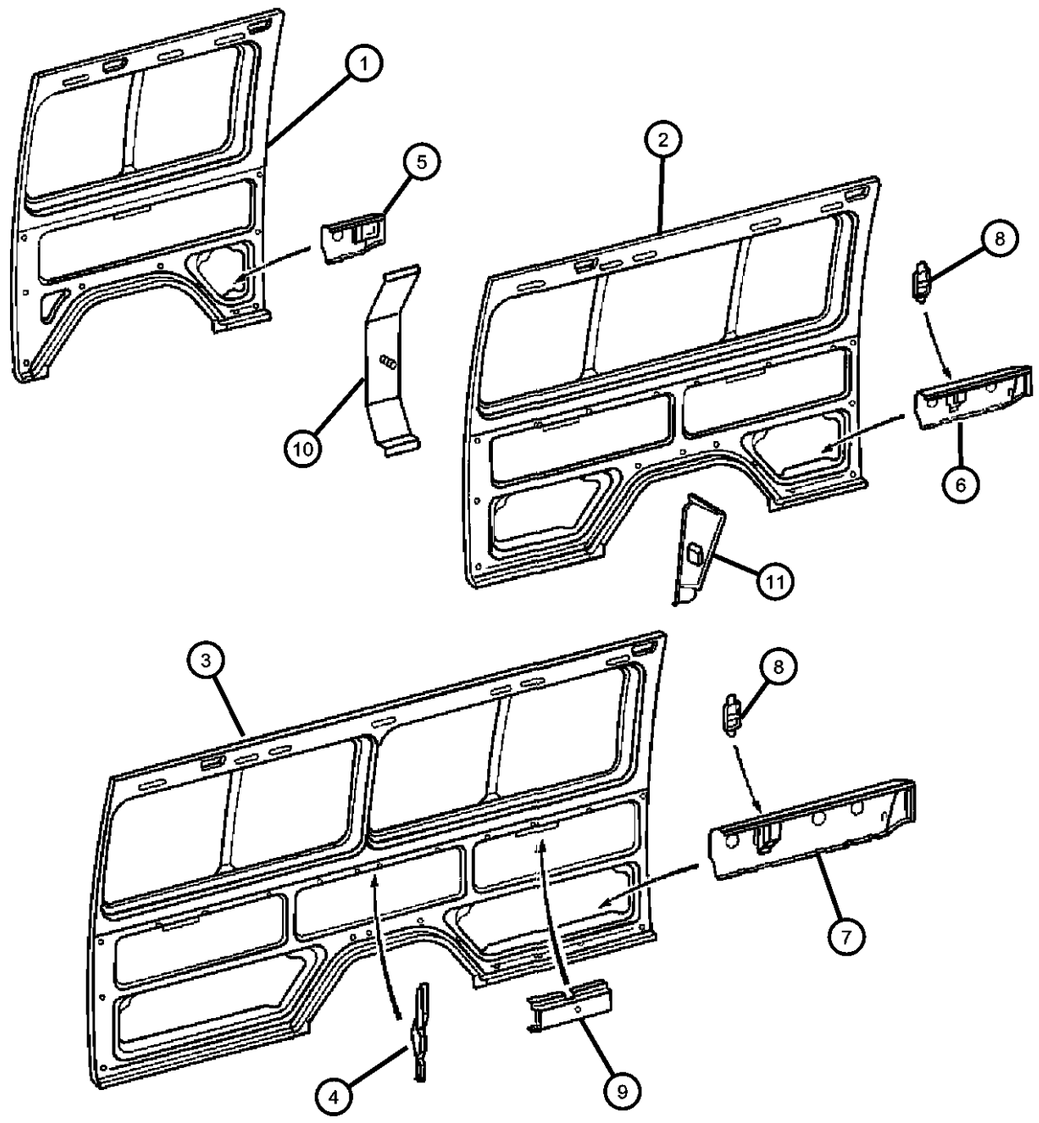

ITEM	PART NUMBER	QTY	LINE	SERIES	BODY	ENGINE	TRANS	TRIM	DESCRIPTION
1									PANEL, Body Side Rear, [118] Inch Wheelbase
	05121897AA	1	2, 6		11, 14				With Sliding Door
		1	2, 6		51, 54				With Sliding Door
	05131122AA	1	2, 6		11, 14				Without Sliding Door
		1	2, 6		51, 54				Without Sliding Door
2									PANEL, Body Side Rear, [140] Inch Wheelbase
	05121892AA	1	2, 3, 6, 7		12, 15, 52, 55				Without Sliding Door,Inner
	05121899AA	1	2, 6		12, 15				With Sliding Door,Inner
		1	2, 6		52, 55				With Sliding Door,Inner
		1	3, 7		12, 15				With Sliding Door,Inner
3									PANEL, Body Side Rear, [158] Inch Wheelbase
	05104203AA	1	2, 6		16				With Sliding Door
		1	2, 6		56				With Sliding Door
		1	3, 7		16				With Sliding Door
	05121895AA	1	2, 3, 6, 7		16, 56				Without Sliding Door
4									REINFORCEMENT, Quarter Inner
	05121707AA	1	2, 6		16				With 16x6 Steel Wheels
		1	2, 6		56				With 16x6 Steel Wheels
	05131056AA	1	2, 6		16				
		1	2, 6		56				
		1	3, 7		16				With 16x6 Steel Wheels
5									SUPPORT
	05121739AA	1	2, 6		11, 14				
		1	2, 6		51, 54				
6									SUPPORT, Sill Reinforcement
	05121743AA	1	2, 6		12, 15				
		1	2, 6		52, 55				

SPRINTER (VA)

SERIES	LINE	BODY	ENGINE	TRANSMISSION
L = LOWLINE	3 = HD DODGE 2WD 6 = Lt. Duty DODGE 4WD 2 = Med. Duty DODGE 2WD 7 = Med. Duty DODGE 4WD	55 = Wagon 140" 54 = Wagon 118" 52 = Wagon 140" 51 = Wagon 118" 12 = Van 140" 11 = Van 118" 06 = Front Section 158" 14 = Van 118" 15 = Van 140" 16 = Van 158" 56 = Wagon 158" 01 = Chassis Forward Control 118" 02 = Chassis Forward Control 140"	EX8 = Engine-2.7L I5 Mercedes Turbo Diesel	DGJ = Transmission-5-Spd. Automatic,W5A580

Right Side Panels, Wagon
Figure SVA-930

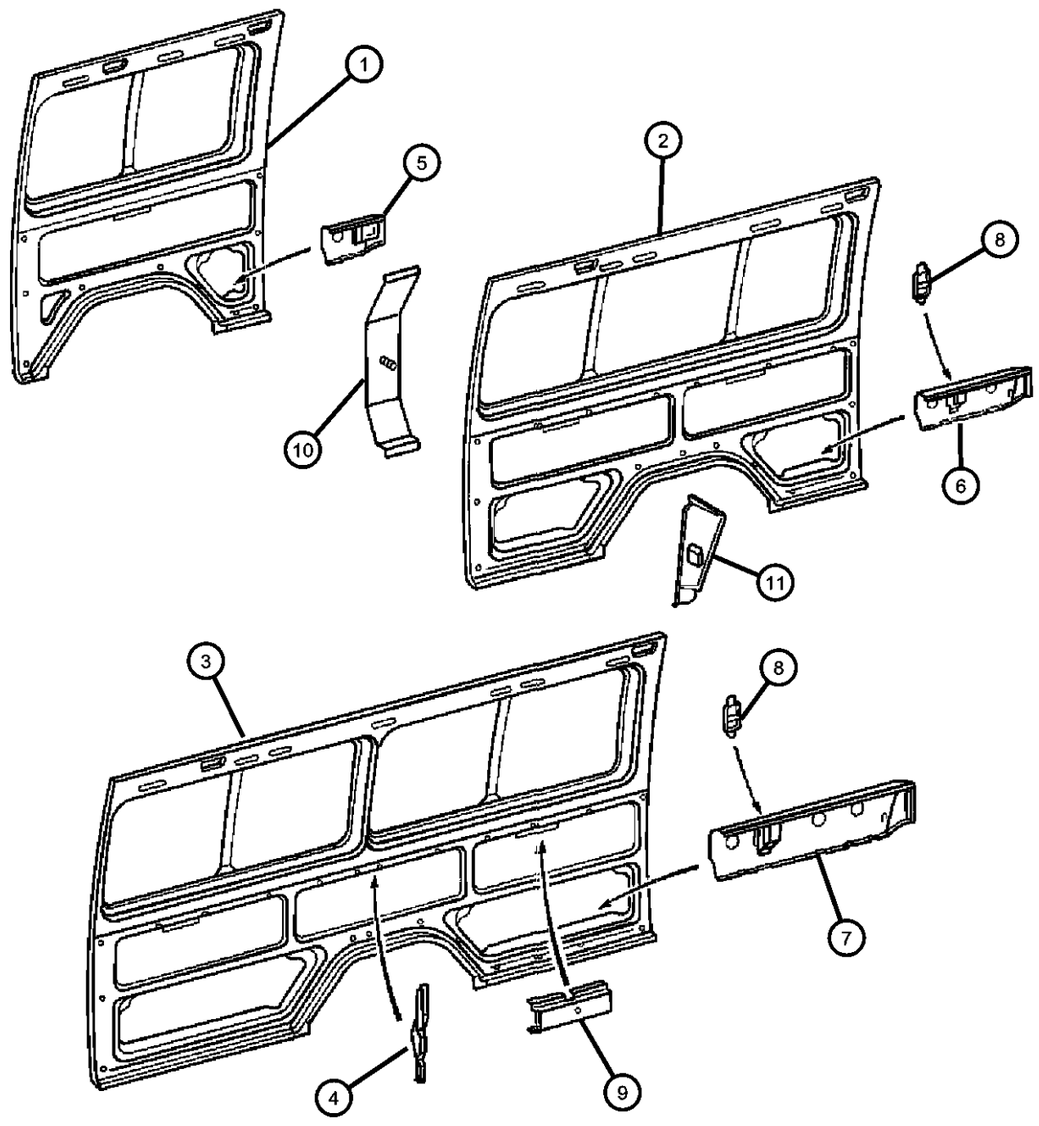

ITEM	PART NUMBER	QTY	LINE	SERIES	BODY	ENGINE	TRANS	TRIM	DESCRIPTION
		1	3, 7		12, 15				
7									SUPPORT, Sill Reinforcement
	05121747AA	1	2, 6		16				
		1	2, 6		56				
		1	3, 7		16				
8									PLUG, Body
	05125519AA	2	2, 6		15, 16, 12				
		2	2, 6		52, 55, 56				
		1	3, 7		12, 15, 16				
9									REINFORCEMENT, Side Panel
	05131057AA	2	2, 6		11, 12, 14, 15, 16				
		1	2, 6		51, 52, 54, 55, 56				
10									BRACKET
	05127239AA	2	2, 6		12, 15				
		3	2, 6		16				
		2	2, 6		52, 55				
		3	2, 6		56				
		5	3, 7		12, 15				
		7	3, 7		16				
11									PANEL, Rear Side
	05129938AA	2	2, 6		11, 12, 14, 15, 16				
		2	2, 6		51, 52, 54, 55, 56				

SPRINTER (VA)

SERIES	LINE	BODY	ENGINE	TRANSMISSION
L = LOWLINE	3 = HD DODGE 2WD 6 = Lt. Duty DODGE 4WD 2 = Med. Duty DODGE 2WD 7 = Med. Duty DODGE 4WD	55 = Wagon 140" 54 = Wagon 118" 52 = Wagon 140" 51 = Wagon 118" 12 = Van 140" 11 = Van 118" 06 = Front Section 158" 14 = Van 118" 15 = Van 140" 16 = Van 158" 56 = Wagon 158" 01 = Chassis Forward Control 118" 02 = Chassis Forward Control 140"	EX8 = Engine-2.7L I5 Mercedes Turbo Diesel	DGJ = Transmission-5-Spd. Automatic,W5A580

AR = use ase required - = Non illustrrated part

Left Side Cargo Door Pillars & Wheelhouse
Figure SVA-940

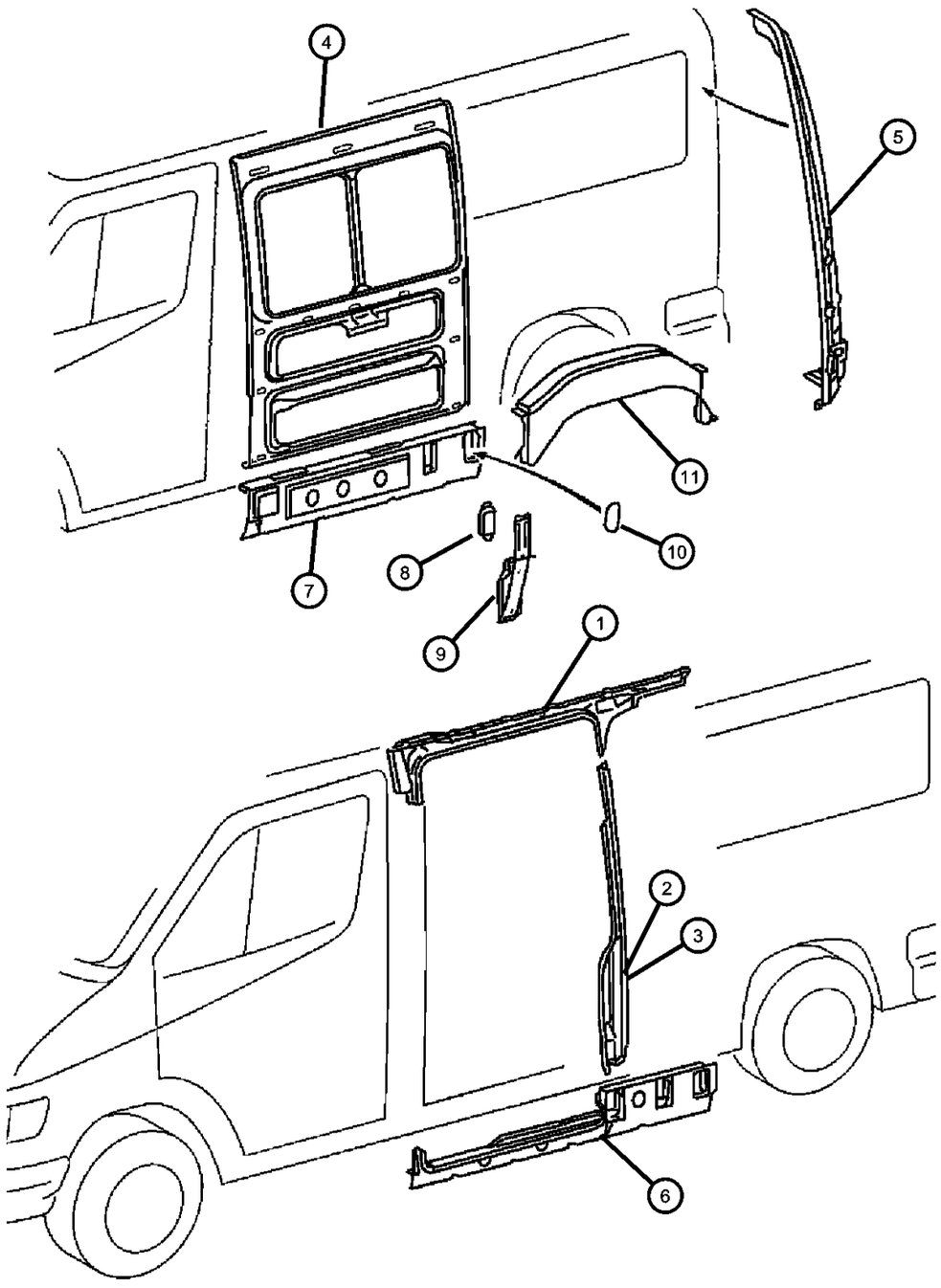

ITEM	PART NUMBER	QTY	LINE	SERIES	BODY	ENGINE	TRANS	TRIM	DESCRIPTION
1									REINFORCEMENT, Body Side Aperture
	05121903AA	1	2, 6		11, 12, 14, 15, 16				
		1	2, 6		51, 52, 54, 55, 56				
		1	3, 7		12, 15, 16				
2									PILLAR, Side Cargo Door
	05121914AA	1	2, 6		11, 12, 14, 15, 16				
		1	2, 6		51, 52, 54, 55, 56				
		1	3, 7		12, 15, 16				
3									REINFORCEMENT, Quarter Inner
	05121706AA	1	2, 6		16				
		1	2, 6		56				
		1	3, 7		16				
4									PANEL, Body Side Front
	05104197AA	1	2, 6		51, 52, 54, 55, 56				
		1	2, 6		11, 12, 14, 15, 16				
		1	3, 7		12, 15, 16				
5									PILLAR, Rear Cargo Door Hinge
	05104177AA	1	2, 6		11, 12, 14, 15, 16				With High Roof
		1	2, 6		54, 55, 56, 51, 52				With High Roof
		1	3, 7		12, 15, 16				With High Roof
	05121906AA	1	2, 6		51, 52, 54, 55, 56				With Low Roof
		1	3, 7		12, 15, 16				With Low Roof
		1	2, 6		11, 12, 14, 15, 16				With Low Roof
6									SUPPORT, Sill Reinforcement

SPRINTER (VA)

SERIES	LINE	BODY	ENGINE	TRANSMISSION
L = LOWLINE	3 = HD DODGE 2WD 6 = Lt. Duty DODGE 4WD 2 = Med. Duty DODGE 2WD 7 = Med. Duty DODGE 4WD	55 = Wagon 140" 54 = Wagon 118" 52 = Wagon 140" 51 = Wagon 118" 12 = Van 140" 11 = Van 118" 06 = Front Section 158" 14 = Van 118" 15 = Van 140" 16 = Van 158" 56 = Wagon 158" 01 = Chassis Forward Control 118" 02 = Chassis Forward Control 140"	EX8 = Engine-2.7L I5 Mercedes Turbo Diesel	DGJ = Transmission-5-Spd. Automatic,W5A580

Left Side Cargo Door Pillars & Wheelhouse
Figure SVA-940

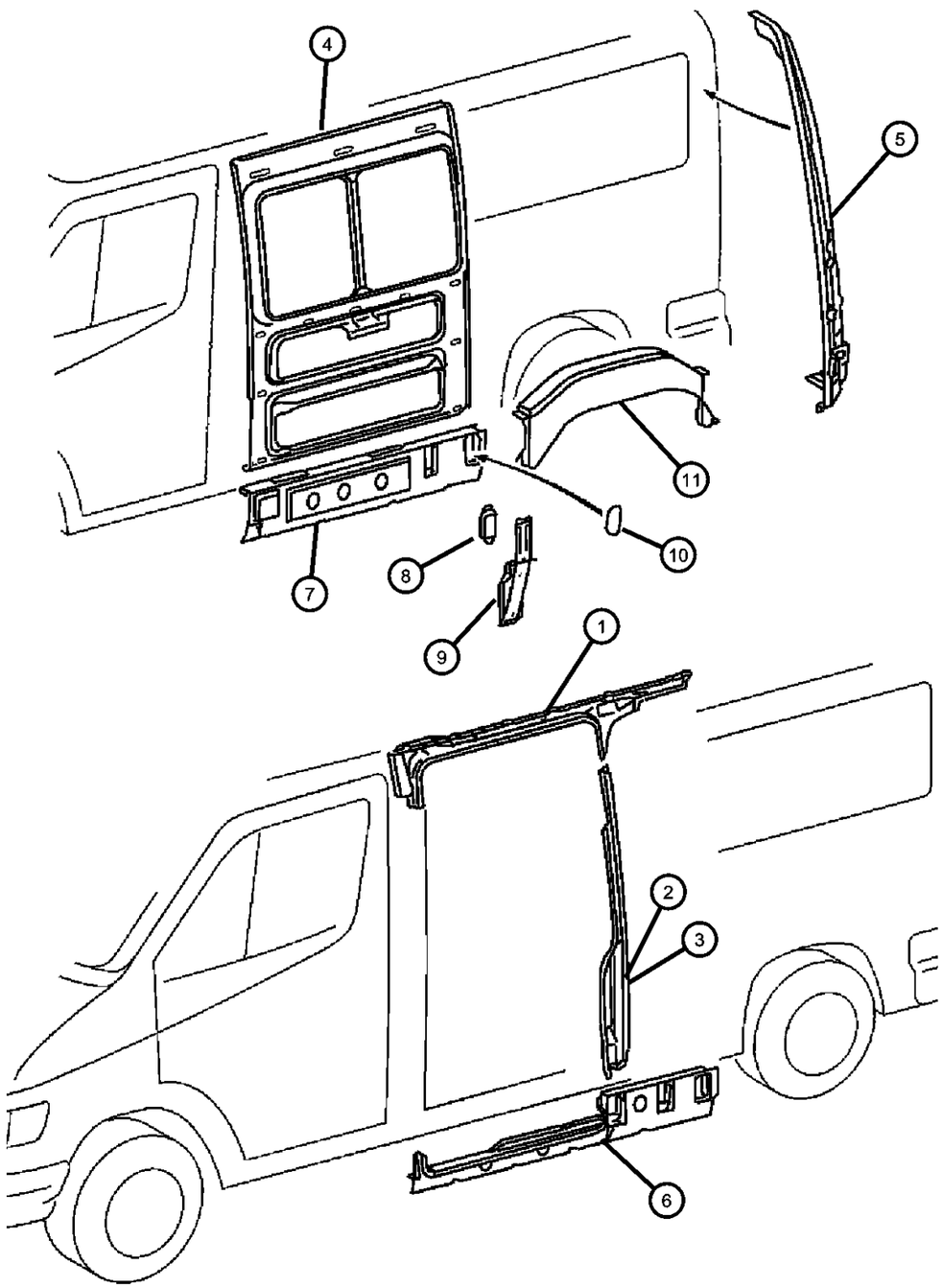

ITEM	PART NUMBER	QTY	LINE	SERIES	BODY	ENGINE	TRANS	TRIM	DESCRIPTION
	05121749AA	1	2, 6		11, 14				With 118 Inch Wheelbase
		1	2, 6		51, 54				With 118 Inch Wheelbase
	05121751AA	1	2, 6		12, 15				With 140 Inch Wheelbase
		1	2, 6		52, 55				With 140 Inch Wheelbase
	05121774AA	1	3, 7		12, 15				With 140 Inch Wheelbase
	05121778AA	1	3, 7		16				With 158 Inch Wheelbase
	05121754AA	1	2, 6		16				With 158 Inch Wheelbase
		1	2, 6		56				With 158 Inch Wheelbase
7									SUPPORT, Sill Reinforcement
	05104175AA	1	2, 6		16				With 158 Inch Wheelbase
		1	2, 6		56				With 158 Inch Wheelbase
	05121759AA	1	2, 6		11, 14				With 118 Inch Wheelbase
		1	2, 6		51, 54				With 118 Inch Wheelbase
	05121761AA	1	2, 6		12, 15				With 140 Inch Wheelbase
		1	2, 6		52, 55				With 140 Inch Wheelbase
	05121764AA	1	3, 7		12, 15				With 140 Inch Wheelbase
	05121769AA	1	3, 7		16				With 158 Inch Wheelbase
8									PLUG, Body
	05125519AA	1	2, 6		11, 14				
		3	2, 6		12, 15, 16				
		2	2, 6		52, 55, 56				
		1	2, 6		51, 54				
		2	2, 6		12, 15, 16				
9									REINFORCEMENT, Side Panel
	05104198AA	1	2, 6		11, 12, 14, 15, 16				
		1	2, 6		51, 52, 54, 55, 56				
		1	3, 7		12, 15, 16				

SPRINTER (VA)

SERIES	LINE	BODY	ENGINE	TRANSMISSION
L = LOWLINE	3 = HD DODGE 2WD 6 = Lt. Duty DODGE 4WD 2 = Med. Duty DODGE 2WD 7 = Med. Duty DODGE 4WD	55 = Wagon 140" 54 = Wagon 118" 52 = Wagon 140" 51 = Wagon 118" 12 = Van 140" 11 = Van 118" 06 = Front Section 158" 14 = Van 118" 15 = Van 140" 16 = Van 158" 56 = Wagon 158" 01 = Chassis Forward Control 118" 02 = Chassis Forward Control 140"	EX8 = Engine-2.7L I5 Mercedes Turbo Diesel	DGJ = Transmission-5-Spd. Automatic,W5A580

Left Side Cargo Door Pillars & Wheelhouse
Figure SVA-940

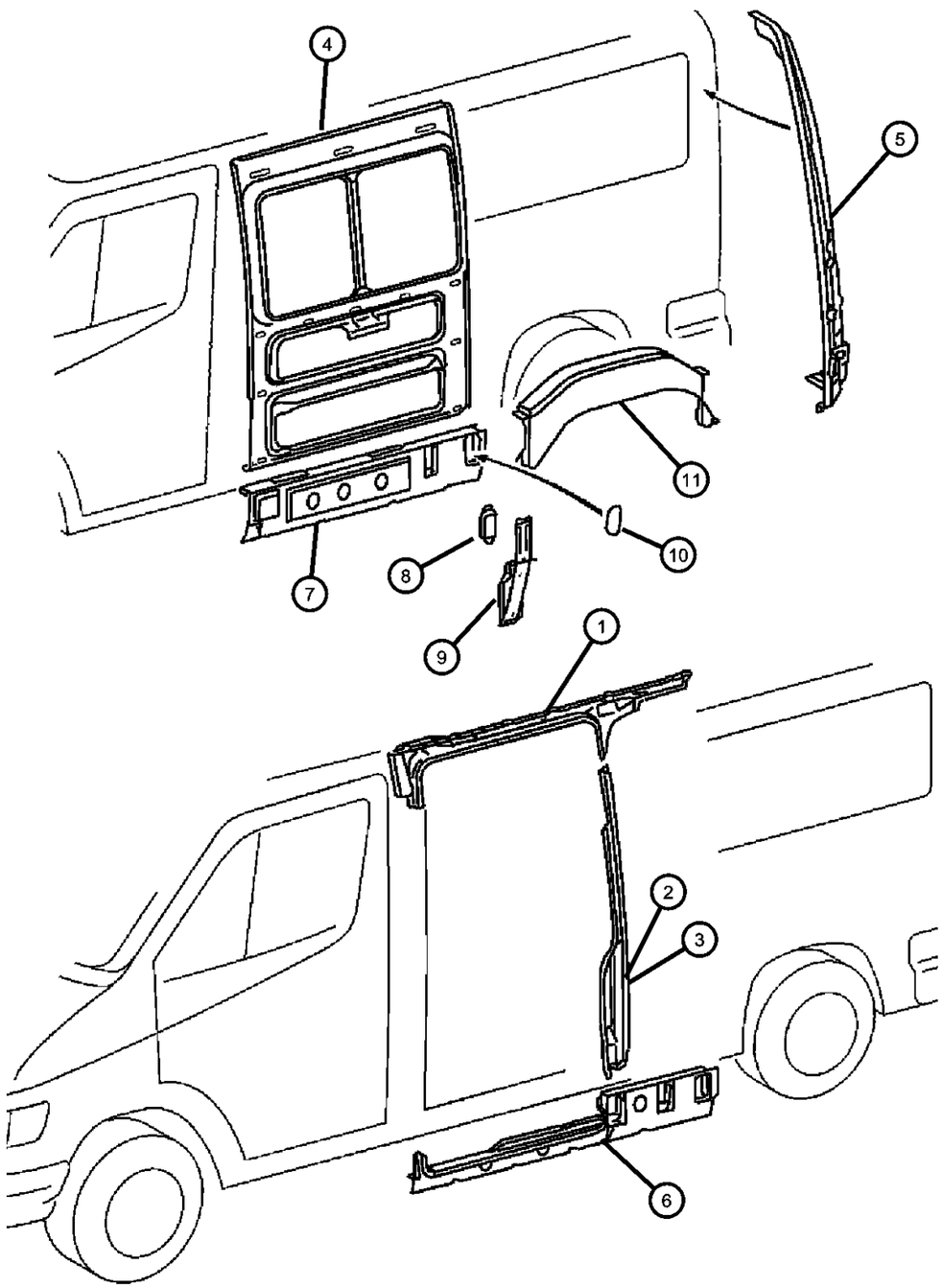

ITEM	PART NUMBER	QTY	LINE	SERIES	BODY	ENGINE	TRANS	TRIM	DESCRIPTION
10									COVER, Sill
	05121838AA	1	2, 6		11, 12, 14, 15, 16				
		1	2, 6		51, 52, 54, 55, 56				
		1	3, 7		12, 15, 16				
11	05121862AA	1	2, 6		11, 12, 14, 15, 16				WHEELHOUSE

SPRINTER (VA)

SERIES	LINE	BODY	ENGINE	TRANSMISSION
L = LOWLINE	3 = HD DODGE 2WD 6 = Lt. Duty DODGE 4WD 2 = Med. Duty DODGE 2WD 7 = Med. Duty DODGE 4WD	55 = Wagon 140" 54 = Wagon 118" 52 = Wagon 140" 51 = Wagon 118" 12 = Van 140" 11 = Van 118" 06 = Front Section 158" 14 = Van 118" 15 = Van 140" 16 = Van 158" 56 = Wagon 158" 01 = Chassis Forward Control 118" 02 = Chassis Forward Control 140"	EX8 = Engine-2.7L I5 Mercedes Turbo Diesel	DGJ = Transmission-5-Spd. Automatic,W5A580

Left Side Panels, Cargo
Figure SVA-950

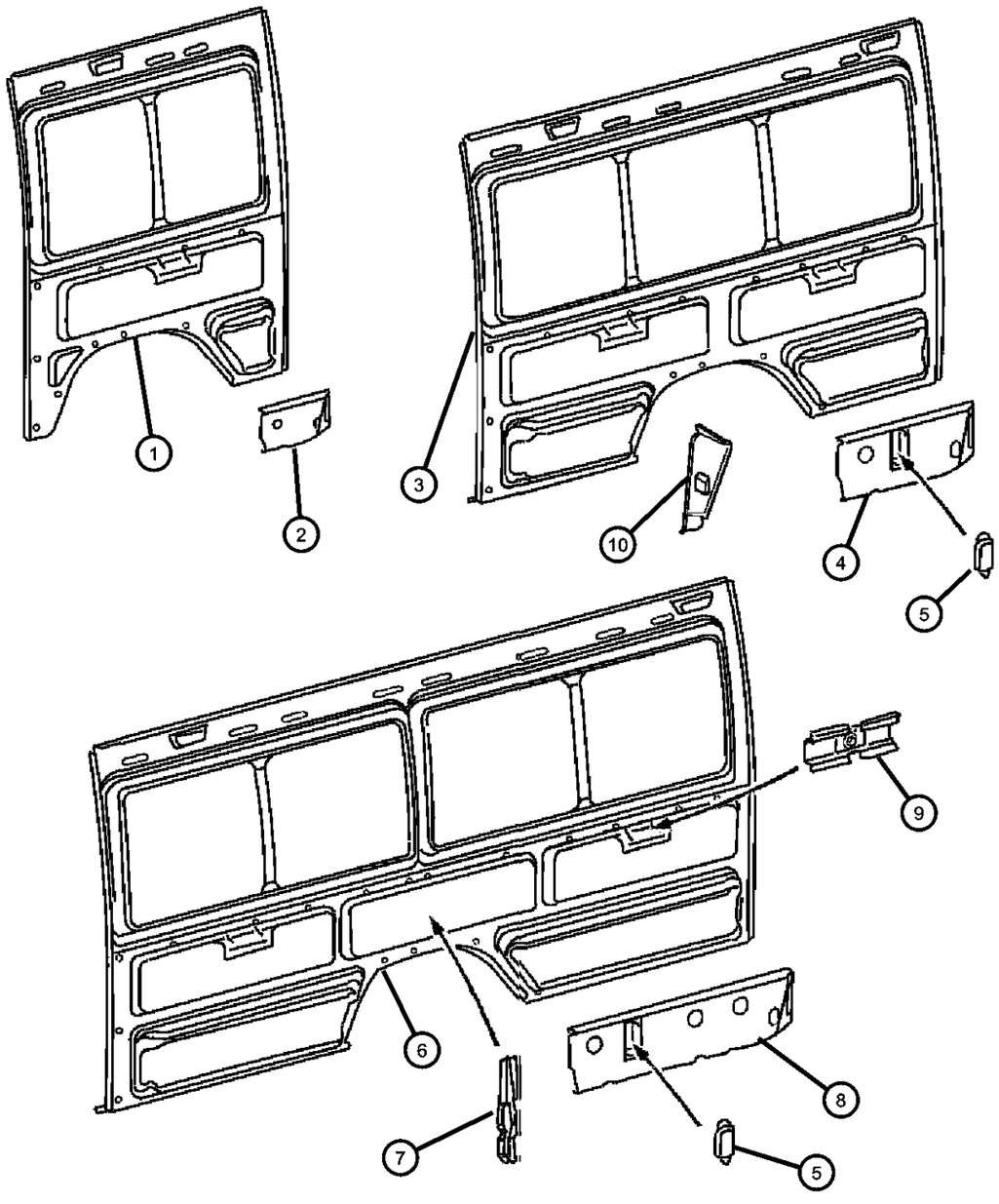

ITEM	PART NUMBER	QTY	LINE	SERIES	BODY	ENGINE	TRANS	TRIM	DESCRIPTION
1									PANEL, Body Side Rear, With 118 Inch Wheelbase
	05121888AA	1	2, 6		11, 14				
		1	2, 6		51, 54				
2									SUPPORT, With 118 Inch Wheelbase
	05121737AA	1	2, 6		11, 14				
		1	2, 6		51, 54				
3									PANEL, Body Side Rear, With 140 Inch Wheelbase
	05121890AA	1	2, 6		12, 15				
		1	2, 6		52, 55				
		1	3, 7		12, 15				
4									SUPPORT, With 140 & 158 Inch Wheelbase
	05121741AA	1	2, 6		12, 15				
		1	2, 6		52, 55				
		1	3, 7		12, 15				
5									PLUG, Body, With 140 Inch Wheelbase
	05125519AA	2	2, 6		12, 15, 16				
		1	2, 6		11, 14				
		1	2, 6		51, 54				
		3	2, 6		52, 55, 56				
		1	3, 7		12, 15, 16				
6									PANEL, Body Side Rear, With 158 Inch Wheelbase
	05104202AA	1	2, 6		16				
		1	2, 6		56				
		1	3, 7		16				
7									REINFORCEMENT, Quarter Inner, With 158 Inch Wheelbase

SPRINTER (VA)

SERIES	LINE	BODY	ENGINE	TRANSMISSION
L = LOWLINE	3 = HD DODGE 2WD 6 = Lt. Duty DODGE 4WD 2 = Med. Duty DODGE 2WD 7 = Med. Duty DODGE 4WD	55 = Wagon 140" 54 = Wagon 118" 52 = Wagon 140" 51 = Wagon 118" 12 = Van 140" 11 = Van 118" 06 = Front Section 158" 14 = Van 118" 15 = Van 140" 16 = Van 158" 56 = Wagon 158" 01 = Chassis Forward Control 118" 02 = Chassis Forward Control 140"	EX8 = Engine-2.7L I5 Mercedes Turbo Diesel	DGJ = Transmission-5-Spd. Automatic,W5A580

Left Side Panels, Cargo
Figure SVA-950

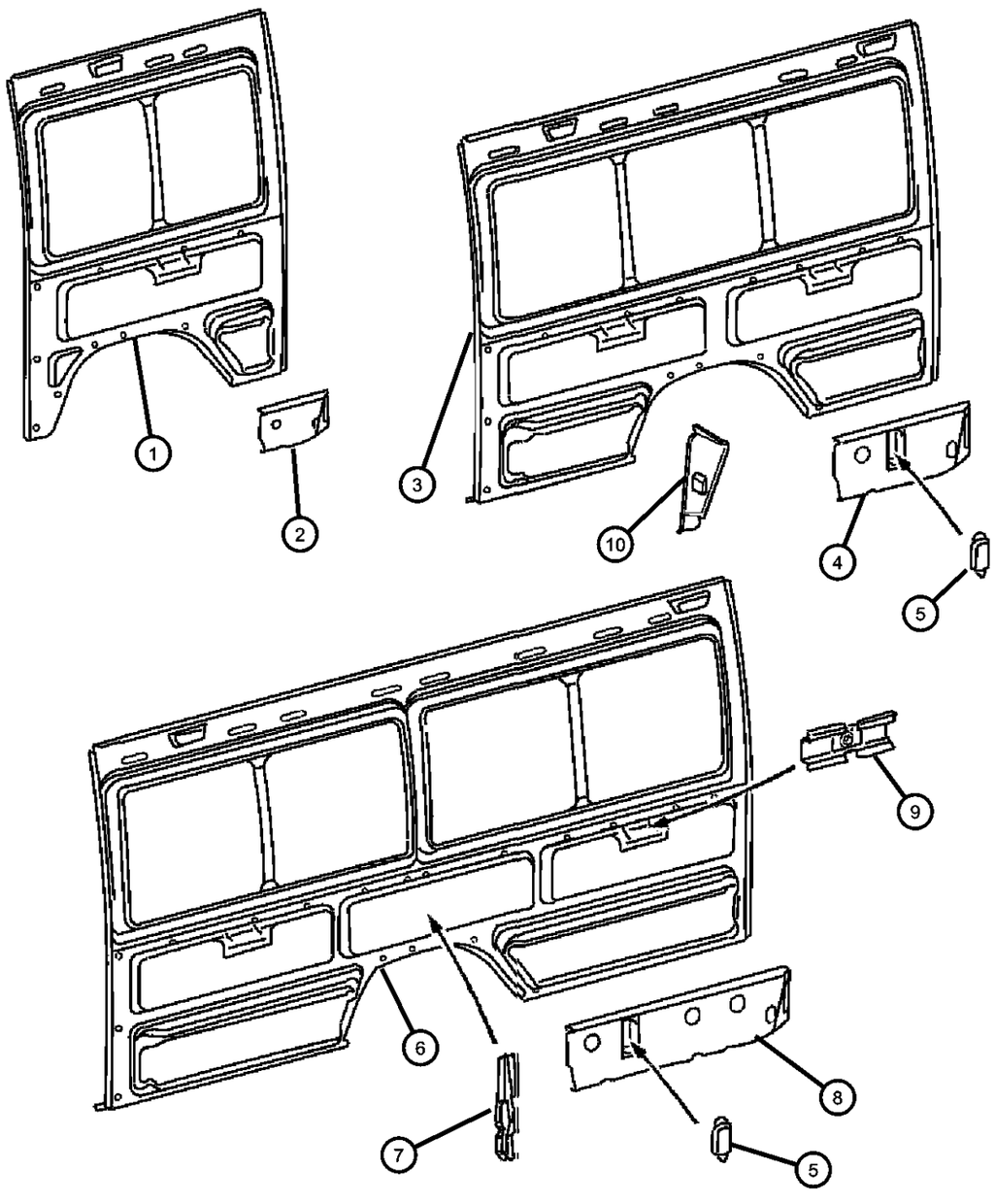

ITEM	PART NUMBER	QTY	LINE	SERIES	BODY	ENGINE	TRANS	TRIM	DESCRIPTION
	05121799AA	1	2, 6		16				
		1	2, 6		56				
8									SUPPORT, With 158 Inch Wheelbase
	05121745AA	1	2, 6		16				
		1	2, 6		56				
		1	3, 7		16				
9									REINFORCEMENT, Side Panel, With 158 Inch Wheelbase
	05131057AA	2	2, 6		11, 12, 14, 15, 16				
		1	2, 6		51, 52, 54, 55, 56				
10									PANEL, Rear Side
	05129937AA	2	2, 6		11, 12, 14, 15, 16				
		2	2, 6		51, 52, 54, 55, 56				

SPRINTER (VA)

SERIES	LINE	BODY	ENGINE	TRANSMISSION
L = LOWLINE	3 = HD DODGE 2WD 6 = Lt. Duty DODGE 4WD 2 = Med. Duty DODGE 2WD 7 = Med. Duty DODGE 4WD	55 = Wagon 140" 54 = Wagon 118" 52 = Wagon 140" 51 = Wagon 118" 12 = Van 140" 11 = Van 118" 06 = Front Section 158" 14 = Van 118" 15 = Van 140" 16 = Van 158" 56 = Wagon 158" 01 = Chassis Forward Control 118" 02 = Chassis Forward Control 140"	EX8 = Engine-2.7L I5 Mercedes Turbo Diesel	DGJ = Transmission-5-Spd. Automatic,W5A580

AR = use ase required - = Non illustrrated part

Left Side Panels, Wagon
Figure SVA-960

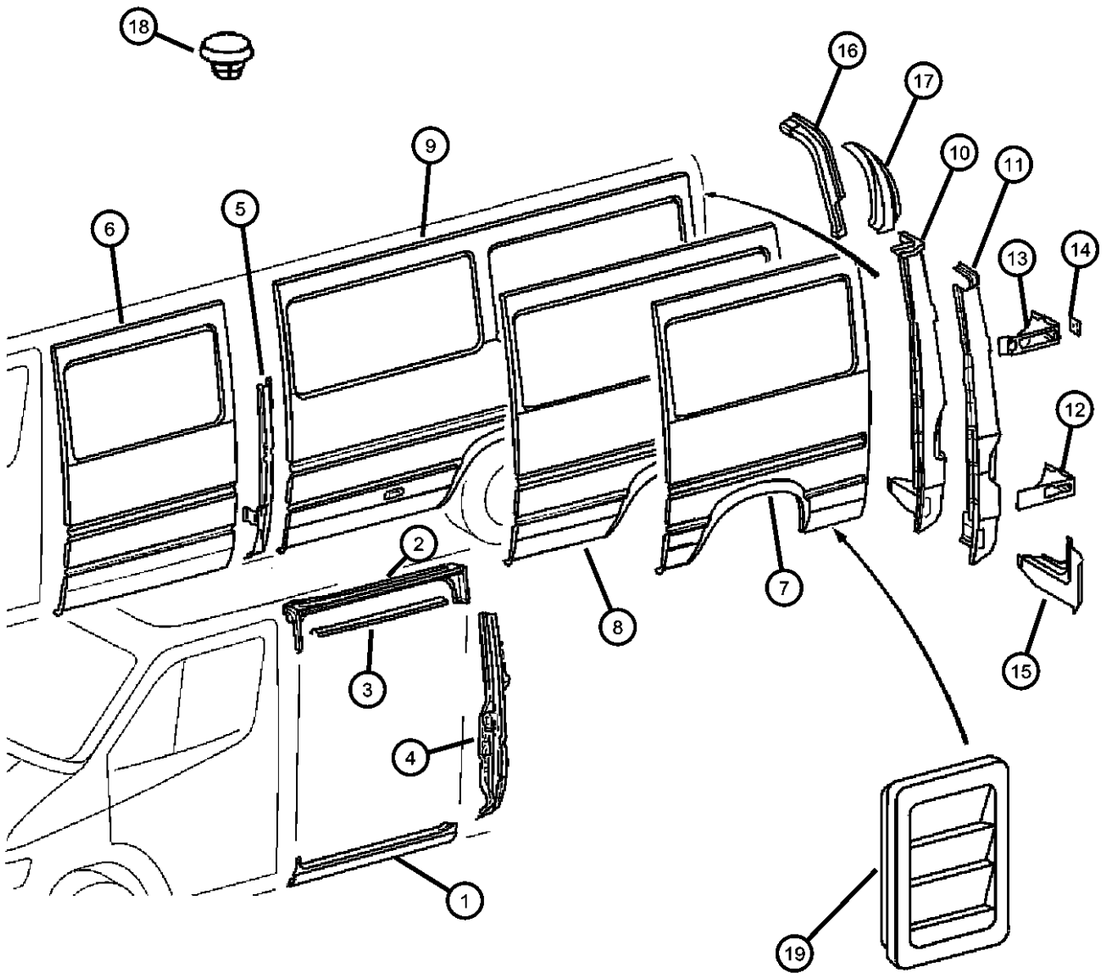

ITEM	PART NUMBER	QTY	LINE	SERIES	BODY	ENGINE	TRANS	TRIM	DESCRIPTION
1									PANEL, Sill
	05121937AA	1	2, 6		11, 12, 14, 15, 16				
		1	6, 2		51, 52, 54, 55, 56				
		1	3, 7		12, 15, 16				
2									PANEL, Cargo Compartment, Upper
	05121682AA	1	2, 6		51, 52, 54, 55, 56				
		1	3, 7		12, 15, 16				
		1	2, 6		11, 12, 14, 15, 16				
3									TRACK, Sliding Door
	05122035AA	1	2, 6		11, 12, 14, 15, 16				
		1	2, 6		51, 52, 54, 55, 56				
		1	3, 7		12, 15, 16				
4									PILLAR, Side Cargo Door
	05121696AA	1	2, 6		52, 55, 56				With 140 & 158 Inch Wheelbase
		1	2, 6		12, 15, 16				With 140 & 158 Inch Wheelbase
		1	3, 7		12, 15, 16				With 140 & 158 Inch Wheelbase
	05131051AA	1	2, 6		51, 54				With 118 Inch Wheelbase
	05131053AA	1	2, 6		11, 14				With 118 Inch Wheelbase
5									PILLAR, Side Cargo Door
	05104168AA	1	2, 6		11, 14				With 118 Inch Wheelbase
		1	2, 6		51, 54				With 118 Inch Wheelbase
	05104170AA	1	2, 6		12, 15, 16				With 140 & 158 Inch Wheelbase
		1	2, 6		52, 55, 56				With 140 & 158 Inch Wheelbase
		1	3, 7		12, 15, 16				With 140 & 158 Inch Wheelbase
6									PANEL, Body Side Front

SPRINTER (VA)

SERIES	LINE	BODY	ENGINE	TRANSMISSION
L = LOWLINE	3 = HD DODGE 2WD 6 = Lt. Duty DODGE 4WD 2 = Med. Duty DODGE 2WD 7 = Med. Duty DODGE 4WD	55 = Wagon 140" 54 = Wagon 118" 52 = Wagon 140" 51 = Wagon 118" 12 = Van 140" 11 = Van 118" 06 = Front Section 158" 14 = Van 118" 15 = Van 140" 16 = Van 158" 56 = Wagon 158" 01 = Chassis Forward Control 118" 02 = Chassis Forward Control 140"	EX8 = Engine-2.7L I5 Mercedes Turbo Diesel	DGJ = Transmission-5-Spd. Automatic,W5A580

AR = use ase required - = Non illustrrated part

Left Side Panels, Wagon
Figure SVA-960

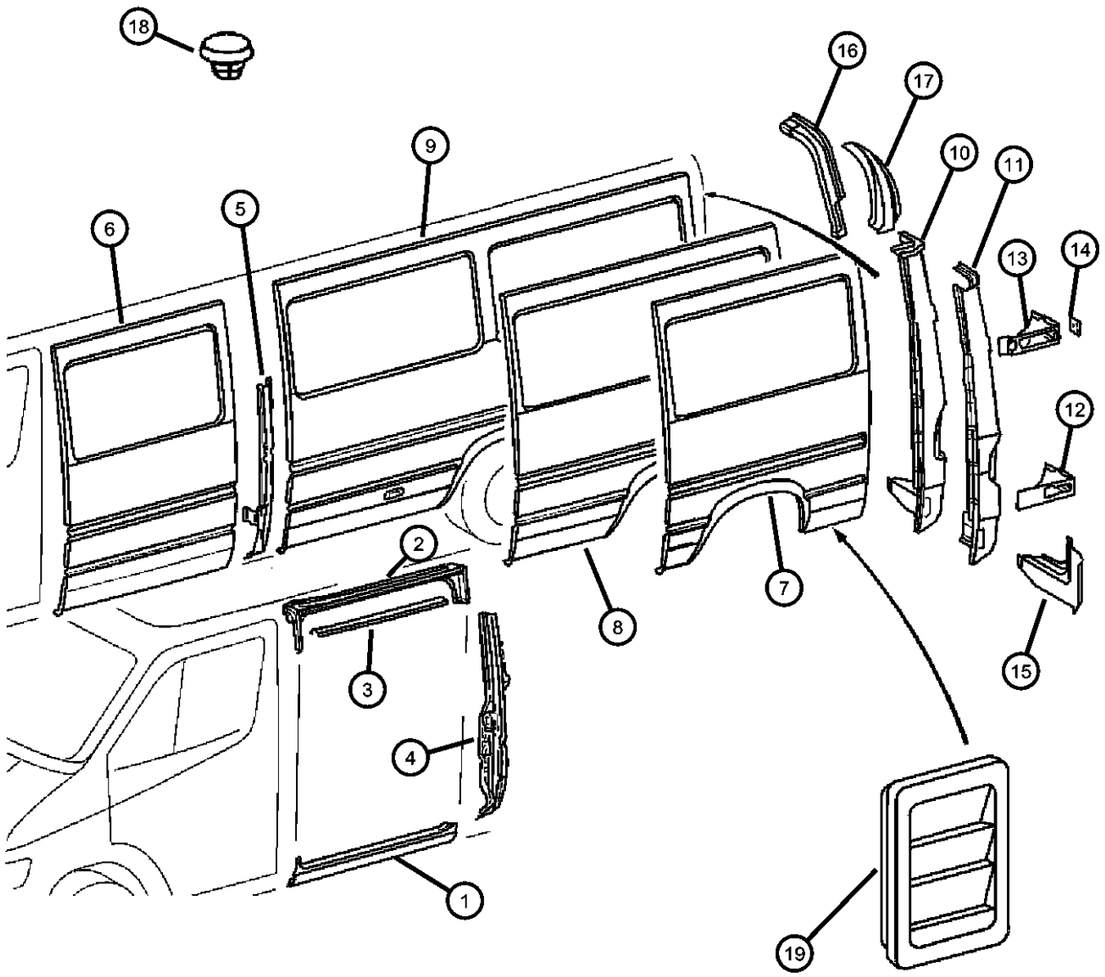

ITEM	PART NUMBER	QTY	LINE	SERIES	BODY	ENGINE	TRANS	TRIM	DESCRIPTION
	05104205AA	1	2, 6		11, 12, 14, 15, 16				
		1	3, 7		12, 15, 16				
7									PANEL, Body Side Rear, With 118 Inch Wheelbase
	05104212AA	1	2, 6		11, 12, 14, 15, 16				
		1	2, 6		51, 52, 54, 55, 56				
8									PANEL, Body Side Rear, With 140 Inch Wheelbase
	05121941AA	1	2, 6		11, 12, 14, 15, 16				
	05121990AA	1	3, 7		12, 15				
	05121948AA	1	2, 6		52, 55				
	05131158AA	1	2, 6		12, 15				With 16x6 Steel Wheels
	05131164AA	1	2, 6		52, 55				With 16x6 Steel Wheels
9									PANEL, Body Side Rear, With 158 Inch Wheelbase
	05104219AA	1	2, 6		16				
		1	2, 6		56				
	05121995AA	1	3, 7		16				
	05131170AA	1	2, 6		16				With 16x6 Steel Wheels
	05131176AA	1	2, 6		56				With 16x6 Steel Wheels
10									PANEL, D Pillar
	05104172AA	1	2, 6		11, 12, 14, 15, 16				Low Roof
		1	2, 6		51, 52, 54, 55, 56				Low Roof
		1	3, 7		12, 15, 16				Low Roof
	05104174AA	1	2, 6		11, 12, 14, 15, 16				High Roof
		1	2, 6		51, 52, 54, 55, 56				High Roof

SPRINTER (VA)

SERIES	LINE	BODY	ENGINE	TRANSMISSION
L = LOWLINE	3 = HD DODGE 2WD 6 = Lt. Duty DODGE 4WD 2 = Med. Duty DODGE 2WD 7 = Med. Duty DODGE 4WD	55 = Wagon 140" 54 = Wagon 118" 52 = Wagon 140" 51 = Wagon 118" 12 = Van 140" 11 = Van 118" 06 = Front Section 158" 14 = Van 118" 15 = Van 140" 16 = Van 158" 56 = Wagon 158" 01 = Chassis Forward Control 118" 02 = Chassis Forward Control 140"	EX8 = Engine-2.7L I5 Mercedes Turbo Diesel	DGJ = Transmission-5-Spd. Automatic,W5A580

Left Side Panels, Wagon
Figure SVA-960

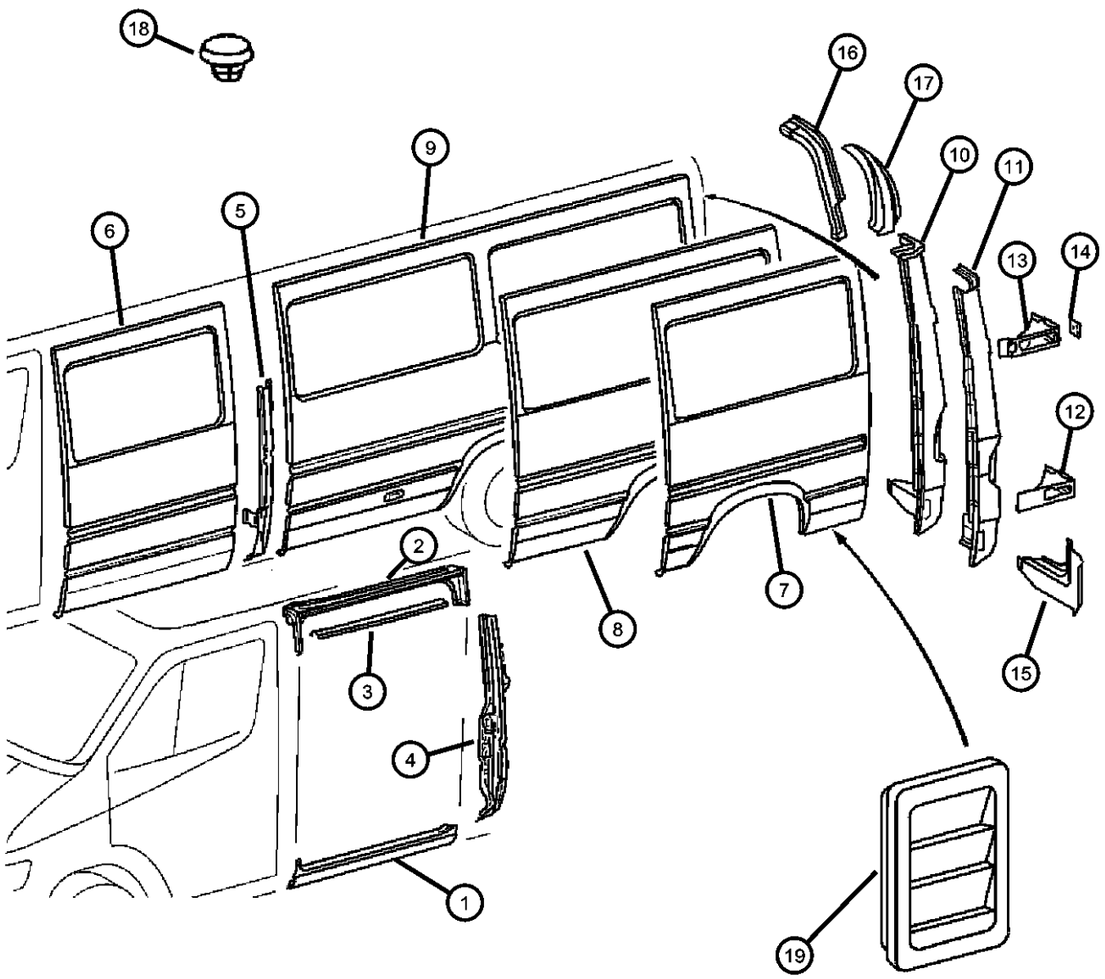

ITEM	PART NUMBER	QTY	LINE	SERIES	BODY	ENGINE	TRANS	TRIM	DESCRIPTION
		1	3, 7		12, 15, 16				High Roof
11									PANEL, D Pillar
	05104206AA	1	2, 6		11, 12, 14, 15, 16				
		1	2, 6		51, 52, 54, 55, 56				
		1	3, 7		12, 15, 16				
12									REINFORCEMENT, Rear door hinge
	05122031AA	1	2, 6		11, 12, 14, 15, 16				
		1	2, 6		51, 52, 54, 55, 56				
		1	3, 7		12, 15, 16				
13									REINFORCEMENT, Rear door hinge
	05122032AA	1	3, 7		12, 15, 16				
		1	2, 6		11, 12, 14, 15, 16				
		1	2, 6		51, 52, 54, 55, 56				
14									PLATE, Rear Door Hinge
	05104188AA	2	3, 7		12, 15, 16				
		2	2, 6		11, 12, 14, 15, 16				
		2	2, 6		51, 52, 54, 55, 56				
15									EXTENSION, D Pillar Lower
	05104207AA	1	2, 6		11, 12, 14, 15, 16				
		1	2, 6		51, 52, 54, 55, 56				
		1	3, 7		12, 15, 16				
16									EXTENSION, D Pillar Upper
	05121988AA	1	3, 7		12, 15, 16				

SPRINTER (VA)

SERIES	LINE	BODY	ENGINE	TRANSMISSION
L = LOWLINE	3 = HD DODGE 2WD 6 = Lt. Duty DODGE 4WD 2 = Med. Duty DODGE 2WD 7 = Med. Duty DODGE 4WD	55 = Wagon 140" 54 = Wagon 118" 52 = Wagon 140" 51 = Wagon 118" 12 = Van 140" 11 = Van 118" 06 = Front Section 158" 14 = Van 118" 15 = Van 140" 16 = Van 158" 56 = Wagon 158" 01 = Chassis Forward Control 118" 02 = Chassis Forward Control 140"	EX8 = Engine-2.7L I5 Mercedes Turbo Diesel	DGJ = Transmission-5-Spd. Automatic,W5A580

Left Side Panels, Wagon
Figure SVA-960

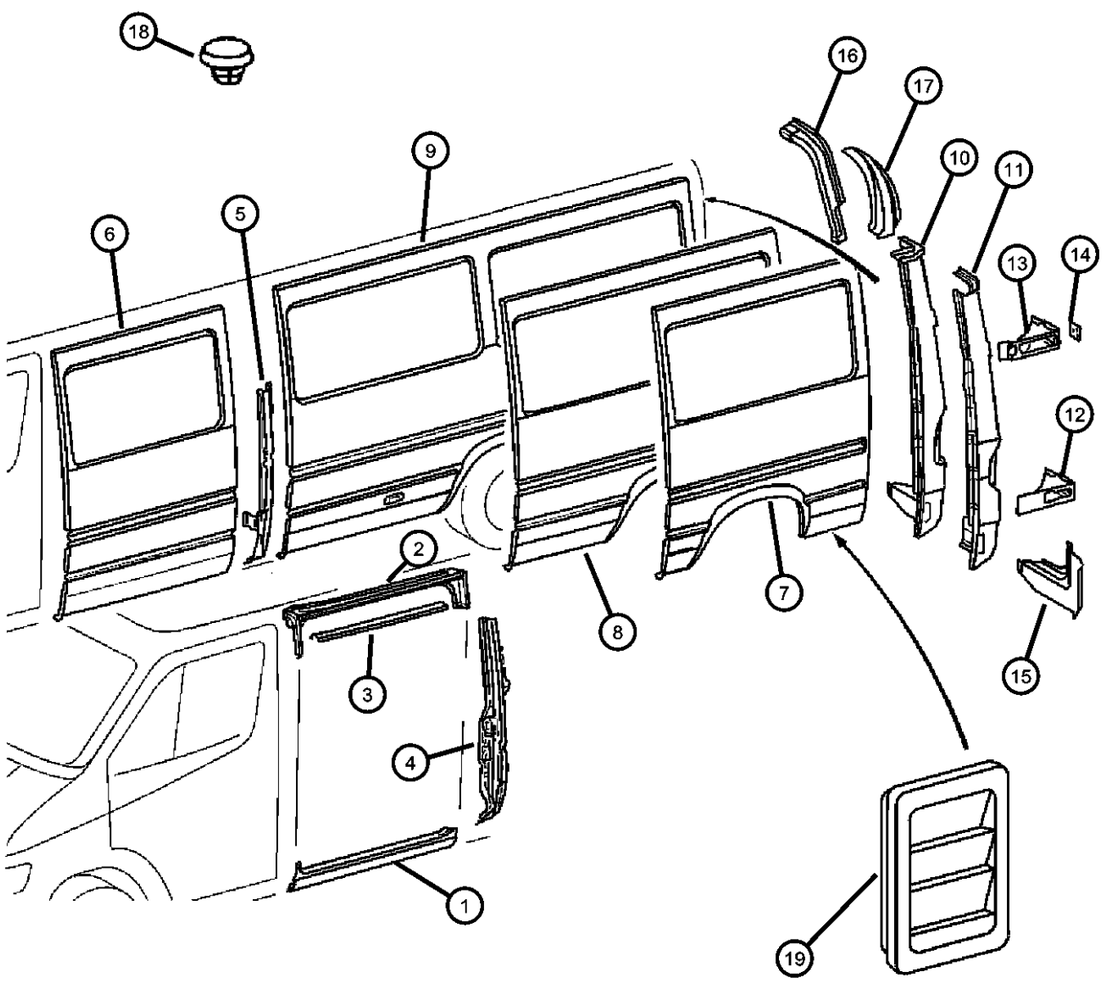

ITEM	PART NUMBER	QTY	LINE	SERIES	BODY	ENGINE	TRANS	TRIM	DESCRIPTION
		1	2, 6		11, 12, 14, 15, 16				
		1	2, 6		51, 52, 54, 55, 56				
17									PANEL, D Pillar Trim
	05122050AA	1	2, 6		11, 12, 14, 15, 16				
		1	2, 6		51, 52, 54, 55, 56				
		1	3, 7		12, 15, 16				
18									PLUG, Expansion
	05133657AA	1	3, 7		12, 15, 16				
		1	2, 6		11, 12, 14, 15, 16				
		1	2, 6		51, 52, 54, 55, 56				
19									EXHAUSTER, Quarter Panel
	05104472AA	2	2, 6		11, 12, 14, 15, 16				
		2	2, 6		51, 52, 54, 55, 56				
		2	3, 7		12, 15, 16				

SPRINTER (VA)

SERIES	LINE	BODY	ENGINE	TRANSMISSION
L = LOWLINE	3 = HD DODGE 2WD 6 = Lt. Duty DODGE 4WD 2 = Med. Duty DODGE 2WD 7 = Med. Duty DODGE 4WD	55 = Wagon 140" 54 = Wagon 118" 52 = Wagon 140" 51 = Wagon 118" 12 = Van 140" 11 = Van 118" 06 = Front Section 158" 14 = Van 118" 15 = Van 140" 16 = Van 158" 56 = Wagon 158" 01 = Chassis Forward Control 118" 02 = Chassis Forward Control 140"	EX8 = Engine-2.7L I5 Mercedes Turbo Diesel	DGJ = Transmission-5-Spd. Automatic,W5A580

AR = use ase required - = Non illustrrated part

Rear Splash Shield
Figure SVA-970

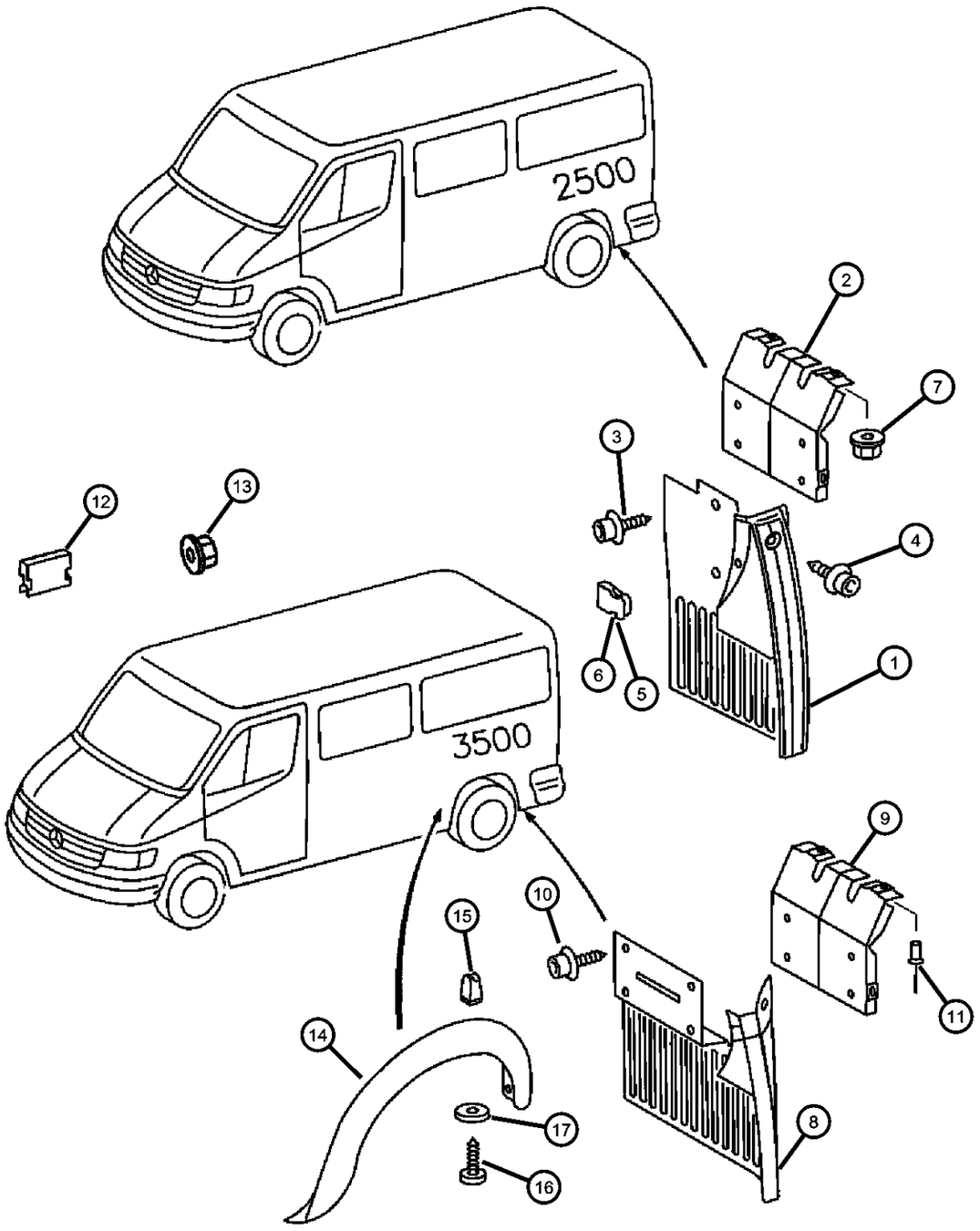

ITEM	PART NUMBER	QTY	LINE	SERIES	BODY	ENGINE	TRANS	TRIM	DESCRIPTION
1									GUARD, Splash
	05104518AA	1	2, 6		01, 02, 06				With 15 Inch Wheels, Left
		1	2, 6		11, 12, 14, 15, 16				With 15 Inch Wheels, Left
		1	2, 6		51, 52, 54, 55, 56				With 15 Inch Wheels, Left
	05104521AA	1	2, 6		01, 02, 06				With 15 Inch Wheels, Right
		1	2, 6		11, 12, 14, 15, 16				With 15 Inch Wheels, Right
		1	2, 6		51, 52, 54, 55, 56				With 15 Inch Wheels, Right
	05125152AA	1	3, 7		12, 15, 16				Left
	05125153AA	1	3, 7		12, 15, 16				Right
	05132505AA	1	2, 6		11, 12, 14, 15, 16				With 16x6 Steel Wheels, Left
		1	2, 6		51, 52, 54, 55, 56				With 16x6 Steel Wheels, Left
	05132507AA	1	2, 6		11, 12, 14, 15, 16				With 16x6 Steel Wheels, Right
		1	2, 6		51, 52, 54, 55, 56				With 16x6 Steel Wheels, Right
2									BRACKET
	05104520AA	1	2, 6		11, 12, 14, 15, 16				Left
		1	2, 6		51, 52, 54, 55, 56				Left
	05104522AA	1	2, 6		11, 12, 14, 15, 16				Right
		1	2, 6		51, 52, 54, 55, 56				Right
3									SCREW
	06104581AA	6	2, 6		11, 12, 14, 15, 16				
		6	2, 6		51, 52, 54, 55, 56				
		6	3, 7		12, 15, 16				
4	06104582AA	2							SCREW

SPRINTER (VA)

SERIES	LINE	BODY	ENGINE	TRANSMISSION
L = LOWLINE	3 = HD DODGE 2WD 6 = Lt. Duty DODGE 4WD 2 = Med. Duty DODGE 2WD 7 = Med. Duty DODGE 4WD	55 = Wagon 140" 54 = Wagon 118" 52 = Wagon 140" 51 = Wagon 118" 12 = Van 140" 11 = Van 118" 06 = Front Section 158" 14 = Van 118" 15 = Van 140" 16 = Van 158" 56 = Wagon 158" 01 = Chassis Forward Control 118" 02 = Chassis Forward Control 140"	EX8 = Engine-2.7L I5 Mercedes Turbo Diesel	DGJ = Transmission-5-Spd. Automatic,W5A580

AR = use ase required - = Non illustrrated part

Rear Splash Shield
Figure SVA-970

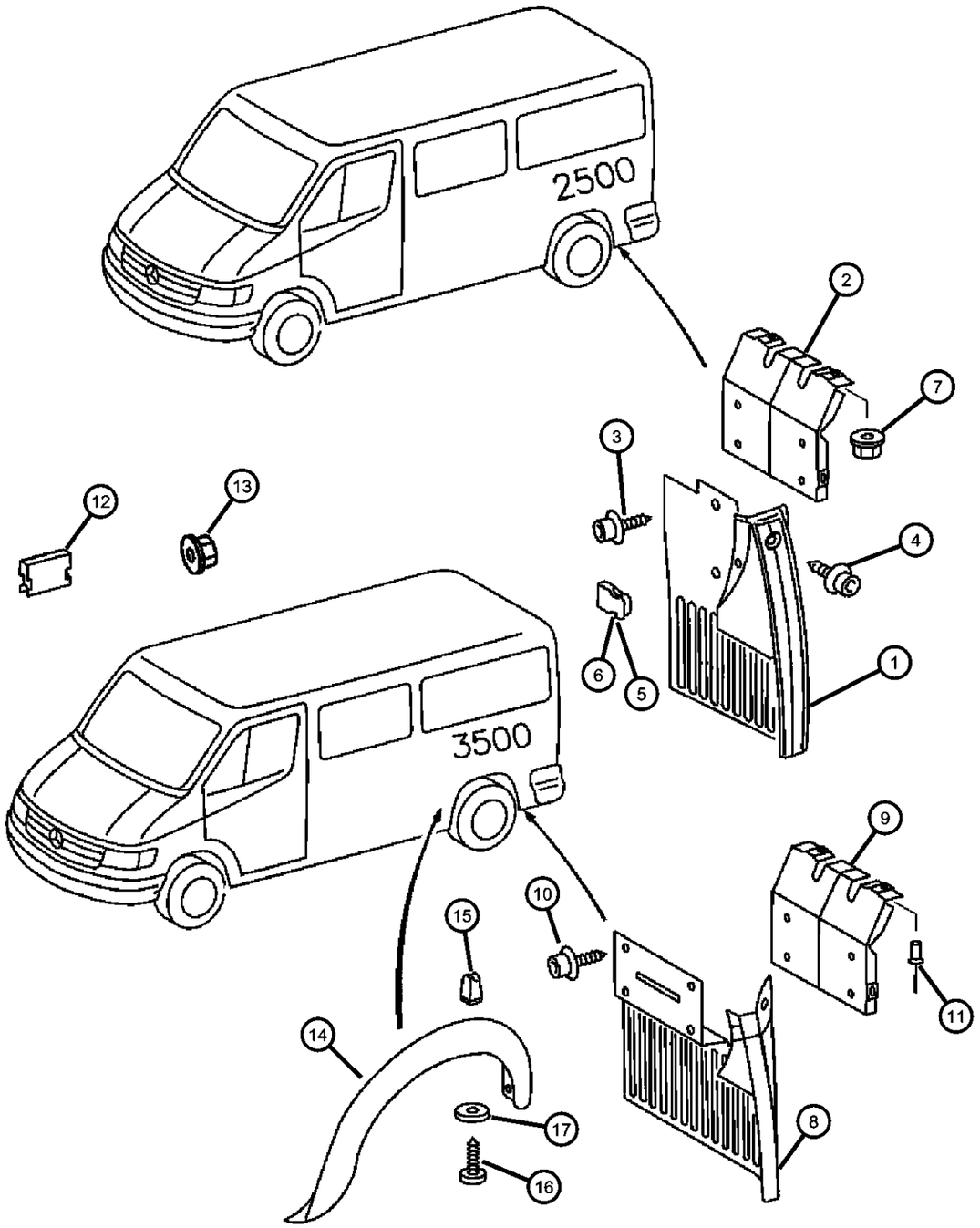

ITEM	PART NUMBER	QTY	LINE	SERIES	BODY	ENGINE	TRANS	TRIM	DESCRIPTION
5									CLIP
	05103875AA	2	2, 6		11, 12, 14, 15, 16				
		2	2, 6		51, 52, 54, 55, 56				
6									CLIP
	05132726AA	2	2, 6		11, 12, 14, 15, 16				
		2	2, 6		51, 52, 54, 55, 56				
7									NUT, Hex
	06104911AA	2	2, 6		11, 12, 14, 15, 16				
		2	2, 6		51, 52, 54, 55, 56				
		1	2, 6		01, 02, 06				
		2	3, 7		12, 15, 16				
8									GUARD, Splash
	05125152AA	1	3, 7		12, 15, 16				Left
	05125153AA	1	3, 7		12, 15, 16				Right
9	05125158AA	2	3, 7		12, 15, 16				BRACKETRight & Left
10	06104581AA	8	3, 7		12, 15, 16				SCREW
11	06104871AA	4	3, 7		12, 15, 16				RIVET
12	05125567AA	4	3, 7		12, 15, 16				CLIP
13	06104911AA	2	3, 7		12, 15, 16				NUT, Hex
14	05125142AA	2	3, 7		12, 15, 16				MOLDING, Wheel Opening Flare
15	05098837AA	16	3, 7		12, 15, 16				NUT, Plastic Snap-in
16	06104614AA	16	3, 7		12, 15, 16				SCREW
17	05104639AA	16	3, 7		12, 15, 16				WASHER

SPRINTER (VA)

SERIES	LINE	BODY	ENGINE	TRANSMISSION
L = LOWLINE	3 = HD DODGE 2WD 6 = Lt. Duty DODGE 4WD 2 = Med. Duty DODGE 2WD 7 = Med. Duty DODGE 4WD	55 = Wagon 140" 54 = Wagon 118" 52 = Wagon 140" 51 = Wagon 118" 12 = Van 140" 11 = Van 118" 06 = Front Section 158" 14 = Van 118" 15 = Van 140" 16 = Van 158" 56 = Wagon 158" 01 = Chassis Forward Control 118" 02 = Chassis Forward Control 140"	EX8 = Engine-2.7L I5 Mercedes Turbo Diesel	DGJ = Transmission-5-Spd. Automatic,W5A580

Rear Step Panel
Figure SVA-980

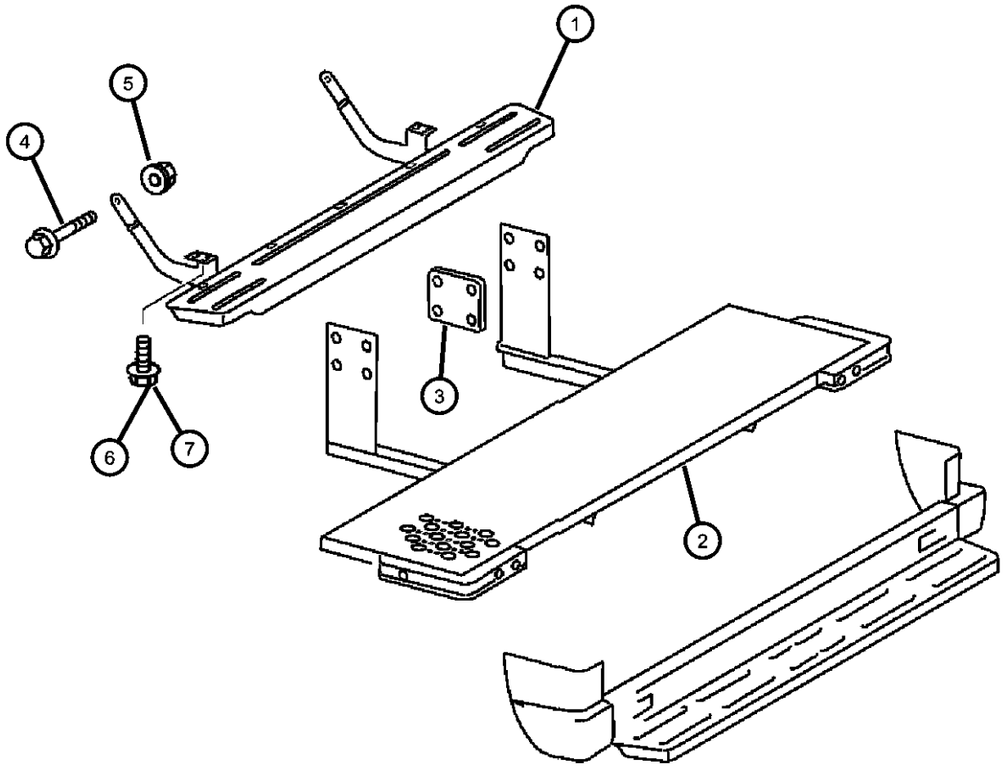

ITEM	PART NUMBER	QTY	LINE	SERIES	BODY	ENGINE	TRANS	TRIM	DESCRIPTION
1									BUMPER, Step
	05104132AA	1	2, 6		12, 15, 16				With 140 & 158 Inch Wheelbase
	05120038AA	1	3, 7		12, 15				With 140 Inch Wheelbase
		1	2, 6		52, 55, 56				With 140 & 158 Inch Wheelbase
	05104133AA	1	2, 6		11, 14				With 118 Inch Wheelbase
		1	2, 6		51, 54				With 118 Inch Wheelbase
	05120040AA	1	3, 7		16				With 158 Inch Wheelbase
2									BUMPER, Step
	05104135AA	1	2, 6		11, 12, 14, 15, 16				
		1	2, 6		51, 52, 54, 55, 56				
	05120038AA	1	3, 7		12, 15				
3									PLATE, Towing Mounting
	05104056AA	2	2, 6		51, 52, 54, 55, 56				
		2	3, 7		12, 15, 16				
		2	2, 6		11, 12, 14, 15, 16				
4									SCREW
	05104664AA	8	3, 7		12, 15, 16				
		8	2, 6		11, 12, 14, 15, 16				
		8	2, 6		51, 52, 54, 55, 56				
5									NUT
	06104718AA	8	2, 6		11, 12, 14, 15, 16				
		8	2, 6		51, 52, 54, 55, 56				
		8	3, 7		12, 15, 16				
6									BOLT, Hex Flange Head, M10x1.50x25

SPRINTER (VA)

SERIES	LINE	BODY	ENGINE	TRANSMISSION
L = LOWLINE	3 = HD DODGE 2WD 6 = Lt. Duty DODGE 4WD 2 = Med. Duty DODGE 2WD 7 = Med. Duty DODGE 4WD	55 = Wagon 140" 54 = Wagon 118" 52 = Wagon 140" 51 = Wagon 118" 12 = Van 140" 11 = Van 118" 06 = Front Section 158" 14 = Van 118" 15 = Van 140" 16 = Van 158" 56 = Wagon 158" 01 = Chassis Forward Control 118" 02 = Chassis Forward Control 140"	EX8 = Engine-2.7L I5 Mercedes Turbo Diesel	DGJ = Transmission-5-Spd. Automatic,W5A580

AR = use ase required - = Non illustrrated part

Rear Step Panel
Figure SVA-980

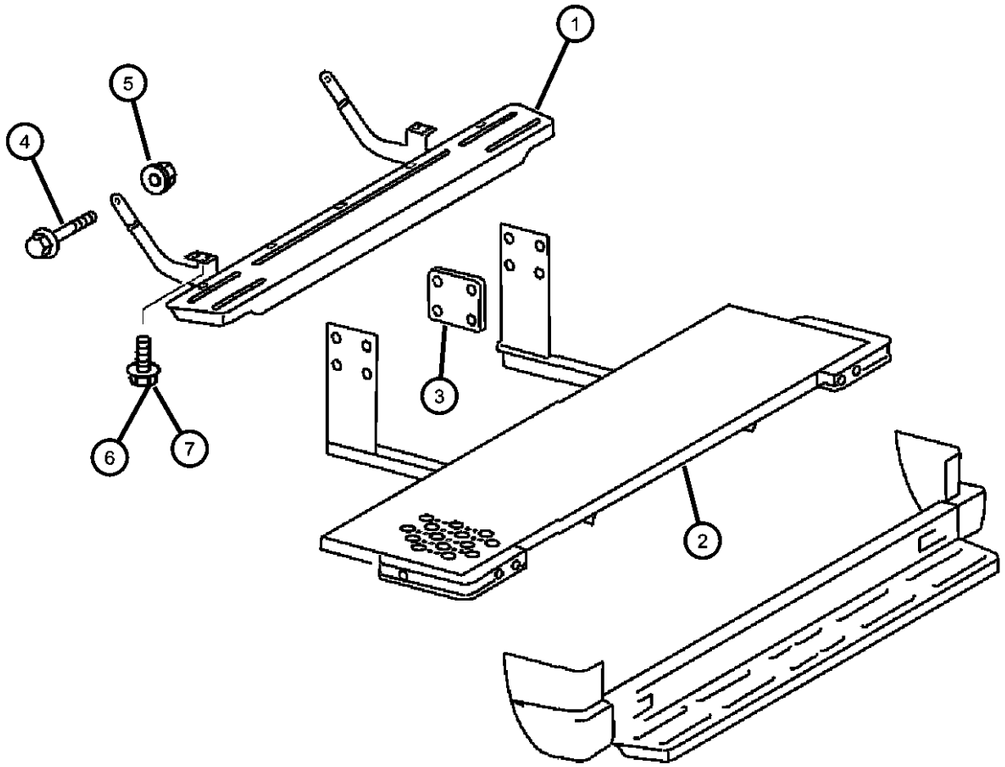

ITEM	PART NUMBER	QTY	LINE	SERIES	BODY	ENGINE	TRANS	TRIM	DESCRIPTION
	06104215AA	4	2, 6		11, 12, 14, 15, 16				Rocker Panel to Frame
		4	2, 6		51, 52, 54, 55, 56				Rocker Panel to Frame
		4	3, 7		12, 15, 16				Rocker Panel to Frame
7									SCREW
	05104666AA	4	2, 6		51, 52, 54, 55, 56				Step to Crossmember
		4	3, 7		12, 15, 16				Step to Crossmember
		4	2, 6		11, 12, 14, 15, 16				Step to Crossmember

SPRINTER (VA)

SERIES	LINE	BODY	ENGINE	TRANSMISSION
L = LOWLINE	3 = HD DODGE 2WD 6 = Lt. Duty DODGE 4WD 2 = Med. Duty DODGE 2WD 7 = Med. Duty DODGE 4WD	55 = Wagon 140" 54 = Wagon 118" 52 = Wagon 140" 51 = Wagon 118" 12 = Van 140" 11 = Van 118" 06 = Front Section 158" 14 = Van 118" 15 = Van 140" 16 = Van 158" 56 = Wagon 158" 01 = Chassis Forward Control 118" 02 = Chassis Forward Control 140"	EX8 = Engine-2.7L I5 Mercedes Turbo Diesel	DGJ = Transmission-5-Spd. Automatic,W5A580

AR = use ase required - = Non illustrrated part

Partition Wall & Load Protection Grill
Figure SVA-990

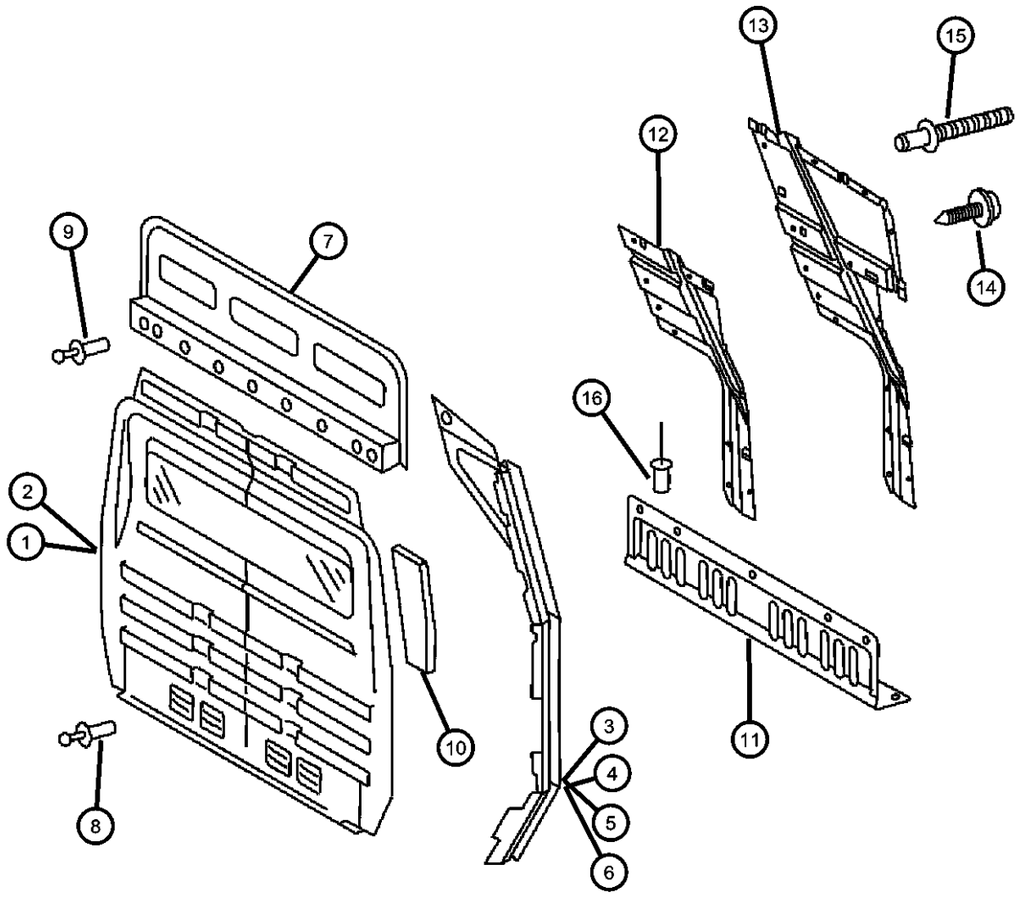

ITEM	PART NUMBER	QTY	LINE	SERIES	BODY	ENGINE	TRANS	TRIM	DESCRIPTION
1									PANEL, Cargo Compartment, Without Windows
	05104304AA	1	2, 6		11, 12, 14, 15, 16				
		1	3, 7		12, 15, 16				
2									PANEL, Cargo Compartment, With Windows
	05104307AA	1	2, 6		11, 12, 14, 15, 16				
		1	3, 7		12, 15, 16				
3									PANEL EXTENSION, Extension, W/O Slide
	05104310AA	1	2, 6		11, 12, 14, 15, 16				Left
		1	3, 7		12, 15, 16				Left
4									PANEL EXTENSION, Extension, W/ Slide
	05104311AA	1	2, 6		11, 12, 14, 15, 16				Left
		1	3, 7		12, 15, 16				Left
5									PANEL EXTENSION, Extension, W/O Slide
	05123641AA	1	2, 6		11, 12, 14, 15, 16				Right
		1	3, 7		12, 15, 16				Right
6									PANEL EXTENSION, Extension, W/ Slide
	05104312AA	1	2, 6		11, 12, 14, 15, 16				Right
		1	3, 7		12, 15, 16				Right
7									PANEL, Cargo Compartment, Upper
	05104308AA	1	3, 7		12, 15, 16				
		1	2, 6		11, 12, 14, 15, 16				
8									RIVET

SPRINTER (VA)

SERIES	LINE	BODY	ENGINE	TRANSMISSION
L = LOWLINE	3 = HD DODGE 2WD 6 = Lt. Duty DODGE 4WD 2 = Med. Duty DODGE 2WD 7 = Med. Duty DODGE 4WD	55 = Wagon 140" 54 = Wagon 118" 52 = Wagon 140" 51 = Wagon 118" 12 = Van 140" 11 = Van 118" 06 = Front Section 158" 14 = Van 118" 15 = Van 140" 16 = Van 158" 56 = Wagon 158" 01 = Chassis Forward Control 118" 02 = Chassis Forward Control 140"	EX8 = Engine-2.7L I5 Mercedes Turbo Diesel	DGJ = Transmission-5-Spd. Automatic,W5A580

Partition Wall & Load Protection Grill
Figure SVA-990

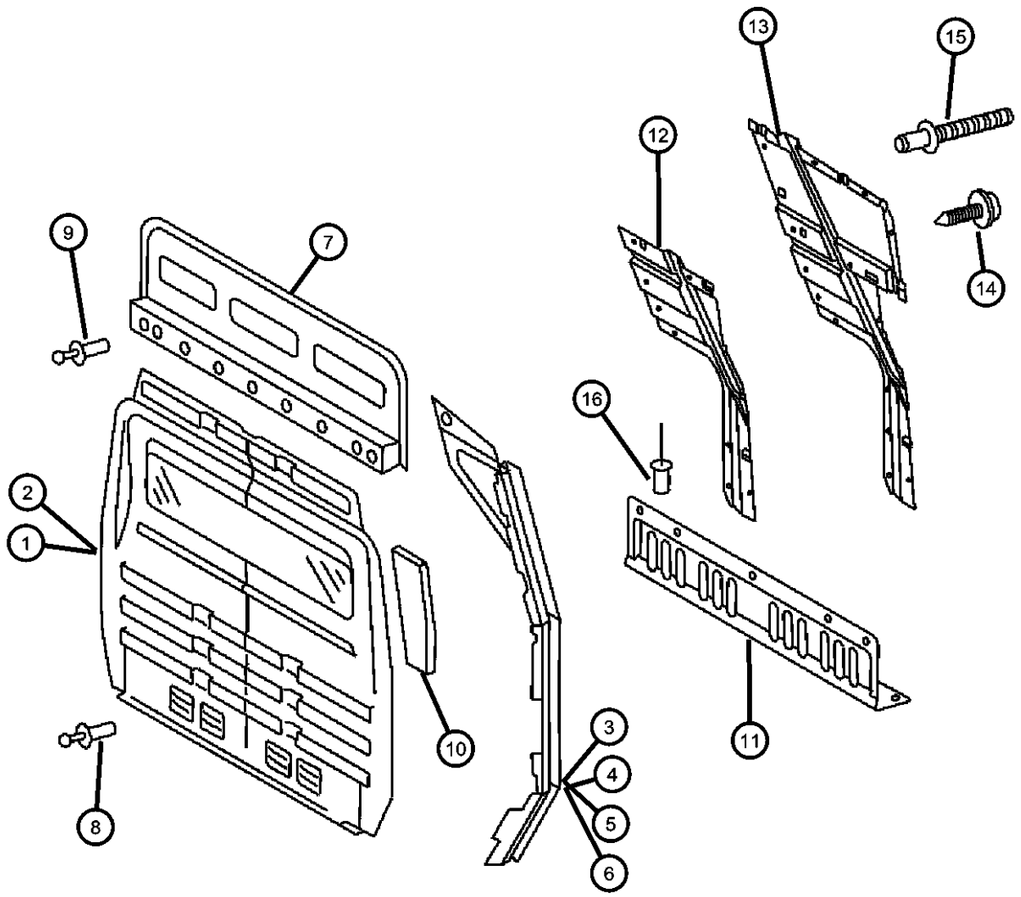

ITEM	PART NUMBER	QTY	LINE	SERIES	BODY	ENGINE	TRANS	TRIM	DESCRIPTION
	05103839AA	16	2, 6		11, 12, 14, 15, 16				
		16	3, 7		12, 15, 16				
9									RIVET
	05103838AA	12	2, 6		11, 12, 14, 15, 16				
		12	3, 7		12, 15, 16				
10									PAD, Isolator
	05103712AA	2	2, 6		11, 12, 14, 15, 16				10 Meters Long
		2	3, 7		12, 15, 16				10 Meters Long
11	05123631AA	1	3, 7		12, 15, 16				REINFORCEMENT, Cab Back
12	05104313AA	1							REINFORCEMENT, Side PanelLeft
13	05104314AA	1							REINFORCEMENT, Side PanelRight
14	06104580AA	2	3, 7		12, 15, 16				SCREW, Tapping
15	05103838AA	16	3, 7		12, 15, 16				RIVET
16	05125822AA	10	3, 7		12, 15, 16				RIVET, Blind Bulb

SPRINTER (VA)

SERIES	LINE	BODY	ENGINE	TRANSMISSION
L = LOWLINE	3 = HD DODGE 2WD 6 = Lt. Duty DODGE 4WD 2 = Med. Duty DODGE 2WD 7 = Med. Duty DODGE 4WD	55 = Wagon 140" 54 = Wagon 118" 52 = Wagon 140" 51 = Wagon 118" 12 = Van 140" 11 = Van 118" 06 = Front Section 158" 14 = Van 118" 15 = Van 140" 16 = Van 158" 56 = Wagon 158" 01 = Chassis Forward Control 118" 02 = Chassis Forward Control 140"	EX8 = Engine-2.7L I5 Mercedes Turbo Diesel	DGJ = Transmission-5-Spd. Automatic,W5A580

AR = use ase required - = Non illustrrated part

Low Roof Panel
Figure SVA-1110

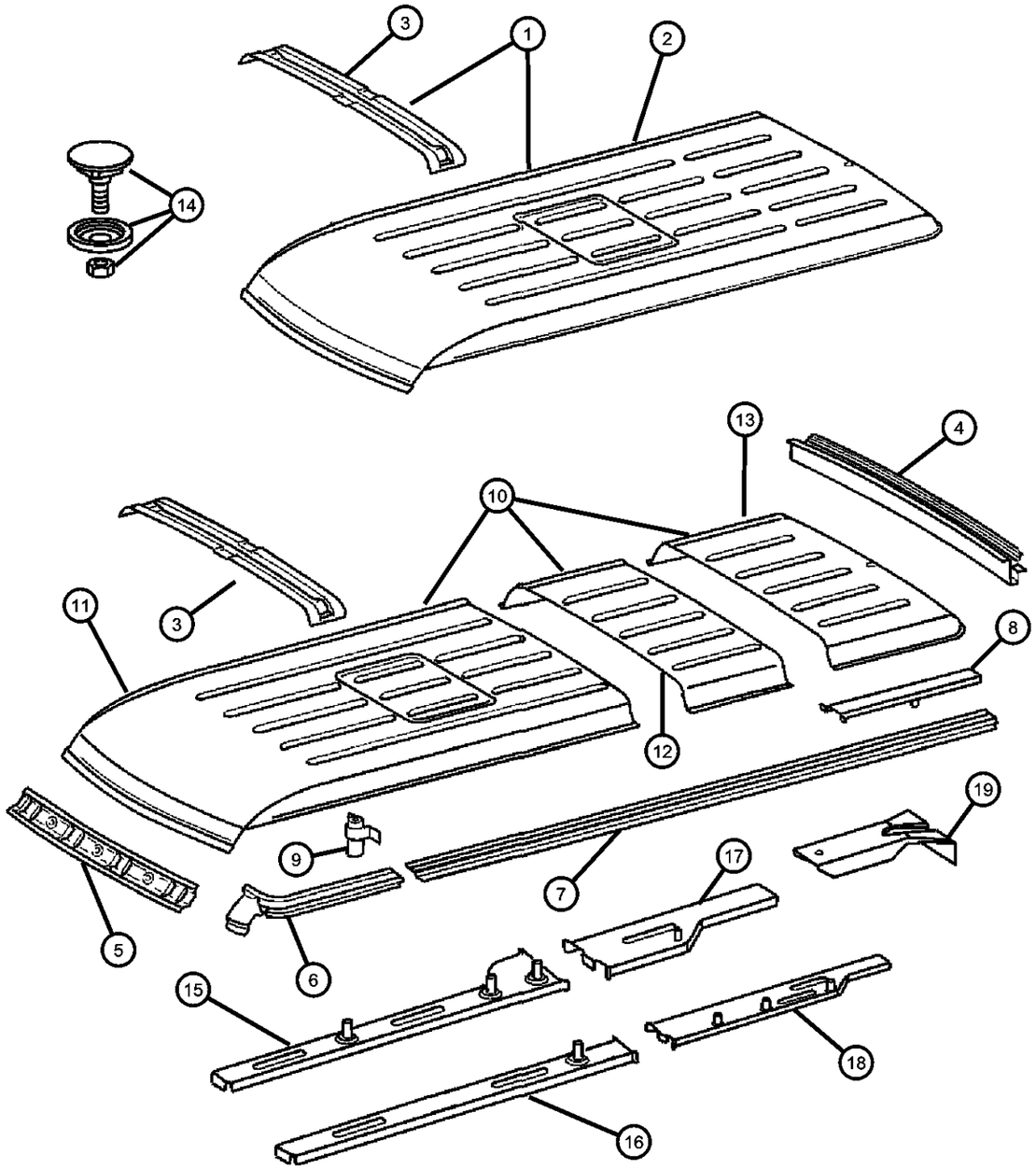

ITEM	PART NUMBER	QTY	LINE	SERIES	BODY	ENGINE	TRANS	TRIM	DESCRIPTION
1									ROOF
	05134039AA	1	2, 6		11, 14				[118] Inch Wheel Base
		1	2, 6		51, 54				[118] Inch Wheel Base
2									PANEL, Roof
	05122155AA	1	2, 6		51, 54				[118] Inch Wheel Base
		1	2, 6		11, 14				[118] Inch Wheel Base
3									BOW, Roof
	05122107AA	4	2, 6		12, 15				
		3	2, 6		51, 54				
		3	2, 6		11, 14				
		4	2, 6		52, 55				
		4	3, 7		15, 12				
4									RAIL, Roof
	05122058AA	1	3, 7		12, 15, 16				
		1	2, 6		11, 12, 14, 15, 16				
		1	2, 6		51, 52, 54, 55, 56				
5									SUPPORT, Roof
	05104163AA	1	2, 6		11, 12, 14, 15, 16				
		1	2, 6		51, 52, 54, 55, 56				
		1	3, 7		12, 15, 16				
6									RAIL, Roof Side
	05104194AA	1	2, 6		11, 12, 14, 15, 16				Left
		1	2, 6		51, 52, 54, 55, 56				Left
	05104196AA	1	2, 6		11, 12, 14, 15, 16				Right
		1	2, 6		55, 56, 51, 52, 54				Right

SPRINTER (VA)

SERIES	LINE	BODY	ENGINE	TRANSMISSION
L = LOWLINE	3 = HD DODGE 2WD 6 = Lt. Duty DODGE 4WD 2 = Med. Duty DODGE 2WD 7 = Med. Duty DODGE 4WD	55 = Wagon 140" 54 = Wagon 118" 52 = Wagon 140" 51 = Wagon 118" 12 = Van 140" 11 = Van 118" 06 = Front Section 158" 14 = Van 118" 15 = Van 140" 16 = Van 158" 56 = Wagon 158" 01 = Chassis Forward Control 118" 02 = Chassis Forward Control 140"	EX8 = Engine-2.7L I5 Mercedes Turbo Diesel	DGJ = Transmission-5-Spd. Automatic,W5A580

Low Roof Panel
Figure SVA-1110

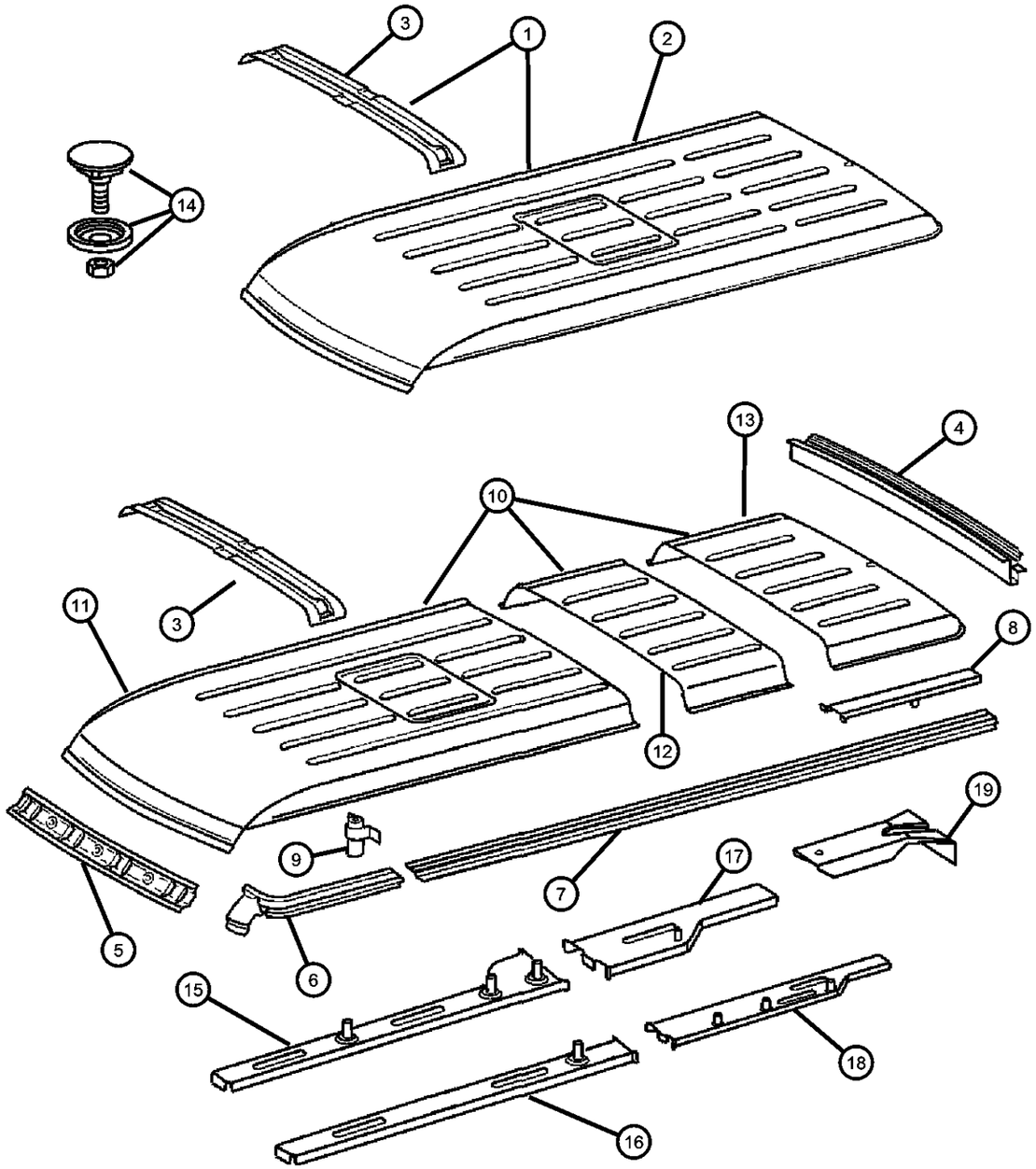

ITEM	PART NUMBER	QTY	LINE	SERIES	BODY	ENGINE	TRANS	TRIM	DESCRIPTION
7									RAIL, Roof Side
	05104191AA	1	2, 6		16				[158] Inch Wheel Base, Right & Left
		1	3, 7		16				[158] Inch Wheel Base, Right & Left
	05121826AA	1	2, 6		11, 14				[118] Inch Wheel Base, Right & Left
		1	2, 6		51, 54				[118] Inch Wheel Base, Right & Left
	05121827AA	1	2, 6		12, 15				[140] Inch Wheel Base, Right & Left
		1	2, 6		52, 55				[140] Inch Wheel Base, Right & Left
		1	3, 7		12, 15				[140] Inch Wheel Base, Right & Left
		1	2, 6		56				[158] Inch Wheel Base, Right & Left
8									REINFORCEMENT, Roof Panel
	05131214AA	2	2, 6		12, 15				[140] Inch Wheel Base
		2	2, 6		52, 55				[140] Inch Wheel Base
9									REINFORCEMENT, Roof Panel
	05131213AA	2	2, 6		12, 15				[140] Inch Wheel Base
		2	2, 6		52, 55				[140] Inch Wheel Base
10									ROOF
	05134036AA	1	2, 6		12, 15				[140] Inch Wheel Base
		1	2, 6		52, 55				[140] Inch Wheel Base
		1	3, 7		12, 15				[140] Inch Wheel Base
11									PANEL, Roof
	05122156AA	1	2, 6		12, 15				[140] Inch Wheel Base
		1	2, 6		52, 55				[140] Inch Wheel Base
		1	3, 7		12, 15				[140] Inch Wheel Base
12									PANEL, Roof

SPRINTER (VA)

SERIES	LINE	BODY	ENGINE	TRANSMISSION
L = LOWLINE	3 = HD DODGE 2WD 6 = Lt. Duty DODGE 4WD 2 = Med. Duty DODGE 2WD 7 = Med. Duty DODGE 4WD	55 = Wagon 140" 54 = Wagon 118" 52 = Wagon 140" 51 = Wagon 118" 12 = Van 140" 11 = Van 118" 06 = Front Section 158" 14 = Van 118" 15 = Van 140" 16 = Van 158" 56 = Wagon 158" 01 = Chassis Forward Control 118" 02 = Chassis Forward Control 140"	EX8 = Engine-2.7L I5 Mercedes Turbo Diesel	DGJ = Transmission-5-Spd. Automatic,W5A580

AR = use ase required - = Non illustrrated part

Low Roof Panel
Figure SVA-1110

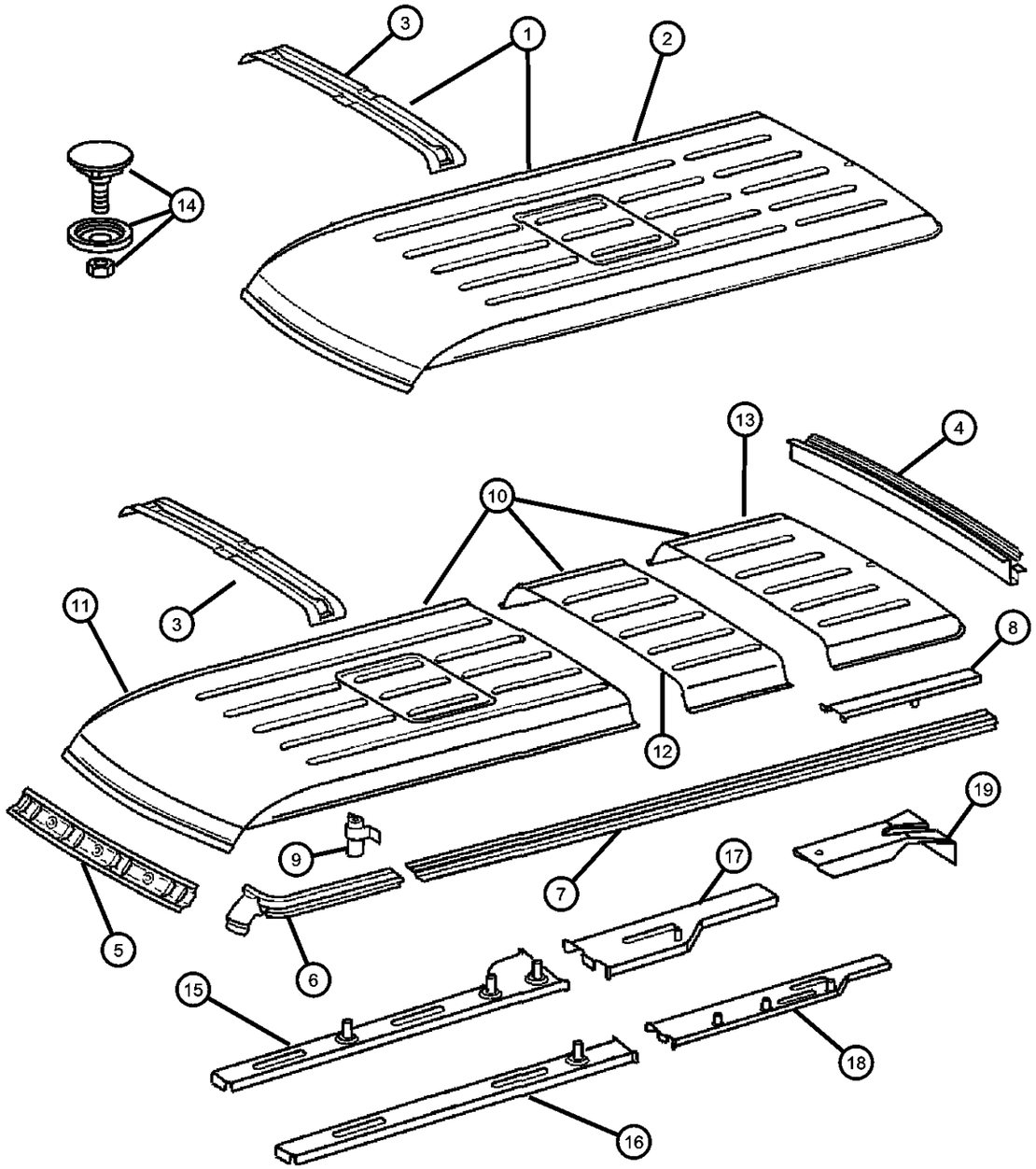

ITEM	PART NUMBER	QTY	LINE	SERIES	BODY	ENGINE	TRANS	TRIM	DESCRIPTION
	05122133AA	1	2, 6		12, 15				[140] Inch Wheel Base
		1	2, 6		52, 55				[140] Inch Wheel Base
		1	3, 7		12, 15				[140] Inch Wheel Base
13									PANEL, Roof
	05122134AA	1	2, 6		12, 15				[140] Inch Wheel Base
		1	2, 6		52, 55				[140] Inch Wheel Base
		1	3, 7		12, 15				[140] Inch Wheel Base
14									PANEL, For Sealing Antenna
	05124422AA	1	2, 6		11, 12, 14, 15, 16				
		1	2, 6		56, 51, 52, 54, 55				
		1	3, 7		12, 15, 16				
15									BRACKET, Roof
	05122083AA	1	2, 6		52, 55				Right
		1	3, 7		12, 15				Right
	05122081AA	1	2, 6		12, 15				Left
		1	2, 6		52, 55				Left
		1	3, 7		12, 15				Left
		1	2, 6		12, 15				Right
16									BRACKET, Roof, Front Right
	05122090AA	1	2, 6		16				
		1	2, 6		56				
		1	3, 7		16				
17									BRACKET, Roof
	05122084AA	1	2, 6		12, 15				Left
		1	2, 6		52, 55				Left
		1	3, 7		12, 15				Left
	05122085AA	1	2, 6		12, 15				Right

SPRINTER (VA)

SERIES	LINE	BODY	ENGINE	TRANSMISSION
L = LOWLINE	3 = HD DODGE 2WD 6 = Lt. Duty DODGE 4WD 2 = Med. Duty DODGE 2WD 7 = Med. Duty DODGE 4WD	55 = Wagon 140" 54 = Wagon 118" 52 = Wagon 140" 51 = Wagon 118" 12 = Van 140" 11 = Van 118" 06 = Front Section 158" 14 = Van 118" 15 = Van 140" 16 = Van 158" 56 = Wagon 158" 01 = Chassis Forward Control 118" 02 = Chassis Forward Control 140"	EX8 = Engine-2.7L I5 Mercedes Turbo Diesel	DGJ = Transmission-5-Spd. Automatic,W5A580

Low Roof Panel
Figure SVA-1110

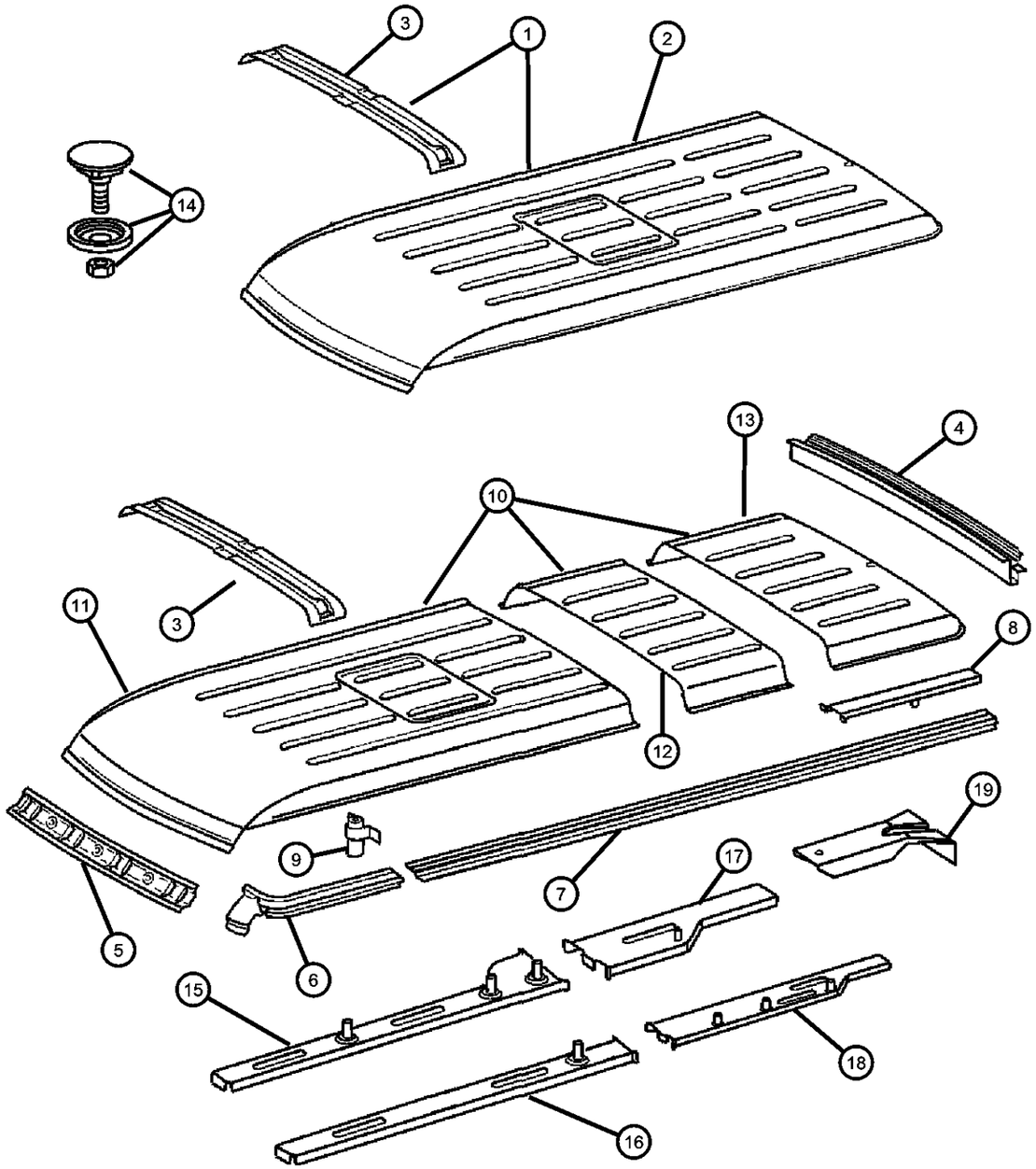

ITEM	PART NUMBER	QTY	LINE	SERIES	BODY	ENGINE	TRANS	TRIM	DESCRIPTION
		1	2, 6		52, 55				Right
		1	3, 7		12, 15				Right
18									BRACKET, Roof
	05122092AA	1	2, 6		16				Left
		1	2, 6		56				Left
		1	3, 7		16				Left
	05122093AA	1	2, 6		16				Right
		1	2, 6		56				Right
		1	3, 7		16				Right
19									REINFORCEMENT, Roof Panel
	05122125AA	2	2, 6		11, 12, 14, 15, 16				
		2	2, 6		51, 52, 54, 55, 56				
		2	3, 7		12, 15, 16				

SPRINTER (VA)

SERIES	LINE	BODY	ENGINE	TRANSMISSION
L = LOWLINE	3 = HD DODGE 2WD 6 = Lt. Duty DODGE 4WD 2 = Med. Duty DODGE 2WD 7 = Med. Duty DODGE 4WD	55 = Wagon 140" 54 = Wagon 118" 52 = Wagon 140" 51 = Wagon 118" 12 = Van 140" 11 = Van 118" 06 = Front Section 158" 14 = Van 118" 15 = Van 140" 16 = Van 158" 56 = Wagon 158" 01 = Chassis Forward Control 118" 02 = Chassis Forward Control 140"	EX8 = Engine-2.7L I5 Mercedes Turbo Diesel	DGJ = Transmission-5-Spd. Automatic,W5A580

AR = use ase required - = Non illustrrated part

High Roof Panel
Figure SVA-1120

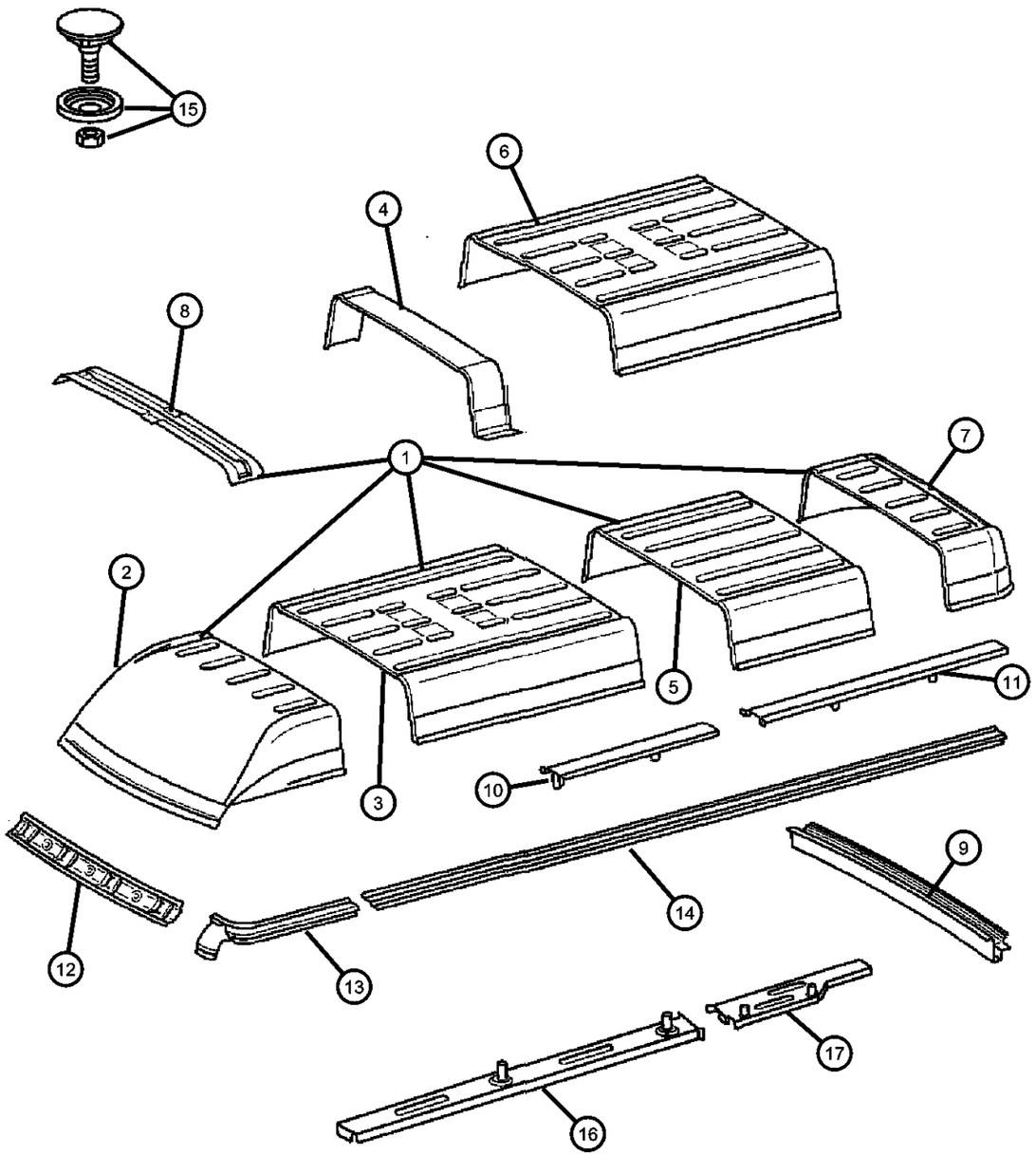

ITEM	PART NUMBER	QTY	LINE	SERIES	BODY	ENGINE	TRANS	TRIM	DESCRIPTION
1									ROOF
	05104228AA	1	2, 6		12, 15				140 Inch Wheel Base
		1	2, 6		52, 55				140 Inch Wheel Base
		1	3, 7		12, 15				140 Inch Wheel Base
	05134037AA	1	2, 6		16				158 Inch Wheel Base
		1	2, 6		56				158 Inch Wheel Base
		1	3, 7		16				158 Inch Wheel Base
	05134038AA	1	2, 6		11, 14				118 Inch Wheel Base
		1	2, 6		54, 51				118 Inch Wheel Base
2									PANEL, Roof
	05104233AA	1	2, 6		11, 12, 14, 15, 16				
		1	3, 7		12, 15, 16				
		1	2, 6		51, 52, 54, 55, 56				
3									PANEL, Roof
	05122143AA	1	2, 6		11, 12, 14, 15, 16				
		1	2, 6		51, 52, 54, 55, 56				
		1	3, 7		12, 15, 16				
4									EXTENSION, Roof Bow
	05131242AA	1	2, 6		11, 14				
		1	2, 6		51, 54				
5									PANEL, Roof
	05122144AA	1	2, 6		12, 15				140 Inch Wheel Base
		1	2, 6		52, 55				140 Inch Wheel Base
		1	3, 7		12, 15				140 Inch Wheel Base
6									PANEL, Roof
	05104232AA	1	2, 6		11, 12, 14, 15, 16				158 Inch Wheel Base, With Electric Fan

SPRINTER (VA)

SERIES	LINE	BODY	ENGINE	TRANSMISSION
L = LOWLINE	3 = HD DODGE 2WD 6 = Lt. Duty DODGE 4WD 2 = Med. Duty DODGE 2WD 7 = Med. Duty DODGE 4WD	55 = Wagon 140" 54 = Wagon 118" 52 = Wagon 140" 51 = Wagon 118" 12 = Van 140" 11 = Van 118" 06 = Front Section 158" 14 = Van 118" 15 = Van 140" 16 = Van 158" 56 = Wagon 158" 01 = Chassis Forward Control 118" 02 = Chassis Forward Control 140"	EX8 = Engine-2.7L I5 Mercedes Turbo Diesel	DGJ = Transmission-5-Spd. Automatic,W5A580

AR = use ase required - = Non illustrrated part

High Roof Panel
Figure SVA-1120

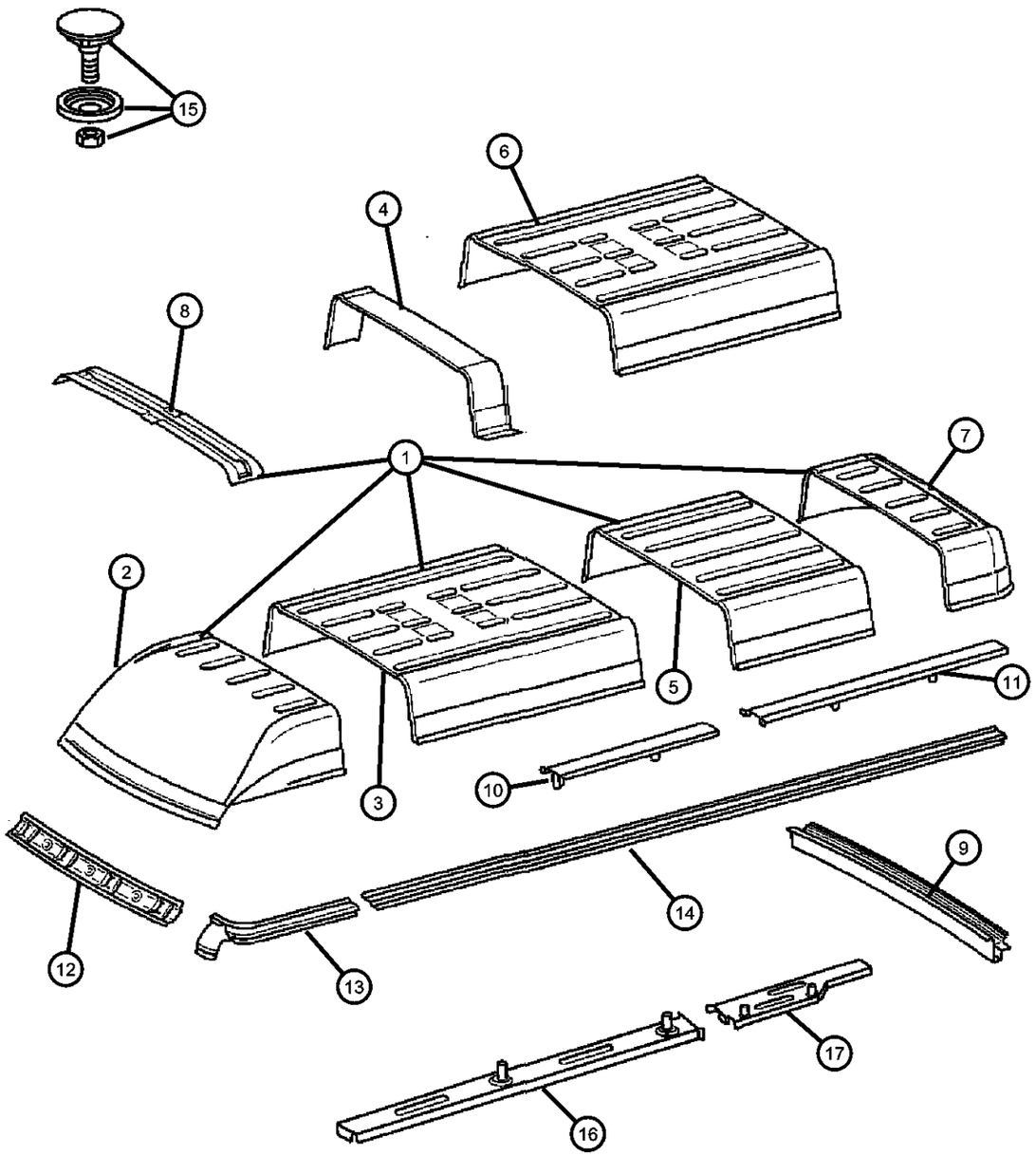

ITEM	PART NUMBER	QTY	LINE	SERIES	BODY	ENGINE	TRANS	TRIM	DESCRIPTION
	05122143AA	1	3, 7		15, 16, 12				140 & 158 Inch Wheel Base
		1	3, 7		12, 15, 16				158 Inch Wheel Base, With Electric Fan
		1	2, 6		11, 12, 14, 15, 16				140 & 158 Inch Wheel Base
		1	2, 6		51, 52, 54, 55, 56				140 & 158 Inch Wheel Base
7									PANEL, Roof
	05104231AA	1	2, 6		12, 15, 16				
		1	2, 6		52, 55, 56				
		1	3, 7		12, 15, 16				
8									BOW, Roof
	05104227AA	1	2, 6		11, 12, 14, 15, 16				With 140 & 158 Inch Wheelbase
		1	3, 7		12, 15, 16				With 140 & 158 Inch Wheelbase
	05104229AA	2	2, 6		11, 14				With Electric Fan
		3	2, 6		12, 15				With Electric Fan
		4	2, 6		16				With Electric Fan
		2	2, 6		51, 54				With Electric Fan
		3	2, 6		52, 55				With Electric Fan
		4	2, 6		56				With Electric Fan
		3	3, 7		12, 15				With Electric Fan
		4	3, 7		16				With Electric Fan
	05122107AA	3	2, 6		11, 14				With 118 Inch Wheelbase
		1	2, 6		51, 52, 54, 55, 56				With 140 & 158 Inch Wheelbase
		4	2, 6		52, 55				With 118 Inch Wheelbase
		4	3, 7		12, 15				With 118 Inch Wheelbase
		4	2, 6		12, 15				With 118 Inch Wheelbase
		3	2, 6		51, 54				With 118 Inch Wheelbase
9									BOW, Roof

SPRINTER (VA)

SERIES	LINE	BODY	ENGINE	TRANSMISSION
L = LOWLINE	3 = HD DODGE 2WD 6 = Lt. Duty DODGE 4WD 2 = Med. Duty DODGE 2WD 7 = Med. Duty DODGE 4WD	55 = Wagon 140" 54 = Wagon 118" 52 = Wagon 140" 51 = Wagon 118" 12 = Van 140" 11 = Van 118" 06 = Front Section 158" 14 = Van 118" 15 = Van 140" 16 = Van 158" 56 = Wagon 158" 01 = Chassis Forward Control 118" 02 = Chassis Forward Control 140"	EX8 = Engine-2.7L I5 Mercedes Turbo Diesel	DGJ = Transmission-5-Spd. Automatic,W5A580

AR = use ase required - = Non illustrrated part

High Roof Panel
Figure SVA-1120

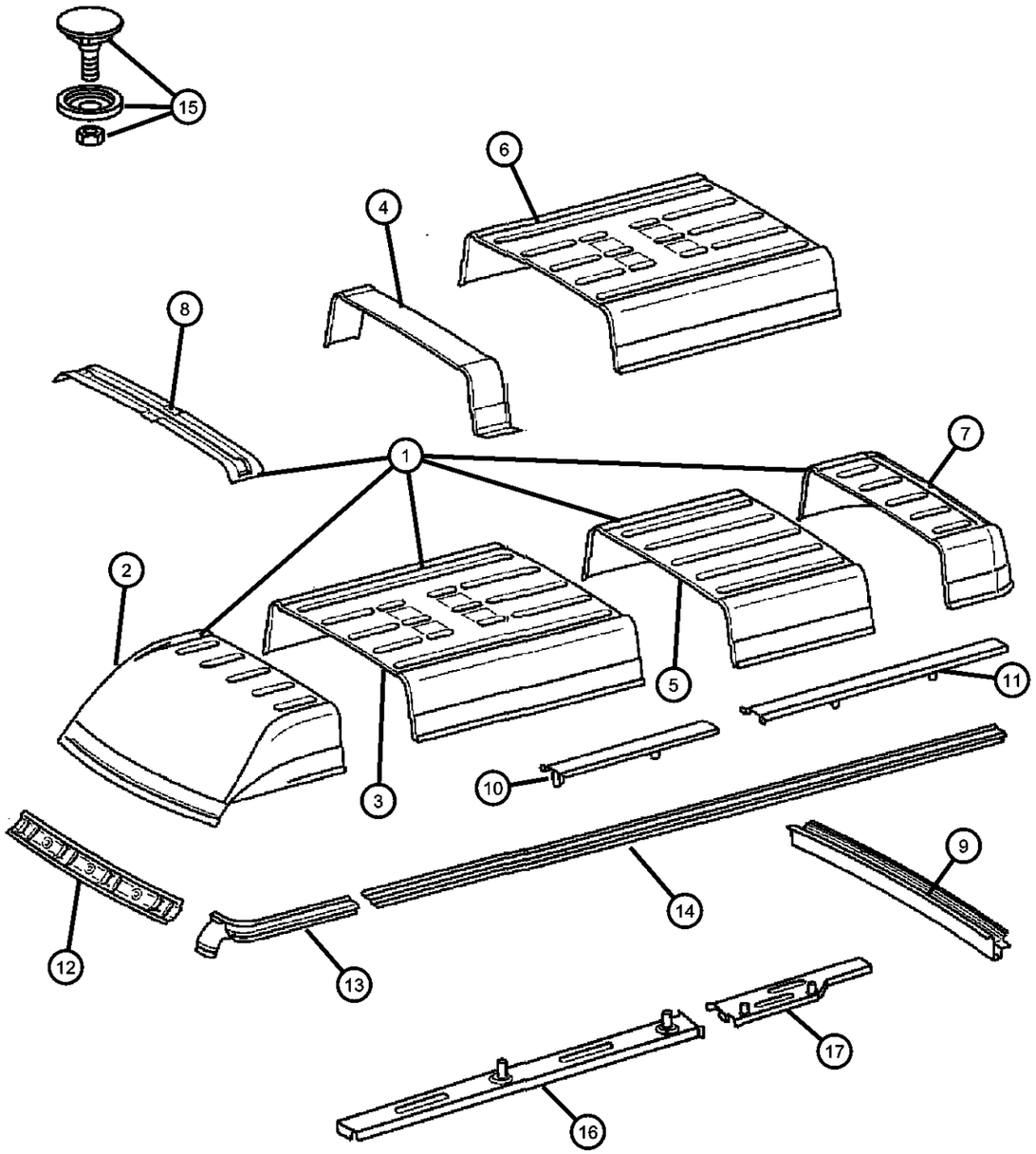

ITEM	PART NUMBER	QTY	LINE	SERIES	BODY	ENGINE	TRANS	TRIM	DESCRIPTION
	05104226AA	1	2, 6		11, 12, 14, 15, 16				
		1	3, 7		12, 15, 16				
10									REINFORCEMENT, Roof Panel
	05131215AA	2	2, 6		15, 12				
		2	2, 6		52, 55				
11									REINFORCEMENT, Roof Panel
	05131216AA	2	2, 6		16				
		2	2, 6		56				
12									SUPPORT, Roof
	05104163AA	1	2, 6		11, 12, 14, 15, 16				
		1	2, 6		51, 52, 54, 55, 56				
		1	3, 7		12, 15, 16				
13									RAIL, Roof Side
	05104194AA	1	2, 6		51, 52, 54, 55, 56				Left
		1	3, 7		12, 15, 16				Left
	05104196AA	1	2, 6		11, 12, 14, 15, 16				Right
		1	2, 6		51, 52, 54, 55, 56				Right
		1	3, 7		12, 15, 16				Right
		1	2, 6		11, 12, 14, 15, 16				Left
14									RAIL, Roof Side
	05104191AA	1	2, 6		16				158 Inch Wheel Base
		1	2, 6		56				158 Inch Wheel Base
		1	3, 7		16				158 Inch Wheel Base
	05121827AA	1	2, 6		12, 15				140 Inch Wheel Base
		1	2, 6		52, 55				140 Inch Wheel Base

SPRINTER (VA)

SERIES	LINE	BODY	ENGINE	TRANSMISSION
L = LOWLINE	3 = HD DODGE 2WD 6 = Lt. Duty DODGE 4WD 2 = Med. Duty DODGE 2WD 7 = Med. Duty DODGE 4WD	55 = Wagon 140" 54 = Wagon 118" 52 = Wagon 140" 51 = Wagon 118" 12 = Van 140" 11 = Van 118" 06 = Front Section 158" 14 = Van 118" 15 = Van 140" 16 = Van 158" 56 = Wagon 158" 01 = Chassis Forward Control 118" 02 = Chassis Forward Control 140"	EX8 = Engine-2.7L I5 Mercedes Turbo Diesel	DGJ = Transmission-5-Spd. Automatic,W5A580

High Roof Panel
Figure SVA-1120

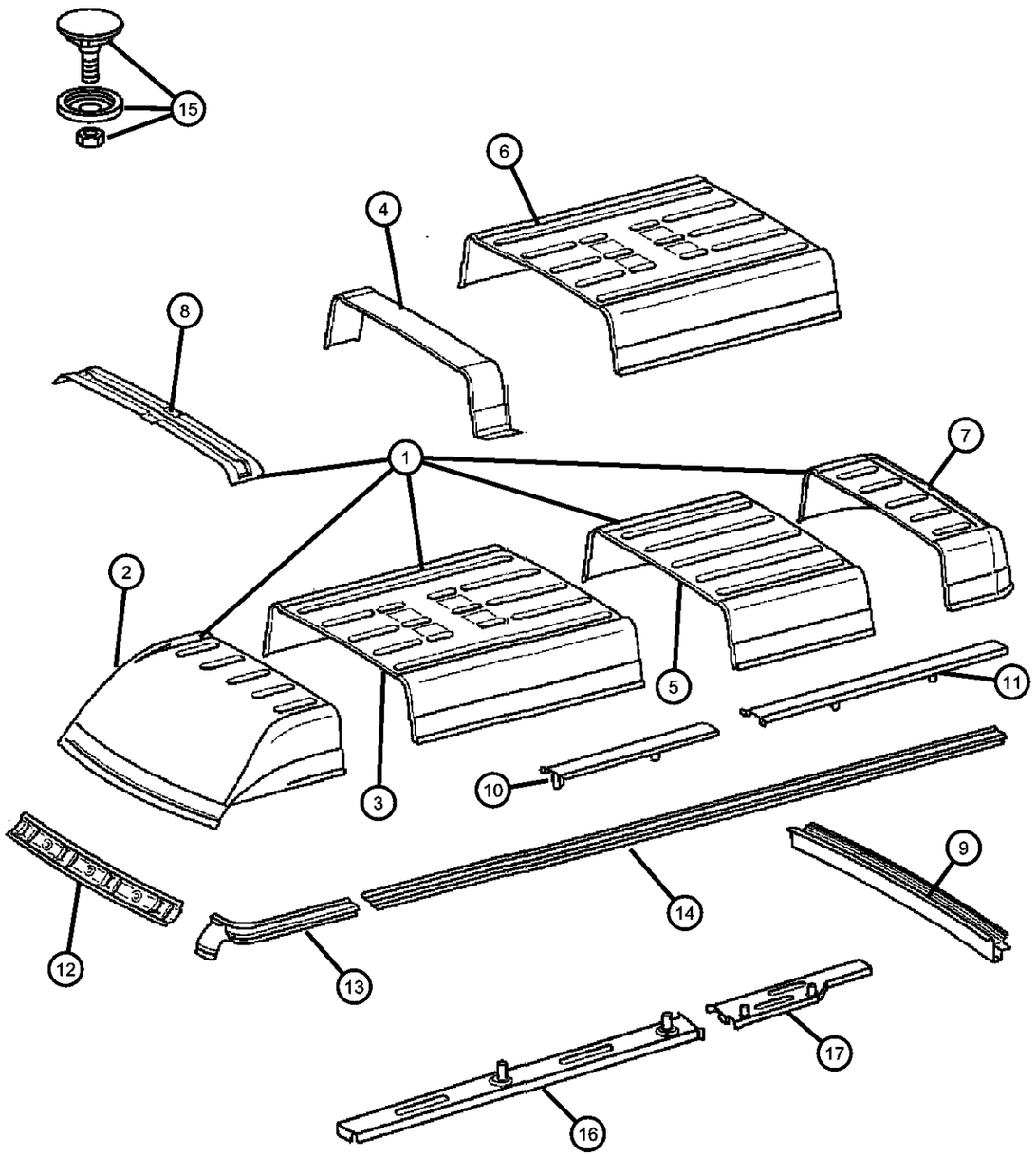

ITEM	PART NUMBER	QTY	LINE	SERIES	BODY	ENGINE	TRANS	TRIM	DESCRIPTION
		1	3, 7		12, 15				140 Inch Wheel Base
15									PANEL, For Sealing Antenna
	05124422AA	1	2, 6		51, 52, 54, 55, 56				
		1	3, 7		12, 15, 16				
		1	2, 6		15, 16, 11, 12, 14				
16									BRACKET, Roof
	05122086AA	1	2, 6		12, 15				
		1	2, 6		52, 55				
		1	3, 7		12, 15				
17									BRACKET, Roof
	05122089AA	1	2, 6		52, 55				Rear Right
		1	3, 7		12, 15				Rear Right
	05122088AA	1	2, 6		12, 15				Rear Left
		1	2, 6		52, 55				Rear Left
		1	3, 7		12, 15				Rear Left
		1	2, 6		12, 15				Rear Right

SPRINTER (VA)

SERIES	LINE	BODY	ENGINE	TRANSMISSION
L = LOWLINE	3 = HD DODGE 2WD 6 = Lt. Duty DODGE 4WD 2 = Med. Duty DODGE 2WD 7 = Med. Duty DODGE 4WD	55 = Wagon 140" 54 = Wagon 118" 52 = Wagon 140" 51 = Wagon 118" 12 = Van 140" 11 = Van 118" 06 = Front Section 158" 14 = Van 118" 15 = Van 140" 16 = Van 158" 56 = Wagon 158" 01 = Chassis Forward Control 118" 02 = Chassis Forward Control 140"	EX8 = Engine-2.7L I5 Mercedes Turbo Diesel	DGJ = Transmission-5-Spd. Automatic,W5A580

AR = use ase required - = Non illustrrated part

Manual Sunroof
Figure SVA-1210

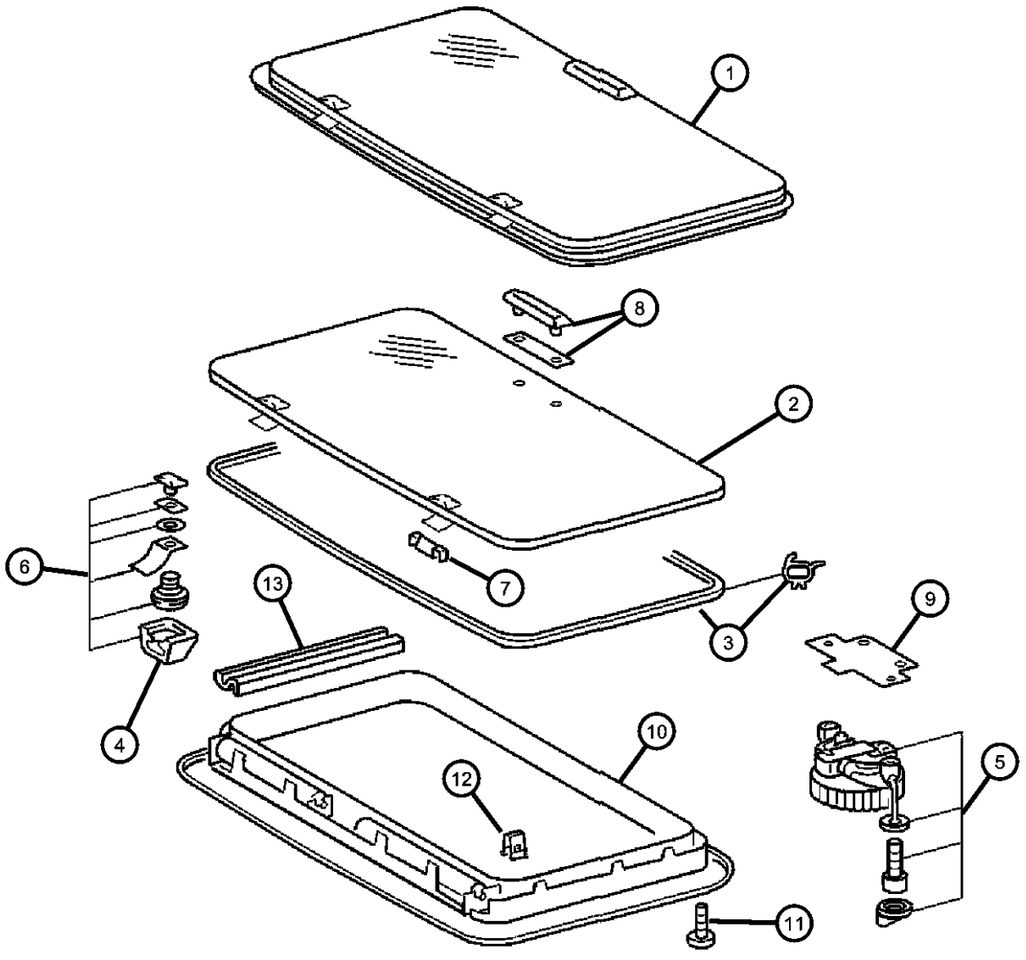

ITEM	PART NUMBER	QTY	LINE	SERIES	BODY	ENGINE	TRANS	TRIM	DESCRIPTION
1									SUNROOF, Complete
	05104476AA	1	2, 6		11, 12, 14, 15, 16				
		1	2, 6		51, 52, 54, 55, 56				
		1	3, 7		12, 15, 16				
2									GLASS, Sunroof
	05134005AA	1	2, 6		11, 12, 14, 15, 16				
		1	2, 6		51, 52, 54, 55, 56				
		1	3, 7		12, 15, 16				
3									SEAL, Sunroof
	05134006AA	1	2, 6		11, 12, 14, 15, 16				
		1	2, 6		51, 52, 54, 55, 56				
		1	3, 7		12, 15, 16				
4									COVER, Hinge
	05134007AA	1	3, 7		12, 15, 16				
		1	2, 6		11, 12, 14, 15, 16				
		1	2, 6		51, 52, 54, 55, 56				
5									HANDLE, Sunroof
	05134008AA	1	2, 6		11, 12, 14, 15, 16				
		1	2, 6		51, 52, 54, 55, 56				
		1	3, 7		12, 15, 16				
6									HINGE, Sunroof
	05134009AA	1	2, 6		11, 12, 14, 15, 16				
		1	2, 6		51, 52, 54, 55, 56				

SPRINTER (VA)

SERIES	LINE	BODY	ENGINE	TRANSMISSION
L = LOWLINE	3 = HD DODGE 2WD 6 = Lt. Duty DODGE 4WD 2 = Med. Duty DODGE 2WD 7 = Med. Duty DODGE 4WD	55 = Wagon 140" 54 = Wagon 118" 52 = Wagon 140" 51 = Wagon 118" 12 = Van 140" 11 = Van 118" 06 = Front Section 158" 14 = Van 118" 15 = Van 140" 16 = Van 158" 56 = Wagon 158" 01 = Chassis Forward Control 118" 02 = Chassis Forward Control 140"	EX8 = Engine-2.7L I5 Mercedes Turbo Diesel	DGJ = Transmission-5-Spd. Automatic,W5A580

Manual Sunroof
Figure SVA-1210

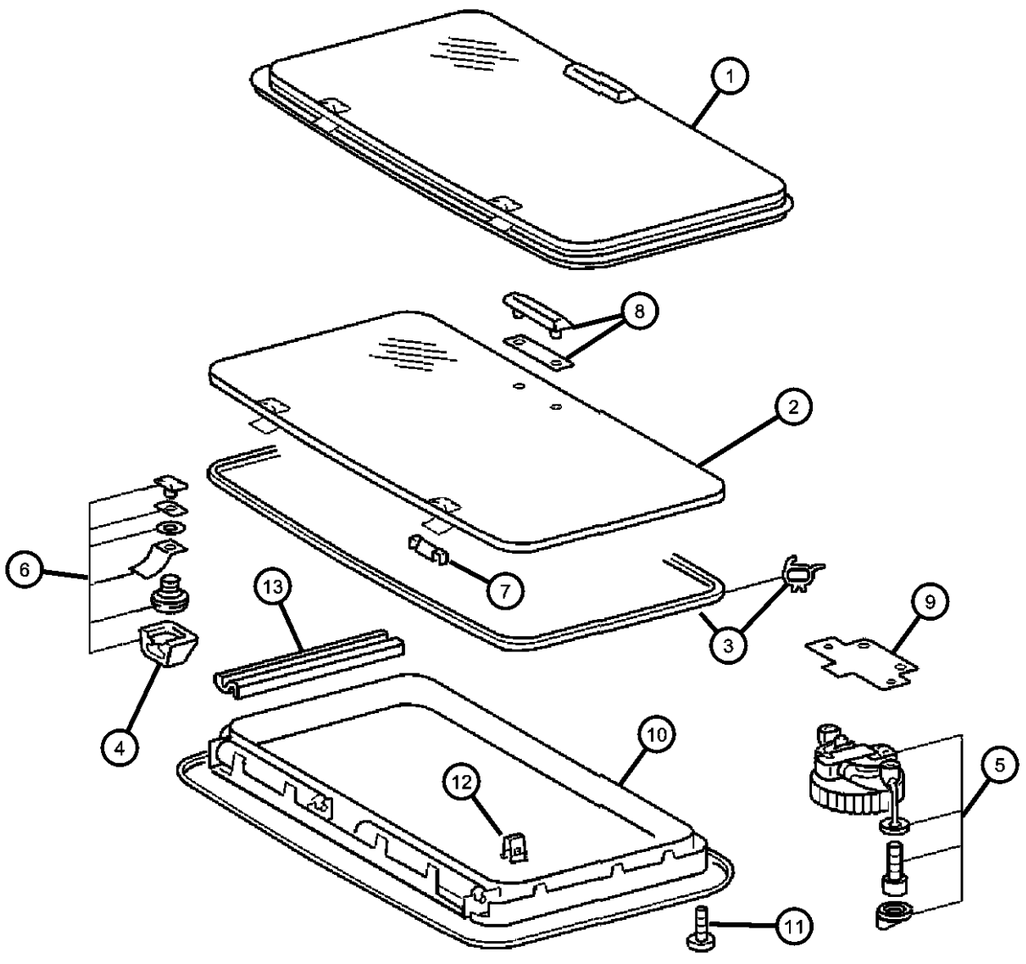

ITEM	PART NUMBER	QTY	LINE	SERIES	BODY	ENGINE	TRANS	TRIM	DESCRIPTION
		1	3, 7		12, 15, 16				
7									HINGE, Sunroof
	05134010AA	1	3, 7		12, 15, 16				
		1	2, 6		11, 12, 14, 15, 16				
		1	2, 6		51, 52, 54, 55, 56				
8									PLATE, Sunroof
	05134011AA	1	3, 7		12, 15, 16				
		1	2, 6		11, 12, 14, 15, 16				
		1	2, 6		51, 52, 54, 55, 56				
9									PLATE, Sunroof
	05134012AA	1	2, 6		51, 52, 54, 55, 56				
		1	3, 7		12, 15, 16				
		1	2, 6		11, 12, 14, 15, 16				
10									FRAME, Sunroof
	05124714AA	1	2, 6		11, 12, 14, 15, 16				
		1	2, 6		51, 52, 54, 55, 56				
		1	3, 7		12, 15, 16				
	05124715AA	1	2, 6		11, 12, 14, 15, 16				Without Double Shade
		1	2, 6		51, 52, 54, 55, 56				Without Double Shade
		1	3, 7		12, 15, 16				Without Double Shade
11									SCREW
	05126276AA	24	2, 6		11, 12, 14, 15				
		24	2, 6		11, 12, 14, 15, 16				

SPRINTER (VA)

SERIES	LINE	BODY	ENGINE	TRANSMISSION
L = LOWLINE	3 = HD DODGE 2WD 6 = Lt. Duty DODGE 4WD 2 = Med. Duty DODGE 2WD 7 = Med. Duty DODGE 4WD	55 = Wagon 140" 54 = Wagon 118" 52 = Wagon 140" 51 = Wagon 118" 12 = Van 140" 11 = Van 118" 06 = Front Section 158" 14 = Van 118" 15 = Van 140" 16 = Van 158" 56 = Wagon 158" 01 = Chassis Forward Control 118" 02 = Chassis Forward Control 140"	EX8 = Engine-2.7L I5 Mercedes Turbo Diesel	DGJ = Transmission-5-Spd. Automatic,W5A580

Manual Sunroof
Figure SVA-1210

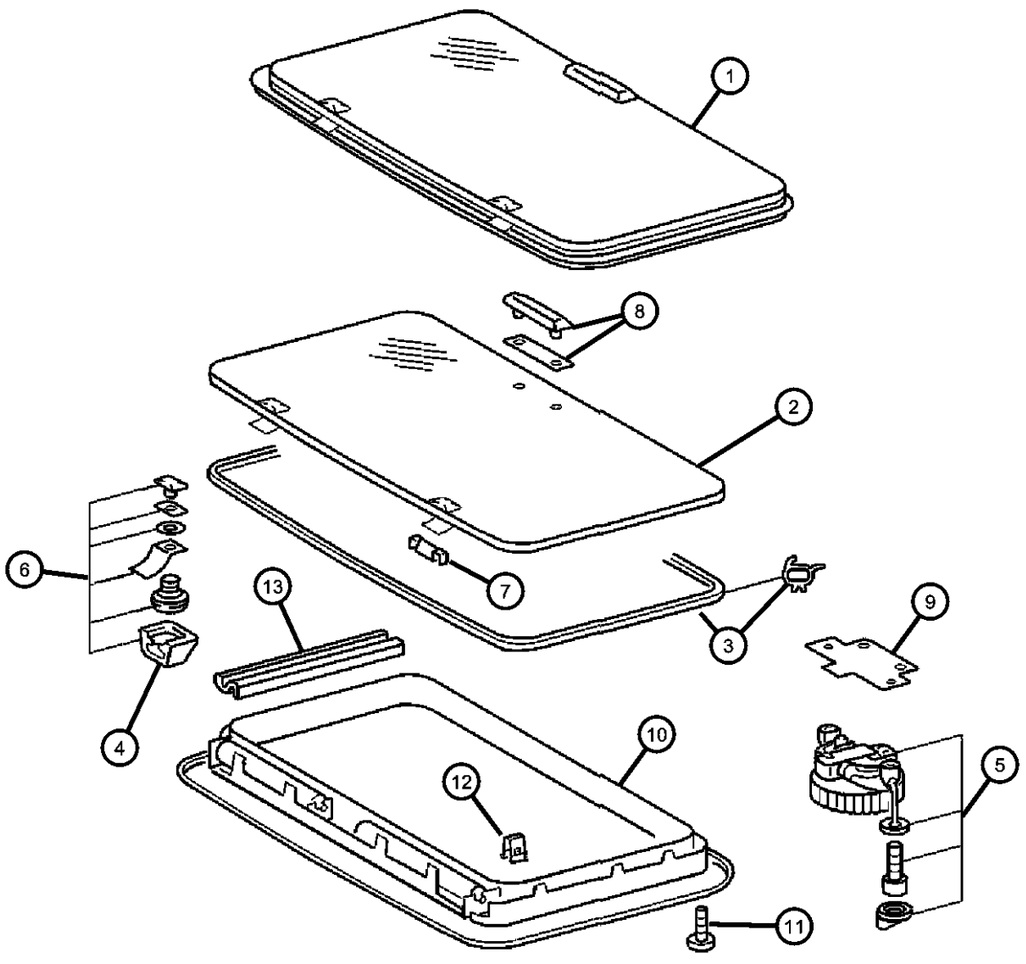

ITEM	PART NUMBER	QTY	LINE	SERIES	BODY	ENGINE	TRANS	TRIM	DESCRIPTION
		24	3, 7		12, 15, 16				
12									CLIP, Sunroof
	05125572AA	14	2, 6		11, 12, 14, 15, 16				
		14	2, 6		51, 52, 54, 55, 56				
		14	3, 7		12, 15, 16				
13									SUPPORT
	05104495AA	2	2, 6		11, 12, 14, 15, 16				
		2	2, 6		51, 52, 54, 55, 56				
		2	3, 7		12, 15, 16				

SPRINTER (VA)

SERIES	LINE	BODY	ENGINE	TRANSMISSION
L = LOWLINE	3 = HD DODGE 2WD 6 = Lt. Duty DODGE 4WD 2 = Med. Duty DODGE 2WD 7 = Med. Duty DODGE 4WD	55 = Wagon 140" 54 = Wagon 118" 52 = Wagon 140" 51 = Wagon 118" 12 = Van 140" 11 = Van 118" 06 = Front Section 158" 14 = Van 118" 15 = Van 140" 16 = Van 158" 56 = Wagon 158" 01 = Chassis Forward Control 118" 02 = Chassis Forward Control 140"	EX8 = Engine-2.7L I5 Mercedes Turbo Diesel	DGJ = Transmission-5-Spd. Automatic,W5A580

AR = use ase required - = Non illustrrated part

<< RETURN TO GROUP INDEX

Fixed Sunroof
Figure SVA-1220

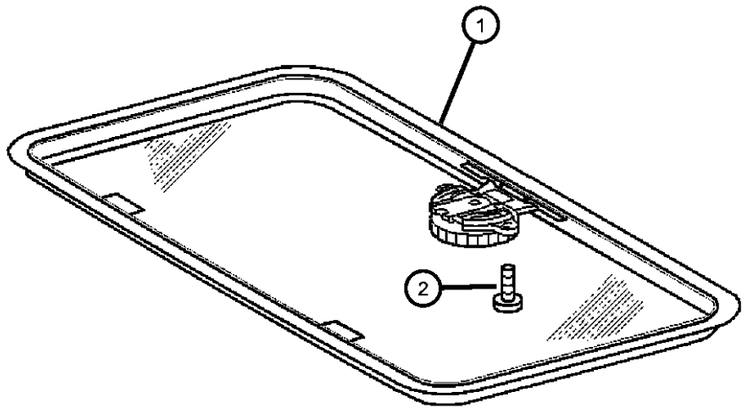

ITEM	PART NUMBER	QTY	LINE	SERIES	BODY	ENGINE	TRANS	TRIM	DESCRIPTION
1									GLASS, Sunroof
	05104480AA	1	2, 6		11, 12, 14, 15, 16				
		1	2, 6		51, 52, 54, 55, 56				
		1	3, 7		12, 15, 16				
2									SCREW
	05126276AA	24	2, 6		11, 12, 14, 15, 16				
		24	2, 6		51, 52, 54, 55, 56				
		24	3, 7		12, 15, 16				

SPRINTER (VA)

SERIES	LINE	BODY	ENGINE	TRANSMISSION
L = LOWLINE	3 = HD DODGE 2WD 6 = Lt. Duty DODGE 4WD 2 = Med. Duty DODGE 2WD 7 = Med. Duty DODGE 4WD	55 = Wagon 140" 54 = Wagon 118" 52 = Wagon 140" 51 = Wagon 118" 12 = Van 140" 11 = Van 118" 06 = Front Section 158" 14 = Van 118" 15 = Van 140" 16 = Van 158" 56 = Wagon 158" 01 = Chassis Forward Control 118" 02 = Chassis Forward Control 140"	EX8 = Engine-2.7L I5 Mercedes Turbo Diesel	DGJ = Transmission-5-Spd. Automatic,W5A580

Group - LBLS

Labels All Vehicle Locations

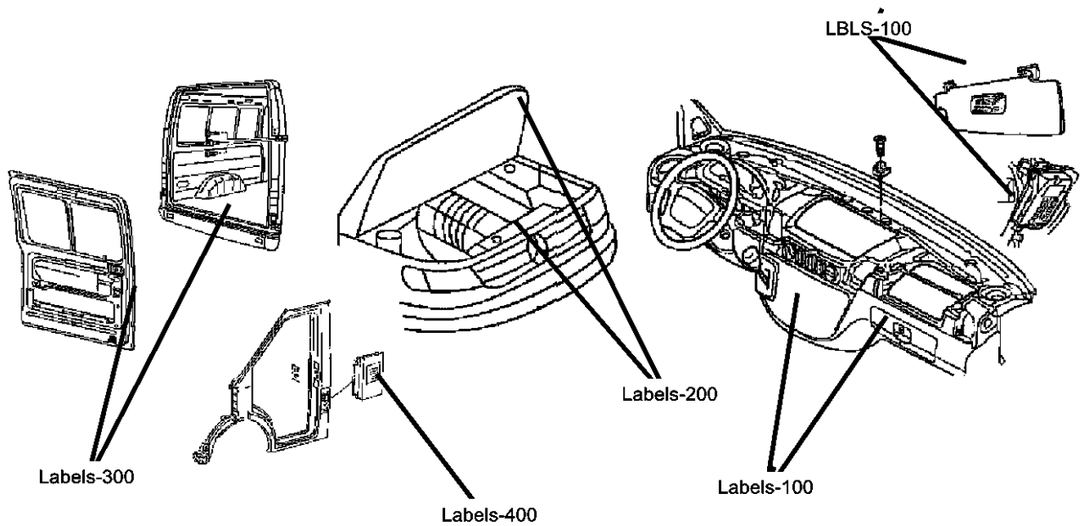

LBLS-100 Interior	LBLS-200 Under Hood	LBLS-300 Doors	LBLS-400 Exterior
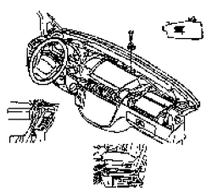		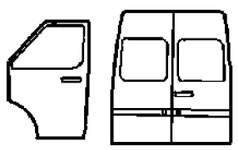	

Group - LBLS Labels All Vehicle Locations

Illustration Title — Group-Fig. No.

Interior
Instrument Panel / Visors & Interior ..... Fig. LBLS - 105

Under Hood
Engine Compartment ..... Fig. LBLS - 205

Doors
Front / Side & Cargo ..... Fig. LBLS - 305

Exterior
Fuel Door & Filler ..... Fig. LBLS - 410

Instrument Panel / Visors & Interior
Figure LBLS-105

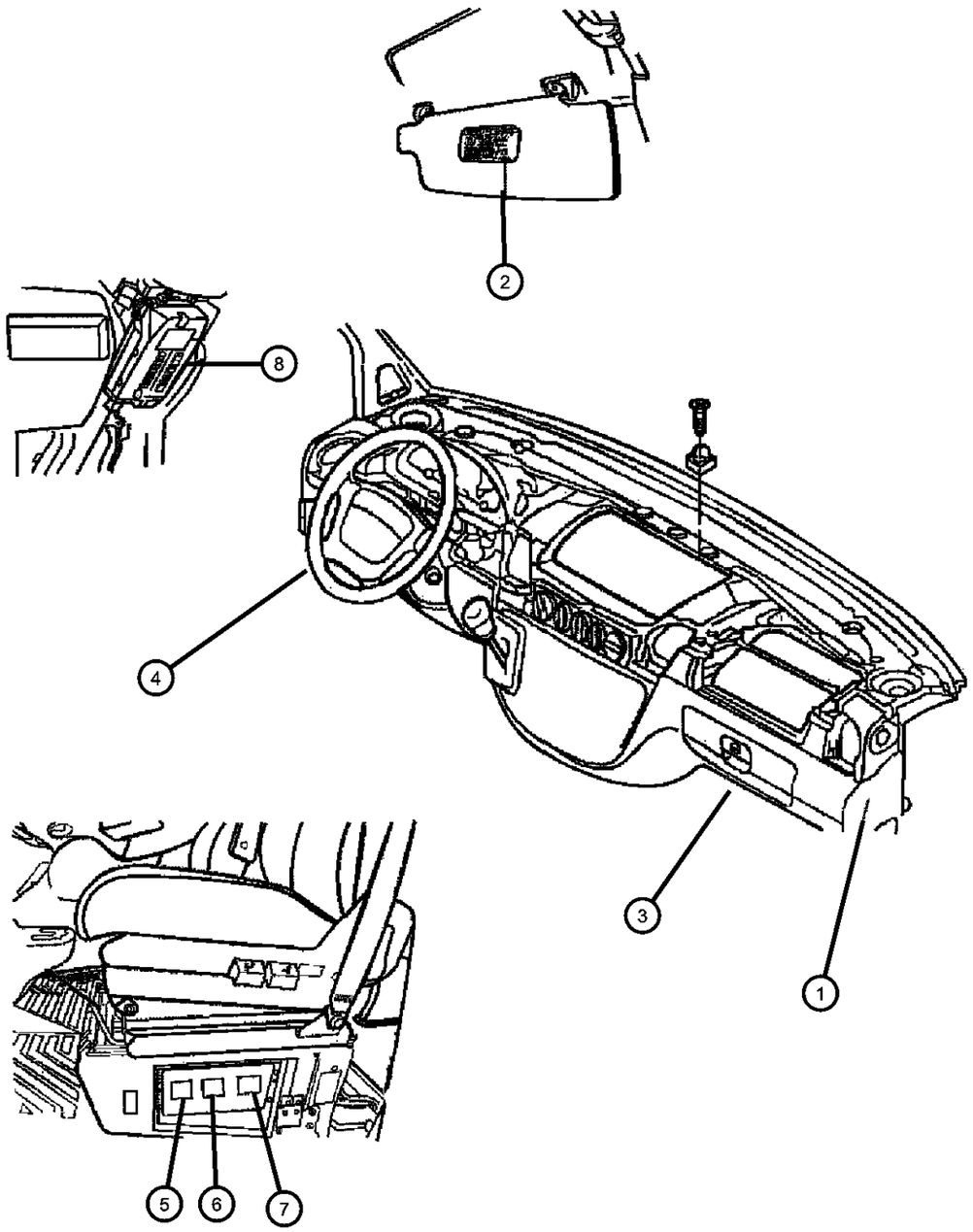

ITEM	PART NUMBER	QTY	LINE	SERIES	BODY	ENGINE	TRANS	TRIM	DESCRIPTION
1									LABEL, Airbag
	05096894AA	1		L	11, 12, 14, 15, 16				Round Sticker on I/P
		1		L	51, 52, 54, 55, 56				Round Sticker on I/P
		1		L	12, 15, 16				Round Sticker on I/P
		1		L	01, 02, 06				Round Sticker on I/P
2									LABEL, Airbag
	05121033AA	2		L	01, 02, 06				
		2		L	11, 12, 14, 15, 16				
		2		L	51, 52, 54, 55, 56				
		2		L	12, 15, 16				
3									LABEL, Airbag
	05124329AB	1		L	01, 02, 06				
	05124329AA	1		L	11, 12, 14, 15, 16				
		1		L	51, 52, 54, 55, 56				
		1		L	12, 15, 16				
4									LABEL, Warning
	05121112AA	1		L	11, 12, 14, 15, 16				Electrical Shock
		1		L	51, 52, 54, 55, 56				Electrical Shock
		1		L	12, 15, 16				Electrical Shock
5									LABEL, Fuse Block
	05121129AA	1		L	12, 15, 16				Under Driver Seat
		1		L	01, 02, 06				Under Driver Seat
		1		L	11, 12, 14, 15, 16				Under Driver Seat
		1		L	51, 52, 54, 55, 56				Under Driver Seat

SPRINTER (VA)

SERIES	LINE	BODY	ENGINE	TRANSMISSION
L = LOWLINE	3 = HD DODGE 2WD 6 = Lt. Duty DODGE 4WD 2 = Med. Duty DODGE 2WD 7 = Med. Duty DODGE 4WD	55 = Wagon 140" 54 = Wagon 118" 52 = Wagon 140" 51 = Wagon 118" 12 = Van 140" 11 = Van 118" 06 = Front Section 158" 14 = Van 118" 15 = Van 140" 16 = Van 158" 56 = Wagon 158" 01 = Chassis Forward Control 118" 02 = Chassis Forward Control 140"	EX8 = Engine-2.7L I5 Mercedes Turbo Diesel	DGJ = Transmission-5-Spd. Automatic,W5A580

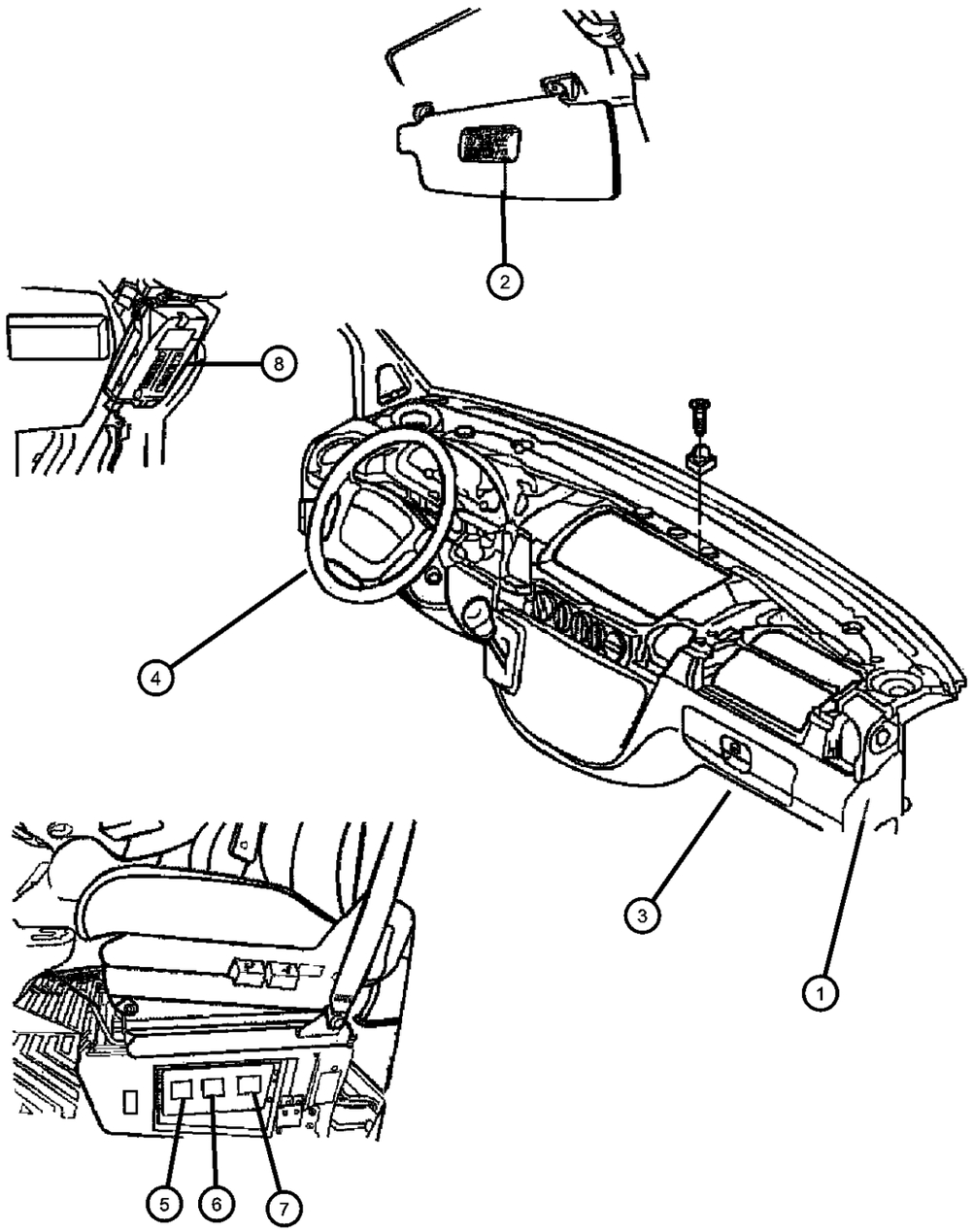

ITEM	PART NUMBER	QTY	LINE	SERIES	BODY	ENGINE	TRANS	TRIM	DESCRIPTION
6									LABEL
	05121077AA	1		L	01, 02, 06				No Water
	05121077AB	1		L	11, 12, 14, 15, 16				No Water
		1		L	51, 52, 54, 55, 56				No Water
		1		L	12, 15, 16				No Water
7									LABEL, Tire
	05121147AA	2		L	11, 12, 14, 15, 16				
		2		L	55, 56, 51, 52, 54				
		2		L	12, 15, 16				
		2		L	01, 02, 06				
8									LABEL
	05121032AA	1		L	01, 02, 06				
		1		L	11, 12, 14, 15, 16				
		1		L	51, 52, 54, 55, 56				
		1		L	12, 15, 16				

SPRINTER (VA)

SERIES	LINE	BODY	ENGINE	TRANSMISSION
L = LOWLINE	3 = HD DODGE 2WD 6 = Lt. Duty DODGE 4WD 2 = Med. Duty DODGE 2WD 7 = Med. Duty DODGE 4WD	55 = Wagon 140" 54 = Wagon 118" 52 = Wagon 140" 51 = Wagon 118" 12 = Van 140" 11 = Van 118" 06 = Front Section 158" 14 = Van 118" 15 = Van 140" 16 = Van 158" 56 = Wagon 158" 01 = Chassis Forward Control 118" 02 = Chassis Forward Control 140"	EX8 = Engine-2.7L I5 Mercedes Turbo Diesel	DGJ = Transmission-5-Spd. Automatic,W5A580

Engine Compartment
Figure LBLS-205

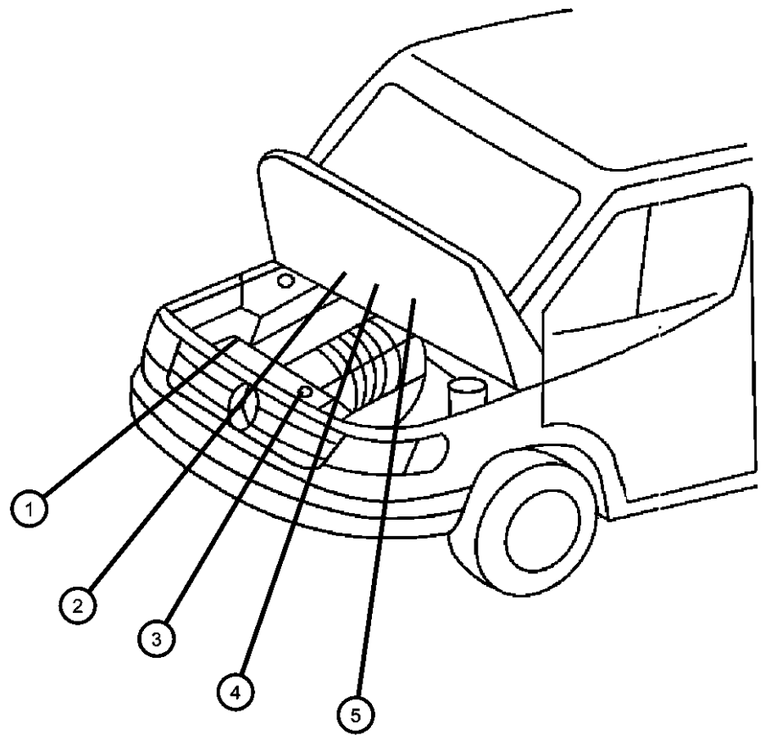

ITEM	PART NUMBER	QTY	LINE	SERIES	BODY	ENGINE	TRANS	TRIM	DESCRIPTION
1									LABEL, Fan Caution
	05104155AA	1		L	01, 02, 06				
		1		L	11, 12, 14, 15, 16				
		1		L	51, 52, 54, 55, 56				
		1		L	12, 15, 16				
2									LABEL, A/C Spec.
	05124359AA	1		L	01, 02, 06				
		1		L	11, 12, 14, 15, 16				
		1		L	51, 52, 54, 55, 56				
		1		L	12, 15, 16				
3									LABEL, Coolant Warning
	05104154AA	1		L	01, 02, 06				
		1		L	11, 12, 14, 15, 16				
		1		L	54, 55, 56, 51, 52				
		1		L	12, 15, 16				
4									LABEL, Adhesive Foil
	05121165AA	1		L	01, 02, 06				
		1		L	11, 12, 14, 15, 16				
		1		L	12, 15, 16				
		1		L	51, 52, 54, 55, 56				
5									LABEL, Tire Pressure
	05121159AA	1		L	14, 15, 16, 11, 12				
		1		L	51, 52, 54, 55, 56				

SPRINTER (VA)

SERIES	LINE	BODY	ENGINE	TRANSMISSION
L = LOWLINE	3 = HD DODGE 2WD 6 = Lt. Duty DODGE 4WD 2 = Med. Duty DODGE 2WD 7 = Med. Duty DODGE 4WD	55 = Wagon 140" 54 = Wagon 118" 52 = Wagon 140" 51 = Wagon 118" 12 = Van 140" 11 = Van 118" 06 = Front Section 158" 14 = Van 118" 15 = Van 140" 16 = Van 158" 56 = Wagon 158" 01 = Chassis Forward Control 118" 02 = Chassis Forward Control 140"	EX8 = Engine-2.7L I5 Mercedes Turbo Diesel	DGJ = Transmission-5-Spd. Automatic,W5A580

AR = use ase required - = Non illustrrated part

Engine Compartment
Figure LBLS-205

ITEM	PART NUMBER	QTY	LINE	SERIES	BODY	ENGINE	TRANS	TRIM	DESCRIPTION
		1		L	12, 15, 16				
		1		L	01, 02, 06				

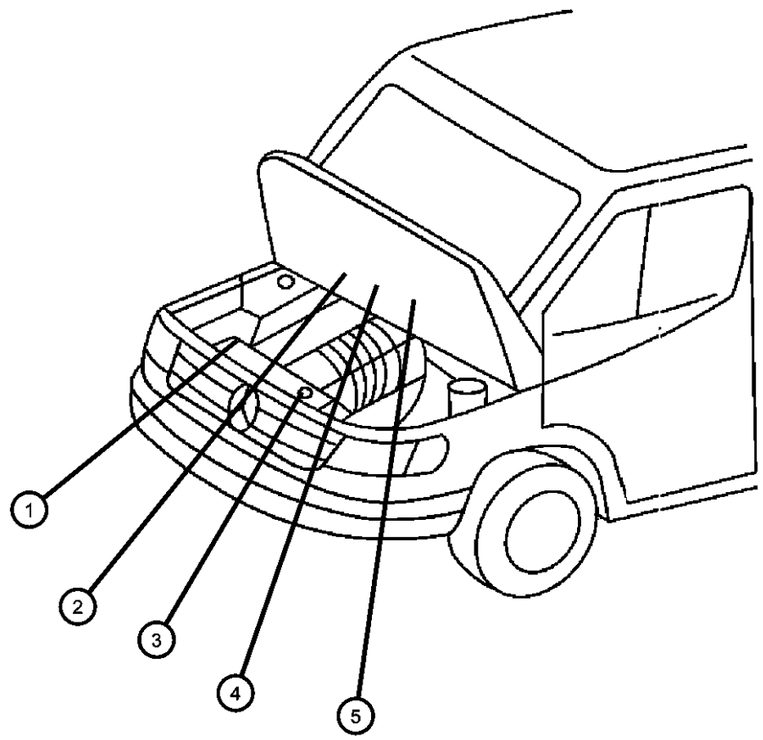

SPRINTER (VA)

SERIES	LINE	BODY	ENGINE	TRANSMISSION
L = LOWLINE	3 = HD DODGE 2WD 6 = Lt. Duty DODGE 4WD 2 = Med. Duty DODGE 2WD 7 = Med. Duty DODGE 4WD	55 = Wagon 140" 54 = Wagon 118" 52 = Wagon 140" 51 = Wagon 118" 12 = Van 140" 11 = Van 118" 06 = Front Section 158" 14 = Van 118" 15 = Van 140" 16 = Van 158" 56 = Wagon 158" 01 = Chassis Forward Control 118" 02 = Chassis Forward Control 140"	EX8 = Engine-2.7L I5 Mercedes Turbo Diesel	DGJ = Transmission-5-Spd. Automatic,W5A580

AR = use ase required - = Non illustrrated part

2004 VA

<< RETURN TO GROUP INDEX

Front / Side & Cargo
Figure LBLS-305

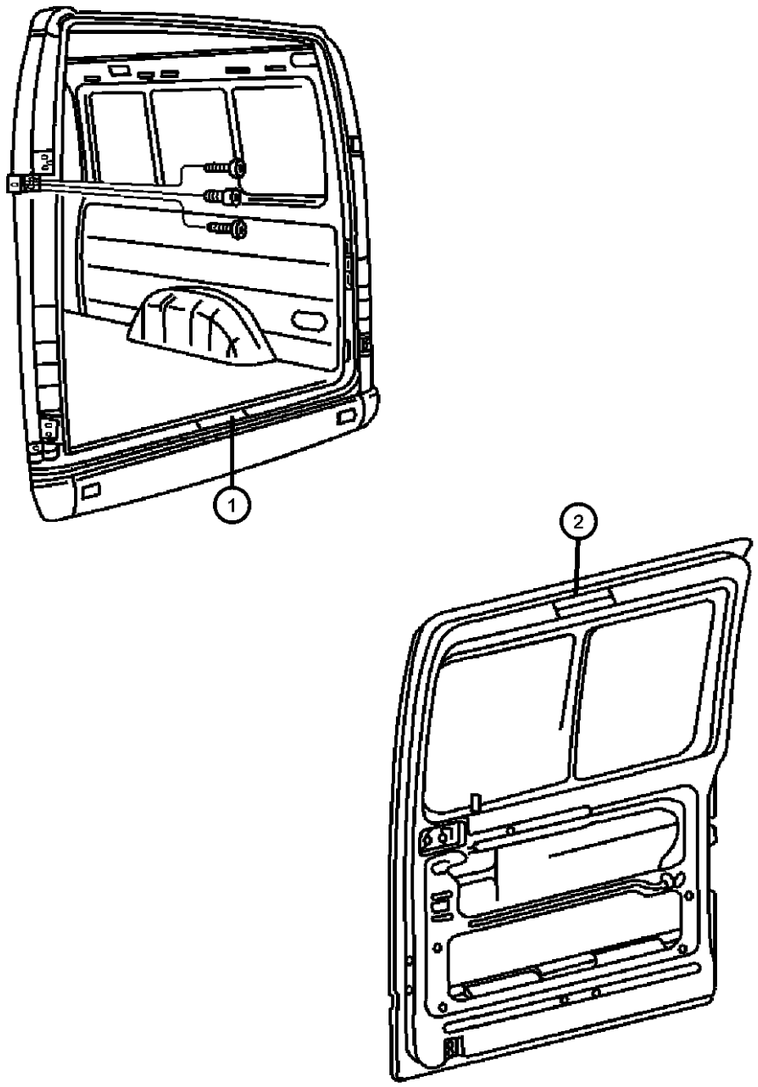

ITEM	PART NUMBER	QTY	LINE	SERIES	BODY	ENGINE	TRANS	TRIM	DESCRIPTION
1									LABEL
	05124356AA	1		L	12, 15, 16				
		1		L	12, 15, 16				Cargo Hold Down
2									LABEL, Warning
	05121112AA	1		L	01, 02, 06				
		1		L	11, 12, 14, 15, 16				
		1		L	51, 52, 54, 55, 56				Sliding Door

SPRINTER (VA)

SERIES	LINE	BODY	ENGINE	TRANSMISSION
L = LOWLINE	3 = HD DODGE 2WD 6 = Lt. Duty DODGE 4WD 2 = Med. Duty DODGE 2WD 7 = Med. Duty DODGE 4WD	55 = Wagon 140" 54 = Wagon 118" 52 = Wagon 140" 51 = Wagon 118" 12 = Van 140" 11 = Van 118" 06 = Front Section 158" 14 = Van 118" 15 = Van 140" 16 = Van 158" 56 = Wagon 158" 01 = Chassis Forward Control 118" 02 = Chassis Forward Control 140"	EX8 = Engine-2.7L I5 Mercedes Turbo Diesel	DGJ = Transmission-5-Spd. Automatic,W5A580

AR = use ase required - = Non illustrrated part

Fuel Door & Filler
Figure LBLS-410

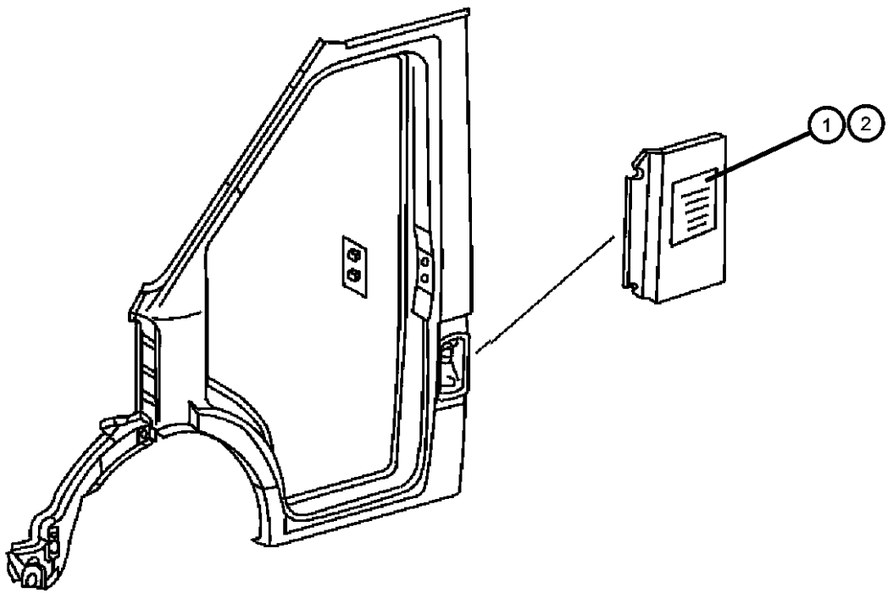

ITEM	PART NUMBER	QTY	LINE	SERIES	BODY	ENGINE	TRANS	TRIM	DESCRIPTION
1									LABEL, Fuel
	05104152AA	1		L	11, 12, 14, 15, 16				
		1		L	51, 52, 54, 55, 56				
		1		L	12, 15, 16				
2									LABEL, Diesel Fuel
	05104153AA	1		L	11, 12, 14, 15, 16	EX9			
		1		L	51, 52, 54, 55, 56	EX9			
		1		L	12, 15, 16	EX9			

SPRINTER (VA)

SERIES	LINE	BODY	ENGINE	TRANSMISSION
L = LOWLINE	3 = HD DODGE 2WD 6 = Lt. Duty DODGE 4WD 2 = Med. Duty DODGE 2WD 7 = Med. Duty DODGE 4WD	55 = Wagon 140" 54 = Wagon 118" 52 = Wagon 140" 51 = Wagon 118" 12 = Van 140" 11 = Van 118" 06 = Front Section 158" 14 = Van 118" 15 = Van 140" 16 = Van 158" 56 = Wagon 158" 01 = Chassis Forward Control 118" 02 = Chassis Forward Control 140"	EX8 = Engine-2.7L I5 Mercedes Turbo Diesel	DGJ = Transmission-5-Spd. Automatic,W5A580